Federal Register

7–15–08 Tuesday
Vol. 73 No. 136 July 15, 2008

Pages 40453–40714

The **FEDERAL REGISTER** (ISSN 0097–6326) is published daily, Monday through Friday, except official holidays, by the Office of the Federal Register, National Archives and Records Administration, Washington, DC 20408, under the Federal Register Act (44 U.S.C. Ch. 15) and the regulations of the Administrative Committee of the Federal Register (1 CFR Ch. I). The Superintendent of Documents, U.S. Government Printing Office, Washington, DC 20402 is the exclusive distributor of the official edition. Periodicals postage is paid at Washington, DC.

The **FEDERAL REGISTER** provides a uniform system for making available to the public regulations and legal notices issued by Federal agencies. These include Presidential proclamations and Executive Orders, Federal agency documents having general applicability and legal effect, documents required to be published by act of Congress, and other Federal agency documents of public interest.

Documents are on file for public inspection in the Office of the Federal Register the day before they are published, unless the issuing agency requests earlier filing. For a list of documents currently on file for public inspection, see *www.federalregister.gov.*

The seal of the National Archives and Records Administration authenticates the Federal Register as the official serial publication established under the Federal Register Act. Under 44 U.S.C. 1507, the contents of the **Federal Register** shall be judicially noticed.

The **Federal Register** is published in paper and on 24x microfiche. It is also available online at no charge as one of the databases on GPO Access, a service of the U.S. Government Printing Office.

The online edition of the **Federal Register** *www.gpoaccess.gov/nara,* available through GPO Access, is issued under the authority of the Administrative Committee of the Federal Register as the official legal equivalent of the paper and microfiche editions (44 U.S.C. 4101 and 1 CFR 5.10). It is updated by 6 a.m. each day the **Federal Register** is published and includes both text and graphics from Volume 59, Number 1 (January 2, 1994) forward.

For more information about GPO Access, contact the GPO Access User Support Team, call toll free 1-888-293-6498; DC area 202-512-1530; fax at 202-512-1262; or via e-mail at *gpoaccess@gpo.gov.* The Support Team is available between 7:00 a.m. and 9:00 p.m. Eastern Time, Monday–Friday, except official holidays.

The annual subscription price for the **Federal Register** paper edition is $749 plus postage, or $808, plus postage, for a combined **Federal Register, Federal Register** Index and List of CFR Sections Affected (LSA) subscription; the microfiche edition of the **Federal Register** including the **Federal Register** Index and LSA is $165, plus postage. Six month subscriptions are available for one-half the annual rate. The prevailing postal rates will be applied to orders according to the delivery method requested. The price of a single copy of the daily **Federal Register,** including postage, is based on the number of pages: $11 for an issue containing less than 200 pages; $22 for an issue containing 200 to 400 pages; and $33 for an issue containing more than 400 pages. Single issues of the microfiche edition may be purchased for $3 per copy, including postage. Remit check or money order, made payable to the Superintendent of Documents, or charge to your GPO Deposit Account, VISA, MasterCard, American Express, or Discover. Mail to: U.S. Government Printing Office—New Orders, P.O. Box 979050, St. Louis, MO 63197-9000; or call toll free 1-866-512-1800, DC area 202-512-1800; or go to the U.S. Government Online Bookstore site, see *bookstore.gpo.gov.*

There are no restrictions on the republication of material appearing in the **Federal Register.**

How To Cite This Publication: Use the volume number and the page number. Example: 73 FR 12345.

Postmaster: Send address changes to the Superintendent of Documents, Federal Register, U.S. Government Printing Office, Washington, DC 20402, along with the entire mailing label from the last issue received.

SUBSCRIPTIONS AND COPIES

PUBLIC

Subscriptions:

Paper or fiche	**202–512–1800**
Assistance with public subscriptions	**202–512–1806**

General online information **202–512–1530; 1–888–293–6498**

Single copies/back copies:

Paper or fiche	**202–512–1800**
Assistance with public single copies	**1–866–512–1800 (Toll-Free)**

FEDERAL AGENCIES

Subscriptions:

Paper or fiche	**202–741–6005**
Assistance with Federal agency subscriptions	**202–741–6005**

FEDERAL REGISTER WORKSHOP

THE FEDERAL REGISTER: WHAT IT IS AND HOW TO USE IT

FOR: Any person who uses the Federal Register and Code of Federal Regulations.

WHO: Sponsored by the Office of the Federal Register.

WHAT: Free public briefings (approximately 3 hours) to present:

1. The regulatory process, with a focus on the Federal Register system and the public's role in the development of regulations.

2. The relationship between the Federal Register and Code of Federal Regulations.

3. The important elements of typical Federal Register documents.

4. An introduction to the finding aids of the FR/CFR system.

WHY: To provide the public with access to information necessary to research Federal agency regulations which directly affect them. There will be no discussion of specific agency regulations.

WHEN: Tuesday, August 12, 2008
9:00 a.m.–12:30 p.m.

WHERE: Office of the Federal Register
Conference Room, Suite 700
800 North Capitol Street, NW.
Washington, DC 20002

RESERVATIONS: (202) 741–6008

Printed on recycled paper.

Contents

Federal Register

Vol. 73, No. 136

Tuesday, July 15, 2008

Agriculture Department
NOTICES
Agency Information Collection Activities; Proposals, Submissions, and Approvals, 40479

Alcohol and Tobacco Tax and Trade Bureau
PROPOSED RULES
Proposed Expansion of the Paso Robles Viticultural Area (2008R-073P), 40474–40478

Broadcasting Board of Governors
NOTICES
Meetings; Sunshine Act, 40480

Centers for Disease Control and Prevention
NOTICES
Meetings:
National Institute for Occupational Safety and Health, 40582

Commerce Department
See International Trade Administration
See National Institute of Standards and Technology
See National Oceanic and Atmospheric Administration

Copyright Royalty Board, Library of Congress
NOTICES
Distribution of the 2004 and 2005 Cable Royalty Funds, 40623–40624

Corporation for National and Community Service
NOTICES
Agency Information Collection Activities; Proposals, Submissions, and Approvals, 40538–40539

Drug Enforcement Administration
RULES
Redelegation of Functions, 40463–40464

Education Department
NOTICES
Agency Information Collection Activities; Proposals, Submissions, and Approvals, 40539–40541
Office of Special Education and Rehabilitative Services:
Disability and Rehabilitation Research Projects and Centers Program; Technologies for Successful Aging With Disability, 40541–40545
Rehabilitation Engineering Research Centers; Technologies for Successful Aging With Disability, 40545–40548
Technical Assistance and Dissemination to Improve Services and Results for Children with Disabilities, 40548–40556

Employment and Training Administration
NOTICES
Amended Certification Regarding Eligibility to Apply for Worker Adjustment Assistance and Alternative Trade Adjustment Assistance:
Best: Artex LLC, Currently Known as Best Textiles International Ltd., Highland, IL, 40617
Carrier Access Corporation, Currently Known As Turin Networks, Boulder, CO, 40617–40618
Delphi Corp. et al., Vandalia, OH, 40618
Delphi Corporation Automotive Holdings Group et al., Moraine, OH, 40618
Determinations Regarding Eligibility to Apply for Worker Adjustment Assistance and Alternative Trade Adjustment Assistance, 40618–40620
Negative Determination on Reconsideration:
Norcal Pottery Products, Richmond, CA, 40621
Negative Determination Regarding Application for Reconsideration:
Gramercy Jewelry Manufacturing Corporation, New York, NY, 40621–40622
Request for Certification of Compliance:
Rural Industrialization Loan and Grant Program, 40622
Revised Determination on Reconsideration:
Bolton Metal Products Co. et al., Bellefonte, PA, 40622
Termination of Investigation:
Excello Engineered Systems, Macedonia, OH, 40623
Holophane, Newark, OH, 40623

Energy Department
See Federal Energy Regulatory Commission
NOTICES
Meetings:
2008 Department of Energy Nuclear Suppliers Outreach Meeting, 40557
State Energy Advisory Board; Teleconference, 40557

Environmental Protection Agency
RULES
Deletion Withdrawal:
National Oil and Hazardous Substance Pollution Contingency Plan; National Priorities List, 40467
National Oil and Hazardous Substance Pollution Contingency Plan; National Priorities List, 40467–40468
PROPOSED RULES
Approval and Promulgation of Implementation Plans:
Texas; Control of Emissions of Nitrogen Oxides from Stationary Sources, E8–15814, [**Editorial Note:** This document appearing at 73 FR 39900 in the **Federal Register** of July 11, 2008, was incorrectly indexed in that issue's Table of Contents.]
NOTICES
Agency Information Collection Activities; Proposals, Submissions, and Approvals, 40575–40576
Meetings:
Science Advisory Board Particulate Matter Research Centers Program Advisory Panel, 40576–40577
Receipt of Petition and Tentative Affirmative Determination:
New York State Prohibition of Marine Discharges of Vessel Sewage, 40577–40579

Federal Aviation Administration
NOTICES
Policy Revisions and Requests for Comments:
Percentage of Fabrication and Assembly that Must be Completed by an Amateur Builder to Obtain an Experimental Airworthiness Certificate, etc., 40652–40654

Federal Emergency Management Agency
RULES
Suspension of Community Eligibility, 40468–40470
NOTICES
Meetings:
National Advisory Council, 40592–40593

Federal Energy Regulatory Commission
NOTICES
Applications:
Public Service Company of Colorado, 40558–40560
Union Electric Co., dba AmerenUE, 40560
Wellesley Rosewood Maynard Mills LP, 40560–40561
Combined Notice of Filings, 40561–40574
Environmental Impact Statements; Availability, etc.:
Central Nebraska Public Power and Irrigation District, 40574
Filings:
Starwood Energy Group Global, L.L.C., 40574
TexMex Energy, LLC, 40574–40575

Federal Housing Enterprise Oversight Office
RULES
Risk-Based Capital Regulation; Loss Severity Amendments; Correction, 40656

Federal Maritime Commission
NOTICES
Meetings, 40579

Federal Railroad Administration
NOTICES
Petition for Approval; Railroad Safety Program Plan, 40654
Petition for Waiver of Compliance, 40654–40655

Federal Reserve System
NOTICES
Meetings; Sunshine Act, 40579–40580
Proposals to Engage in Permissible Nonbanking Activities or to Acquire Companies that are Engaged in Permissible Nonbanking Activities, 40580

Federal Trade Commission
NOTICES
Agency Information Collection Activities; Proposals, Submissions, and Approvals, 40580–40582

Food and Drug Administration
RULES
Current Good Manufacturing Practice and Investigational New Drugs Intended for Use in Clinical Trials, 40453–40463
NOTICES
Determination:
SANOREX (Mazindol) Tablets 1 and 2 Milligrams Were Not Withdrawn From Sale for Reasons of Safety or Effectiveness, 40582–40583
Global Harmonization Task Force, Study Groups 1 and 3 Proposed and Final Documents; Availability, 40583–40584
Guidance for Industry:
Current Good Manufacturing Practice for Phase 1 Investigational Drugs; Availability, 40584–40585

Health and Human Services Department
See Centers for Disease Control and Prevention
See Food and Drug Administration
See National Institutes of Health

Homeland Security Department
See Federal Emergency Management Agency
See U.S. Citizenship and Immigration Services
See U.S. Customs and Border Protection
NOTICES
Agency Information Collection Activities; Proposals, Submissions, and Approvals, 40588–40589
Published Privacy Impact Assessments on the Web, 40589–40592

Housing and Urban Development Department
See Federal Housing Enterprise Oversight Office
NOTICES
Agency Information Collection Activities; Proposals, Submissions, and Approvals, 40594–40595
Meetings:
Manufactured Housing Consensus Committee, 40595

Indian Affairs Bureau
NOTICES
Privacy Act; Systems of Records, 40595–40613

Interior Department
See Indian Affairs Bureau
See Land Management Bureau
See National Park Service

Internal Revenue Service
PROPOSED RULES
Postponement of Certain Tax-related Deadlines by Reason of Presidentially Declared Disaster or Terroristic or Military Actions, 40471–40474

International Trade Administration
NOTICES
Extension of Time Limit for Final Results of the Antidumping Duty Administrative Review:
Glycine from the People's Republic of China, 40480
Final Affirmative Countervailing Duty Determination and Final Negative Determination of Critical Circumstances:
Certain New Pneumatic Off-the-Road Tires from the People's Republic of China, 40480–40485
Final Affirmative Determination of Sales at Less Than Fair Value, etc.:
Certain New Pneumatic Off-The-Road Tires from China, 40485–40492
Final Results and Partial Rescission of Antidumping Duty Administrative Review:
Certain Frozen Warmwater Shrimp from India, 40492–40499
Rescission of Administrative Review:
Polyethylene Retail Carrier Bags from Malaysia, 40499–40500

International Trade Commission
NOTICES
Investigations:
Certain Short Wavelength Semiconductor Lasers and Products Containing Same, 40615
Meetings; Sunshine Act, 40615–40616

Justice Department
See Drug Enforcement Administration
NOTICES
Consent Decrees:
Bristol-Myers Squibb Co., 40616–40617
Waste Management of Illinois, Inc. et al., 40617

Labor Department
See Employment and Training Administration

Land Management Bureau
NOTICES
Realty Action:
Application for Conveyance of Federal Mineral Interests, Maricopa County, AZ., 40613
Resource Management Plan and Environmental Assessment:
Kingman Resource Area, AZ, 40613–40614

Library of Congress
See Copyright Royalty Board, Library of Congress

National Archives and Records Administration
NOTICES
Records Schedules; Availability and Request for Comments, 40624–40626

National Institute for Literacy
NOTICES
Meetings:
National Institute for Literacy Advisory Board, 40626

National Institute of Standards and Technology
NOTICES
Alternative Personnel Management System; Modifications, 40500–40502
Request for Nominations to Serve on National Institute of Standards and Technology Federal Advisory Committees, 40502–40507
Technology Innovation Program:
Availability of Funds and Announcement of Public Meetings, 40507–40511

National Institutes of Health
NOTICES
Government-Owned Inventions; Availability for Licensing, 40585–40588
Meetings:
National Cancer Institute, 40588

National Oceanic and Atmospheric Administration
RULES
Atlantic Highly Migratory Species (HMS):
Atlantic Shark Management Measures; Republication, 40658–40713
NOTICES
Meetings:
Gulf of Mexico Fishery Management Council, 40511–40512
Pacific Fishery Management Council, 40512
Small Takes of Marine Mammals Incidental to Specified Activities:
Ocean Bottom Cable Seismic Survey in the Liberty Prospect, Beaufort Sea, AK (2008), 40512–40538

National Park Service
NOTICES
General Management Plan; Environmental Impact Statement:
Golden Spike National Historic Site, UT, 40614–40615

National Science Foundation
NOTICES
Permits Issued Under the Antarctic Conservation Act, 40626

Nuclear Regulatory Commission
NOTICES
Confirmatory Order Modifying License (Effective Immediately):
Chevron Environmental Management Co.; Washington, PA Decommissioning Project Site, 40626–40628
Facility Operating Licenses Involving No Significant Hazards Considerations; Biweekly Notice, 40629–40638
Meetings; Sunshine Act, 40638–40639

Office of Federal Housing Enterprise Oversight
See Federal Housing Enterprise Oversight Office

Pension Benefit Guaranty Corporation
RULES
Benefits Payable in Terminated Single-Employer Plans; Allocation of Assets in Single Employer Plans; Interest Assumptions for Valuing and Paying Benefits, 40464–40465

Securities and Exchange Commission
NOTICES
Applications:
ING Clarion Real Estate Income Fund, et al., 40639–40643
Meetings; Sunshine Act, 40643
Self-Regulatory Organizations; Proposed Rule Changes:
American Stock Exchange LLC, New York Stock Exchange LLC, and NYSE Arca, Inc., 40643–40645
Chicago Board Options Exchange, Inc., 40645–40647
Financial Industry Regulatory Authority, Inc., 40647–40648

Small Business Administration
NOTICES
Disaster Declarations:
Indiana, 40648–40649
West Virginia, 40649

State Department
NOTICES
Privacy Act; Systems of Records, 40649–40652

Transportation Department
See Federal Aviation Administration
See Federal Railroad Administration

Treasury Department
See Alcohol and Tobacco Tax and Trade Bureau
See Internal Revenue Service

U.S. Citizenship and Immigration Services
NOTICES
Agency Information Collection Activities; Proposals, Submissions, and Approvals, 40593

U.S. Customs and Border Protection
NOTICES
Agency Information Collection Activities; Proposals, Submissions, and Approvals, 40593–40594

Veterans Affairs Department
RULES
Eligibility Reporting Requirements, 40465–40467

Separate Parts In This Issue

Part II

Commerce Department, National Oceanic and Atmospheric Administration, 40658–40713

Reader Aids

Consult the Reader Aids section at the end of this issue for phone numbers, online resources, finding aids, reminders, and notice of recently enacted public laws.

To subscribe to the Federal Register Table of Contents LISTSERV electronic mailing list, go to http://listserv.access.gpo.gov and select Online mailing list archives, FEDREGTOC-L, Join or leave the list (or change settings); then follow the instructions.

CFR PARTS AFFECTED IN THIS ISSUE

A cumulative list of the parts affected this month can be found in the Reader Aids section at the end of this issue.

12 CFR
1750.....40658

21 CFR
210.....40453

26 CFR
Proposed Rules:
301.....40471

27 CFR
Proposed Rules:
9.....40474

28 CFR
0.....40463

29 CFR
4022.....40464
4044.....40464

38 CFR
3.....40465

40 CFR
300 (2 documents) 40467

44 CFR
64.....40468

50 CFR
600.....40658
635.....40658

Rules and Regulations

Federal Register
Vol. 73, No. 136
Tuesday, July 15, 2008

This section of the FEDERAL REGISTER contains regulatory documents having general applicability and legal effect, most of which are keyed to and codified in the Code of Federal Regulations, which is published under 50 titles pursuant to 44 U.S.C. 1510.

The Code of Federal Regulations is sold by the Superintendent of Documents. Prices of new books are listed in the first FEDERAL REGISTER issue of each week.

DEPARTMENT OF HEALTH AND HUMAN SERVICES

Food and Drug Administration

21 CFR Part 210

[Docket No. FDA–2005–N–0170] (formerly Docket No. 2005N–0285)

Current Good Manufacturing Practice and Investigational New Drugs Intended for Use in Clinical Trials

AGENCY: Food and Drug Administration, HHS.

ACTION: Final rule.

SUMMARY: The Food and Drug Administration (FDA) is amending the current good manufacturing practice (CGMP) regulations for human drugs, including biological products, to exempt most phase 1 investigational drugs from complying with the regulatory CGMP requirements. FDA will continue to exercise oversight of the manufacture of these drugs under FDA's general statutory CGMP authority and through review of the investigational new drug applications (IND).

In addition, elsewhere in this issue of the **Federal Register**, FDA is announcing the availability of a guidance document entitled ''Guidance for Industry: CGMP for Phase 1 Investigational Drugs'' dated November 2007 (the companion guidance). This guidance document sets forth recommendations on approaches to compliance with statutory CGMP for the exempted phase 1 investigational drugs.

FDA is taking this action to focus a manufacturer's effort on applying CGMP that is appropriate and meaningful for the manufacture of the earliest stage investigational drug products intended for use in phase 1 clinical trials while ensuring safety and quality. This action will also streamline and promote the drug development process.

DATES: This rule is effective September 15, 2008.

FOR FURTHER INFORMATION CONTACT: Monica Caphart, Center for Drug Evaluation and Research (HFD–320), Food and Drug Administration, 10903 New Hampshire Ave., Silver Spring, MD 20993, 301–796–3248, or

Christopher Joneckis, Center for Biologics Evaluation and Research (HFM–1), Food and Drug Administration, 1401 Rockville Pike, Rockville, MD 20852, 301–827–5000.

SUPPLEMENTARY INFORMATION:

I. Rulemaking Procedure

In the **Federal Register** of January 17, 2006 (71 FR 2458), FDA published a direct final rule to amend § 210.2 (21 CFR 210.2) to exempt most phase 1 investigational drugs from complying with the CGMP requirements in parts 210 and 211 (21 CFR parts 210 and 211). We explained that we issued this rule as a direct final rule because we believed it was non-controversial and that there was little likelihood of receiving significant adverse comments. We concurrently published in the **Federal Register** of January 17, 2006 (71 FR 2494) a companion proposed rule, identical in substance to the direct final rule, that provided a procedural framework from which to proceed with standard notice-and-comment rulemaking in the event we were required to withdraw the direct final rule because of significant adverse comments. A significant adverse comment is defined as a comment that explains why the rule would be inappropriate, including challenges to the rule's underlying premise or approach, or would be ineffective or unacceptable without change. Any comments received under the companion proposed rule were treated as comments regarding the direct final rule and vice versa. A full description of FDA's policy on direct final rule procedures may be found in a guidance document published in the **Federal Register** of November 21, 1997 (62 FR 62466).

We received 14 comments on the proposed rule, of which several were considered to be significant adverse comments. Therefore, in the **Federal Register** of May 2, 2006 (71 FR 25747), we withdrew the direct final rule. This final rule summarizes and responds to the comments received on the direct final rule and proposed rule. See section V of this document for a discussion of the comments and FDA's responses.

Together with the companion guidance, this final rule will assist the drug development process by streamlining the application of CGMP that is more appropriate to the manufacture of the earliest stage investigational drug products—those intended for use in phase 1 clinical trials.

II. Background

A phase 1 clinical trial includes the initial introduction of an investigational new drug product, including biological drug products, into humans. Such studies are conducted to establish the basic safety of the drug, and are designed to determine the metabolism and pharmacologic actions of the drug in humans. The total number of subjects in a phase 1 clinical trial is limited generally to no more than 80 subjects. This is in contrast to phase 2 and phase 3 clinical trials when a substantially greater number of subjects are involved, more subjects are exposed to the drug product, and the effectiveness of the drug product is also tested in addition to safety. During phase 2 or phase 3, drug products may also be made available for treatment use through one of several mechanisms for expanded access to investigational drugs.

FDA's general CGMP regulations for human drugs are set forth in parts 210 and 211. Although the preamble to a final rule published in the **Federal Register** of September 29, 1978 (43 FR 45014) (the 1978 final rule) issuing these regulations expressly stated that the CGMP regulations applied to investigational drug products, it also raised the possibility of proposing an additional CGMP regulation to cover drugs being used in research: ''The Commissioner finds that, as stated in § 211.1, these CGMP regulations apply to the preparation of any drug product for administration to humans or animals, including those still in investigational stages. It is appropriate that the process by which a drug product is manufactured in the development phase be well documented and controlled in order to assure the reproducibility of the product for further testing and for ultimate commercial production. The Commissioner is considering proposing

additional CGMP regulations specifically designed to cover drugs in research stages'' (43 FR 45014 at 45029). Such additional regulations have never been issued.

On February 21, 1991, FDA issued a guidance document entitled ''Preparation of Investigational New Drug Products (Human and Animal)'' (56 FR 7048) (the 1991 guidance). That document, however, did not discuss all manufacturing scenarios, and did not clearly address small- or laboratory-scale production of drug products for use in phase 1 clinical trials. Additionally, the 1991 guidance did not fully discuss FDA's expectations on appropriate approaches to manufacturing controls for batches produced during drug development.

For several reasons, FDA believes that production of human drug products, including biological drug products, intended for use in phase 1 clinical trials (phase 1 investigational drugs) should be exempted from complying with the specific regulatory requirements set forth in parts 210 and 211. First, even if exempted from the requirements of parts 210 and 211, investigational drugs remain subject to the statutory requirement that deems a drug adulterated if ''* * * the facilities or controls used for, its manufacture, processing, packing, or holding do not conform to or are not operated or administered in conformity with current good manufacturing practices to assure that such drug meets the requirements of this chapter [of the Federal Food, Drug, and Cosmetic Act (the act)] as to safety and has the identity and strength, and meets the quality and purity characteristics, which it purports or is represented to possess'' (section 501(a)(2)(B) of the act (21 U.S.C. 351(a)(2)(B))). Second, FDA oversees drugs for use in phase 1 trials through its existing IND authority. Every IND must contain, among other things, a section on chemistry, manufacturing, and control information that describes the composition, manufacture, and control of the investigational drug product (§ 312.23(a)(7) (21 CFR 312.23(a)(7))). Submission of this information, along with other information required in the IND, informs FDA of the steps that the manufacturer is taking to ensure the safety and quality of the investigational drug. Under this IND authority, FDA has the option to place an IND on clinical hold if the study subjects would be exposed to unreasonable and significant risk or if the IND does not contain sufficient information to assess the risks to subjects (21 CFR 312.42). FDA also may terminate an IND if the methods, facilities, and controls used for the manufacturing, processing, and packing of the investigational drug are inadequate to establish and maintain appropriate standards of identity, strength, quality, and purity as needed for subject safety (21 CFR 312.44(b)(1)(iii)).

Thus, even though FDA is exempting phase 1 drug products from compliance with the specific requirements of the CGMP regulations, FDA retains the ability to take appropriate actions to address manufacturing issues. For example, in addition to the authority to put an IND on clinical hold or terminate an IND, FDA may initiate an action to seize an investigational drug or enjoin its production if its production does not occur under conditions sufficient to ensure the identity, strength, quality, and purity of the drug, which may adversely affect its safety.

FDA believes this change in the CGMP regulations (parts 210 and 211) is appropriate because many of the issues presented by the production of investigational drugs intended for use in the relatively small phase 1 clinical trials are different from issues presented by the production of drug products for use in the larger phase 2 and phase 3 clinical trials or for commercial marketing. We are considering additional guidance and regulations to clarify FDA's expectations with regard to fulfilling CGMP requirements when producing investigational drugs for phase 2 and phase 3 clinical trials.

Additionally, many of the specific requirements in the regulations in part 211 do not apply to the conditions under which many drugs for use in phase 1 clinical trials are produced. For example, the concerns underlying the regulations' requirement for fully validated manufacturing processes, rotation of the stock for drug product containers, the repackaging and relabeling of drug products, and separate packaging and production areas are generally not concerns for these very limited production investigational drug products used in phase 1 clinical trials.

Consequently, in this final rule, FDA is amending the scope section of the drug CGMP regulations in part 210 to make clear that production of investigational drugs for use in phase 1 clinical trials conducted under an IND does not need to comply with the regulations in part 211. However, once an investigational drug product has been manufactured by, or for, a sponsor and is available for use in a phase 2 or phase 3 study, thus demonstrating an intent to expose more subjects to the investigational drug and requiring that the regulations' CGMP requirements be met, the same investigational drug product used in any subsequent phase 1 study by the same sponsor must be manufactured in compliance with part 211. In addition to drug products that, if eventually approved, would be approved under section 505 of the act (21 U.S.C. 355), this rule applies to investigational biological products that are subject to the CGMP requirements of section 501(a)(2)(B) of the act. Examples of such products include recombinant and non-recombinant therapeutic products, vaccine products, allergenic products, in vivo diagnostics, plasma derivative products, blood and blood products, gene therapy products, and somatic cellular therapy products (including xenotransplantation products) that are subject to the CGMP requirements of section 501(a)(2)(B) of the act. Therefore, this final rule exempts the production of phase 1 investigational drugs from complying with the regulatory requirements set forth in parts 210 and 211.

III. Legal Authority

Under section 501(a)(2)(B) of the act, a drug is deemed adulterated if the methods used in, or the facilities, or controls used for, its manufacture, processing, packing or holding do not conform to, or are not operated in conformity with, CGMPs to ensure that such drug meets the requirements of the act as to safety, and has the identity and strength, and meets the quality and purity characteristics, which it purports or is represented to possess. The rulemaking authority conferred on FDA by Congress under the act permits FDA to amend its regulations as contemplated by this final rule. Section 701(a) of the act (21 U.S.C. 371(a)) gives FDA, through delegation from the Secretary of the Department of Health and Human Services, general rulemaking authority to issue regulations for the efficient enforcement of the act. We refer readers to section V of the preamble of the 1978 final rule for a fuller discussion of our CGMP rulemaking authority (43 FR 45014 at 45020–45026).

IV. Summary of the Final Rule

This final rule adds paragraph (c) to § 210.2, exempting certain investigational drugs for use in a phase 1 clinical trial (including biological drugs) from compliance with part 211. However, these drugs remain subject to the statutory requirements under section 501(a)(2)(B) of the act, i.e., CGMP. The regulation also explains that the exemption from compliance with part 211 does not apply to an investigational drug that a sponsor has made available

for a phase 2 or phase 3 clinical trial, or has lawfully been marketed, and is being used for a phase 1 clinical trial. Such investigational drug products used for a phase 1 clinical trial must comply with part 211.

We have also changed the term ''defined'' to ''described'' for clarification.

V. Comments on the Proposed Rule and FDA's Responses

We received approximately 14 comments on the proposed rule. Several comments were duplicate submissions by the same entity; several other comments submitted to the docket pertained to the draft guidance under a separate docket number. These comments were also considered in revising the draft guidance. The following responses are specific to the comments on the proposed rule.

A. General Comments

(Comment 1) Several comments welcome the proposed changes and commend FDA for revising the regulations to exempt phase 1 investigational drugs from regulatory CGMP under part 211. One comment adds that, because most products do not proceed beyond the clinical trial phase of development, the burden of full compliance with CGMP at the phase 1 stage far outweighs any perceived benefit and suggests that FDA devise a progressive scale for CGMP compliance beginning with phase 1 clinical trials through approval to market the product.

(Response) We appreciate these supportive comments. Our expectation in issuing this final rule is that sponsors will take an appropriate approach to instituting manufacturing controls appropriate for the stage of investigational drug development.

(Comment 2) Some comments oppose exempting phase 1 investigational drugs from compliance with part 211 because they are concerned that there could be an effect on product safety and human subject protection. Another comment believes that FDA's proposed approach to exempt phase 1 investigational drugs from the applicability of part 211 not only invites greatly reduced product standards, but affects FDA's ability to take remedial action. One reason given was that FDA does not have the personnel to monitor the manufacture of phase 1 investigational drugs during clinical trials. Another comment believes that if the phase 1 investigational drugs are not reproducible, not well-documented, or not well-controlled, the results of the trial will be meaningless and delay availability of new drugs for commercial use. The comment continued to state that an establishment could interpret FDA's proposal as loosening the basic requirements needed for phase 1 material, which would not only jeopardize patients and the results of the phase 1 clinical trial, but also the investigational stages of development that follow.

(Response) We are confident that exempting phase 1 investigational drugs from the CGMP regulations in part 211 will not jeopardize product safety or human subject protection. This action is intended to focus a manufacturer's effort on applying CGMP that is appropriate and meaningful for the manufacture of the earliest stage investigational drug products intended for use in phase 1 clinical trials, while also ensuring the products' safety and quality. An additional consequence of this action is to streamline and promote the drug development process. The companion guidance provides our current thinking on ways to comply, through the use of specified quality controls, with statutory CGMP for the production of phase 1 investigational drugs. As previously described, we will continue to oversee product safety and human subject protection through articulation of statutory CGMP requirements, clarified in the companion guidance, and a thorough review of the chemistry, manufacturing, and control information submitted in the IND application for identity, quality, purity, strength, and potency of the investigational drug necessary to ensure the safety of the subjects in the phase 1 clinical trial. We believe that this exemption does not ''loosen'' the requirements, but establishes quality control principles that are appropriate and comprehensive for the manufacture of phase 1 investigational drugs, i.e., interpreting and implementing CGMP consistent with good scientific methodology.

We also believe that the exemption will not affect or change our ability to take remedial action if necessary, or to monitor the manufacture of such investigational drugs; nor do we believe that this action will delay availability of new drugs for commercial use. As stated elsewhere in this document and in the proposed rule, compliance with CGMP is required by section 501(a)(2)(B) of the act and a drug can be deemed adulterated by FDA for failure to comply with statutorily mandated CGMP.

(Comment 3) One comment states that the proposed rule was misleading and unclear. The comment asserts, correctly, that a phase 1 investigational drug used in phase 2 and phase 3 clinical trials must comply with part 211, but argues that the progression of the study to phase 2 and phase 3 is unknown at the time of the phase 1 investigational drug production. Therefore, the sponsor will most likely produce the phase 1 investigational drug in compliance with part 211 in lieu of not being able to use data from the phase 1 study for phase 2 and phase 3.

(Response) We disagree that the proposed rule was misleading and unclear. In the preamble to the direct final rule (71 FR 2458 at 2459), we explained that we believe the exemption for phase 1 investigational drugs ''is appropriate because many of the issues presented by the production of investigational drugs intended for use in the relatively small Phase 1 clinical trials are different from issues presented by the production of drug products for use in the larger Phase 2 and Phase 3 clinical trials or for commercial marketing.'' Given the differences between phase 1 clinical trials and phase 2 and phase 3 clinical trials discussed in section II of this document, we believe compliance with the particular regulations in part 211 is not appropriate for phase 1 investigational drugs because many of the specific requirements in part 211 do not apply to the manufacture of phase 1 investigational drugs in the same manner because they were intended to apply to commercial drug manufacture. For example, rotation of the stock for drug product containers, the repackaging and relabeling of drug products, and separate packaging and manufacturing areas are generally not of concern for the limited production of phase 1 investigational drugs. Additionally, the requirement for fully validated manufacturing processes may not be appropriate for this early stage of development. We believe that recommending approaches and considerations, and allowing the manufacturer to develop specific controls appropriate for the particular product, manufacturing process, and facility in order to comply with statutory CGMP requirement is less burdensome and more efficient for the sponsor. We agree that drug products used in phase 2 and phase 3 clinical trials may be improved or refined (i.e., manufacturing process and/or product) based on the results of the phase 1 clinical trial. However, limiting the exemption from compliance with the regulations in part 211 to drugs for use in phase 1 clinical trials (and not extending it to drugs that a sponsor has made available for a phase 2 or phase 3 clinical trial, or has lawfully marketed) does not preclude the use of

data from a phase 1 clinical trial for phase 2 and phase 3. While it is true that some sponsors may choose to manufacture phase 1 investigational drugs in compliance with the regulatory requirements in part 211 in anticipation of expansion of the product into phase 2 clinical trials, this rule does not require that they do so, and it is up to the manufacturer to determine whether it makes sense in their particular case to manufacture the phase 1 drug in compliance with the regulations in part 211.

(Comment 4) One comment states that FDA is ignoring past reports of phase 1 clinical trial failure, i.e., the two subject deaths in phase 1 clinical trials conducted at Johns Hopkins University and the University of Pennsylvania, and the six subjects who experienced major organ failure in a phase 1 clinical trial in England. The comment also adds that there have been several deaths and recalls due to drugs compounded by pharmacists and an increase of recalls of medical devices due to CGMP noncompliance. The comment also makes the statement that FDA should not assume that a medical researcher or other employee would be able to make safe phase 1 materials following guidance.

(Response) We disagree with the comment highlighting the cases as a reason for not issuing this final rule. Investigations of the referenced cases found no evidence to suggest that the adverse events were caused by the manufacturing of the phase 1 investigational drug (Refs. 1, 2, and 3), and neither the British not the Johns Hopkins studies had been submitted to FDA under IND, and so had consequently not been prospectively reviewed by FDA (See *http://www.fda.gov/cder/warn/2003/02–hfd–45–0303.pdf*), and thus, we are of the opinion that nothing in this final rule would have affected the outcome of any of the specific cases mentioned as we are not aware that CGMP was deficient or contributed to the deaths. As to the implication in the comment that these three cases indicate that there are risks in the manufacture of drugs for use in phase 1 clinical trials, we believe that there is risk in the manufacture of any drug, whether investigational or not and regardless of the stage of testing. We note, again, that investigational drugs for use in phase 1 clinical trials remain subject to statutory CGMP, and a companion guidance is being issued concurrent with this rule to provide suggested approaches for complying with statutory CGMP for phase 1 investigational drugs.

With regard to the comment on pharmacy compounding errors, the reported instances of recalls due to drugs compounded by pharmacists are not analogous to producing drugs for phase 1 clinical trials, which is the subject of this rulemaking. Moreover, the comment concerning an increase of medical device recalls due to CGMP noncompliance apparently assumes that this final rule relieves phase 1 investigational drugs of compliance with any CGMP requirements. However, as previously discussed, this final rule exempts phase 1 investigational drugs only from regulatory CGMP requirements in parts 210 and 211. The statutory requirement to comply with CGMP still applies. We note that, in addition to the considerations described in the guidance, reference to technical information and appropriate training are necessary to comply with statutory CGMP.

B. CGMP Regulation Specific to Phase 1 Investigational Drugs

(Comment 5) Several comments request that FDA engage stakeholders and issue a new rulemaking for CGMP specific to phase 1 investigational drugs. One comment suggests that FDA apply the comments submitted to the docket on the proposed rule and draft guidance in proposing a new rule. Another comment suggests that FDA amend only the relevant requirements, e.g., on the repackaging and relabeling of drug products, retaining the oversight in all phases of a clinical trial of a drug.

(Response) We appreciate the comments and will consider the appropriateness of such a proposed rule. For current purposes, however, we intend to proceed directly from the statute, and direct the public to the companion guidance that is being issued concurrently with this rule, suggesting some approaches to comply with statutory CGMP for phase 1 investigational drugs.

C. Scope

(Comment 6) One comment requests FDA to clarify the scope of the rulemaking, i.e., that the scope does not include active pharmaceutical ingredients (API).

(Response) The scope of the exemption from compliance with part 211 includes investigational new human drug and biological products, including finished dosage forms used as placebos, for human use in a phase 1 study or trial. Examples of such investigational drugs include, but are not limited to, the following:

- Investigational recombinant and non-recombinant therapeutic products,
- Vaccine products,
- Allergenic products,
- In vivo diagnostic products,
- Plasma derivative products,
- Blood and blood components[1],
- Gene therapy products, and
- Somatic cellular therapy products (including xenotransplantation products).

However, if such products have already been manufactured by an IND sponsor for use during phase 2 or phase 3 clinical trials or have been lawfully marketed, the manufacture of such a product must comply with the appropriate requirements of part 211 for the product to be used in any subsequent phase 1 clinical trial, irrespective of the trial size or duration of dosing.

Manufacturers of new active pharmaceutical ingredients (also referred to as ''API'' or ''drug substance'') are already exempt from compliance with part 211 and must also conform with CGMP as required in section 501(a)(2)(B) of the act. Thus, this rule does not change in any way how APIs are regulated with regard to CGMP. As stated in the companion guidance, limited guidance on CGMP for the manufacture of new API for some IND products used in clinical trials is also available (see International Conference on Harmonisation (ICH) Q7A GMP Guide for API (ICH Q7A guidance)). Manufacturers of APIs should implement controls appropriate to the stage of development and, thus, should also consider the recommendations described in the companion guidance for manufacture of API used in investigational drug products for phase 1 clinical trials.

(Comment 7) In the direct final rule, FDA makes the statement ''[T]his action is intended to streamline and promote the drug development process'' (71 FR 2458 at 2459). One comment believes that this proposal is outside the scope of FDA's mission mandated by Congress, i.e., to ''promote the public health by promptly and efficiently reviewing clinical research and taking appropriate action on the marketing of regulated products in a timely manner'' and ''with respect to such products, protect the public health by ensuring that * * * human and veterinary drugs are safe and effective.'' The comment

[1] You should consult with the Office of Blood Research and Review, Center for Biologics Evaluation and Research (CBER), to determine circumstances when an IND would be required for blood or a blood component. Manufacturers of blood and blood components intended for transfusion and for further manufacture must still comply with the applicable regulations in 21 CFR parts 600 through 660.

further states that FDA was established to serve as a consumer protection agency and a check and balance on regulated industry.

(Response) As section III of this document notes, CGMP is required by section 501(a)(2)(B) of the act, and FDA has been given the general authority to issue regulations for the efficient enforcement of the act. We note here as well that, under section 505(i) of the act, FDA is directed to issue regulations for exempting from the requirements of section 505 ''drugs intended solely for investigational use by experts qualified by scientific training and experience to investigation the safety and effectiveness of drugs,'' which include drugs for use in phase 1 clinical trials. While we agree that FDA is an agency whose public health mission demands an emphasis on safety, we note that this does not require us to impose burdens on drug development that do not have a commensurate public health benefit. We believe that this final rule is appropriate because many of the regulatory requirements in part 211 simply are not applicable to the manufacture of products intended for use in phase 1 clinical trials, and that the agency can continue to protect human subjects via interpretation of statutory CGMP and the IND process.

D. Direct Final Rule and Companion Proposed Rule Approach

(Comment 8) A couple of comments object to the direct final rule/companion proposed rule approach (rulemaking approach). One comment believes that the process did not allow for a discussion regarding the quality of clinical trial material, i.e., the establishment of meaningful, consistent standards that balance patient protection with speed of development. The comment then suggests that FDA work with industry to address industry-wide questions about quality for clinical trial materials, e.g., equipment qualification, water quality, method validation or qualification, sterility assurance, control of contractors, complaints, cleaning, and specifications.

(Response) We disagree with the assertion that we did not allow for a discussion regarding the quality of clinical trial material. In developing the companion guidance, we utilized our experience with IND submissions and facility inspections. In addition, comments submitted to the docket were considered in finalizing the rule and the companion guidance, as well as stakeholder comments provided in multiple venues where FDA representatives discussed the proposed rule and draft guidance. Both the companion guidance and relevant IND regulations emphasize safety as the primary focus of phase 1 clinical trials. The companion guidance is written to allow for flexibility in utilizing appropriate CGMP controls for the product, manufacturing process, and facility to assure product safety. We will continue to work with stakeholders to refine appropriate standards as needed through continued discussions and meetings in various venues with stakeholders.

(Comment 9) One comment states that FDA does not have the expertise to issue guidance or regulation without stakeholder input and adds that the manufacture of clinical supplies is a complex matter in which FDA has almost no experience. The comment also states that FDA lacks expertise in clinical GMP compliance because FDA has performed few inspections of early clinical supply material.

(Response) We disagree with this comment. The decision to generate guidance for this early phase of clinical trial manufacture was due primarily to the constant requests for guidance in this area from the pharmaceutical industry, academia, and other research organizations. The publication of the draft guidance and the direct final and proposed rules in January 2006 was to address this apparent need, and to seek broader stakeholder input. Additionally, we have experience from numerous sources, such as participation with stakeholders in related workshops and conferences, facility inspections, and other interactions that result in sufficient understanding necessary to issue rulemaking and companion guidance. Contrary to the suggestion of the comment, conducting inspections of early clinical trial material is not the exclusive source of FDA expertise in this area.

(Comment 10) One comment believes that FDA's finding that the subject is suitable for this rulemaking approach is based on assumptions, not data, such as the results of ''for cause'' inspections, treatment IND inspections, or reports of adverse drug events occurring during phase 1 clinical trials.

(Response) We disagree with the comment. In the direct final rule, we stated that the rulemaking approach is appropriate because many of the issues present in the manufacture of phase 1 investigational drugs are different from those issues presented by the manufacture of drugs for later investigational phases or for commercial marketing, and that many of the specific requirements in part 211 are not applicable in the manufacture of the smaller batches of investigational drugs usually used in phase 1. These statements are not based on assumptions, as the comment suggests, but on the knowledge of, and experience with, good manufacturing practice for phase 1 investigational drugs.

(Comment 11) One comment states that the proponents of the rulemaking approach cite the successful use of ICH Q7A guidance and its use during inspections without the need for a regulation. The comment suggests that the possible reason for the successful use is that the ICH Q7A guidance is more detailed than the draft guidance and is used to manufacture material that is further processed before being delivered to patients.

(Response) We disagree with the comment. Due to the more defined routes of manufacture of APIs, and the general application of CGMP to APIs in the companion guidance, the ICH Q7A guidance was able to provide more detail for the commercial manufacture of APIs. Early phase clinical trial material may use many different routes of manufacture, some of which may be new and innovative. In addition, the recommendations or expectations contained in the ICH Q7A guidance (see section XIX of that guidance, on APIs for use in clinical trials) utilize an approach to CGMP similar to that outlined in the companion guidance. For the reason stated in response to comment 4, we believe that the companion guidance provides adequate considerations when supplemented with additional technical information and appropriate training to comply with CGMP.

E. Exemption From Part 211

(Comment 12) One comment believes that compliance with statutory CGMP requirements and exemption of phase 1 investigational drugs from the requirements in part 211 subjects phase 1 investigational drugs to unwritten standards, developed case-by-case without any input from the public or industry. The comment also states that unwritten standards would lead to differing interpretations within FDA, e.g., by individual investigators, district offices, and review divisions. Inconsistency, non-transparency, and uncertainty slow product development as the industry tries to comply on a shifting landscape of uncertain legal basis.

(Response) We disagree with the comment. We believe that we have provided sufficient opportunity for the public and industry to comment on the proposed exemption of phase 1 investigational drugs from compliance

with part 211, the draft guidance, and the impact of such action. The purpose of the companion guidance is to provide recommendations for compliance with statutory CGMP and to promote consistency in compliance. The companion guidance is intended for use not only by industry, but also by FDA staff to assist in fulfilling their review and enforcement responsibilities. It bears emphasis that, because FDA has set forth its interpretation of some acceptable approaches to statutory CGMP in the companion guidance, as opposed to a rule, we remain open to alternative approaches to compliance, so long as they provide comparable safety and protection for human subjects. We believe this approach maximizes flexibility and minimizes burden, without diminishing safety protections.

(Comment 13) One comment states that unclear rules erode quality. For example, financially strapped companies will not be able to justify expenses based on recommendations in a draft guidance. Inevitably, some companies will stumble, and quality will drop.

(Response) Industry is not obligated to implement draft guidance. Draft guidance is for the purpose of soliciting comments on FDA's current thinking on a subject.

In § 10.115(d)(1) (21 CFR 10.115(d)(1)), we explain that guidance does not legally bind the public or FDA. Therefore, a financially strapped company may choose to use a less expensive approach other than the one recommended in a guidance, but the alternative approach must comply with the relevant statutes and regulations in assuring patient safety, and the company would be prudent to consult FDA before using the alternative approach. As previously stated in our response to comment 12, we believe this rule maximizes flexibility and minimizes burden without diminishing safety protections.

(Comment 14) One comment believes that regulatory CGMP provides minimum, legal requirements to safely make drugs or biologics made for use in humans. Another comment states that, instead of the detailed, enforceable standards laid out in part 211, FDA proposes to rely upon three sources of authority that are variously lacking in detail and/or enforceability, i.e., the statutory authority (section 501(a)(2)(B) of the act), the IND submission requirements in § 312.23, and the draft guidance.

(Response) We disagree with this comment, and believe the comment confuses the requirements of the statute and the regulations. Many of the regulatory requirements in part 211 are not readily applicable to the manufacture of investigational drugs for use in phase I clinical trials. As previously stated, because such products still must comply with statutory CGMP, and because FDA has offered suggestions for acceptable methods for complying with statutory CGMP, we believe that manufacturers will have sufficient guidance to know what they must do to safely make drugs or biologics for such early stage clinical trial use in humans. We dispute the assertion that we are eschewing detailed, enforceable standards in favor of relying upon three sources of authority that are variously lacking in detail and/or enforceability. Statutory CGMP remains enforceable and we are issuing a companion guidance that details acceptable approaches for complying with statutory CGMP, and FDA's authority to place clinical trials on hold (under its IND authority) remains unchanged.

(Comment 15) One comment states that FDA assumes that, once this rulemaking is final and phase 1 investigational drugs are exempt from complying with part 211, new sponsors would keep proper records, perform necessary testing, or keep retention samples for later investigations, or that they would take the time to learn and follow CGMP if there were no regulations requiring them to do so. Another comment states that FDA, without evidence, claims that having to actually produce drug or biological products according to accepted international standards is a barrier too high for entry into phase 1 studies. The comment continues to say that such barriers do serve a social purpose, i.e., preventing those incapable of following or unwilling to follow CGMP from administering investigational products to humans.

(Response) As mentioned in the preamble to the proposed rule and draft companion guidance, application of part 211 is not appropriate to the production of IND products used in phase 1 studies. The type and extent of CGMP for investigational studies differs from those typically employed for routine commercial manufacturing, and in some cases may even include more stringent controls for certain manufacturing operations of investigational products. We believe that the proposed rule and the draft companion guidance better communicate FDA expectations and facilitates compliance with CGMP for the production of phase 1 investigational drugs rather than trying to apply existing part 211 regulations. Our expectation that phase 1 investigational drugs be manufactured following appropriate CGMP in adequate manufacturing facilities has not diminished with the adoption of this approach.

FDA is not claiming that the manufacture of a drug or biological product for use in phase 1 studies according to international standards presents too high a barrier. FDA's position is that the United States' good manufacturing practice regulations were written primarily to address commercial manufacturing and do not consider the differences between early clinical supply manufacture and commercial manufacture. The final rule and companion guidance are intended to address these differences, while still requiring all drugs for human consumption, including those used in clinical trials, to be manufactured in accordance with CGMP as required by section 501(a)(2)(B) of the act.

F. Risk to Patients

(Comment 16) One comment maintains that FDA understates the risk to patients. The comment continues to say that the CGMP regulations are designed to protect patients from mishaps that would have major impact on the clinical subject, e.g., contamination with bacteria, penicillin, or industrial cleaning agents; and product mix-ups. Another comment believes that § 312.23, which requires companies to submit information about the clinical material, has nonexistent patient protections, and that submitting general information is no substitute for compliance with CGMP.

(Response) We disagree with the assertion that we understated the risk to subjects (patients). We believe that there is no additional risk to subjects with this exemption, and have provided recommendations that interpret and implement CGMP consistent with good scientific methodology. In complying with section 501(a)(2)(B) of the act, a manufacturer must manufacture the drug in conformity with good manufacturing practice to assure that the drug meets the requirements of the act as to safety and has the identity and strength, and meets the quality and purity characteristics, which it purports or is represented to possess. If the drug does not meet these criteria, the drug is considered adulterated and therefore a possible risk to subjects. Because the statutory requirements allow for flexibility in describing CGMP, we have issued the companion guidance to recommend CGMP for phase 1 investigational drugs. These recommended quality controls for

producing a phase 1 investigational drug are specifically designed to ensure subject safety.

(Comment 17) One comment believes that the exemption of phase 1 investigational drugs from part 211 puts patients at risk because it is difficult to prove what CGMP is, and makes it difficult for FDA to investigate or prosecute serious cases. The comment also states that a quality assurance (QA) unit is required for preclinical studies and a quality control (QC) unit is required for phase 2 and phase 3 studies. However, the new approach does not provide for a QA or QC unit for phase 1 studies.

(Response) We disagree with this comment. As previously discussed in section II of this document, CGMP consists of steps that a manufacturer takes to ensure the safety and quality of the investigational drug. This information is submitted to FDA in the IND. Through FDA's IND authority, FDA has the ability to take appropriate actions to address manufacturing issues if there is a safety risk to subjects, i.e., place an IND on clinical hold, terminate an IND, seize an investigational drug, or prohibit its production.

The functions performed by QA and/or QC unit(s) appropriate for this early phase of clinical trial material manufacture were clearly spelled out in the draft companion guidance. We describe in the companion guidance the QC functions that should be in effect to manufacture in compliance with CGMP for phase 1 clinical trials. It is at the discretion of the manufacturer if it wishes to implement these responsibilities through separate QA and QC groups.

(Comment 18) One comment asserts that if the study subjects are exposed to unreasonable and significant risk or if the IND does not contain sufficient information to assess risk to patients, any action by FDA, i.e., placing a clinical hold or terminating an IND, would occur after the fact and well after patients are injured in the trial.

(Response) Sponsors must inform the subjects of clinical trials of inherent, unknown risks (21 CFR 50.25). FDA will typically place a clinical hold or terminate an IND as a result of evaluating safety information provided as part of the IND review. Such evaluations are conducted prior to the initiation of the clinical trial. Therefore, we can and will, when appropriate, take such actions before the clinical trial proceeds. In addition to taking action before the clinical trial begins, we also have the ability under statutory CGMP to take enforcement actions once the phase 1 clinical trial begins.

(Comment 19) One comment points out that FDA recognizes that, although part 211 applies to phase 2 and phase 3 investigational drugs, the extent of the controls varies based on the phase of the clinical study. The comments also state that FDA agrees that not all sections of part 211 may apply to phase 2 and phase 3 investigational drugs. For this reason, the comment suggests revising the last sentence of proposed § 210.2(c) to require that the drug for use in phase 1 study comply with the appropriate sections of part 211. Another comment also provided alternative language to § 210.2(c) stating that if the investigational drug has been made available for a phase 2 or phase 3 study or the drug has been lawfully marketed, and the manufacturer needs to conduct further phase 1 studies to generate data to support the registration of the clinical indication being developed, the drug used in the phase 1 clinical trial need not comply with part 211.

(Response) We disagree with the comment. Because of the wide variability in the possible manufacturing processes used to produce early phase clinical trial material, it is not feasible to specify what parts of part 211 are appropriate in a companion guidance, because what may be appropriate for one manufacturing situation may be inappropriate for another.

We decline to use the alternative codified language proposed by the comment, which would exempt from the requirements of parts 210 and 211 investigational drugs used in phase 1 clinical trials where the drugs have been lawfully marketed or used in phase 2 or phase 3 clinical trials. Because the drug products in question have already been manufactured using CGMP as indicated in part 211, the manufacturing knowledge is already available and should be fully utilized.

(Comment 20) One comment reiterates the proposal that phase 1 investigational drugs would be manufactured following statutory requirements and recommendations through guidance for CGMP, and if used for a phase 1 clinical trial after available for phase 2 and phase 3 clinical trials or marketed, the phase 1 material would be manufactured using regulatory CGMP. The comment raises the question of the possibility that the phase 1 investigational drugs not manufactured per the same standard and used on human subjects is unethical. Another comment suggests that if only certain phase 1 investigational drugs follow CGMP while others are exempt it promotes a situation where subject safety may be at risk.

(Response) We believe that the comment fails to recognize that the scope of the specific recommendations for CGMP in support of the statutory requirements provides the same, if not additional, protection of the phase 1 clinical trial subject. Given that FDA retains oversight over these part 211-exempt phase 1 products via the IND mechanism, and that the agency is issuing guidance on ways to comply with statutory CGMP in the manufacture of such products, we firmly believe that this rule presents no safety or ethical issue. However, as discussed elsewhere in this preamble, we are requiring that phase 1 investigational drugs that the sponsor makes available for phase 2 and phase 3 clinical trials or as lawfully marketed drugs comply with part 211. This is because, given the manufacturing scale of a product that will be administered beyond a phase 1 trial, such products are more like products manufactured for use in phase 2 and phase 3 clinical trials or lawfully marketed drugs. The fact that we are requiring investigational drugs manufactured in significant enough quantities that they are available for phase 2 or phase 3 testing or lawful marketing to comply with regulatory CGMP, does not mean that product that is manufactured only for use in a phase 1 trial, and is thus exempt from complying with regulatory CGMP, is unsafe. The current rulemaking exempting products from compliance with part 211 is limited to products manufactured exclusively for use in a phase 1 trial and the fact that some products used in phase 1 trials will be manufactured in compliance with the requirements of part 211 does not mean that products that are not so manufactured in compliance with statutory CGMP are unsafe.

G. Use of Guidance

(Comment 21) One comment believes that FDA should not use guidance in place of minimum CGMP requirements for the safe manufacture of drugs or biologics for human beings. Another comment requests that FDA not exempt the manufacture of phase 1 investigational drugs from part 211, but instead issue guidance to help manufacturers find innovative, simple, and inexpensive approaches to comply with CGMP regulations and keep their products safe for the trial subjects.

(Response) We are not issuing the companion guidance in place of minimum CGMP requirements. CGMP is required by statute, and the companion guidance provides our current thinking on complying with statutory CGMP. As previously stated, this action is

intended to focus a manufacturer's effort on applying CGMP that is appropriate and meaningful for phase 1 investigational drugs, and to streamline and promote the drug development process while ensuring the safety and quality of the earliest stage investigational drug products. We also expect this action to help promote innovative, simple, and inexpensive approaches to complying with the statutory CGMP requirements. As discussed in our response to comment 13, we are willing to discuss with the manufacturer alternative approaches that comply with the statutory requirements and that may be more innovative, simple, or inexpensive than the recommendations in the companion guidance.

(Comment 22) Several comments express concern that guidance is not legally binding and therefore, not enforceable. One of the comments states that relying on guidance invites misunderstandings and inconsistencies, while another comment believes that if not required under part 211, manufacturers may not take the time to read or familiarize themselves with guidance related to CGMP, i.e., testing, manufacturing sterile or aseptic dosage forms, and employee qualification/training. A comment also believes that guidances do not undergo the same level of notice and comment, and lacks the complete input of interested parties.

(Response) We agree with the comment that the companion guidance is not legally binding and not enforceable. However, the statutory requirement that drugs, including investigational drugs for use in phase 1 trials, comply with CGMP is legally binding and enforceable. We believe that a sponsor, guided by its knowledge, experience, and technical information applying good scientific methodology, following FDA recommendations, and undertaking appropriate activities (e.g., training), can adequately and appropriately comply with statutory CGMP. We disagree that relying on guidance invites misunderstandings and inconsistencies. In fact, to the contrary, we believe that guidance reduces misunderstandings and inconsistencies because guidance provides FDA's interpretation of or policy on a regulatory issue, while still allowing for flexibility and innovation.

With regard to adequate notice to, and comment by, interested parties on guidance documents, the public can participate in the development and issuance of guidance documents as described in § 10.115(f) and (g), i.e., provide comment on issued draft guidance documents, suggest areas for guidance document development, submit drafts of proposed guidance documents for FDA to consider, suggest that FDA revise or withdraw an already existing guidance document, or comment on FDA's annually published list of possible topics for future guidance document development or revision. Therefore, we disagree with the comment that guidance does not undergo sufficient notice and comment, and lacks the complete input of interested parties. Moreover, we received extensive comments on the draft companion guidance from numerous entities and have considered these comments in preparing the companion guidance.

(Comment 23) Two comments express concern regarding the effect of the companion guidance on the 1991 guidance on preparation of INDs, which recommends the application of certain sections of parts 210 and 211 to phase 2 and phase 3 clinical trials. The comments also request that FDA clarify the status of the 1991 guidance for phase 2 and phase 3 materials with regard to complying with CGMP requirements. Another comment asks if FDA expects an incremental application of CGMP for the production and testing of phase 2 and phase 3 clinical supplies, or if the 1991 guidance will remain in effect for phase 2 and phase 3 materials until the new phase 2 and phase 3 guidance document is available.

(Response) As stated in the introduction of the companion guidance, the companion guidance will replace the 1991 guidance only as it applies to phase 1 investigational drugs. This action does not affect the scope of the 1991 guidance as it applies to phase 2 and phase 3 investigational drugs, which remains in effect until superseded by a subsequent guidance document.

(Comment 24) One comment states that the guidance would allow the same person manufacturing the material (a non-QC unit employee) to also release the material to the clinic. The comment further states that the release of material by a non-member of the QC unit violates United States CGMP and a non-Qualified Person violates European Union CGMP, and does not appear to recognize the importance of having an experienced and knowledgeable unit or person to safely release the materials.

(Response) We agree with this comment in part. The companion guidance recognizes the need to have quality control in this early phase of clinical trial material manufacture and has provided recommendations for the quality control procedures that should be used. We provide flexibility for operations where a very small amount of clinical material is produced. While we agree that release of material by an untrained person violates United States CGMP, this is not what is recommended in the companion guidance, which indicates that, under very limited circumstances and where justified, only a person trained in CGMP and quality control functions should be given the dual responsibility of manufacture and release. The interpretation in the companion guidance is consistent with the quality unit functions under part 211 and the nature of commercial and investigational products.

H. Impact

(Comment 25) FDA makes the following statement in the direct final rule (71 FR 2458 at 2461). ''For drug manufacturers that produce Phase 1 drug products in-house and also produce approved drug products, this direct final rule is expected to reduce the amount of documentation they produce and maintain when they manufacture a Phase 1 drug. In some cases, it should also reduce the amount of component and product testing.'' Two comments state that because it is unknown at the time of clinical manufacture if a phase 1 drug will continue to phase 2, manufacturers will likely elect to take a conservative approach and manufacture a drug to phase 2 requirements (part 211) to allow the phase 1 drug to be used in future phase 2 studies. Because of availability concerns in the clinical phase, manufacturers would most likely elect to not discard phase 1 material that could be used in phase 2. Therefore, the statement regarding savings is questionable.

(Response) We agree with the comment that some manufacturers may decide to follow part 211 when manufacturing phase 1 investigational drugs. However, the saving estimate was intended to be an estimate of incremental savings should manufacturers chose to follow the companion guidance, as some manufacturers will.

(Comment 26) One comment requests that FDA evaluate the cost of compliance against the hypothetical public health risk of a product that did not reach the market and the likelihood and severity of risks to volunteers. Another comment states that the additional risk to patients in a phase 1 clinical trial does not justify the proposed savings of $1,440 per IND in documentation, training, and other ''reduced'' requirements. The comment also states that the potential costs of $810 per IND is a gross underestimation

of how much it will cost to manufacture a sterile or aseptic product for the first time.

(Response) In section V.F of this document, the responses to comments 16 through 20 state that there will be no change in the risk to patients in phase 1 clinical trials as a result of the final rule. The cost estimate was intended to capture the incremental cost of complying with the proposed rule given current practice under part 211; it does not reflect total costs. A cost-benefit analysis of phase 1 clinical trials or clinical trials in general is beyond the scope of this document.

(Comment 27) One comment believes that the expense is not for compliance with CGMP, especially if systems and procedures are simple, but for the training of personnel.

(Response) Training personnel is a cost of complying with the current CGMP regulation; the estimate in the proposed rule captured the incremental increase in training costs to comply with the proposed rule.

VI. Analysis of Impacts

FDA has examined the impacts of this final rule under Executive Order 12866 and the Regulatory Flexibility Act (5 U.S.C. 601–612), and the Unfunded Mandates Reform Act of 1995 (Public Law 104–4). Executive Order 12866 directs agencies to assess all costs and benefits of available regulatory alternatives and, when regulation is necessary, to select regulatory approaches that maximize net benefits (including potential economic, environmental, public health and safety, and other advantages; distributive impacts; and equity). The agency believes that this final rule is not a significant regulatory action under the Executive order.

The Regulatory Flexibility Act requires agencies to analyze regulatory options that would minimize any significant impact of the rule on small entities. Because exempting production of drugs for use in phase 1 clinical trials from compliance with specific regulatory requirements does not add to the compliance burden of small entities, and in most cases reduces it, the agency certifies that the final rule will not have a significant economic impact on a substantial number of small entities.

Section 202(a) of the Unfunded Mandates Reform Act of 1995 requires that agencies prepare a written statement, which includes an assessment of anticipated costs and benefits, before proposing ''any rule that includes any Federal mandate that may result in the expenditure by State, local, and tribal governments, in the aggregate, or by the private sector, of $100,000,000 or more (adjusted annually for inflation) in any one year.'' The current threshold after adjustment for inflation is $127 million, using the most current (2006) Implicit Price Deflator for the Gross Domestic Product. FDA does not expect this final rule to result in any 1-year expenditure that would meet or exceed this amount.

The purpose of this final rule is to amend our current CGMP regulations to exempt the manufacture of investigational drugs used in phase 1 clinical trials from compliance with the requirements in part 211. The rule affects drug manufacturers, chemical manufacturers, and laboratories that manufacture drugs on a small scale for use in phase 1 clinical trials.

For drug manufacturers that produce in-house investigational drugs for use in phase 1 clinical trials and also produce approved drug products for marketing, this final rule is expected to reduce the amount of documentation they produce and maintain when they manufacture an investigational drug for use in a phase 1 clinical trial. In some cases, it should also reduce the amount of component and product testing.

Because they currently may not supply the pharmaceutical industry, some chemical manufacturers and laboratories may experience a slight increase in documentation if they do not have written standard operating procedures (SOPs) or if they need to modify existing methods of documentation. Although formats may be different, the rule should not require more information than is already collected as part of standard laboratory practices.

Because the actual SOPs and manufacturing requirements are different for each new drug product and manufacturing facility, the procedures to comply with the statutory CGMP requirements for phase 1 manufacturing are generated as part of product development. The savings or costs would be incurred on a per-IND and not per-facility basis.

This rule is intended to clarify compliance with the statutory CGMPs that are necessary in the manufacture of investigational drugs used in phase 1 clinical trials, and to exempt certain drugs produced under IND and used for phase 1 clinical trials from regulatory CGMP requirements under part 211. Some manufacturers may realize savings because they no longer must meet certain requirements. The savings to drug manufacturers that manufacture in-house the investigational drugs used in phase 1 clinical trials will vary greatly from product to product. FDA lacks data to estimate where the cost savings will occur in the manufacture of investigational drugs. Some substantial savings may be realized in testing and analyzing components and in-process materials. These costs can typically range from $50 to $1,200 per component tested. The extent of the need for SOPs and methods validation may also be greatly reduced. We estimate that large drug manufacturers that manufacture in-house investigational drugs used in phase 1 clinical trials could potentially save between 24 to 40 hours per IND[2]. In addition, the clarifications we have made could lead some large firms to produce in-house future investigational drugs for use in phase 1 clinical trials, rather than contracting the work out.

For previously described chemical manufacturers and laboratories, the requirements in this rule may increase the time required for developing SOPs for quality, process, and procedural controls and will be incurred on a recurring basis for each new product manufactured. There may also be an incremental increase in training costs to educate employees on the CGMP requirements. We estimate that an additional 12 to 24 hours may be required for these activities depending on the experience of the entity and its employees with our current CGMP rule.[3]

The facility that manufactures the investigational drugs used in phase 1 clinical trials is identified in the IND. We do not keep a database of these facilities and, therefore, we do not have a precise number of entities that might be affected by this final rule. To estimate the economic impact, we derived an estimate of the number affected annually based on the number of INDs we receive.

We receive an average of 1,410 INDs each year.[4] However, this rule would not apply to the majority of these INDs because they are for drug products that already have premarket approvals and, thus, are subject to part 211. To derive an estimate of the percentage of INDs that would be affected by this rule, we used the percentage of total new drug

[2] Eastern Research Group (1195), *Economic Threshold and Regulatory Flexibility Assessment of Proposed Changes to the Current Good Manufacturing Practice Regulations for Manufacturing, Processing, Packing, or Holding Drugs (21 CFR 210 and 211)*, submitted to the Office of Planning and Evaluation, FDA. Estimated hours to change minor and major SOPs for large establishments (p. 24, table 7).

[3] Eastern Research Group (1995), ibid., Estimated hours to change SOPs for small establishments.

[4] The annual number of INDs received varies from year to year; 1,410 is the mean of the total number of research and commercial INDs received by the Center for Drug Evaluation and Research and CBER between 2001 and 2005.

applications (NDAs) that were for new molecular entities (NMEs) and applied that percentage to the number of annual IND applications. Historically, about 30 percent of NDAs are for NMEs each year. Assuming the relationship would be the same for the INDs and that the number of INDs will remain at about 1,410, this rule would affect about 425 INDs per year. A firm may produce multiple drug products for phase 1 clinical trials in a given year and use different companies to manufacture each of these drugs. Therefore, we do not know how many individual entities would be affected by this rule each year.

The Small Business Administration (SBA) defines manufacturers of biologic drugs as small entities if they employ fewer than 500 people and other drug manufacturers as small if they employ fewer than 750 people. FDA estimates that about 65 percent of the entities that submit NDAs and biologics license applications to the agency meet SBA's definition of a small entity. We assume that the distribution of large to small entities that submit INDs would be about the same. Although many of the entities that produce investigational drugs used in phase 1 clinical trials are laboratories, they are usually part of much larger institutions and are not considered small under SBA's definition. All of the entities affected by this rule have personnel with the skills necessary to comply with the requirements.

Because we do not know the experience levels the affected entities have with our current CGMP requirements, we used the midpoint of the estimated ranges to estimate the potential recurring savings or costs.

Savings to large manufacturers from reduced SOP and validation requirements for phase 1 drug manufacturing in-house, assuming a time savings of 32 hours per application, a fully loaded wage rate of $46, [5] and 150 INDs per year (approximately 35 percent of 425) would total $220,800 per year or $1,472 per IND. This would be in addition to any other savings from decreased component testing.

The incremental average annual cost to chemical manufacturers and laboratories, assuming all would incur costs and assuming an average increase of 18 hours per application for writing SOPs and training, a fully loaded wage rate of $46, and 275 INDs (approximately 65 percent of 425) affected per year, would total $227,700 per year or $828 per IND.

Although we do not know the number and size distribution of the entities affected by this rule, the impact on them will be negligible and should actually reduce the compliance burden for some. Manufacturers of drug products for phase 1 clinical trials are currently required to manufacturer them using CGMP, but some of the requirements in part 211 are not applicable for the manufacture of small quantities used in phase 1 clinical trials. While exempting these products from part 211, the companion guidance clarifies FDA's thinking on how to manufacture phase 1 investigational drugs under CGMP and does not include recommendations that would increase the burden of compliance.

VII. Paperwork Reduction Act of 1995

This final rule contains no new information collection requirements that are subject to review by the Office of Management and Budget (OMB) under the Paperwork Reduction Act of 1995 (44 U.S.C. 3501–3520). Under the final rule, the production of human drug products, including biological drug products, intended for use in phase 1 clinical trials are exempted from complying with the requirements under part 211. Part 211 contains information collection requirements that are approved by OMB under control number 0910–0139. As explained in the following paragraph, the information collection requirements in part 211 are reduced in this final rule.

The OMB-approved hourly burden to comply with the information collection requirements in part 211 (OMB control number 0910–0139) is 848,625 hours. FDA estimates that, under the final rule, approximately 425 investigational drugs are exempted from complying with the requirements under part 211. Based on this number and the total number of drugs that are subject to part 211 (122,795), FDA estimates that the burden hours approved under OMB control number 0910–0139 will be reduced by approximately 2,936 hours (425/122,795 x 848,625). Thus, as a result of the final rule, the amended burden hours in OMB control number 0910–0139 are approximately 845,689 hours.

VIII. Environmental Impact

The agency has determined under 21 CFR 25.30(h) that this action is of a type that does not individually or cumulatively have a significant effect on the human environment. Therefore, neither an environmental assessment nor an environmental impact statement is required.

IX. Federalism

FDA has analyzed this final rule in accordance with the principles set forth in Executive Order 13132. FDA has determined that the rule does not contain policies that have substantial direct effects on the States, on the relationship between the National Government and the States, or on the distribution of power and responsibilities among the various levels of government. Accordingly, the agency has concluded that the rule does not contain policies that have federalism implications as defined in the Executive order and, consequently, a federalism summary impact statement is not required.

X. References

The following references have been placed on display in the Division of Dockets Management (see **ADDRESSES**), and may be seen by interested persons between 9 a.m. and 4 p.m., Monday through Friday. (FDA has verified the Web site addresses, but we are not responsible for any subsequent changes to the Web sites after this document publishes in the **Federal Register**.)

1. Wood, A.J.J., J. Darbyshire, ''Injury to Research Volunteers—The Clinical-Research Nightmare,'' *The New England Journal of Medicine*, 354:1869–1871, 2006.

2. Steinbrook, R., ''Protecting Research Subjects—The Crisis at Johns Hopkins,'' *The New England Journal of Medicine*, 346:716–720, 2002.

3. Savulescu, J., ''Harm, Ethics Committees and the Gene Therapy Death,'' *The Journal of Medical Ethics*, 27:148–150, 2001.

List of Subjects in 21 CFR Part 210

Drugs, Packaging and containers.

■ Therefore, under the Federal Food, Drug, and Cosmetic Act, and under authority delegated to the Commissioner of Food and Drugs, 21 CFR part 210 is amended as follows:

PART 210—CURRENT GOOD MANUFACTURING PRACTICE IN MANUFACTURING, PROCESSING, PACKING, OR HOLDING OF DRUGS; GENERAL

■ 1. The authority citation for 21 CFR part 210 continues to read as follows:

Authority: 21 U.S.C. 321, 351, 352, 355, 360b, 371, 374; 42 U.S.C. 216, 262, 263a, 264.

■ 2. In § 210.2, add paragraph (c) to read as follows:

§ 210.2 Applicability of current good manufacturing practice regulations.

* * * * *

[5] Bureau of Labor Statistics, *National Compensation Survey*, 2005. Wage rate is the average of the hourly rate for postsecondary chemistry teachers ($38.82) and postsecondary biochemistry teachers ($27.01) plus 40 percent to account for benefits and rounded to the nearest whole dollar, *www.bls.gov*, data accessed September 2006.

(c) An investigational drug for use in a phase 1 study, as described in § 312.21(a) of this chapter, is subject to the statutory requirements set forth in 21 U.S.C. 351(a)(2)(B). The production of such drug is exempt from compliance with the regulations in part 211 of this chapter. However, this exemption does not apply to an investigational drug for use in a phase 1 study once the investigational drug has been made available for use by or for the sponsor in a phase 2 or phase 3 study, as described in § 312.21(b) and (c) of this chapter, or the drug has been lawfully marketed. If the investigational drug has been made available in a phase 2 or phase 3 study or the drug has been lawfully marketed, the drug for use in the phase 1 study must comply with part 211.

Dated: July 9, 2008.

Jeffrey Shuren,

Associate Commissioner for Policy and Planning.

[FR Doc. E8–16011 Filed 7–14–08; 8:45 am]

BILLING CODE 4160–01–S

DEPARTMENT OF JUSTICE

Drug Enforcement Administration

28 CFR Part 0

[Docket No. DEA–310F]

Redelegation of Functions

AGENCY: Drug Enforcement Administration, Department of Justice.

ACTION: Final rule.

SUMMARY: This rule makes one revision to the Drug Enforcement Administration's (DEA) regulations concerning agency management. Additional personnel are authorized to sign and issue administrative subpoenas.

DATES: *Effective Date:* July 15, 2008.

FOR FURTHER INFORMATION CONTACT: Wendy H. Goggin, Chief Counsel, Drug Enforcement Administration, 8701 Morrissette Drive, Springfield, VA 22152, Telephone (202) 307–1000.

SUPPLEMENTARY INFORMATION: This Final Rule implements one change to Title 28, Code of Federal Regulations (CFR), Part 0 by adding three officials to the list of officials who may sign and issue administrative subpoenas pursuant to the Comprehensive Drug Abuse Prevention and Control Act of 1970, Public Law No. 91–513, 84 Stat. 1236 (1970), as amended (the Act), codified at 21 U.S.C. 801–971. In addition to the Attorney General and the DEA Administrator, the current list of such officials is set forth at 28 CFR, Chapter I, part 0, Appendix to Subpart R, Section 4. Title 21, U.S.C. 875 and 876, provide the authority to issue such subpoenas. By 28 CFR 0.100, the Attorney General has delegated this authority to issue administrative subpoenas in support of his functions and duties under the Act to the DEA Administrator. The DEA Administrator is permitted by 28 CFR 0.104 to redelegate this authority ''to any of [her] subordinates[.]''

By this Final Rule, DEA now extends this administrative subpoena authority to its senior officials overseas who often supervise investigations with leads back in the United States, *i.e.*, DEA's Regional Directors, Assistant Regional Directors, and Country Attachés. As Title 28 CFR, Chapter I, Part 0, Appendix to Subpart R, Section 4 is presently written, DEA Resident Agents in Charge and Special Agent Group Supervisors posted outside the United States have such authority while their superiors, *i.e.*, Regional Directors, Assistant Regional Directors, and Country Attachés, do not. The amendment to section 4 is designed, in part, to rectify this anomaly.

Title 28 CFR, Chapter I, Part 0, Appendix to Subpart R, Section 4 currently lists twelve categories of DEA and FBI officials who are empowered to sign and issue administrative subpoenas under 21 U.S.C. 875 and 876. To this list of senior officials DEA now adds its Regional Directors, Assistant Regional Directors, and Country Attachés. This is being done to rectify an oversight. While both DEA Resident Agents in Charge and Special Agent Group Supervisors posted outside the U.S. have authority to sign and issue such administrative subpoenas, unlike the case of Resident Agents in Charge and Special Agent Group Supervisors within the U.S., the superior officials (Regional Directors, Assistant Regional Directors, and Country Attachés) of such Resident Agents in Charge and Group Supervisors serving overseas have not heretofore been listed at Title 28 CFR, Chapter I, Part 0, Appendix to Subpart R, Section 4, as officials to whom the Administrator has redelegated her authority to sign and issue administrative subpoenas.

Regulatory Certifications

Administrative Procedure Act

This rule relates to a matter of agency management or personnel and is a rule of agency organization, procedure, and practice. As such, this rule is exempt from the usual requirements of prior notice and comment and a 30-day delay in effective date. *See* 5 U.S.C. 553(a)(2), (b)(3)(A), (d)(3).

Regulatory Flexibility Act

The Acting Administrator, in accordance with the Regulatory Flexibility Act, 5 U.S.C. 601–612, has reviewed this rule, and by approving it, certifies that it will not have a significant economic impact on a substantial number of small entities because it pertains to personnel and administrative matters affecting the Drug Enforcement Administration. Further, a Regulatory Flexibility Analysis was not required to be prepared for this final rule because the Drug Enforcement Administration was not required to publish a general notice of proposed rulemaking for this matter.

Executive Order 12866

This rule has been drafted and reviewed in accordance with Executive Order 12866, Regulatory Planning and Review, section 1(b), Principles of Regulation. This rule is limited to agency organization, management and personnel as described by Executive Order 12866 section (3)(d)(3) and, therefore, is not a ''regulation'' or ''rule'' as defined by that Executive Order. Accordingly, this rule has not been reviewed by the Office of Management and Budget.

Executive Order 12988

This regulation meets the applicable standards set forth in sections 3(a) and 3(b)(2) of Executive Order 12988, Civil Justice Reform.

Executive Order 13132

This rule will not have substantial direct effects on the States, on the relationship between the national government and the States, or on the distribution of power and responsibilities among the various levels of government. Therefore, in accordance with Executive Order 13132, Federalism, the Drug Enforcement Administration has determined that this rule does not have sufficient federalism implications to warrant the preparation of a federalism summary impact statement.

Unfunded Mandates Reform Act of 1995

This rule will not result in the expenditure by State, local, and tribal governments, in the aggregate, or by the private sector, of $120 million or more (adjusted for inflation) in any one year, and it will not significantly or uniquely affect small governments. Therefore, no actions are necessary under the provisions of the Unfunded Mandates

Reform Act of 1995, 2 U.S.C. 1501 *et seq.*

Congressional Review Act

This rule is not a major rule as defined by section 251 of the Small Business Regulatory Enforcement Fairness Act of 1996, 5 U.S.C. 804 (Congressional Review Act). This rule will not result in an annual effect on the economy of $100 million or more; a major increase in costs or prices; or significant adverse effects on competition, employment, investment, productivity, innovation, or the ability of United States-based companies to compete with foreign-based companies in domestic and export markets.

The Drug Enforcement Administration has determined that this action is a rule relating to agency organization, procedure or practice that does not substantially affect the rights or obligation of non-agency parties and, accordingly, is not a ''rule'' as that term is used by the Congressional Review Act (Subtitle E of the Small Business Regulatory Enforcement Fairness Act of 1966). Therefore, the reporting requirement of 5 U.S.C. 801 does not apply.

List of Subjects in 28 CFR Part 0

Authority delegations (Government agencies), Government employees, Organization and functions (Government agencies), Privacy, Reporting and recordkeeping requirements, Whistleblowing.

■ Accordingly, and for the reasons set forth above, 28 CFR Part 0 is amended as follows:

PART 0—ORGANIZATION OF THE DEPARTMENT OF JUSTICE [AMENDED]

■ 1. The authority citation for Part 0 continues to read as follows:

Authority: 5 U.S.C. 301; 28 U.S.C. 509, 510, 515–519.

■ 2. In section 4 of the Appendix to Subpart R, paragraph (a) is revised to read as follows:

Appendix to Subpart R of Part 0—Redelegation of Functions

Sec. 4. Issuance of subpoenas. (a) The Chief Inspector of the DEA; the Deputy Chief Inspectors and Associate Deputy Chief Inspectors of the Office of Inspections and the Office of Professional Responsibility of the DEA; all Special Agents-in-Charge of the DEA and the FBI; DEA Inspectors assigned to the Inspection Division; DEA Associate Special Agents-in-Charge; DEA and FBI Assistant Special Agents-in-Charge; DEA Resident Agents-in-Charge; DEA Diversion Program Managers; FBI Supervisory Senior Resident Agents; DEA Special Agent Group Supervisors; those FBI Special Agent Squad Supervisors who have management responsibility over Organized Crime/Drug Program Investigations; and DEA Regional Directors, Assistant Regional Directors, and Country Attachés, are authorized to sign and issue subpoenas with respect to controlled substances, listed chemicals, tableting machines or encapsulating machines under 21 U.S.C. 875 and 876 in regard to matters within their respective jurisdictions.

* * * * *

Dated: July 1, 2008.

Michele M. Leonhart,

Acting Administrator.

[FR Doc. E8–16012 Filed 7–14–08; 8:45 am]

BILLING CODE 4410–09–P

PENSION BENEFIT GUARANTY CORPORATION

29 CFR Parts 4022 and 4044

Benefits Payable in Terminated Single-Employer Plans; Allocation of Assets in Single-Employer Plans; Interest Assumptions for Valuing and Paying Benefits

AGENCY: Pension Benefit Guaranty Corporation.

ACTION: Final rule.

SUMMARY: The Pension Benefit Guaranty Corporation's regulations on Benefits Payable in Terminated Single-Employer Plans and Allocation of Assets in Single-Employer Plans prescribe interest assumptions for valuing and paying benefits under terminating single-employer plans. This final rule amends the regulations to adopt interest assumptions for plans with valuation dates in August 2008. Interest assumptions are also published on the PBGC's Web site (*http://www.pbgc.gov*).

DATES: Effective August 1, 2008.

FOR FURTHER INFORMATION CONTACT: Catherine B. Klion, Manager, Regulatory and Policy Division, Legislative and Regulatory Department, Pension Benefit Guaranty Corporation, 1200 K Street, NW., Washington, DC 20005, 202–326–4024. (TTY/TDD users may call the Federal relay service toll-free at 1–800–877–8339 and ask to be connected to 202–326–4024.)

SUPPLEMENTARY INFORMATION: The PBGC's regulations prescribe actuarial assumptions—including interest assumptions—for valuing and paying plan benefits of terminating single-employer plans covered by title IV of the Employee Retirement Income Security Act of 1974. The interest assumptions are intended to reflect current conditions in the financial and annuity markets.

Three sets of interest assumptions are prescribed: (1) A set for the valuation of benefits for allocation purposes under section 4044 (found in Appendix B to part 4044), (2) a set for the PBGC to use to determine whether a benefit is payable as a lump sum and to determine lump-sum amounts to be paid by the PBGC (found in Appendix B to part 4022), and (3) a set for private-sector pension practitioners to refer to if they wish to use lump-sum interest rates determined using the PBGC's historical methodology (found in Appendix C to part 4022).

This amendment (1) adds to Appendix B to part 4044 the interest assumptions for valuing benefits for allocation purposes in plans with valuation dates during August 2008, (2) adds to Appendix B to part 4022 the interest assumptions for the PBGC to use for its own lump-sum payments in plans with valuation dates during August 2008, and (3) adds to Appendix C to part 4022 the interest assumptions for private-sector pension practitioners to refer to if they wish to use lump-sum interest rates determined using the PBGC's historical methodology for valuation dates during August 2008.

For valuation of benefits for allocation purposes, the interest assumptions that the PBGC will use (set forth in Appendix B to part 4044) will be 6.05 percent for the first 20 years following the valuation date and 5.12 percent thereafter. These interest assumptions represent an increase (from those in effect for July 2008) of 0.10 percent for the first 20 years following the valuation date and 0.10 percent for all years thereafter.

The interest assumptions that the PBGC will use for its own lump-sum payments (set forth in Appendix B to part 4022) will be 3.25 percent for the period during which a benefit is in pay status and 4.00 percent during any years preceding the benefit's placement in pay status. These interest assumptions represent a decrease (from those in effect for July 2008) of 0.25 percent in the immediate annuity rate and are otherwise unchanged. For private-sector payments, the interest assumptions (set forth in Appendix C to part 4022) will be the same as those used by the PBGC for determining and paying lump sums (set forth in Appendix B to part 4022).

The PBGC has determined that notice and public comment on this amendment are impracticable and contrary to the public interest. This finding is based on the need to determine and issue new interest assumptions promptly so that the assumptions can reflect current market conditions as accurately as possible.

Because of the need to provide immediate guidance for the valuation and payment of benefits in plans with valuation dates during August 2008, the PBGC finds that good cause exists for making the assumptions set forth in this amendment effective less than 30 days after publication.

The PBGC has determined that this action is not a ''significant regulatory action'' under the criteria set forth in Executive Order 12866.

Because no general notice of proposed rulemaking is required for this amendment, the Regulatory Flexibility Act of 1980 does not apply. See 5 U.S.C. 601(2).

List of Subjects

29 CFR Part 4022

Employee benefit plans, Pension insurance, Pensions, Reporting and recordkeeping requirements.

29 CFR Part 4044

Employee benefit plans, Pension insurance, Pensions.

■ In consideration of the foregoing, 29 CFR parts 4022 and 4044 are amended as follows:

PART 4022—BENEFITS PAYABLE IN TERMINATED SINGLE-EMPLOYER PLANS

■ 1. The authority citation for part 4022 continues to read as follows:

Authority: 29 U.S.C. 1302, 1322, 1322b, 1341(c)(3)(D), and 1344.

■ 2. In appendix B to part 4022, Rate Set 178, as set forth below, is added to the table.

Appendix B to Part 4022—Lump Sum Interest Rates for PBGC Payments

* * * * *

Rate set	For plans with a valuation date		Immediate annuity rate (percent)	Deferred annuities (percent)				
	On or after	Before		i_1	i_2	i_3	n_1	n_2
*	*		*	*	*	*		*
178	08–1–08	09–1–08	3.25	4.00	4.00	4.00	7	8

■ 3. In appendix C to part 4022, Rate Set 178, as set forth below, is added to the table.

Appendix C to Part 4022—Lump Sum Interest Rates for Private-Sector Payments

* * * * *

Rate set	For plans with a valuation date		Immediate annuity rate (percent)	Deferred annuities (percent)				
	On or after	Before		i_1	i_2	i_3	n_1	n_2
*	*		*	*	*	*		*
178	08–1–08	09–1–08	3.25	4.00	4.00	4.00	7	8

PART 4044—ALLOCATION OF ASSETS IN SINGLE-EMPLOYER PLANS

■ 4. The authority citation for part 4044 continues to read as follows:

Authority: 29 U.S.C. 1301(a), 1320(b)(3), 1341, 1344, 1362.

■ 5. In appendix B to part 4044, a new entry for August 2008, as set forth below, is added to the table.

Appendix B to Part 4044—Interest Rates Used to Value Benefits

* * * * *

For valuation dates occurring in the month—	The values of i_t are:					
	i_t	for t =	i_t	for t =	i_t	for t =
* * *	*		*		*		*
August 2008	.0605	1–20	.0512	>20	N/A	N/A

Issued in Washington, DC, on this 8th day of July 2008.

Vincent K. Snowbarger,

Deputy Director for Operations, Pension Benefit Guaranty Corporation.

[FR Doc. E8–16150 Filed 7–14–08; 8:45 am]

BILLING CODE 7709–01–P

DEPARTMENT OF VETERANS AFFAIRS

38 CFR Part 3

RIN 2900–AM89

Eligibility Reporting Requirements

AGENCY: Department of Veterans Affairs.

ACTION: Final rule.

SUMMARY: This document amends the Department of Veterans Affairs (VA) adjudication regulations regarding eligibility verification reports for certain parents receiving dependency and indemnity compensation. This amendment is necessary to conform the regulation to statutory provisions.

EFFECTIVE DATE: This amendment is effective July 15, 2008.

FOR FURTHER INFORMATION CONTACT: Maya Ferrandino, Regulations Staff (211D), Compensation and Pension Service, Veterans Benefits

Administration, Department of Veterans Affairs, 810 Vermont Avenue, NW., Washington, DC 20420, (727) 319–5847. (This is not a toll-free number.)

SUPPLEMENTARY INFORMATION: VA has two income-based benefit programs: pension and parents' dependency and indemnity compensation (DIC). VA may require a beneficiary of these programs to submit an eligibility verification report (EVR) in order to determine or verify entitlement under these programs. *See* 38 U.S.C. 1315, 1506; 38 CFR 3.256, 3.277, 3.661. The authorizing statute for allowing VA to require an EVR from a parents' DIC beneficiary, section 1315(e), provides an exception for parents who have attained 72 years of age and have been paid DIC during two consecutive calendar years.

In the past, VA has interpreted section 1315(e) as allowing VA the discretion to continue requiring EVRs from this category of parents' DIC beneficiaries. *See* 60 FR 25877, 25877–78 (May 15, 1995). However, on current review, we have determined that the statute does not allow VA to require EVRs from this group, and we are, therefore, amending the implementing regulation, § 3.256(b)(3), to state that VA will not request an EVR from these beneficiaries. This regulatory amendment does not change the requirement that parents' DIC beneficiaries who have attained 72 years of age and have been paid DIC during two consecutive calendar years must report material changes in income to VA. *See* 38 U.S.C. 1315(e) and 38 CFR 3.256(a).

Administrative Procedures Act

This final rule is an interpretative rule and the changes made by this rule merely reflect VA's interpretation of statutory requirements. The primary purpose of the amendment is to implement VA's statutory interpretation of 38 U.S.C. 1315 and to align § 3.256 to the statute. Section 553(b) of title 5, U.S. Code, does not apply to interpretive rules. Accordingly, there is a basis for dispensing with prior notice and opportunity to comment. Moreover, under section 553(d), interpretive rules do not require 30 days prior notice before they may become effective. Therefore, because the amendment to § 3.256 is an interpretive rule, the amendment may have an immediate effect. Accordingly, there is a basis for dispensing with the delayed effective date provisions of 5 U.S.C. 553(d).

Paperwork Reduction Act

This document contains no provisions constituting a new collection of information under the Paperwork Reduction Act (44 U.S.C. 3501–3521). The Office of Management and Budget (OMB) assigns a control number for each collection of information it approves. VA may not sponsor, and a person is not required to respond to, a collection of information unless it displays a currently valid OMB control number. Control number 2900–0101 has been assigned for the collection of information under § 3.256.

The amendments to § 3.256 in this final rule remain within the scope of the approved collections of information. This document will not increase the information burden, nor is it a complete discontinuance because VA will continue to request EVRs from individuals who do not meet the exception requirements under section 1315(e). The amendments are a slight modification that applies to the narrow group of people who meet the exception. Any reduction in the burdens imposed by this approved collection will be identified and addressed in the extension request that VA must submit to OMB before July 31, 2008.

Regulatory Flexibility Act

The Secretary hereby certifies that this final rule will not have a significant economic impact on a substantial number of small entities as they are defined in the Regulatory Flexibility Act, 5 U.S.C. 601–612. This final rule would not affect any small entities. Only VA beneficiaries could be directly affected. Therefore, pursuant to 5 U.S.C. 605(b), this final rule is exempt from the initial and final regulatory flexibility analysis requirements of sections 603 and 604.

Executive Order 12866

Executive Order 12866 directs agencies to assess all costs and benefits of available regulatory alternatives and, when regulation is necessary, to select regulatory approaches that maximize net benefits (including potential economic, environmental, public health and safety, and other advantages; distributive impacts; and equity). The Executive Order classifies a ''significant regulatory action,'' requiring review by OMB unless OMB waives such review, as any regulatory action that is likely to result in a rule that may: (1) Have an annual effect on the economy of $100 million or more or adversely affect in a material way the economy, a sector of the economy, productivity, competition, jobs, the environment, public health or safety, or State, local, or tribal governments or communities; (2) create a serious inconsistency or otherwise interfere with an action taken or planned by another agency; (3) materially alter the budgetary impact of entitlements, grants, user fees, or loan programs or the rights and obligations of recipients thereof; or (4) raise novel legal or policy issues arising out of legal mandates, the President's priorities, or the principles set forth in the Executive Order.

The economic, interagency, budgetary, legal, and policy implications of this final rule have been examined and it has been determined not to be a significant regulatory action under Executive Order 12866.

Unfunded Mandates

The Unfunded Mandates Reform Act of 1995 requires, at 2 U.S.C. 1532, that agencies prepare an assessment of anticipated costs and benefits before issuing any rule that may result in the expenditure by State, local, and tribal governments, in the aggregate, or by the private sector, of $100 million or more (adjusted annually for inflation) in any year. This final rule would have no such effect on State, local, and tribal governments, or on the private sector.

Catalog of Federal Domestic Assistance Numbers and Titles

The Catalog of Federal Domestic Assistance program numbers and titles for this proposal are 64.102, Compensation for Service-Connected Deaths for Veterans' Dependents and 64.110, Veterans Dependency and Indemnity Compensation for Service-Connected Death.

List of Subjects in 38 CFR Part 3

Administrative practice and procedure, Claims, Disability benefits, Health care, Pensions, Radioactive materials, Veterans, Vietnam.

Approved: June 12, 2008.

Gordon H. Mansfield,

Deputy Secretary of Veterans Affairs.

■ For the reasons set forth in the preamble, 38 CFR part 3 is amended as follows:

PART 3—ADJUDICATION

Subpart A—Pension, Compensation, and Dependency and Indemnity Compensation

■ 1. The authority citation for part 3, subpart A, continues to read as follows:

Authority: 38 U.S.C. 501(a), unless otherwise noted.

■ 2. Revise § 3.256(b)(3) introductory text to read as follows:

§ 3.256 Eligibility reporting requirements.

* * * * *

(b) * * *

(3) Except for a parent who has attained 72 years of age and has been

paid dependency and indemnity compensation during two consecutive calendar years, the Secretary shall require an eligibility verification report from individuals receiving parents' dependency and indemnity compensation under the following circumstances:

* * * * *

[FR Doc. E8–15996 Filed 7–14–08; 8:45 am]

BILLING CODE 8320–01–P

ENVIRONMENTAL PROTECTION AGENCY

40 CFR Part 300

[EPA–HQ–SFUND–1989–0008, Notice 4; FRL–8691–8]

National Oil and Hazardous Substance Pollution Contingency Plan; National Priorities List

AGENCY: Environmental Protection Agency.

ACTION: Withdrawal of direct final Notice of Deletion.

SUMMARY: On June 13, 2008 EPA published a Notice of Intent to Delete (73 FR 33758) and a direct final Notice of Deletion (73 FR 33721) for the Fourth Street Abandoned Refinery Superfund Site from the National Priorities List. The EPA is withdrawing the Final Notice of Deletion due to adverse comments that were received during the public comment period. After consideration of the comments received, if appropriate, EPA will publish a Notice of Deletion in the **Federal Register** based on the parallel Notice of Intent to Delete and place a copy of the final deletion package, including a Responsiveness Summary, if prepared, in the Site repositories.

EFFECTIVE DATE: This withdrawal of the direct final action is effective as of *July 15, 2008.*

ADDRESSES:

Information Repositories: Comprehensive information on the Site, as well as the comments that we received during the comment period, are available in docket EPA–HQ–SFUND–1989–0008, Notice 4, accessed through the *http://www.regulations.gov* Web site. Although listed in the docket index, some information is not publicly available, *e.g.*, CBI or other information whose disclosure is restricted by statute. Certain other material, such as copyrighted material, will be publicly available only in hard copy. Publicly available docket materials are available either electronically in *http://www.regulations.gov* or in hard copy at:

U.S. EPA Online Library System at *http://www.epa.gov/natlibra/ols.htm*;

U.S. EPA Region 6, 1445 Ross Avenue, Suite 700, Dallas, Texas 75202–2733, (214) 665–6617, by appointment only Monday through Friday 9 a.m. to 12 p.m. and 1 p.m. to 4 p.m.;

Ralph Ellison Library, 2000 Northeast 23, Oklahoma City, OK 73111, (409) 643–5979, Monday through Wednesday 9 a.m. to 9 p.m., Thursday and Friday 9 a.m. to 6 p.m., Saturday 10 a.m. to 4 p.m.;

Oklahoma Department of Environmental Quality (ODEQ), 707 North Robinson, Oklahoma City, Oklahoma, 73101, (512) 239–2920, Monday through Friday 8 a.m. to 5 p.m.

FOR FURTHER INFORMATION CONTACT: Bartolome Canellas, Remedial Project Manager, U.S. Environmental Protection Agency, Region 6, 6SF–RL, 1445 Ross Avenue, Dallas, Texas 75202–2733, *canellas.bart@epa.gov* or (214) 665–6662 or 1–800–533–3508.

SUPPLEMENTARY INFORMATION:

List of Subjects in 40 CFR Part 300

Environmental protection, Air pollution control, Chemicals, Hazardous Waste, Hazardous substances, Intergovernmental relations, Penalties, Reporting and recordkeeping requirements, Superfund, Water pollution control, Water Supply.

Authority: 33 U.S.C. 1321(c)(2); 42 U.S.C. 9601–9657; E.O. 12777, 56 FR 54757, 3 CFR, 1991 Comp., p. 351; E.O. 12580, 52 FR 2923; 3 CFR, 1987 Comp., p. 193.

Dated: June 26, 2008.

Richard E. Greene,

Regional Administrator, Region 6.

Accordingly, the amendment to Table ''1'' of Appendix B to 40 CFR Part 300 to remove the entry ''Fourth Street Abandoned Refinery'', ''Oklahoma City, Oklahoma'' is withdrawn as of July 15, 2008.

[FR Doc. E8–16124 Filed 7–14–08; 8:45 am]

BILLING CODE 6560–50–P

ENVIRONMENTAL PROTECTION AGENCY

40 CFR Part 300

[EPA–HQ–SFUND–1989–0008, Notice 3; FRL–8691–9]

National Oil and Hazardous Substance Pollution Contingency Plan; National Priorities List

AGENCY: Environmental Protection Agency.

ACTION: Withdrawal of direct final Notice of Deletion.

SUMMARY: On June 13, 2008 EPA published a Notice of Intent to Delete (73 FR 33760) and a direct final Notice of Deletion (73 FR 33718) for the Double Eagle Refinery Co. from the National Priorities List. The EPA is withdrawing the Final Notice of Deletion due to adverse comments that were received during the public comment period. After consideration of the comments received, if appropriate, EPA will publish a Notice of Deletion in the **Federal Register** based on the parallel Notice of Intent to Delete and place a copy of the final deletion package, including a Responsiveness Summary, if prepared, in the Site repositories.

EFFECTIVE DATE: This withdrawal of the direct final action is effective as of *July 15, 2008.*

ADDRESSES:

Information Repositories: Comprehensive information on the Site, as well as the comments that we received during the comment period, are available in docket EPA–HQ–SFUND–1989–0008, Notice 3, accessed through the *http://www.regulations.gov* Web site. Although listed in the docket index, some information is not publicly available, e.g., CBI or other information whose disclosure is restricted by statute. Certain other material, such as copyrighted material, will be publicly available only in hard copy. Publicly available docket materials are available either electronically in *http://www.regulations.gov* or in hard copy at:

U.S. EPA Online Library System at *http://www.epa.gov/natlibra/ols.htm;*

U.S. EPA Region 6, 1445 Ross Avenue, Suite 700, Dallas, Texas 75202–2733, (214) 665–6617, by appointment only Monday through Friday 9 a.m. to 12 p.m. and 1 p.m. to 4 p.m.;

Ralph Ellison Library, 2000 Northeast 23, Oklahoma City, OK 73111, (409) 643–5979, Monday through Wednesday 9 a.m. to 9 p.m., Thursday and Friday 9 a.m. to 6 p.m., Saturday 10 a.m. to 4 p.m.;

Oklahoma Department of Environmental Quality (ODEQ), 707 North Robinson, Oklahoma City, Oklahoma, 73101, (512) 239–2920, Monday through Friday 8 a.m. to 5 p.m.

FOR FURTHER INFORMATION CONTACT: Bartolome Canellas, Remedial Project Manager, U.S. Environmental Protection Agency, Region 6, 6SF–RL, 1445 Ross Avenue, Dallas, Texas 75202–2733, *canellas.bart@epa.gov* or (214) 665–6662 or 1–800–533–3508.

SUPPLEMENTARY INFORMATION:

List of Subjects in 40 CFR Part 300

Environmental protection, Air pollution control, Chemicals, Hazardous

Waste, Hazardous substances, Intergovernmental relations, Penalties, Reporting and recordkeeping requirements, Superfund, Water pollution control, Water Supply.

Authority: 33 U.S.C. 1321(c)(2); 42 U.S.C. 9601–9657; E.O. 12777, 56 FR 54757, 3 CFR, 1991 Comp., p. 351; E.O. 12580, 52 FR 2923; 3 CFR, 1987 Comp., p. 193.

Dated: June 26, 2008.

Richard E. Greene,

Regional Administrator, Region 6.

Accordingly, the amendment to Table ''1'' of Appendix B to 40 CFR Part 300 to remove the entry ''Double Eagle Refinery Co.'', ''Oklahoma City, Oklahoma'' is withdrawn as of July 15, 2008.

[FR Doc. E8–16123 Filed 7–14–08; 8:45 am]

BILLING CODE 6560–50–P

DEPARTMENT OF HOMELAND SECURITY

Federal Emergency Management Agency

44 CFR Part 64

[Docket No. FEMA–8031]

Suspension of Community Eligibility

AGENCY: Federal Emergency Management Agency, DHS.

ACTION: Final rule.

SUMMARY: This rule identifies communities, where the sale of flood insurance has been authorized under the National Flood Insurance Program (NFIP), that are scheduled for suspension on the effective dates listed within this rule because of noncompliance with the floodplain management requirements of the program. If the Federal Emergency Management Agency (FEMA) receives documentation that the community has adopted the required floodplain management measures prior to the effective suspension date given in this rule, the suspension will not occur and a notice of this will be provided by publication in the **Federal Register** on a subsequent date.

DATES: *Effective Dates:* The effective date of each community's scheduled suspension is the third date (''Susp.'') listed in the third column of the following tables.

FOR FURTHER INFORMATION CONTACT: If you want to determine whether a particular community was suspended on the suspension date or for further information, contact David Stearrett, Mitigation Directorate, Federal Emergency Management Agency, 500 C Street, SW., Washington, DC 20472, (202) 646–2953.

SUPPLEMENTARY INFORMATION: The NFIP enables property owners to purchase flood insurance which is generally not otherwise available. In return, communities agree to adopt and administer local floodplain management aimed at protecting lives and new construction from future flooding. Section 1315 of the National Flood Insurance Act of 1968, as amended, 42 U.S.C. 4022, prohibits flood insurance coverage as authorized under the NFIP, 42 U.S.C. 4001 *et seq.*, unless an appropriate public body adopts adequate floodplain management measures with effective enforcement measures. The communities listed in this document no longer meet that statutory requirement for compliance with program regulations, 44 CFR part 59. Accordingly, the communities will be suspended on the effective date in the third column. As of that date, flood insurance will no longer be available in the community. However, some of these communities may adopt and submit the required documentation of legally enforceable floodplain management measures after this rule is published but prior to the actual suspension date. These communities will not be suspended and will continue their eligibility for the sale of insurance. A notice withdrawing the suspension of the communities will be published in the **Federal Register**.

In addition, FEMA has identified the Special Flood Hazard Areas (SFHAs) in these communities by publishing a Flood Insurance Rate Map (FIRM). The date of the FIRM, if one has been published, is indicated in the fourth column of the table. No direct Federal financial assistance (except assistance pursuant to the Robert T. Stafford Disaster Relief and Emergency Assistance Act not in connection with a flood) may legally be provided for construction or acquisition of buildings in identified SFHAs for communities not participating in the NFIP and identified for more than a year, on FEMA's initial flood insurance map of the community as having flood-prone areas (section 202(a) of the Flood Disaster Protection Act of 1973, 42 U.S.C. 4106(a), as amended). This prohibition against certain types of Federal assistance becomes effective for the communities listed on the date shown in the last column. The Administrator finds that notice and public comment under 5 U.S.C. 553(b) are impracticable and unnecessary because communities listed in this final rule have been adequately notified.

Each community receives 6-month, 90-day, and 30-day notification letters addressed to the Chief Executive Officer stating that the community will be suspended unless the required floodplain management measures are met prior to the effective suspension date. Since these notifications were made, this final rule may take effect within less than 30 days.

National Environmental Policy Act. This rule is categorically excluded from the requirements of 44 CFR part 10, Environmental Considerations. No environmental impact assessment has been prepared.

Regulatory Flexibility Act. The Administrator has determined that this rule is exempt from the requirements of the Regulatory Flexibility Act because the National Flood Insurance Act of 1968, as amended, 42 U.S.C. 4022, prohibits flood insurance coverage unless an appropriate public body adopts adequate floodplain management measures with effective enforcement measures. The communities listed no longer comply with the statutory requirements, and after the effective date, flood insurance will no longer be available in the communities unless remedial action takes place.

Regulatory Classification. This final rule is not a significant regulatory action under the criteria of section 3(f) of Executive Order 12866 of September 30, 1993, Regulatory Planning and Review, 58 FR 51735.

Executive Order 13132, Federalism. This rule involves no policies that have federalism implications under Executive Order 13132.

Executive Order 12988, Civil Justice Reform. This rule meets the applicable standards of Executive Order 12988.

Paperwork Reduction Act. This rule does not involve any collection of information for purposes of the Paperwork Reduction Act, 44 U.S.C. 3501 *et seq.*

List of Subjects in 44 CFR Part 64

Flood insurance, Floodplains.

■ Accordingly, 44 CFR part 64 is amended as follows:

PART 64—[AMENDED]

■ 1. The authority citation for part 64 continues to read as follows:

Authority: 42 U.S.C. 4001 *et seq.*; Reorganization Plan No. 3 of 1978, 3 CFR, 1978 Comp.; p. 329; E.O. 12127, 44 FR 19367, 3 CFR, 1979 Comp.; p. 376.

§ 64.6 [Amended]

■ 2. The tables published under the authority of § 64.6 are amended as follows:

State and location	Community No.	Effective date authorization/cancellation of sale of flood insurance in community	Current effective map date	Date certain Federal assistance no longer available in SFHAs
Region III				
Pennsylvania:				
Coal, Township of, Northumberland County.	421936	Aug. 12, 1974, Emerg; July 3, 1990, Reg; July 16, 2008, Susp.	July 17, 2008	July 16, 2008
Delaware, Township of, Northumberland County.	421010	Nov. 19, 1973, Emerg; Nov. 19, 1980, Reg; July 16, 2008, Susp.	.....do*	Do.
East Cameron, Township of, Northumberland County.	421937	Sept. 3, 1975, Emerg; Sept. 1, 1986, Reg; July 16, 2008, Susp.	.....do	Do.
East Chillisquaque, Township of, Northumberland County.	422599	Oct. 15, 1975, Emerg; May 4, 1987, Reg; July 16, 2008, Susp.	.....do	Do.
Herndon, Township of, Northumberland County.	420735	Dec. 6, 1973, Emerg; Aug. 1, 1979, Reg; July 16, 2008, Susp.	.....do	Do.
Jackson, Township of, Northumberland County.	421938	Sept. 24, 1974, Emerg; Aug. 15, 1979, Reg; July 16, 2008, Susp.	.....do	Do.
Jordan, Township of, Northumberland County.	421939	Nov., Emerg; Aug. 15, 1980, Reg; July 16, 2008, Susp.	.....do	Do.
Kulpmont, Borough of, Northumberland County.	420736	Feb. 1, 1974, Emerg; May 1, 1978, Reg; July 16, 2008, Susp.	.....do	Do.
Lewis, Township of, Northumberland County.	421940	Mar. 8, 1976, Emerg; Apr. 1, 1986, Reg; July 16, 2008, Susp.	.....do	Do.
Little Mahanoy, Township of, Northumberland County.	421015	Jan. 30, 1974, Emerg; Sept. 5, 1979, Reg; July 16, 2008, Susp.	.....do	Do.
Lower Augusta, Township of, Northumberland County.	421017	Jan. 28, 1974, Emerg; Aug. 1, 1979, Reg; July 16, 2008, Susp.	.....do	Do.
Lower Mahanoy, Township of, Northumberland County.	421941	July 25, 1975, Emerg; Aug. 2, 1982, Reg; July 16, 2008, Susp.	.....do	Do.
McEwensville, City of, Northumberland County.	421935	Feb. 14, 1983, Emerg; Sept. 1, 1986, Reg; July 16, 2008, Susp.	.....do	Do.
Milton, Borough of, Northumberland County.	425384	Apr. 9, 1971, Emerg; Mar. 10, 1972, Reg; July 16, 2008, Susp.	.....do	Do.
Mount Caramel, Borough of, Northumberland County.	420738	Dec. 17, 1973, Emerg; July 17, 1978, Reg; July 16, 2008, Susp.	.....do	Do.
Mount Caramel, Township of, Northumberland County.	421942	Oct. 24, 1974, Emerg; May 3, 1990, Reg; July 16, 2008, Susp.	.....do	Do.
Northumberland, Borough of, Northumberland County.	420739	June 6, 1974, Emerg; Feb. 2, 1977, Reg; July 16, 2008, Susp.	.....do	Do.
Point, Township of, Northumberland County.	421026	Nov. 19, 1973, Emerg; May 2, 1977, Reg; July 16, 2008, Susp.	.....do	Do.
Ralpho, Township of, Northumberland County.	421027	Nov. 19, 1973, Emerg; Feb. 15, 1979, Reg; July 16, 2008, Susp.	.....do	Do.
Riverside, Borough of, Northumberland County.	420740	Nov. 19, 1973, Emerg; Apr. 15, 1977, Reg; July 16, 2008, Susp.	.....do	Do.
Rockefeller, City of, Northumberland County.	421152	Apr. 12, 1974, Emerg; Apr. 1, 1986, Reg; July 16, 2008, Susp.	.....do	Do.
Rush, Township of, Northumberland County.	421943	Nov. 11, 1974, Emerg; Jan. 28, 1977, Reg; July 16, 2008, Susp.	.....do	Do.
Shamokin, City of, Northumberland County.	420741	Apr. 5, 1974, Emerg; Dec. 16, 1980, Reg; July 16, 2008, Susp.	.....do	Do.
Shamokin, Township of, Northumberland County.	421159	Apr. 23, 1974, Emerg; Mar. 5, 1990, Reg; July 16, 2008, Susp.	.....do	Do.
Snydertown, Borough of, Northumberland County.	420742	May 27, 1975, Emerg; Sept. 1, 1986, Reg; July 16, 2008, Susp.	.....do	Do.
Sunbury, City of, Northumberland County.	420743	Sept. 3, 1971, Emerg; July 18, 1977, Reg; July 16, 2008, Susp.	.....do	Do.
Turbot, Township of, Northumberland County.	420744	Mar. 16, 1973, Emerg; Aug. 15, 1979, Reg; July 16, 2008, Susp.	.....do	Do.
Upper Augusta, Township of, Northumberland County.	420745	Jan. 19, 1973, Emerg; May 2, 1977, Reg; July 16, 2008, Susp.	.....do	Do.
Upper Mahanoy, Township of, Northumberland County.	421944	Oct. 24, 1975, Emerg; Sept. 1, 1986, Reg; July 16, 2008, Susp.	.....do	Do.
Washington, Township of, Northumberland County.	421945	Nov. 7, 1975, Emerg; Dec. 15, 1978, Reg; July 16, 2008, Susp.	.....do	Do.

State and location	Community No.	Effective date authorization/cancellation of sale of flood insurance in community	Current effective map date	Date certain Federal assistance no longer available in SFHAs
Watsontown, Township of, Northumberland County.	420746	Nov. 19, 1973, Emerg; Jan. 2, 1980, Reg; July 16, 2008, Susp.	.....do	Do.
West Cameron, Township of, Northumberland County.	421946	Oct. 15, 1975, Emerg; Jan. 17, 1990, Reg; July 16, 2008, Susp.	.....do	Do.
West Chillisquaque, Township of, Northumberland County.	421033	Jan. 28, 1974, Emerg; Apr. 15, 1977, Reg; July 16, 2008, Susp.	.....do	Do.
Zerbe, Township of, Northumberland County.	421947	Aug. 20, 1974, Emerg; Jan. 17, 1990, Reg; July 16, 2008, Susp.	.....do	Do.
Region V				
Illinois:				
Chenoa, City of, McLean County	170492	Mar. 27, 1975, Emerg; June 11, 1976, Reg; July 16, 2008, Susp.	.....do	Do.
Colfax, City of, McLean County	170493	June 17, 1975, Emerg; Jan. 18, 2002, Reg; July 16, 2008, Susp.	.....do	Do.
Cooksville, Village of, McLean County ..	170494	July 1, 1975, Emerg; June 11, 1976, Reg; July 16, 2008, Susp.	.....do	Do.
Danvers, Village of, McLean County	170495	Aug. 7, 1975, Emerg; Aug. 19, 1986, Reg; July 16, 2008, Susp.	.....do	Do.
Downs, Village of, McLean County	171072	May 31, 2000, Emerg; Feb. 9, 2001, Reg; July 16, 2008, Susp.	.....do	Do.
Heyworth, Village of, McLean County ...	170497	Mar. 7, 1983, Emerg; Dec. 1, 1983, Reg; July 16, 2008, Susp.	.....do	Do.
Hudson, Village of, McLean County	170498	May 12, 1975, Emerg; June 11, 1976, Reg; July 16, 2008, Susp.	.....do	Do.
Leroy, City of, McLean County	170499	May 6, 1975, Emerg; May 2, 1980, Reg; July 16, 2008, Susp.	.....do	Do.
Lexington, City of, McLean County	170500	Aug. 10, 1998, Emerg; Feb. 9, 2001, Reg; July 16, 2008, Susp.	.....do	Do.
McLean, Village of, McLean County	170501	Mar. 15, 1976, Emerg; Sept. 30, 1976, Reg; July 16, 2008, Susp.	.....do	Do.
McLean County, Unincorporated Areas	170931	Sept. 19, 1979, Emerg; Dec. 18, 1985, Reg; July 16, 2008, Susp.	.....do	Do.
Normal, Town of, McLean County	170502	June 19, 1975, Emerg; Sept. 1, 1983, Reg; July 16, 2008, Susp.	.....do	Do.
Saybrook, Village of, McLean County ...	171074	____, Emerg; Feb. 24, 2003, Reg; July 16, 2008, Susp.	.....do	Do.
Towanda, Village of, McLean County ...	170504	May 12, 1975, Emerg; Sept. 4, 1987, Reg; July 16, 2008, Susp.	.....do	Do.
Region VIII				
South Dakota:				
Aurora, Town of, Brookings County	460051	Jan. 16, 2007, Emerg;_____, Reg; July 16, 2008, Susp.	.....do	Do.
Brookings, City of, Brookings County ...	460004	Apr. 16, 1974, Emerg; Oct. 17, 1978, Reg; July 16, 2008, Susp.	.....do	Do.
Brookings County, Unincorporated Areas.	460253	July 19, 1987, Emerg; Jan. 1, 1987, Reg; July 16, 2008, Susp.	.....do	Do.
Bruce, Town of, Brookings County	460005	Aug. 20, 1975, Emerg; Feb. 5, 1980, Reg; July 16, 2008, Susp.	.....do	Do.

*-do-=Ditto.
Code for reading third column: Emerg.—Emergency; Reg.—Regular; Susp.—Suspension.

Dated: July 1, 2008.

Michael K. Buckley,

Deputy Assistant Administrator for Mitigation, Department of Homeland Security, Federal Emergency Management Agency.

[FR Doc. E8–16013 Filed 7–14–08; 8:45 am]

BILLING CODE 9110–12–P

Proposed Rules

Federal Register
Vol. 73, No. 136
Tuesday, July 15, 2008

This section of the FEDERAL REGISTER contains notices to the public of the proposed issuance of rules and regulations. The purpose of these notices is to give interested persons an opportunity to participate in the rule making prior to the adoption of the final rules.

DEPARTMENT OF THE TREASURY

Internal Revenue Service

26 CFR Part 301

[REG–142680–06]

RIN 1545–BG16

Postponement of Certain Tax-Related Deadlines by Reason of Presidentially Declared Disaster or Terroristic or Military Actions

AGENCY: Internal Revenue Service (IRS), Treasury.

ACTION: Notice of proposed rulemaking.

SUMMARY: This document contains a proposed regulation that proposes to amend existing regulations issued under section 7508A of the Internal Revenue Code (Code). The purpose of the proposed regulation is to clarify rules relating to the postponement of certain tax-related acts by reason of a Presidentially declared disaster or terroristic or military action. The proposed regulation clarifies the scope of relief under section 7508A and specifies that interest may be suspended during the postponement period. These changes are necessary to reflect changes in the law made by the Victims of Terrorism Tax Relief Act and current IRS practice. The proposed regulation will affect taxpayers determined by the Secretary to be affected by a Presidentially declared disaster or terroristic or military action.

DATES: Written or electronically generated comments and requests for a public hearing must be received by October 14, 2008.

ADDRESSES: Send submissions to: CC:PA:LPD:PR (REG–142680–06), room 5203, Internal Revenue Service, PO Box 7604, Ben Franklin Station, Washington, DC 20044. Submissions may be hand-delivered Monday through Friday between the hours of 8 a.m. and 4 p.m. to CC:PA:LPD:PR (REG–142680–06), Courier's Desk, Internal Revenue Service, 1111 Constitution Avenue, NW., Washington DC, or sent electronically, via the Federal eRulemaking Portal at *www.regulations.gov* (IRS REG–142680–06).

FOR FURTHER INFORMATION CONTACT: Concerning the proposed regulation, Mary Ellen Keys (202) 622–4570; concerning submission of comments, Oluwafunmilayo Taylor, (202) 622–7180 (not toll-free numbers).

SUPPLEMENTARY INFORMATION:

Background

This document contains proposed amendments to the Procedure and Administration Regulations (26 CFR part 301). Section 7508A of the Internal Revenue Code (Code) relates to the postponement of certain tax-related acts by reason of Presidentially declared disaster or terroristic or military action. Section 7508A was added by section 911(a) of the Taxpayer Relief Act of 1997, Public Law 105–34 (111 Stat. 788, 877–78 (1997)) (the 1997 Act), which was effective for any period for performing an act that had not expired before December 5, 1997.

Section 7508A authorizes the Secretary to postpone the deadlines for the performance of certain tax-related acts for taxpayers determined to be affected by a Presidentially declared disaster or a terroristic or military action. Section 301.7508A–1 provides guidance for taxpayers seeking relief under section 7508A.

Since the publication of § 301.7508A–1 on December 14, 2000, section 7508A was amended by the Victims of Terrorism Tax Relief Act of 2001, Public Law 107–134 (115 Stat. 2427, 2433–35 (2002)) (the 2002 Act). The 2002 Act amended the statute by extending the time period during which the Secretary may postpone certain tax-related acts and allowing the Secretary to suspend the accrual of interest, penalties, additional amounts, or additions to the tax during the period of postponement. The proposed regulation incorporates amendments to section 7508A.

Explanation of Provisions

The proposed regulation reflects that the period of time the Secretary may postpone certain tax-related acts has been increased from 90 days to one year. Additionally, the proposed regulation reflects that the Secretary is authorized under section 7508A to suspend interest, penalties, additional amounts, and additions to tax which would normally accrue during the time the tax-related act is postponed. Before the 2002 Act, generally, a taxpayer was responsible for interest that accrued during the postponement period (with a limited exception under former section 6404(h) when the taxpayer received both an extension of time to file under section 6081 and an extension of time to pay under section 6161).

The proposed regulation sets forth how the IRS generally implements postponements of time under section 7508A. The proposed regulation provides, however, that the IRS may grant further relief to taxpayers under section 7508A by revenue ruling, revenue procedure, notice, announcement, news release or other guidance published in the Internal Revenue Bulletin, in addition to that relief provided by the proposed regulation.

The proposed regulation demonstrates that although specific tax-related acts may be due on different dates within the postponement period, the acts may be postponed under section 7508A until the last day of the period. Under the proposed regulation, when an affected taxpayer is required to perform a tax-related act by a due date that falls within the postponement period, the taxpayer is entitled to postponement of the act and is eligible for relief from interest, penalties, additional amounts, and additions to tax during the postponement period.

The proposed regulation provides that the postponement period under section 7508A runs concurrently with extensions of time to file or pay, if any, under other sections of the Code. Thus, when the original due date falls within the postponement period, an affected taxpayer has until the last day of the postponement period to file for an extension of time to file or pay, but any resulting extension runs from the original due date.

The proposed regulation also provides that, where the extended due date, but not the original due date, falls within the postponement period, relief under section 7508A is specific to the type of extension received. Thus, an affected taxpayer who received an extension of time to file, but not an extension of time to pay, is eligible for a postponement of time to file and relief from penalties relating to the failure to file. The

taxpayer is not eligible for penalty and interest relief relating to the failure to pay, as the payment due date was not extended.

The regulation also clarifies that a postponement of time under section 7508A to perform a tax-related act does not extend the due date to perform the act, but instead, merely allows the IRS to disregard a time period of up to one year for performance of the act.

Proposed Effective Date

The regulation, as proposed, applies to Presidentially declared disasters or terroristic or military actions occurring on or after the date of publication of a Treasury decision adopting these rules as final regulations in the **Federal Register**.

Special Analyses

It has been determined that this Treasury decision is not a significant regulatory action as defined in Executive Order 12866. Therefore, a regulatory assessment is not required. It has been determined that section 553(b) of the Administrative Procedure Act (5 U.S.C. chapter 5) does not apply to this regulation. The regulation does not impose a collection of information requirement on small business entities, thus the Regulatory Flexibility Act (5 U.S.C. chapter 6) does not apply. Pursuant to section 7805(f) of the Code, this regulation has been submitted to the Chief Counsel for Advocacy of the Small Business Administration for comment on its impact on small business.

Comments and Requests for a Public Hearing

Before this proposed regulation is adopted as a final regulation, consideration will be given to any written (a signed original and eight (8) copies) and electronic comments that are submitted timely to the IRS. All comments will be available for public inspection and copying. A public hearing will be scheduled if requested in writing by any person that timely submits comments. If a public hearing is scheduled, notice of the date, time, and place for the public hearing will be published in the **Federal Register**.

Drafting Information

The principal authors of this proposed regulation are Melissa Quale and Mary Ellen Keys of the Office of the Associate Chief Counsel (Procedure and Administration).

List of Subjects in 26 CFR Part 301

Employment taxes, Estate taxes, Excise taxes, Gift taxes, Income taxes, Penalties, Reporting and recordkeeping requirements.

Amendments to the Regulations

Accordingly, 26 CFR part 301 is proposed to be amended as follows:

PART 301—PROCEDURE AND ADMINISTRATION

Paragraph 1. The authority citation for part 301 continues to read in part as follows:

Authority: 26 U.S.C. 7805 * * *

Par. 2. Section 301.7508A–1 is amended by

1. Revising the section heading of paragraphs (b) and (e).
2. Adding paragraph (d)(3).
3. Removing paragraph (f) and redesignating paragraphs (g) and (h) as paragraphs (f) and (g), respectively, and revising them.

The revisions and addition read as follows.

§ 301.7508A–1 Postponement of certain tax-related deadlines by reasons of a Presidentially declared disaster or terroristic or military action.

* * * * *

(b) *Postponed deadlines*—(1) *In general*. In the case of a taxpayer determined by the Secretary to be affected by a Presidentially declared disaster (as defined in section 1033(h)(3)) or a terroristic or military action (as defined in section 692(c)(2)), the Secretary may specify a postponement period (as defined in paragraph (d)(1) of this section) of up to one year that may be disregarded in determining under the internal revenue laws, in respect of any tax liability of the affected taxpayer (as defined in paragraph (d)(1) of this section)—

(i) Whether any or all of the acts described in paragraph (c) of this section were performed within the time prescribed;

(ii) The amount of interest, penalty, additional amount, or addition to the tax; and

(iii) The amount of credit or refund.

(2) *Effect of postponement period*. When an affected taxpayer is required to perform a tax-related act by a due date that falls within the postponement period, the affected taxpayer is eligible for postponement of time to perform the act until the last day of the period. The affected taxpayer is eligible for relief from interest, penalties, additional amounts, or additions to tax during the postponement period.

(3) *Interaction between postponement period and extensions of time to file or pay*—(i) *In general*. The postponement period under section 7508A runs concurrently with extensions of time to file and pay, if any, under other sections of the Internal Revenue Code.

(ii) *Original due date prior to, but extended due date within, the postponement period*. When the original due date precedes the first day of the postponement period and the extended due date falls within the postponement period, the following rules apply. If an affected taxpayer received an extension of time to file, filing will be timely on or before the last day of the postponement period, and the taxpayer is eligible for relief from penalties or additions to tax related to the failure to file during the postponement period. Similarly, if an affected taxpayer received an extension of time to pay, payment will be timely on or before the last day of the postponement period, and the taxpayer is eligible for relief from interest, penalties, additions to tax and additional amounts related to the failure to pay during the postponement period.

(4) *Due date not extended*. The postponement of the deadline of a tax-related act does not extend the due date for the act, but merely allows the IRS to disregard a time period of up to one year for performance of the act. To the extent that other statutes may rely on the date a return is due to be filed, the postponement period will not change the due date of the return.

(5) *Additional relief*. The rules of this paragraph (b) demonstrate how the IRS generally implements section 7508A. The IRS may determine, however, that additional relief to taxpayers is appropriate and may provide additional relief to the extent allowed under section 7508A. To the extent that the IRS grants additional relief, the IRS will provide specific guidance on the scope of relief in the manner provided in paragraph (e) of this section.

* * * * *

(d) * * *

(3) *Postponement period* means the period of time (up to one year) that the IRS postpones deadlines for performing tax-related acts under section 7508A.

(e) *Notice of postponement of certain acts*. If a tax-related deadline is postponed under section 7508A and this section, the IRS will publish a revenue ruling, revenue procedure, notice, announcement, news release, or other guidance in the Internal Revenue Bulletin (see § 601.601(d)(2) of this chapter) describing the acts postponed, the postponement period, and the location of the covered disaster area. Guidance under this paragraph (e) will be published as soon as practicable after the occurrence of a terroristic or military

action or declaration of a Presidentially declared disaster.

(f) *Examples.* The rules of this section are illustrated by the following examples:

Example 1. (i) Corporation X, a calendar year taxpayer, has its principal place of business in County M in State W. Pursuant to a timely filed request for extension of time to file, Corporation X's 2005 Form 1120, ''U.S. Corporation Income Tax Return,'' is due on September 15, 2006. Also due on September 15, 2006, is Corporation X's third quarter estimated tax payment for 2006. Corporation X's 2006 third quarter Form 720, ''Quarterly Federal Excise Tax Return,'' and third quarter Form 941, ''Employer's Quarterly Federal Tax Return,'' are due on October 31, 2006. In addition, Corporation X has an employment tax deposit due on September 15, 2006.

(ii) On September 1, 2006, a hurricane strikes County M in State W. On September 6, 2006, the President declares a disaster within the meaning of section 1033(h)(3). Also on September 6, 2006, the IRS determines that County M in State W is a covered disaster area and publishes guidance announcing that the time period for affected taxpayers to file returns, pay taxes and perform other time-sensitive acts falling on or after September 1, 2006, and on or before November 30, 2006, has been postponed to November 30, 2006, pursuant to section 7508A.

(iii) Because Corporation X's principal place of business is in County M, Corporation X is an affected taxpayer. Accordingly, Corporation X's 2005 Form 1120 will be timely if filed on or before November 30, 2006. Corporation X's 2006 third quarter estimated tax payment will be timely if made on or before November 30, 2006. In addition, pursuant to paragraph (c) of this section, Corporation X's 2006 third quarter Form 720 and third quarter Form 941 will be timely if filed on or before November 30, 2006. However, because deposits of taxes are excluded from the scope of paragraph (c) of this section, Corporation X's employment tax deposit is due on September 15, 2006. In addition, Corporation X's deposits relating to the third quarter Form 720 are not postponed. Absent reasonable cause, Corporation X is subject to the failure to deposit penalty under section 6656 and accrual of interest.

Example 2. The facts are the same as in *Example 1*, except that because of the severity of the hurricane the IRS determines that postponement of government acts is necessary under these circumstances and publishes guidance accordingly. During 2006, Corporation X's 2002 Form 1120 is being examined by the IRS. Pursuant to a timely filed request for extension of time to file, Corporation X timely filed its 2002 Form 1120 on September 17, 2003 (because March 15, 2003, falls on a Saturday, Corporation X's 2002 Form 1120 was due to be filed on March 17, 2003). Without application of this section, the statute of limitation on assessment for the 2002 income tax year will expire on September 17, 2006. However, pursuant to paragraph (c) of this section, assessment of tax is one of the government acts for which up to one year may be disregarded. Because September 17, 2006, falls within the period in which government acts are postponed, the statute of limitation on assessment for Corporation X's 2002 income tax will expire on November 30, 2006. Because Corporation X did not timely file an extension to pay, payment of its 2002 income tax was due on March 17, 2003. As such, Corporation X will be subject to the failure to pay penalty and related interest beginning on March 18, 2003. The due date for payment of Corporation X's 2002 income tax preceded the postponement period. Therefore, Corporation X is not entitled to the suspension of interest or penalties during the disaster period with respect to its 2002 income tax liability.

Example 3. The facts are the same as in *Example 2*, except that the examination of the 2002 taxable year was completed earlier in 2006, and on July 28, 2006, the IRS mailed a statutory notice of deficiency to Corporation X. Without application of this section, Corporation X has 90 days (or until October 26, 2006) to file a petition with the Tax Court. However, pursuant to paragraph (c) of this section, filing a petition with the Tax Court is one of the taxpayer acts for which a period of up to one year may be disregarded. Because Corporation X is an affected taxpayer, Corporation X's petition to the Tax Court will be timely if filed on or before November 30, 2006, the last day of the postponement period.

Example 4. (i) H and W, individual calendar year taxpayers, intend to file a joint Form 1040, ''U.S. Individual Income Tax Return,'' for the 2007 taxable year and are required to file a Schedule H, ''Household Employment Taxes.'' The joint return is due on April 15, 2008. H's and W's principal residence is in County M in State Q.

(ii) On April 2, 2008, a severe ice storm strikes County M. On April 5, 2008, the President declares a disaster within the meaning of section 1033(h)(3). Also on April 5, 2008, the IRS determines that County M in State Q is a covered disaster area and publishes guidance announcing that the time period for affected taxpayers to file returns, pay taxes and perform other time-sensitive acts falling on or after April 2, 2008, and on or before June 2, 2008, has been postponed to June 2, 2008.

(iii) Because H's and W's principal residence is in County M, H and W are affected taxpayers. April 15, 2008, the due date for the filing of H's and W's 2007 Form 1040 and Schedule H, falls within the postponement period described in the IRS published guidance. Thus, H's and W's return will be timely if filed on or before June 2, 2008. If H and W request an extension of time to file under section 6081 on or before June 2, 2008, the extension is deemed to have been filed by April 15, 2008. Thus, H's and W's return will be timely if filed on or before October 15, 2008.

(iv) April 15, 2008, is also the due date for the payment due on the return. This date falls within the postponement period described in the IRS published guidance. Thus, the payment of tax due with the return will be timely if paid on or before June 2, 2008, the last day of the postponement period. If H and W fail to pay the tax due on the 2007 Form 1040 by June 2, 2008, and do not receive an extension of time to pay under section 6161, H and W will be subject to failure to pay penalties and accrual of interest beginning on June 3, 2008.

Example 5. (i) H and W, residents of County D in State G, intend to file an amended return to request a refund of 2007 taxes. H and W timely filed their 2007 income tax return on April 15, 2008. Under section 6511(a), H's and W's amended 2007 tax return must be filed on or before April 15, 2011.

(ii) On April 1, 2011, an earthquake strikes County D. On April 5, 2011, the President declares a disaster within the meaning of section 1033(h)(3). Also on April 5, 2011, the IRS determines that County D in State G is a covered disaster area and publishes guidance announcing that the time period for affected taxpayers to file returns, pay taxes and perform other time-sensitive acts falling on or after April 1, 2011, and on or before September 28, 2011, has been postponed to September 28, 2011.

(iii) Under paragraph (c) of this section, filing a claim for refund of tax is one of the taxpayer acts for which up to one year may be disregarded. The postponement period for this disaster begins on April 1, 2011, and ends on September 28, 2011. Accordingly, H's and W's claim for refund for 2007 taxes will be timely if filed on or before September 28, 2011. Moreover, in applying the lookback period in section 6511(b)(2)(A), which limits the amount of the allowable refund, the period from September 28, 2011, back to April 1, 2011, is disregarded under paragraph (b)(1)(C) of this section. Thus, if the claim is filed on or before September 28, 2011, amounts deemed paid on April 15, 2008, under section 6513(b), such as estimated tax and tax withheld from wages, will have been paid within the lookback period of section 6511(b)(2)(A).

Example 6. (i) A is an unmarried, calendar year taxpayer whose principal residence is located in County W in State Q. A intends to file a Form 1040 for the 2007 taxable year. The return is due on April 15, 2008. A timely files Form 4868, ''Application for Automatic Extension of Time to File U.S. Individual Income Tax Return.'' Due to A's timely filing of Form 4868, the extended filing deadline for A's 2007 tax return is October 15, 2008. Because A timely requested an extension of time to file, A will not be subject to the failure to file penalty under section 6651(a)(1), if A files the 2007 Form 1040 on or before October 15, 2008. However, A failed to pay the tax due on the return by April 15, 2008, and did not receive an extension of time to pay under section 6161. Absent reasonable cause, A is subject to the failure to pay penalty under section 6651(a)(2) and accrual of interest.

(ii) On September 30, 2008, a blizzard strikes County W. On October 3, 2008, the President declares a disaster within the meaning of section 1033(h)(3). Also on October 3, 2008, the IRS determines that County W in State Q is a covered disaster area and announces that the time period for affected taxpayers to file returns, pay taxes

and perform other time-sensitive acts falling on or after September 30, 2008, and on or before December 2, 2008, has been postponed to December 2, 2008.

(iii) Because A's principal residence is in County W, A is an affected taxpayer. Because October 15, 2008, the extended due date to file A's 2007 Form 1040, falls within the postponement period described in the IRS's published guidance, A's return is timely if filed on or before December 2, 2008. However, the payment due date, April 15, 2008, preceded the postponement period. Thus, A will continue to be subject to failure to pay penalties and accrual of interest during the postponement period.

Example 7. (i) H and W, individual calendar year taxpayers, intend to file a joint Form 1040 for the 2007 taxable year. The joint return is due on April 15, 2008. After credits for taxes withheld on wages and estimated tax payments, H and W owe tax for the 2007 taxable year. H's and W's principal residence is in County J in State W.

(ii) On March 1, 2008, severe flooding strikes County J. On March 5, 2008, the President declares a disaster within the meaning of section 1033(h)(3). Also on March 5, 2008, the IRS determines that County J in State W is a covered disaster area and publishes guidance announcing that the time period for affected taxpayers to file returns, pay taxes and perform other time-sensitive acts falling on or after March 1, 2008, and on or before May 30, 2008, has been postponed to May 30, 2008.

(iii) Because H's and W's principal residence is in County J, H and W are affected taxpayers. Pursuant to the IRS's grant of relief under section 7508A, H and W received a postponement of the time to file the joint return and pay the tax due until May 30, 2008. Therefore, H's and W's joint return without extension is timely if filed on or before May 30, 2008. Similarly, H's and W's 2007 income taxes will be timely paid if paid on or before May 30, 2008.

(iv) On April 30, 2008, H and W timely file Form 4868, ''Application for Automatic Extension of Time to File U.S. Individual Income Tax Return.'' H's and W's extension will be deemed to have been filed on April 15, 2008. Thus, H's and W's 2007 income tax return is timely filed if filed on or before October 15, 2008.

(v) H and W did not request or receive an extension of time to pay. Therefore, pursuant to section 7508A, H's and W's 2007 income tax payment is due on May 30, 2008. H and W will be subject to the failure to pay penalty under section 6651(a)(2) and interest if H and W do not pay the tax due on the 2007 joint return on or before May 30, 2008. H and W will be subject to failure to pay penalties and accrual of interest beginning on May 31, 2008.

Example 8. The facts are the same as in *Example 7* except that H and W file the joint 2007 return and pay the tax due on June 15, 2008. Later, H and W discover additional deductions that would lower their taxable income for 2007. On June 15, 2011, H and W file a claim for refund under section 6511(a). The amount of H and W's overpayment exceeds the amount of taxes paid on June 15, 2008, the amount paid within three years of filing the claim. Section 6511(a) requires that a claim for refund be filed within three years from the time the return was filed or two years from the time the tax was paid, whichever period expires later. Section 6511(b)(2)(A) includes within the lookback period the period of an extension of time to file. Thus, payments that H and W made on or after May 30, 2008, would be eligible to be refunded. Since the period from April 15, 2008, to May 30, 2008, is disregarded, payments H and W made on April 15, 2008 (including withholding or estimated tax payments deemed to have been made on April 15, 2008), would also be included in the section 6511(b)(2)(A) lookback period. Thus, H and W are entitled to a full refund in the amount of their overpayment.

(g) *Proposed effective date.* The regulation, as proposed, applies to Presidentially declared disasters or terroristic or military actions occurring on or after the date of publication of the Treasury decision adopting these rules as final regulations in the **Federal Register**.

Linda E. Stiff,

Deputy Commissioner for Services and Enforcement.

[FR Doc. E8–15939 Filed 7–14–08; 8:45 am]

BILLING CODE 4830–01–P

DEPARTMENT OF THE TREASURY

Alcohol and Tobacco Tax and Trade Bureau

27 CFR Part 9

[Notice No. 85; Docket No. TTB–2008–0005]

RIN 1513–AB47

Proposed Expansion of the Paso Robles Viticultural Area (2008R–073P)

AGENCY: Alcohol and Tobacco Tax and Trade Bureau, Treasury.

ACTION: Notice of proposed rulemaking.

SUMMARY: The Alcohol and Tobacco Tax and Trade Bureau proposes to expand by 2,635 acres the existing 609,673-acre Paso Robles American viticultural area in San Luis Obispo County, California. If this change is approved, the expanded Paso Robles viticultural area would continue to lie entirely within San Luis Obispo County and within the multi-county Central Coast viticultural area. We designate viticultural areas to allow vintners to better describe the origin of their wines and to allow consumers to better identify wines they may purchase. We invite comments on this proposed change to our regulations.

DATES: We must receive written comments on or before September 15, 2008.

ADDRESSES: You may send comments to one of the following addresses:

- *http://www.regulations.gov* (via the online comment form for this notice as posted within Docket No. TTB–2008–0005 at ''Regulations.gov,'' the Federal e-rulemaking portal); or
- Director, Regulations and Rulings Division, Alcohol and Tobacco Tax and Trade Bureau, P.O. Box 14412, Washington, DC 20044–4412.

See the Public Participation section of this notice for specific instructions and requirements for submitting comments, and for information on how to request a public hearing.

You may view copies of this notice, selected supporting materials, and any comments we receive about this proposal at *http://www.regulations.gov* within Docket No. TTB–2008–0005. A link to that docket is posted on the TTB Web site at *http://www.ttb.gov/wine/wine_rulemaking.shtml* under Notice No. 85. You also may view copies of this notice, all related petitions, maps or other supporting materials, and any comments we receive about this proposal by appointment at the TTB Information Resource Center, 1310 G Street, NW., Washington, DC 20220. Please call 202–927–2400 to make an appointment.

FOR FURTHER INFORMATION CONTACT: N.A. Sutton, Regulations and Rulings Division, Alcohol and Tobacco Tax and Trade Bureau, 925 Lakeville St., No. 158, Petaluma, CA 94952; phone 415–271–1254.

SUPPLEMENTARY INFORMATION:

Background on Viticultural Areas

TTB Authority

Section 105(e) of the Federal Alcohol Administration Act (FAA Act), 27 U.S.C. 205(e), authorizes the Secretary of the Treasury to prescribe regulations for the labeling of wine, distilled spirits, and malt beverages. The FAA Act provides that these regulations should, among other things, prohibit consumer deception and the use of misleading statements on labels, and ensure that labels provide the consumer with adequate information as to the identity and quality of the product. The Alcohol and Tobacco Tax and Trade Bureau (TTB) administers the regulations promulgated under the FAA Act.

Part 4 of the TTB regulations (27 CFR part 4) allows the establishment of definitive viticultural areas and the use of their names as appellations of origin on wine labels and in wine advertisements. Part 9 of the TTB regulations (27 CFR part 9) contains the list of approved American viticultural areas.

Definition

Section 4.25(e)(1)(i) of the TTB regulations (27 CFR 4.25(e)(1)(i)) defines a viticultural area for American wine as a delimited grape-growing region distinguishable by geographical features, the boundaries of which have been recognized and defined in part 9 of the regulations. These designations allow vintners and consumers to attribute a given quality, reputation, or other characteristic of a wine made from grapes grown in an area to its geographic origin. The establishment of viticultural areas allows vintners to describe more accurately the origin of their wines to consumers and helps consumers to identify wines they may purchase. Establishment of a viticultural area is neither an approval nor an endorsement by TTB of the wine produced in that area.

Requirements

Section 4.25(e)(2) of the TTB regulations outlines the procedure for proposing an American viticultural area and provides that any interested party may petition TTB to establish a grape-growing region as a viticultural area. Petitioners may use the same procedure to request changes involving existing viticultural areas. Section 9.3(b) of the TTB regulations requires the petition to include—

- Evidence that the proposed viticultural area is locally and/or nationally known by the name specified in the petition;
- Historical or current evidence that supports setting the boundary of the proposed viticultural area as the petition specifies;
- Evidence relating to the geographic features, such as climate, soils, elevation, and physical features, that distinguish the proposed viticultural area from surrounding areas;
- A description of the specific boundary of the proposed viticultural area, based on features found on United States Geological Survey (USGS) maps; and
- A copy of the appropriate USGS map(s) with the proposed viticultural area's boundary prominently marked.

Paso Robles Expansion Petition

Background

Previous Petitions

On October 4, 1983, the Bureau of Alcohol, Tobacco and Firearms (ATF) published a final rule, T.D. ATF–148 (48 FR 45239), to establish the ''Paso Robles'' American viticultural area (AVA) in northern San Luis Obispo County, California (see 27 CFR 9.84). As established, the Paso Robles AVA was entirely within the Central Coast AVA (27 CFR 9.75) and, to the west, it bordered the much smaller York Mountain AVA (27 CFR 9.80). In 1983, the Paso Robles AVA contained approximately 5,000 acres of vineyards.

As established, the Paso Robles AVA was defined by the San Luis Obispo-Monterey county line in the north, the Cholame Hills to the east, and the Santa Lucia Mountains to the south and west. According to T.D. ATF–148, the Santa Lucia Mountains largely protect the Paso Robles AVA from the intrusion of marine air and fog from the Pacific Ocean, giving the Paso Robles AVA a drier and warmer summer time climate than regions to the west and south. The Paso Robles AVA also is characterized by day to night temperature changes of 40 to 50 degrees, annual rainfall of 10 to 25 inches, 600 to 1,000 foot elevations, and well-drained alluvial soils in terrace deposits.

Lacking a feasible way to use physical features, such as ridge lines, to define the Paso Robles AVA's boundary, the original petitioner largely used a series of township and range lines and point-to-point lines to delineate the AVA's boundary. The southern-most portion of the Paso Robles AVA was delineated to the south by the east-west T29S/T30S township boundary line and to the east by the north-south R13E/R14E range line.

On June 13, 1996, ATF published a final rule, T.D. ATF–377 (61 FR 29952) expanding the Paso Robles AVA along a portion of its western boundary. This expansion added 52,618 acres of land similar to that found in the original AVA. The expansion added to the AVA seven vineyards planted after the Paso Robles AVA's 1983 establishment, containing 235 acres of grapes. The Paso Robles AVA, as expanded, remained entirely within San Luis Obispo County and the Central Coast AVA, and this westerly expansion did not extend into the York Mountain AVA or change the AVA's original southern boundary.

Current Southern Expansion Petition

In 2007, the Paso Robles AVA Committee (PRAVAC) submitted a petition to TTB requesting a 2,635-acre expansion of the Paso Robles AVA. The petition states that the PRAVAC represents a broad cross-section of the Paso Robles wine industry and notes that its 59 grape-grower and winery members collectively own or manage over 10,000 acres of vineyards within the Paso Robles AVA.

The proposed expansion area is immediately south of the Paso Robles AVA's current southern-most boundary, which is delineated by the T29S/T30S township line, as shown on the 1:250,000-scale USGS San Luis Obispo map used to define the AVA's boundary. As noted in the petition, the Paso Robles AVA's current southern-most boundary line bisects the southern portion of the Santa Margarita Valley, leaving a significant portion of the valley's southern end outside the AVA boundary as currently defined. The proposed expansion would, therefore, bring most of the remainder of the Santa Margarita Valley within the AVA, as shown on the 1:24,000 USGS Lopez Mountain map submitted with the petition. (TTB notes that, while not used to formally define the AVA's boundary in the proposed regulatory text, the Lopez Mountain map provides significantly more geographical detail regarding the expansion area due to its smaller scale.)

The proposed southern expansion also lies totally within San Luis Obispo County and the existing Central Coast AVA, and it would not overlap or otherwise affect any other established or currently-proposed new AVA. According to the petition, the distinguishing features of the proposed expansion area, including its geological history, geomorphology, soils, topography, and climate, are similar to those found in the southern region of the original Paso Robles AVA.

Name Evidence

The petition states that the ''Paso Robles'' geographical name applies to the proposed southern expansion of the Paso Robles AVA due to the historic, geographic, commercial, and cultural ties between the Santa Margarita Valley and the Paso Robles region of San Luis Obispo County. This is due to that valley's northward orientation, which is enclosed to the south and west by the Santa Lucia Mountains. Historically, travel was easier going northward through the valley to the city of Paso Robles than it was going southward over the mountains to the city of San Luis Obispo. The petition also states that, due to the stated historic and other ties, local residents and members of the Paso Robles wine industry have assumed that the entire Santa Margarita Valley was within the original Paso Robles AVA boundary line and reference the area as such.

According to the petition, other sources also show the entire Santa Margarita Valley as falling within the Paso Robles region. For example, the Paso Style Living real estate Web site (*http://www.pasostyleliving.com/pages/pasoarea.htm*) describes the Santa Margarita area as ''the Southern edge of

Paso wine country.'' A 1928 soil survey map of the Paso Robles area submitted with the petition also shows the entire Santa Margarita Land Grant as being within the Paso Robles region. In addition, the ''1978 General Soil Map of the Paso Robles Area—San Luis Obispo County,'' published by the U.S. Department of Agriculture, Soil Conservation Service, University of California Agricultural Experiment Station, includes the proposed Paso Robles AVA expansion area within the Paso Robles region of the county.

Boundary Evidence

The proposed triangle-shaped expansion of the Paso Robles AVA would move its southern-most point approximately 2.6 miles south in order to encompass most of that portion of the Santa Margarita Valley currently not included within the AVA. Also, the proposed expansion area would increase the length of the commonly-shared eastern boundary of the Paso Robles and Central Coast AVAs by the same distance.

The petition describes the proposed expansion area as part of the ''cohesive geographical unit'' of the Santa Margarita Valley. Nestled between the Santa Lucia Range and the Salinas River, the Santa Margarita Valley lies on both sides of the Paso Robles AVA's existing southern boundary line. The petition describes the original Paso Robles AVA southern-most boundary line, which follows the T29S/T30 township line and which bisects the Santa Margarita Valley, as an ''imaginary, indiscernible boundary in the landscape, not defined by any topographic or other environmental parameters.''

As explained in T.D. ATF–148, the Paso Robles AVA ''is bounded on the west and south by the Santa Lucia Mountain range'' which protects the AVA ''from marine air intrusion and coastal fogs.'' The proposed southern expansion, the petition explains, would more closely align the Paso Robles AVA's southern-most boundary with the Santa Lucia Range by encompassing most of the portion of the Santa Margarita Valley that is currently outside the AVA. The petition explains that beyond the proposed expansion area to the south is the narrowed terminus of the Santa Margarita Valley, with steep terrain on three sides and inadequate groundwater and warmth to sustain commercial viticulture.

According to the petition, the viticultural history of the Santa Margarita Valley began with the arrival of Spanish missionaries, who, among other things, brought grapes and winemaking to the Paso Robles area over 200 years ago. Near present-day Santa Margarita, the missionaries built the Santa Margarita de Cortona Asistencia in 1787, which functioned as an outpost of the mission located at San Luis Obispo. See page 39 of the ''History of San Luis Obispo County, California, with Illustrations and Biographical Sketches of its Prominent Men and Pioneers'' (Thompson & West, 1883), by Myron Angel, (reprinted 1966, Howell-North Books, Berkeley, California), which was included with the petition. The Santa Margarita Asistencia served as a chapel, farmstead, and storehouse for grain grown in the valley.

In 1861, the land surrounding the Asistencia site was purchased by Mary and Martin Murphy, who also owned portions of other land grants within the Paso Robles region, according to page 68 of the Angel publication. Under the Martin's ownership, the petition states, the Santa Margarita area developed a strong attachment to the more commercialized Paso Robles area to its north. By 1889, the petition explains, an extension of the Southern Pacific Railroad ran south from Paso Robles along the Salinas River to the small settlement of Santa Margarita. See pages 34 and 75 of ''Rails Across the Ranchos,'' by Loren Nicholson, 1993. The USGS San Luis Obispo regional map shows the Southern Pacific Railway running south from the city of Paso Robles across the relatively flat valley to the town of Santa Margarita where it begins a twisting climb up and over the Santa Lucia Mountains to the city of San Luis Obispo.

In 2000, the petition explains, the Robert Mondavi Winery leased more than 1,000 acres in the southern Santa Margarita Valley for commercial vineyard development. This acreage is bisected by the current southern-most boundary of the Paso Robles AVA. At the time of the petition, vineyards covered 800 of the 1,000 acres, with plantings located on both sides of the existing Paso Robles AVA boundary line, according to the petition.

Distinguishing Features

The proposed expansion of the Paso Robles AVA relies on the Santa Margarita Valley's uniform topography, climate, soils, geologic history, and geomorphology. These geographical features, the petition notes, are the same throughout the valley, which is currently bisected by the existing Paso Robles AVA's southern-most boundary line. The Santa Margarita Valley, which makes up the portion of the Salinas River valley containing Santa Margarita and Rinconada Creeks, extends south from the city of Atascadero, through the town of Santa Margarita, and continues south-southeastward through the proposed expansion area, according to the USGS San Luis Obispo regional map and the petition.

Professor Deborah L. Elliott-Fisk, Ph.D, of the University of California, Davis, an expert on the geography and terroir of California and viticultural area designations, researched and provided the distinguishing features information used in the petition. According to the petition, Dr. Elliott-Fisk also coordinated the data and analyses supplied by meteorologist Donald Schukraft, Western Weather Group, LLC, and other experts.

Climate

The climate of the Paso Robles AVA as a whole, according to Dr. Elliott-Fisk, has smaller monthly temperature ranges and less continental influence than the inland areas further to the east, but is less influenced by Pacific marine air and fog than the coastal regions to the west due to the blocking effect of the Santa Lucia Mountains. As part of the larger Paso Robles region, the Santa Margarita Valley has climatic conditions similar to the AVA, Dr. Elliot-Fisk notes, and these conditions exist on both sides of the existing southern-most boundary of the AVA, which passes from west to east through the valley. Dr. Elliott-Fisk adds that other climate similarities found within the valley on either side of the existing AVA boundary include cold air drainage, cold air ponding under temperature inversions, and similar frost patterns, especially early in the growing season. Also, annual precipitation in the valley averages 29 inches, while regions to the east are drier and the coastal mountains to the west are wetter.

These climate similarities also are evidenced by various climate classification systems. For example, the petition states, the global scale climate classification system of Koppen, Geiger and Pohl (1953) labels the great majority of the Paso Robles region as a Mediterranean warm summer climate (Csb), while the region to the east has a Mediterranean hot summer climate (Csa).

Dr. Elliott-Fisk states that the Santa Margarita Valley's climate is classified as a cool region II climate of approximately 2,900 growing degree-days under the Winkler climate classification system, which is based on annual growing season heat accumulation. This classification is found on both sides of the existing southern-most Paso Robles AVA boundary. (As a measurement of heat

accumulation during the growing season, 1 degree day accumulates for each degree Fahrenheit that a day's mean temperature is above 50 degrees, which is the minimum temperature required for grapevine growth. In the Winkler system, climatic region I has less than 2,500 growing degree days per year; region II, 2,501 to 3,000; region III, 3,001 to 3,500; region IV, 3,501 to 4,000; and region V, 4,001 or more. See pages 61–64 of ''General Viticulture,'' by Albert J. Winkler, University of California Press, 1974.)

Regarding the southern end of the Santa Margarita Valley that lies beyond the proposed expansion, Dr. Elliott-Fisk explains that the steep topography east, south and west of the narrow valley floor causes increases in relief precipitation and evening settling of cold, dense air at the valley's terminus. Local farmers, the petition explains, state that air temperatures at the far southern end of the valley are too cold to produce quality wine grapes.

Geology

The geological features that characterize the southern region of the Paso Robles AVA continue across the AVA's southern-most boundary line and are found throughout the Santa Margarita Valley, including the proposed expansion area. Dr. Elliott-Fisk explains that the Salinas River originally formed the Santa Margarita Valley through a process of soil erosion and deposition, while the complex faulting of the Santa Lucia Range formed a graben basin that extends along the valley floor and crosses the existing Paso Robles AVA southern-most boundary line. Later, Dr. Elliott-Fisk notes, the Salinas River carved a new channel to the east through the soft Monterey Formation shales along the Rinconada Fault as the San Andreas Fault zone became more active. Rinconada Creek, a primary Salinas River tributary in the Santa Margarita Valley area, then deposited a series of broad alluvial fans and terraces across the older Salinas River alluvial fill, Dr. Elliott-Fisk explains. She notes that these alluvial terraces extend north and south of the current Paso Robles AVA boundary line and exist throughout the proposed expansion area.

To the east, south, and west of the proposed Paso Robles AVA expansion, Dr. Elliott-Fisk explains, the geology of the landscape is unsuitable for commercial production of wine grapes. She states that, to the east, granitic rocks on the mountainsides make the area difficult to farm, and the weathering and failure of near-surface rock makes road building difficult. Also, to the south, and at the narrowed southern terminus of the Santa Margarita Valley, Franciscan conglomerate rock underlies the shallow alluvium creating an environment lacking in adequate groundwater. To the west, the landscape includes massive units of the late Cretaceous Franciscan and Great Valley formations, consisting of hard marine sandstones and conglomerates on steep mountain slopes, making the terrain unsuitable for viticulture.

Soils

Similar soils exist on both sides of the current Paso Robles AVA southern boundary line, according to the current USDA soil survey for the Paso Robles Area of San Luis Obispo County (Lindsey, 1978). Climate, parent material, topography, and time, Dr. Elliott-Fisk states, all contribute to the soil type similarities that extend the length of the Santa Margarita Valley. The soils of the Santa Margarita Valley, Dr. Elliott-Fisk explains, include the deep gravelly loam soils of late-mid Quaternary age, grading into shallower clay loam soils against bedrock on the hillsides. Also, younger alluvial deposits dominate the flood plains of the valley's creeks.

Soils and terrain to the south, east, and west of the Paso Robles AVA proposed southern expansion are, however, unsuitable for commercial viticulture, Dr. Elliott-Fisk explains. To the south, the soils of the valley floor include clay loams with low water permeability and high water capacity with moderate shrink-swell potential, while the mountain slopes to the east and west have shallow top soil, small rooting zones for grapevines, and erosion potential, making those areas unsuitable for viticulture.

Evidence Summary

The PRAVAC petition, including Dr. Elliott-Fisk's discussion of the proposed expansion area's distinguishing features and a detailed letter from vineyard developer and manger Neil Roberts, emphasize that similar geological, geographical, and climatic conditions extend through the Santa Margarita Valley, which encompasses a portion of the existing Paso Robles AVA as well as the proposed expansion area. The landforms, topography, and geology features that form the Santa Margarita Valley, the petition explains, are similar both north and south of the existing Paso Robles AVA southern-most boundary line. Also, the valley's climate, as reflected by Winkler's degree-day values, and its soil types, as documented in the 1978 USDA soil survey for the Paso Robles Area of San Luis Obispo County, show strong similarities on both sides of the current Paso Robles AVA southern-most boundary line. The petition adds that vineyards are farmed the same way north and south of the current Paso Robles AVA boundary line through the valley and these vineyards grow the same varietals.

TTB Determination

TTB concludes that the petition to expand the Paso Robles American viticultural area merits consideration and public comment, as invited in this notice.

Boundary Description

See the narrative boundary description covering the petitioned-for viticultural area expansion in the proposed regulatory text amendment published at the end of this notice.

Maps

The petitioner provided the required map to document the proposed boundary change, and we list that map below in the proposed regulatory text amendment.

Impact on Current Wine Labels

The proposed expansion of the Paso Robles viticultural area will not affect currently approved wine labels. The approval of this proposed expansion may allow additional vintners to use ''Paso Robles'' as an appellation of origin on their wine labels. Part 4 of the TTB regulations prohibits any label reference on a wine that indicates or implies an origin other than the wine's true place of origin. For a wine to be eligible to use a viticultural area name as an appellation of origin or a term of viticultural significance in a brand name, at least 85 percent of the wine must be derived from grapes grown within the area represented by that name or other term, and the wine must meet the other conditions listed in 27 CFR 4.25(e)(3). Different rules apply if a wine has a brand name containing a viticultural area name or other viticulturally significant term that was used as a brand name on a label approved before July 7, 1986. See 27 CFR 4.39(i)(2) for details.

Public Participation

Comments Invited

We invite comments from interested members of the public on whether we should expand the Paso Robles viticultural area as described above. We are especially interested in comments concerning the similarity of the proposed expansion area to the currently existing Paso Robles

viticultural area. Please support your comments with specific information about the proposed expansion area's name, proposed boundaries, or distinguishing features.

Submitting Comments

You may submit comments on this notice by using one of the following two methods:

• *Federal e-Rulemaking Portal:* You may send comments via the online comment form posted with this notice within Docket No. TTB–2008–0005 on ''Regulations.gov,'' the Federal e-rulemaking portal, at *http://www.regulations.gov.* A direct link to that docket is available under Notice No. 85 on the TTB Web site at *http://www.ttb.gov/wine/wine_rulemaking.shtml.* Supplemental files may be attached to comments submitted via Regulations.gov. For complete instructions on how to use Regulations.gov, visit the site and click on ''User Guide'' under ''How to Use this Site.''

• *U.S. Mail:* You may send comments via postal mail to the Director, Regulations and Rulings Division, Alcohol and Tobacco Tax and Trade Bureau, P.O. Box 14412, Washington, DC 20044–4412.

Please submit your comments by the closing date shown above in this notice. Your comments must reference Notice No. 85 and include your name and mailing address. Your comments also must be made in English, be legible, and be written in language acceptable for public disclosure. We do not acknowledge receipt of comments, and we consider all comments as originals.

If you are commenting on behalf of an association, business, or other entity, your comment must include the entity's name as well as your name and position title. If you comment via Regulations.gov, please enter the entity's name in the ''Organization'' blank of the online comment form. If you comment via postal mail, please submit your entity's comment on letterhead.

You may also write to the Administrator before the comment closing date to ask for a public hearing. The Administrator reserves the right to determine whether to hold a public hearing.

Confidentiality

All submitted comments and attachments are part of the public record and subject to disclosure. Do not enclose any material in your comments that you consider to be confidential or inappropriate for public disclosure.

Public Disclosure

We will post, and you may view, copies of this notice, selected supporting materials, and any online or mailed comments we receive about this proposal within Docket No. TTB–2008–0005 on the Federal e-rulemaking portal, Regulations.gov, at *http://www.regulations.gov.* A direct link to that docket is available on the TTB Web site at *http://www.ttb.gov/wine/wine_rulemaking.shtml* under Notice No. 85. You may also reach the relevant docket through the Regulations.gov search page at *http://www.regulations.gov.* For instructions on how to use Regulations.gov, visit the site and click on ''User Guide'' under ''How to Use this Site.''

All posted comments will display the commenter's name, organization (if any), city, and State, and, in the case of mailed comments, all address information, including e-mail addresses. We may omit voluminous attachments or material that we consider unsuitable for posting.

You also may view copies of this notice, all related petitions, maps and other supporting materials, and any electronic or mailed comments we receive about this proposal by appointment at the TTB Information Resource Center, 1310 G Street, NW., Washington, DC 20220. You may also obtain copies at 20 cents per 8.5- x 11-inch page. Contact our information specialist at the above address or by telephone at 202–927–2400 to schedule an appointment or to request copies of comments or other materials.

Regulatory Flexibility Act

We certify that this proposed regulation, if adopted, would not have a significant economic impact on a substantial number of small entities. The proposed regulation imposes no new reporting, recordkeeping, or other administrative requirement. Any benefit derived from the use of a viticultural area name would be the result of a proprietor's efforts and consumer acceptance of wines from that area. Therefore, no regulatory flexibility analysis is required.

Executive Order 12866

This proposed rule is not a significant regulatory action as defined by Executive Order 12866. Therefore, it requires no regulatory assessment.

Drafting Information

N.A. Sutton of the Regulations and Rulings Division drafted this notice.

List of Subjects in 27 CFR Part 9

Wine.

Proposed Regulatory Amendment

For the reasons discussed in the preamble, we propose to amend title 27, chapter 1, part 9, Code of Federal Regulations, as follows:

PART 9—AMERICAN VITICULTURAL AREAS

1. The authority citation for part 9 continues to read as follows:

Authority: 27 U.S.C. 205.

Subpart C—Approved American Viticultural Areas

2. Section 9.84 is amended by revising paragraphs (b), (c)(7), and (c)(8), redesignating paragraphs (c)(9) and (c)(10) as (c)(10) and (c)(11), and adding a new paragraph (c)(9). The revisions and addition read as follows:

§ 9.84 Paso Robles.

* * * * *

(b) *Approved Maps.* The appropriate map for determining the boundary of the Paso Robles viticultural area is the United States Geological Survey 1:250,000-scale map of San Luis Obispo, California, 1956, revised 1969, shoreline revised and bathymetry added 1979.

(c) Boundaries. * * *

* * * * *

(7) Then in an easterly direction along the T.29S. and T.30S. line for approximately 3.1 miles to its intersection with the eastern boundary line of the Los Padres National Forest;

(8) Then in a southeasterly direction along the eastern boundary line of the Los Padres National Forest for approximately 4.1 miles to its intersection with the R.13E. and R.14E. line;

(9) Then in a northerly direction along the R.13E. and R.14E. line for approximately 8.7 miles to its intersection with the T.28S. and T.29S. line;

* * * * *

Signed: July 8, 2008.

John J. Manfreda,

Administrator.

[FR Doc. E8–16167 Filed 7–14–08; 8:45 am]

BILLING CODE 4810–31–P

Notices

Federal Register

Vol. 73, No. 136

Tuesday, July 15, 2008

This section of the FEDERAL REGISTER contains documents other than rules or proposed rules that are applicable to the public. Notices of hearings and investigations, committee meetings, agency decisions and rulings, delegations of authority, filing of petitions and applications and agency statements of organization and functions are examples of documents appearing in this section.

DEPARTMENT OF AGRICULTURE

Submission for OMB Review; Comment Request

July 10, 2008.

The Department of Agriculture has submitted the following information collection requirement(s) to OMB for review and clearance under the Paperwork Reduction Act of 1995, Public Law 104–13. Comments regarding (a) whether the collection of information is necessary for the proper performance of the functions of the agency, including whether the information will have practical utility; (b) the accuracy of the agency's estimate of burden including the validity of the methodology and assumptions used; (c) ways to enhance the quality, utility and clarity of the information to be collected; (d) ways to minimize the burden of the collection of information on those who are to respond, including through the use of appropriate automated, electronic, mechanical, or other technological collection techniques or other forms of information technology should be addressed to: Desk Officer for Agriculture, Office of Information and Regulatory Affairs, Office of Management and Budget (OMB), *OIRA_Submission@OMB.EOP.GOV* or fax (202) 395–5806 and to Departmental Clearance Office, USDA, OCIO, Mail Stop 7602, Washington, DC 20250–7602. Comments regarding these information collections are best assured of having their full effect if received within 30 days of this notification. Copies of the submission(s) may be obtained by calling (202) 720–8958.

An agency may not conduct or sponsor a collection of information unless the collection of information displays a currently valid OMB control number and the agency informs potential persons who are to respond to the collection of information that such persons are not required to respond to the collection of information unless it displays a currently valid OMB control number.

Animal and Plant Health Inspection Service

Title: Nomination Request Form; Animal Disease Training.

OMB Control Number: 0579–NEW.

Summary of Collection: Under the Animal Health Protection Act (7 U.S.C., 8301), the Animal and Plant Health Inspection Service (APHIS) is authorized among other things, to prohibit or restrict the importation and interstate movement of animals and animal products to prevent the introduction into and dissemination within the United States. The Professional Development Staff (PDS) of Veterinary Services within APHIS provides vital training to State, Industry, and University personnel which prepare them for animal disease response. To determine the need and demand for such courses, PDS must collect information from individuals who wish to attend training events facilitated by PDS.

Need and Use of the Information: Information will be collected from State, industry, and university personnel who desire to attend a PDS-sponsored training event. Prior to every PDS-facilitated event, respondents will submit a completed Nomination/Registration Request Form (VS Form 1–5) to the Regional Training Coordinators. Names, work addresses, work phone numbers, work e-mail addresses, agency/organization affiliation, and job title as well as supervisor and region approval is needed to produce participant rosters once course selections are made. Without the collection of this information, PDS cannot conduct training events to educate Federal, State and private veterinarians on eradication of diseases and sample collection.

Description of Respondents: Business or other for-profit; State, Local or Tribal Government.

Number of Respondents: 552.

Frequency of Responses: Recordkeeping; Reporting: On occasion.

Total Burden Hours: 712.

Animal & Plant Health Inspection Service

Title: Gypsy Moth Identification Worksheet.

OMB Control Number: 0579–0104.

Summary of Collection: Under the Plant Protection Act (7 U.S.C. 7701–7772), the Secretary of Agriculture either independently or in cooperation with the States, is authorized to carry out operations or measures to detect, eradicate, suppress, control, prevent, or retard the spread of plant pests new to the United States or not widely distributed throughout the United States. The Plant Protection and Quarantine Service (PPQ) of the Animal and Plant Health Inspection Service (APHIS) engage in detection surveys to monitor the presence of the European gypsy moth and the Asian gypsy moth. The European gypsy moth is one of the most destructive pests of fruit and ornamental trees as well as hardwood forests. The Asian gypsy moth is an exotic strain of gypsy moth that is closely related to the European variety already established in the U.S. This strain is considered to pose an even greater threat to trees and forested areas. In order to determine the presence and extent of a European gypsy moth or an Asian gypsy moth infestation, APHIS sets traps in high-risk areas to collect specimens.

Need and Use of the Information: APHIS will collect information from the Gypsy Moth Identification Worksheet, PPQ Form 305, to identify and track specific specimens that are sent for test based on DNA analysis. This information collected is vital to APHIS's ability to monitor, detect, and eradicate gypsy moth infestations, and the worksheet is completed only when traps are found to contain specimens. Information on the worksheet includes the name of the submitter, the submitter's agency, the date collected, the trap number, the trap's location (including the nearest port of entry), the number of specimens in the trap, and the date the specimen was sent to the laboratory.

Description of Respondents: State, Local or Tribal Government; Federal Government.

Number of Respondents: 120.

Frequency of Responses: Reporting; On occasion.

Total Burden Hours: 41.

Ruth Brown,

Departmental Information Collection Clearance Officer.

[FR Doc. E8–16163 Filed 7–14–08; 8:45 am]

BILLING CODE 3410–34–P

BROADCASTING BOARD OF GOVERNORS

Sunshine Act Meeting

DATE AND TIME: Wednesday, July 16, 2008, 2:45 p.m.–4 p.m.

PLACE: Cohen Building, Room 3321, 330 Independence Ave., SW., Washington, DC 20237.

CLOSED MEETING: The members of the Broadcasting Board of Governors (BBG) will meet in closed session to review and discuss a number of issues relating to U.S. Government-funded non-military international broadcasting. They will address internal procedural, budgetary, and personnel issues, as well as sensitive foreign policy issues relating to potential options in the U.S. international broadcasting field. This meeting is closed because if open it likely would either disclose matters that would be properly classified to be kept secret in the interest of foreign policy under the appropriate executive order (5 U.S.C. 552b.(c)(1)) or would disclose information the premature disclosure of which would be likely to significantly frustrate implementation of a proposed agency action. (5 U.S.C. 552b.(c)(9)(B)) In addition, part of the discussion will relate solely to the internal personnel and organizational issues of the BBG or the International Broadcasting Bureau. (5 U.S.C. 552b.(c)(2) and (6))

CONTACT PERSON FOR MORE INFORMATION: Persons interested in obtaining more information should contact Timi Nickerson Kenealy at (202) 203–4545.

Timi Nickerson Kenealy,

Acting Legal Counsel.

[FR Doc. 08–1432 Filed 7–11–08; 8:57 am]

BILLING CODE 8610–01–P

DEPARTMENT OF COMMERCE

International Trade Administration

[A–570–836]

Notice of Extension of Time Limit for Final Results of the Antidumping Duty Administrative Review: Glycine from the People's Republic of China

AGENCY: Import Administration, International Trade Administration, Department of Commerce.

EFFECTIVE DATE: July 15, 2008.

FOR FURTHER INFORMATION CONTACT: Erin Begnal or Toni Dach, AD/CVD Operations, Office 9, Import Administration, International Trade Administration, U.S. Department of Commerce, 14th Street and Constitution Avenue, NW, Washington, DC 20230; telephone: (202) 482–1442 and (202) 482–1655, respectively.

SUPPLEMENTARY INFORMATION:

Background

On April 4, 2008, the Department of Commerce (''the Department'') published the preliminary results of the antidumping duty administrative review of glycine from the People's Republic of China, covering the period March 1, 2006, through February 28, 2007. *See Glycine from the People's Republic of China: Preliminary Results of Antidumping Duty Administrative Review and Partial Rescission*, 73 FR 18503 (April 4, 2008).

Extension of Time Limits for Final Results

Pursuant to section 751(a)(3)(A) of the Tariff Act of 1930, as amended (''the Act''), and section 351.213(h)(1) of the Department's regulations, the Department shall issue the preliminary results of an administrative review within 245 days after the last day of the anniversary month of the date of publication of the order. The Act and the regulations further provide that the Department shall issue the final results of review within 120 days after the date on which the notice of the preliminary results was published in the **Federal Register**. See section Error! Main Document Only.751(a)(3)(A) of the Act and section 351.213(h)(1) of the Department's regulations. However, if the Department determines that it is not practicable to complete the review within this time period, section 751(a)(3)(A) of the Act and section 351.213(h)(2) of the Department's regulations allow the Department to extend the 245-day period to 365 days and the 120-day period to 180 days.

The Department extended the deadline for parties to submit case briefs and rebuttal briefs in order to address several issues raised by interested parties. As a result of these extensions and to allow more time to analyze issues raised in the case briefs and rebuttal briefs, the Department has determined that it is not practicable to complete the administrative review within the current time limit.

Section 751(a)(3)(A) of the Act and section 351.213(h)(2) of the Department's regulations allow the Department to extend the deadline for the final results of a review to a maximum of 180 days from the date on which the notice of the preliminary results was published. For the reasons noted above, the Department is extending the time limit for the completion of these final results by 30 days, from the current deadline of August 2, 2008, until no later than September 2, 2008.[1]

This notice is issued and published in accordance with sections 751(a)(3)(A) and 777(i) of the Act.

Dated: July 8, 2008.

Stephen J. Claeys,

Deputy Assistant Secretary for Import Administration.

[FR Doc. E8–16155 Filed 7–14–08; 8:45 am]

BILLING CODE 3510–DS–S

DEPARTMENT OF COMMERCE

International Trade Administration

[C–570–913]

Certain New Pneumatic Off-the-Road Tires From the People's Republic of China: Final Affirmative Countervailing Duty Determination and Final Negative Determination of Critical Circumstances

AGENCY: Import Administration, International Trade Administration, Department of Commerce.

SUMMARY: The Department of Commerce (the Department) has reached a final determination that countervailable subsidies are being provided to producers/exporters of certain new pneumatic off-the-road tires (OTR tires) from the People's Republic of China (PRC). For information on the final subsidy rates, *see* the ''Final Determination'' section of this notice.

DATES: *Effective Date:* July 15, 2008.

FOR FURTHER INFORMATION CONTACT: Mark Hoadley, Jun Jack Zhao, Nicholas Czajkowski, or Toni Page, AD/CVD Operations, Office 6, Import Administration, International Trade Administration, U.S. Department of Commerce, Room 7866, 14th Street and Constitution Avenue, NW., Washington, DC 20230; telephone: (202) 482–3148, (202) 482–1396, (202) 482–1395, or (202) 482–1398, respectively.

SUPPLEMENTARY INFORMATION:

Case History

Since the publication of the preliminary determination in the **Federal Register** on December 17, 2007, the following events have occurred. *See Certain New Pneumatic Off-the-Road Tires From the People's Republic of China: Preliminary Affirmative Countervailing Duty Determination,* 72 FR 71360 (December 17, 2007)

[1] An extension of 30 days from the current deadline of August 2, 2008, would result in a new deadline of September 1, 2008. However, since September 1, 2008, is a federal holiday, the deadline will be the next business day, September 2, 2008.

(*Preliminary Determination*). At the request of Petitioners,[1] the Department aligned the final determination in this countervailing duty investigation with the final determination in the companion antidumping duty investigation. *See Certain New Pneumatic Off-the-Road Tires from the People's Republic of China: Alignment of Final Countervailing Duty Determination With Final Antidumping Duty Determination,* 73 FR 3238 (January 17, 2008).

In the *Preliminary Determination,* we invited Petitioners, Bridgestone, and all of the Respondents[2] to comment on land use rights. We received comments from all parties regarding this issue on January 7, 2008. The Petitioners, Bridgestone and the Respondents also submitted factual information and arguments prior to the final determination based on various deadlines for submissions of factual information and/or arguments established by the Department subsequent to the *Preliminary Determination*.

On January 9, 2008, the Department issued supplemental questionnaires to the GOC, GTC, Starbright, and TUTRIC. We received responses to our January 9, 2008 supplemental questionnaire from all Respondents on February 6, 2008. We issued another supplemental questionnaire to all respondent parties on January 25, 2008 for which we received responses from all Respondents on February 15, 2008. The Department issued a supplemental questionnaire to the GOC on February 13, 2008 for which the GOC filed a response on February 27, 2008. The Department issued a supplemental questionnaire to GTC on February 15, 2008 for which GTC filed a response on February 28, 2008. The Department also issued supplemental questionnaires to TUTRIC and Starbright on February 19, 2008, pursuant to which the companies filed responses on February 27, 2008.

The Department received requests for a hearing from the Petitioners, Bridgestone, the GOC, Starbright, and GTC on January 9, 2008 and on January 16, 2008 from TUTRIC. The Department had scheduled the hearing for June 19, 2008; however, on June 16, 2008 the Department received a letter from Bridgestone stating that all interested parties agreed that a hearing was not necessary. *See* Letter to the Department, ''New Pneumatic Off-the-Road Tires From the People's Republic of China: Consent Withdrawal of All Hearing Requests'' (June 16, 2008), on file in the Department's Central Records Unit (CRU) (Room 1117 in the HCHB Building).

From March 3 through March 13, 2008, we conducted verification of the questionnaire responses submitted by the GOC, including the national, provincial, and local governments, GTC, and TUTRIC. The Department issued verification reports on April 22, 2008 and April 24, 2008. *See* Memorandum to Thomas Gilgunn, Program Manager, *Countervailing Duty Investigation: New Pneumatic Off-the-Road Tires from the People's Republic of China: Verification of the Questionnaire Responses Submitted by the Government of the People's Republic of China (GOC) (GOC Verification Report);* Memorandum to Thomas Gilgunn, Program Manager, *Countervailing Duty Investigation: New Pneumatic Off-the-Road Tires from the People's Republic of China: Verification of the Questionnaire Responses Submitted by GTC Co., Ltd. (GTC Verification Report);* Memorandum to Thomas Gilgunn, Program Manager, *Countervailing Duty Investigation: New Pneumatic Off-the-Road Tires from the People's Republic of China: Meetings with the Government of the Guizhou Province Regarding GTC Co., Ltd. and Affiliates (Guizhou Province Verification Report);* Memorandum to Thomas Gilgunn, Program Manager, *Countervailing Duty Investigation: New Pneumatic Off-the-Road Tires from the People's Republic of China: Verification of the Questionnaire Responses Submitted by Tianjin United Tire & Rubber International Co., Ltd. (TUTRIC Verification Report);* and Memorandum to Thomas Gilgunn, Program Manager, *Countervailing Duty Investigation: New Pneumatic Off-the-Road Tires from the People's Republic of China: Meetings with the Government of Tianjin Municipality Regarding Tianjin United Tire & Rubber International Co., Ltd. and Affiliates (Tianjin Government Verification Report).*

On March 7, 2008, the Department decided not to verify Starbright because the company had repeatedly declined to provide requested information. *See* Letter to Starbright, *Countervailing Duty Investigation: New Pneumatic Off-the-Road Tires from the People's Republic of China* (March 7, 2008), on file in the Department's CRU. On March 11 and March 12, 2008, Starbright and the GOC, respectively, filed letters objecting to the Department's decision. On March 12, 2008, Petitioners and Bridgestone filed letters stating that the Department should not verify Starbright. The Department held several meetings with Starbright officials and GOC officials. *See* Memoranda to the File, ''Ex-parte Meeting with Representatives of Hebei Starbright Tire Co., Ltd.'' (March 11, 2008), ''Meeting with Chinese Ministry of Commerce Bureau of Fair Trade Director General Li Ling'' (March 12, 2008), ''Ex-Parte Meeting with Representatives of Hebei Starbright Tire Co., Ltd.'' (March 24, 2008), on file in the Department's CRU.

After evaluating all of the parties' submissions and arguments on the matter, the Department stated that it would conduct a limited verification of Starbright's recurring subsidies received after Starbright's change in ownership. *See* Letter to Starbright, *Countervailing Duty Investigation of New Pneumatic Off-the-Road Tires from the People's Republic of China* (March 12, 2008). The Department then issued the GOC and Starbright a supplemental questionnaire providing them a final opportunity to provide the information previously requested. *See* the Department's questionnaires to the GOC and Starbright (March 24, 2008). The Department stated that it would reconsider its decision not to verify Starbright and the local governments that have jurisdiction over the company if Starbright and the GOC provided complete responses to the Department's March 24, 2008 questionnaire concerning Starbright's change in ownership. In the cover letter to the questionnaire, we stated that we needed the information regarding Starbright's purchase of Hebei Tire Co., Ltd. to analyze fully Starbright's claim that the sale at issue was at arm's length and for fair market value. The Department informed Starbright that, if the company or the GOC decided not to provide the information requested, the Department would use facts otherwise available with possible adverse inferences. *See* the Cover Letter of the Department's March 24, 2008 Questionnaire to Starbright. The GOC and Starbright filed responses to these questionnaires, respectively, on April 8 and April 9, 2008.

Based on our examination of these responses, the Department decided to verify. *See* Letter to the GOC, *Countervailing Duty Investigation: New Pneumatic Off-the-Road Tires from the People's Republic of China* (April 18, 2008) and Letter to Starbright, *Countervailing Duty Investigation: New*

[1] Titan Tire Corporation and United Steel, Paper and Forestry, Rubber, Manufacturing, Energy Allied Industrial and Service Workers International Union, AFL-CIO-CLC (collectively, Petitioners). The domestic interested party is Bridgestone Americas Holding, Inc. and its subsidiary, Bridgestone Firestone North America Tire, LLC (collectively, Bridgestone).

[2] The Government of The People's Republic of China (GOC), Guizhou Tire Co., Ltd. (GTC), Hebei Starbright Tire Co., Ltd. (Starbright), and Tianjin United Tire & Rubber International Co., Ltd. (TUTRIC) (collectively, Respondents).

Pneumatic Off-the-Road Tires from the People's Republic of China (April 21, 2008) to which the verification outlines were attached, on file in the Department's CRU. The Department then verified Starbright as well as the governments of Hebei province and the city of Xingtai from April 24 through May 1, 2008. We issued verification reports on May 13, 2008 and May 14, 2008. See Memorandum to Thomas Gilgunn, Program Manager, *Countervailing Duty Investigation: New Pneumatic Off-the-Road Tires from the People's Republic of China: Meetings with the Government of Hebei Province and Xingtai Municipality Regarding Hebei Starbright Tire Co., Ltd. (Starbright) and Hebei Tire Co., Ltd. (Hebei Tire) (Hebei Province Verification Report)* and Memorandum to Thomas Gilgunn, Program Manager, *Countervailing Duty Investigation: New Pneumatic Off-the-Road Tires from the People's Republic of China: Verification of the Questionnaire Responses Submitted by Hebei Starbright Tire Co., Ltd. (Starbright) (Starbright Verification Report).*

On May 2, 2008, we issued our post-preliminary analysis for certain programs for which the Department stated in the *Preliminary Determination* additional information was needed. *See* Memorandum to David M. Spooner, Assistant Secretary for Import Administration, *Countervailing Duty Investigation of New Pneumatic Off-the-Road Tires from the People's Republic of China; Post-Preliminary Analysis of Non-Tradable Share Reform; Provision of Water to FIEs for Less than Adequate Remuneration; Grants to the Tire Industry for Electricity; and Various Provincial/Municipal Programs* (May 2, 2008) (*Post-Preliminary Analysis*), on file in the Department's CRU. The Department then issued a post-preliminary analysis regarding the change in ownership for Starbright. *See* Memorandum to David M. Spooner, Assistant Secretary for Import Administration, *Countervailing Duty Investigation of Certain New Pneumatic Off-the-Road Tires (OTR Tires) from the People's Republic of China; Analysis of Change in Ownership* (May 28, 2008) *(CIO Memorandum).*

Due to the decision to conduct verification of Starbright, the Department set up two separate briefing schedules: one for all issues except Starbright-specific issues and one for Starbright issues. *See* Memorandum to the File, *Countervailing Duty Investigation of Certain New Pneumatic Off-the-Road Tires from the People's Republic of China: Briefing and Hearing Schedules* (April 3, 2008) and Memorandum to the File, *Countervailing Duty Investigation of Certain New Pneumatic Off-the-Road Tires from the People's Republic of China: Briefing and Hearing Schedules* (May 28, 2008). In accordance with the briefing schedules, we received case briefs from Petitioners, Bridgestone, the GOC, GTC, and TUTRIC on May 9 and 12, 2008. The same parties submitted rebuttal briefs on May 15, 2008. The Department then received case briefs regarding Starbright-specific issues on June 4 and June 5, 2008 from Petitioners, Bridgestone, the GOC, and Starbright. On June 6, 2008, the Department determined that Starbright's brief contained untimely new factual information and requested that Starbright submit replacement pages with all references to this information removed. *See* Letter to Starbright, *New Factual Information* (June 6, 2008). Starbright submitted replacement pages without the untimely filed new factual information on June 9, 2008. Petitioners, Bridgestone, the GOC, and Starbright submitted rebuttal briefs pertaining to Starbright-specific issues on June 9 and June 10, 2008.

On June 10, 2008, both Bridgestone and Starbright filed letters with the Department alleging that the other party had included new factual information on the record in both the case briefs and the rebuttal briefs. On June 13, 2008, the Department issued a memorandum to the file addressing all allegations of new factual information. *See* Memorandum to the File, *Various Allegations Concerning Case and Rebuttal Briefs Regarding Hebei Starbright Tire Co., Ltd. (Starbright),* on file in the Department's CRU. In the June 13, 2008 memorandum, the Department: (1) Determined that we would not address Petitioners' or Bridgestone's uncreditworthiness allegation against Starbright that both raised in their respective briefs; (2) determined that information in Starbright's rebuttal brief was not new factual information; (3) determined that information submitted by Bridgestone in its rebuttal brief was not new factual information; and (4) clarified that Bridgestone's comments regarding market distortions in its June 9, 2008 rebuttal brief were allowed as part of the arguments concerning whether the sale of Hebei Tire was for fair market value.

Period of Investigation

The period of investigation (POI) for which we are measuring subsidies is calendar year 2006.

Scope of the Investigation

The products covered by the scope of this investigation are new pneumatic tires designed for off-the-road (OTR) and off-highway use, subject to certain exceptions. In the *Preliminary Determination,* we stated that we had received comments on the scope of the investigation from a number of parties and that all comments raised by the parties would be addressed in the companion antidumping investigation. On May 14, 2008, the Department issued a memorandum regarding the scope of both the AD and CVD Investigations on OTR Tires from the PRC, addressing the scope comments submitted by multiple interested parties. *See Preliminary Determination: Comments on the Scope of the Investigations (Preliminary Scope Determination).*

In the *Preliminary Scope Determination,* we made certain modifications to the scope of the investigation and invited interested parties to comment on these modifications. Interested parties submitted comments on the *Preliminary Scope Determination* on May 22, 2008 and rebuttal comments on May 27, 2008. Based on these comments, we have made certain clarifications to the scope of the investigation. These clarifications, as well as a complete description of all products covered by the scope of this investigation, and a list of excluded products, are reflected in the *Final Scope of the Investigation* which is appended to this notice at Appendix I.

All comments submitted on the *Preliminary Scope Determination* are addressed in the *Scope Comments* section of the *Issues and Decision Memorandum for the Final Affirmative Countervailing Duty Determination: Certain New Pneumatic Off-the-Road Tires from the People's Republic of China (Issues and Decision Memorandum)*, which is issued concurrently with this notice.

Critical Circumstances

On March 11, 2008, Petitioners submitted a timely critical circumstances allegation. On April 22, 2008, the Department preliminarily determined that critical circumstances did not exist for imports of OTR tires from the PRC. *See Notice of Preliminary Negative Determination of Critical Circumstances: Certain New Pneumatic Off-the-Road Tires From the People's Republic of China,* 73 FR 21588 (April 22, 2008) (*Critical Circumstances Notice*). Pursuant to section 705(a)(2) of the Tariff Act of 1930, as amended (the

Act), in order for critical circumstances to exist, the Department must find that there are countervailable subsidies that are inconsistent with the World Trade Organization Agreement on Subsidies and Countervailing Measures (*SCM Agreement*) (*i.e.*, import substitution subsidies or export subsidies), and that there have been massive imports over a relatively short period (*i.e.*, whether there was a surge in imports). Based on our analyses of the results of verification and the comments submitted by the parties, we have determined that none of the respondents have received subsidies inconsistent with the *SCM Agreement.* We therefore need not reach the issue of whether there have been massive imports over a relatively short period of time. Since the requirements of section 705(a)(2) of the Act have not been met, we determine that critical circumstances do not exist with respect to imports of OTR tires from the PRC.

Analysis of Subsidy Programs and Comments Received

The subsidy programs under investigation and the issues raised by interested parties in their case briefs and rebuttal briefs on the *Preliminary Determination,* the *Post-Preliminary Analysis,* and the *CIO Memorandum,* are discussed in the *Issues and Decision Memorandum.* A list of the subsidy programs and of the issues that parties have raised is attached to this notice as Appendix II. Parties can find a complete discussion of all of the subsidy programs and issues raised in this investigation and the corresponding recommendations in this public memorandum, which is on file in the Department's CRU. A complete version of the *Issues and Decision Memorandum* is available at *http://www.trade.gov/ia* under the heading ''**Federal Register** Notices.'' The paper copy and the electronic version of the *Issues and Decision Memorandum* are identical in content.

Final Determination

In accordance with section 705(c)(1)(B)(i) of the Act, we determine the total net countervailable subsidy rates to be:

Producer/Exporter	Net subsidy rate (percent)
Guizhou Tire Co., Ltd. (GTC)	2.45
Hebei Starbright Tire Co., Ltd. (Starbright)	14.00
Tianjin United Tire & Rubber International Co., Ltd. (TUTRIC)	6.85
All-Others	5.62

In accordance with section 705(c)(5)(A)(ii) of the Act, we have calculated the all others rate based on a weighted average of the three mandatory respondents' calculated rates.

Suspension of Liquidation

In accordance with sections 703(d)(1)(B) and (2) of the Act, we directed U.S. Customs and Border Protection (CBP) to suspend liquidation of all entries of OTR tires from the PRC that were entered, or withdrawn from warehouse, for consumption on or after December 17, 2007. In accordance with section 703(d) of the Act, we instructed CBP to discontinue the suspension of liquidation for countervailing duty purposes for subject merchandise entered, or withdrawn from warehouse, on or after April 15, 2008, but to continue the suspension of liquidation of all entries from December 17, 2007 through April 14, 2008.

If the ITC issues a final affirmative determination of injury, we will issue a countervailing duty order, reinstate suspension of liquidation under section 706(a) of the Act for all entries, and require a cash deposit of estimated countervailing duties for such entries of merchandise at the rates indicated above. If the ITC determines that material injury to, threat of material injury to, or material retardation of, the domestic industry does not exist, this proceeding will be terminated and all estimated duties deposited or securities posted as a result of the suspension of liquidation will be refunded or canceled.

ITC Notification

In accordance with section 705(d) of the Act, we will notify the ITC of our determination. In addition, we are making available to the ITC all non-privileged and non-proprietary information related to this investigation. We will allow the ITC access to all privileged and business proprietary information in our files, provided the ITC confirms it will not disclose such information, either publicly or under an administrative protective order (APO), without the written consent of the Assistant Secretary for Import Administration.

Return or Destruction of Proprietary Information

In the event that the ITC issues a final negative injury determination, this notice will serve as the only reminder to parties subject to APO of their responsibility concerning the destruction of proprietary information disclosed under APO in accordance with section 351.305(a)(3) of the Department's regulations. Failure to comply is a violation of the APO.

This determination is issued and published pursuant to sections 705(d) and 777(i) of the Act.

Dated: July 7, 2008.

David M. Spooner,

Assistant Secretary for Import Administration.

Appendix I: Final Scope of the Investigation

The products covered by the scope are new pneumatic tires designed for off-the-road (OTR) and off-highway use, subject to exceptions identified below. Certain OTR tires are generally designed, manufactured and offered for sale for use on off-road or off-highway surfaces, including but not limited to, agricultural fields, forests, construction sites, factory and warehouse interiors, airport tarmacs, ports and harbors, mines, quarries, gravel yards, and steel mills. The vehicles and equipment for which certain OTR tires are designed for use include, but are not limited to: (1) Agricultural and forestry vehicles and equipment, including agricultural tractors,[3] combine harvesters,[4] agricultural high clearance sprayers,[5] industrial tractors,[6] log-skidders,[7] agricultural implements, highway-towed implements, agricultural logging, and agricultural, industrial, skid-steers/mini-loaders;[8] (2) construction vehicles and equipment, including earthmover articulated dump products, rigid frame haul trucks,[9] front end loaders,[10] dozers,[11] lift trucks,

[3] Agricultural tractors are dual-axle vehicles that typically are designed to pull farming equipment in the field and that may have front tires of a different size than the rear tires.

[4] Combine harvesters are used to harvest crops such as corn or wheat.

[5] Agricultural sprayers are used to irrigate agricultural fields

[6] Industrial tractors are dual-axle vehicles that typically are designed to pull industrial equipment and that may have front tires of a different size than the rear tires.

[7] A log-skidder has a grappling lift arm that is used to grasp, lift and move trees that have been cut down to a truck or trailer for transport to a mill or other destination.

[8] Skid-steer loaders are four-wheel drive vehicles with the left-side drive wheels independent of the right-side drive wheels and lift arms that lie alongside the driver with the major pivot points behind the driver's shoulders. Skid-steer loaders are used in agricultural, construction and industrial settings.

[9] Haul trucks, which may be either rigid frame or articulated (*i.e.*, able to bend in the middle) are typically used in mines, quarries and construction sites to haul soil, aggregate, mined ore, or debris.

[10] Front loaders have lift arms in front of the vehicle. They can scrape material from one location to another, carry material in their buckets, or load material into a truck or trailer.

[11] A dozer is a large four-wheeled vehicle with a dozer blade that is used to push large quantities of soil, sand, rubble, etc., typically around construction sites. They can also be used to perform ''rough grading'' in road construction.

straddle carriers,[12] graders,[13] mobile cranes,[14] compactors; and (3) industrial vehicles and equipment, including smooth floor, industrial, mining, counterbalanced lift trucks, industrial and mining vehicles other than smooth floor, skid-steers/mini-loaders, and smooth floor off-the-road counterbalanced lift trucks.[15] The foregoing list of vehicles and equipment generally have in common that they are used for hauling, towing, lifting, and/or loading a wide variety of equipment and materials in agricultural, construction and industrial settings. Such vehicles and equipment, and the descriptions contained in the footnotes are illustrative of the types of vehicles and equipment that use certain OTR tires, but are not necessarily all-inclusive.

While the physical characteristics of certain OTR tires will vary depending on the specific applications and conditions for which the tires are designed (*e.g.*, tread pattern and depth), all of the tires within the scope have in common that they are designed for off-road and off-highway use. Except as discussed below, OTR tires included in the scope of the proceeding range in size (rim diameter) generally but not exclusively from 8 inches to 54 inches. The tires may be either tube-type[16] or tubeless, radial or non-radial, and intended for sale either to original equipment manufacturers or the replacement market. The subject merchandise is currently classifiable under Harmonized Tariff Schedule of the United States (''HTSUS'') subheadings: 4011.20.10.25, 4011.20.10.35, 4011.20.50.30, 4011.20.50.50, 4011.61.00.00, 4011.62.00.00, 4011.63.00.00, 4011.69.00.00, 4011.92.00.00, 4011.93.40.00, 4011.93.80.00, 4011.94.40.00, and 4011.94.80.00. While HTSUS subheadings are provided for convenience and customs purposes, our written description of the scope is dispositive.

Specifically excluded from the scope are new pneumatic tires designed, manufactured and offered for sale primarily for on-highway or on-road use, including passenger cars, race cars, station wagons, sport utility vehicles, minivans, mobile homes, motorcycles, bicycles, on-road or on-highway trailers, light trucks, and trucks and buses. Such tires generally have in common that the symbol ''DOT'' must appear on the sidewall, certifying that the tire conforms to applicable motor vehicle safety standards. Such excluded tires may also have the following designations that are used by the Tire and Rim Association:

Prefix letter designations:

- P—Identifies a tire intended primarily for service on passenger cars;
- LT—Identifies a tire intended primarily for service on light trucks; and,
- ST—Identifies a special tire for trailers in highway service.

Suffix letter designations:

- TR—Identifies a tire for service on trucks, buses, and other vehicles with rims having specified rim diameter of nominal plus 0.156'' or plus 0.250'';
- MH—Identifies tires for Mobile Homes;
- HC—Identifies a heavy duty tire designated for use on ''HC'' 15'' tapered rims used on trucks, buses, and other vehicles. This suffix is intended to differentiate among tires for light trucks, and other vehicles or other services, which use a similar designation.
- Example: 8R17.5 LT, 8R17.5 HC;
- LT—Identifies light truck tires for service on trucks, buses, trailers, and multipurpose passenger vehicles used in nominal highway service; and
- MC—Identifies tires and rims for motorcycles.

The following types of tires are also excluded from the scope: Pneumatic tires that are not new, including recycled or retreaded tires and used tires; non-pneumatic tires, including solid rubber tires; tires of a kind designed for use on aircraft, all-terrain vehicles, and vehicles for turf, lawn and garden, golf and trailer applications. Also excluded from the scope are radial and bias tires of a kind designed for use in mining and construction vehicles and equipment that have a rim diameter equal to or exceeding 39 inches. Such tires may be distinguished from other tires of similar size by the number of plies that the construction and mining tires contain (minimum of 16) and the weight of such tires (minimum 1500 pounds).

Appendix II: Issues and Decision Memorandum

I. Summary
II. Background
III. Subsidies Valuation
IV. Analysis of Programs
A. *Programs Determined To Be Countervailable*
1. Government Provision of Rubber for Less than Adequate Remuneration.
2. Government Policy Lending
3. Government Debt Forgiveness to TUTRIC
4. Government Debt Forgiveness and the Provision of Land to Starbright Pursuant to Its Change in Ownership
5. Stamp Tax Exemption on Share Transfers under NTSR
6. Tax Subsidies to FIEs in Specially Designated Geographic Areas, and Local Income Tax Exemption and Reduction Programs for ''Productive'' FIEs
7. VAT and Tariff Exemptions for FIEs and Certain Domestic Enterprises Using Imported Equipment in Encouraged Industries
8. State Key Technology Renovation Project Fund
B. *Programs Determined To Be Not Countervailable*
C. *Programs Determined To Not Confer a Benefit During the POI*
D. *Programs Determined To Be Not Used*
E. *Program Determined To Be Terminated*
V. Analysis of Comments
A. *General Issues including Applicability of the CVD Law to the PRC, Cut-Off Date, and Double Remedies*
Comment A.1: Application of the CVD Law to Non-Market Economies, Including the PRC
Comment A.2: Application of the CVD Law to the PRC is Consistent With the APA
Comment A.3: Whether Simultaneous Application of CVD Law in This Investigation and NME Methodology in the Parallel Antidumping Investigation Imposes Double Trade Remedies
Comment A.4: Whether December 11, 2001, is the Appropriate Date From Which the Department May Measure Subsidies in the PRC
B. *Attribution of Subsidies and Cross-Ownership*
Comment B.1: Attribution of Subsidies to, and Cross-Ownership of, TUTRIC/DCB
C. *Whether GTC and TUTRIC Are SOEs*
Comment C.1: Whether GTC Is an SOE
Comment C.2: Whether TUTRIC Is an SOE
D. *Government Provision of Rubber for Less Than Adequate Remuneration*
Comment D.1: Whether the GOC's Provision of Rubber Is Specific
Comment D.2: Whether the GOC's Provision of Rubber Confers a Financial Contribution
Comment D.3: GOC Control of the Rubber Market
Comment D.4: Purchases of SOE-Produced Rubber Through Private Trading Companies
Comment D.5: Whether Imported Rubber Is Countervailable
Comment D.6: Rubber Benchmark
Comment D.7: Adjustments to Rubber Calculation
E. *Government Policy Lending and Government Debt Forgiveness*
Comment E.1: Specificity
Comment E.2: SOCBs and Financial Contribution
Comment E.3: Role of the GOC in the PRC Banking System and Whether To Use an Internal or External Benchmark
Comment E.4: Issues Regarding Building an External Benchmark
Comment E.5: Whether Government Policy Lending to GTC Is Countervailable
Comment E.6: Whether There Was a Financial Contribution to TUTRIC
Comment E.7: Whether TUTRIC's Loans From Certain Other Banks Were Forgiven
F. *Starbright-Specific Issues*
Comment F.1: Due Process
Comment F.2: Application of Total Adverse Facts Available
Comment F.3: Application of the CIO Methodology

[12] A straddle carrier is a rigid frame, engine-powered machine that is used to load and offload containers from container vessels and load them onto (or off of) tractor trailers.

[13] A grader is a vehicle with a large blade used to create a flat surface. Graders are typically used to perform ''finish grading.'' Graders are commonly used in maintenance of unpaved roads and road construction to prepare the base course onto which asphalt or other paving material will be laid.

[14] *i.e.*, ''on-site'' mobile cranes designed for off-highway use.

[15] A counterbalanced lift truck is a rigid framed, engine-powered machine with lift arms that has additional weight incorporated into the back of the machine to offset or counterbalance the weight of loads that it lifts so as to prevent the vehicle from overturning. An example of a counterbalanced lift truck is a counterbalanced fork lift truck. Counterbalanced lift trucks may be designed for use on smooth floor surfaces, such as a factory or warehouse, or other surfaces, such as construction sites, mines, etc.

[16] While tube-type tires are subject to the scope of this proceeding, tubes and flaps are not subject merchandise and therefore are not covered by the scope of this proceeding, regardless of the manner in which they are sold (*e.g.* sold with or separately from subject merchandise).

Comment F.4: The Arm's Length Nature of the Transaction
Comment F.5: The Purchase of Hebei Tire's Assets Was for Fair Market Value
Comment F.6: Whether Starbright Purchased ''Substantially All'' of Hebei Tire's Assets
Comment F.7: Whether the Department Erred in Finding that Hebei Tire's Non-Recurring Subsidies Pass Through to Starbright
Comment F.8: Whether Any Benefit Found by the Department Should Be Limited to the Difference Between the Appraised Value and the Value Paid
Comment F.9: Debt Forgiveness—Unpaid Loans and Other Primary Debt
Comment F.10: Debt Forgiveness—Loan Guarantee Obligations
Comment F.11: The Countervailability of Starbright's Granted Land Use Rights
Comment F.12: The Countervailability of Starbright's Land Leased From Local Villages
Comment F.13: Submission of New Factual Information
G. *Other Countervailable Programs*
Comment G.1: Whether Non-Tradeable Share Reform (NTSR) Is Specific
Comment G.2: Whether GTC Received a Benefit From the Transfer of Bonus Shares to Its Tradeable Shareholders Under NTSR
Comment G.3: Whether GTC Received a Benefit From the GOC's Exemption of Stamp Taxes on Share Transfers Under NTSR
Comment G.4: Whether GTC Received a Benefit From the GOC's Exemption of Income Taxes on Income Derived Under NTSR
Comment G.5: FIE Tax Exemptions
Comment G.6: Value Added Tax and Tariff Exemptions on Imported Equipment
Comment G.7: State Key Technology Renovation Project Fund
H. *Government Provision of Land*
Comment H.1: Whether the GOC's Provision of Land Is a Financial Contribution
Comment H.2: Cut-Off Date for Acquisition of Land-Use Rights
Comment H.3: Whether the GOC's Provision of Land Is a Recurring Benefit
Comment H.4: TUTRIC Land Countervailability
Comment H.5: Whether the GOC's Provision of Land to TUTRIC and GTC Is Specific
Comment H.6: Whether the GOC's Land-Use Rights System Operated on Market Principles During the POI
Comment H.7: Land Benchmark
I. *Not Countervailable Programs*
Comment I.1: VAT Export Rebates
J. *Scope Comments*
Comment J.1: Imported Wheel Mounted Tires Certifications
Comment J.2: OTR Agricultural Tires, Including for Highway-Towed Implements
Comment J.3: Tubes and Flaps
Comment J.4: Earthmoving, Mining, and Construction Tires
VI. Recommendation

[FR Doc. E8–16154 Filed 7–14–08; 8:45 am]
BILLING CODE 3510–DS–P

DEPARTMENT OF COMMERCE

International Trade Administration

[A–570–912]

Certain New Pneumatic Off–The-Road Tires from the People's Republic of China: Final Affirmative Determination of Sales at Less Than Fair Value and Partial Affirmative Determination of Critical Circumstances

AGENCY: Import Administration, International Trade Administration, Department of Commerce.

EFFECTIVE DATE: July 15, 2008.

SUMMARY: On February 20, 2008, the Department of Commerce (the ''Department'') published its preliminary determination of sales at less than fair value (''LTFV'') in the antidumping investigation of certain new pneumatic off–the-road tires (''OTR tires'') from the People's Republic of China (''PRC''). The period of investigation (''POI'') is October 1, 2006, to March 31, 2007. We invited interested parties to comment on our preliminary determination of sales at LTFV and the post–preliminary determinations. Based on our analysis of the comments we received, we have made changes to our calculations for the mandatory respondents. We determine that OTR tires from the PRC are being, or are likely to be, sold in the United States at LTFV as provided in section 735 of the Tariff Act of 1930, as amended (''the Act''). The estimated margins of sales at LTFV are shown in the ''Final Determination Margins'' section of this notice.

FOR FURTHER INFORMATION CONTACT: Lilit Astvatsatrian or Charles Riggle, AD/CVD Operations, Office 8, Import Administration, International Trade Administration, U.S. Department of Commerce, 14th Street and Constitution Avenue, NW, Washington, DC 20230; telephone: (202) 482–6412 or (202) 482–0650, respectively.

SUPPLEMENTARY INFORMATION:

Case History

The Department published its preliminary determination of sales at LTFV on February 20, 2008. *See Certain New Pneumatic Off–The-Road Tires from the People's Republic of China: Preliminary Determination of Sales at Less Than Fair Value and Postponement of Final Determination*, 73 FR 9278 (February 20, 2008) (''*Preliminary Determination*''). The Department issued a ministerial error allegation memorandum, in which it agreed to correct several ministerial errors for the final determination. *See* Memorandum entitled ''Preliminary Determination of Antidumping Duty Investigation on Certain New Pneumatic Off–The-Road Tires from the People's Republic of China: Allegations of Ministerial Errors,'' dated March 28, 2008 (''Ministerial Error Memo''). On April 21, 2008, the Department published an affirmative preliminary determination of critical circumstances. *See Certain New Pneumatic Off–The-Road Tires from the People's Republic of China: Affirmative Preliminary Determination of Critical Circumstances*, 73 FR 21312, (April 21, 2008), (''*Affirmative Preliminary Determination of Critical Circumstances*'').

Between March 25 and April 25, 2008, the Department conducted verifications of Starbright,[1] Tianjin United Tire & Rubber International Co., Ltd. (''TUTRIC''),[2] Xugong,[3] and Guizhou Tyre Co., Ltd. (''Guizhou Tyre'').[4] *See* the ''Verification'' section below for additional information.

On May 14, 2008, the Department issued a memorandum regarding the scope of both the AD and CVD Investigations on OTR Tires from the PRC, addressing the scope comments submitted by multiple interested parties. *See Preliminary Determination: Comments on the Scope of the Investigations (''Preliminary Scope Determination'')*.

The Department issued a post–preliminary determination on May 19, 2008, in which it applied a new targeted dumping methodology. See Memorandum entitled ''Post–Preliminary Determinations on Targeted

[1] *See* Verification of the Factors Response of Hebei Starbright Co., Ltd. in the Antidumping Duty Investigation of Certain New Pneumatic Off-The-Road Tires from the People's Republic of China, dated May 5, 2008 (''Starbright Verification Report''); and Verification of Constructed Export Sales (''CEP'') for Hebei Starbright Tire Co., Ltd. (''Starbright'') at GPX International Tire Corporation (''GPX7rdquo;), dated May 15, 2008 (''Starbright CEP Verification Report'').

[2] *See* Verification of the Sales and Factors Response of TUTRIC in the Antidumping Investigation of Certain New Pneumatic Off-The-Road Tires from the People's Republic of China, dated May 2, 2008 (''TUTRIC Verification Report'').

[3] *See* Verification of the Sales and Factors Response of Xuzhou Xugong Tyres Co., Ltd. in the Antidumping Duty Investigation of Certain New Pneumatic Off-The-Road Tires from the People's Republic of China dated May 12, 2008 (''Xugong Verification Report'').

[4] *See* Verification of the Sales and Factors Response of Guizhou Tyre in the Antidumping Investigation of Certain New Pneumatic Off-The-Road Tires from the People's Republic of China dated May 9, 2008 (''Guizhou Tyre Verification Report'').

Dumping,'' dated May 19, 2008 (''Targeted Dumping Determination'').

On May 19, 2008, the Department also preliminarily granted separate–rate status to two separate rate applicants, Qingdao Aonuo Tyre Co., Ltd. (''Aonuo'') and Kenda Rubber (China) Co., Ltd. (''Kenda China''). *See* Memorandum entitled ''Preliminary Determination of Separate–Rate Status of Qingdao Aonuo Tyre Co., Ltd. and Kenda Rubber (China) Co., Ltd. in the Antidumping Investigation of Certain New Pneumatic Off–the-Road Tires from the People's Republic of China,'' dated May 19, 2008.

We invited interested parties to comment on the *Preliminary Determination, Affirmative Preliminary Determination of Critical Circumstances*, and the post–preliminary scope, targeted dumping, and separate rate determinations. On May 22, 2008, multiple interested parties filed case briefs with respect to the scope of the AD and concurrent countervailing duty (CVD) proceeding. On May 27, 2008, many of these same parties filed rebuttal comments regarding the scope of these two proceedings. In addition, on May 27, 2008, multiple interested parties filed case briefs with respect to issues specific to the AD proceeding. These same parties filed rebuttal briefs on June 2, 2008. The Department held two hearings on June 12, 2008, one solely related to the scope of the AD and CVD proceedings and the second to address issues related solely to the AD investigation.

Verification

As provided in section 782(i) of the Act, we verified the information submitted by Starbright, Guizhou Tyre, TUTRIC, and Xugong for use in our final determination. *See* the Department's verification reports on the record of this investigation in the Central Records Unit (''CRU''), Room 1117 of the main Department building, with respect to these entities. For all verified companies, we used standard verification procedures, including examination of relevant accounting and production records, as well as original source documents provided by respondents.

Analysis of Comments Received

All issues raised in the case and rebuttal briefs by parties to this investigation are addressed in the ''Investigation of Certain New Pneumatic Off–The-Road Tires from the People's Republic of China: Issues and Decision Memorandum,'' dated concurrently with this notice and, which is hereby adopted by this notice (''Issues and Decision Memorandum''). A list of the issues which parties raised and to which we respond in the Issues and Decision Memorandum is attached to this notice as Appendix II. The Issues and Decision Memorandum is a public document and is on file in the CRU, and is accessible on the Web at ia.ita.doc.gov/frn. The paper copy and electronic version of the memorandum are identical in content.

Changes Since the Preliminary Determination

Based on our analysis of information on the record of this investigation, we have made changes to the margin calculations for the final determination for all mandatory respondents.

General Issues

- We have updated the wholesale price index adjustor for the POI, which modified the inflated values for steam, water, electricity, brokerage and handling, marine insurance, and truck freight rate. *See* ''Certain New Pneumatic Off–The-Road Tires from the People's Republic of China: Surrogate Value Memorandum,'' dated July 7, 2008 (''Final SV Memo'').
- We have corrected linking errors in the inflator adjustments for marine insurance and Essar Steel's brokerage and handling. *See* Final SV Memo.
- We corrected an averaging error in the calculation of the surrogate value for water. *See* Final SV Memo.
- We corrected the rail rate used in the company–specific rail freight to be based on metric ton. *See* Analysis Memorandum for the Final Determination: Xuzhou Xugong Tyres Co., Ltd. (''Xugong''), dated July 7, 2008 (''Xugong Final Analysis Memo'') and Analysis Memorandum for the Final Determination: Guizhou Tyre and its affiliates, dated July 7, 2008 (''Guizhou Tyre Final Analysis Memo'').
- We have updated the PRC labor wage rate. *See* Final SV Memo.
- We have used the following four financial statements to calculate the surrogate financial ratios: CEAT Limited (''Ceat''); Falcon Tyres Ltd. (''Falcon''); Goodyear India Limited (''Goodyear''); and TVS Srichakra (''TVS''). See Comments 17.A and 17.B in the Issues and Decision Memo dated concurrently with this notice.
- We have valued steam using the natural gas price reported in a May 2005 publication of *Financial Express*. We have inflated the resulting steam value by applying the appropriate WPI inflator.
- We have made the following changes to the surrogate financial ratio calculations:
  - *CEAT:* 1) We treated a) Sale of Scrap and b) Miscellaneous income as SG&A; and 2) we excluded Rebates and Discounts from the surrogate ratio calculations. *See* Final SV Memo, and Issues and Decision Memorandum at Comments 18.B and 18.C.
  - *Falcon:* 1) We treated a) Sale of Scrap and b) Miscellaneous income as SG&A; and 2) we excluded Discount from the surrogate ratio calculations. *See* Final SV Memo and Issues and Decision Memorandum at Comments 18.B and 18.C.
  - *Goodyear:* 1) We treated a) Scrap Sale, b) One time settlement from vendor(s), and c) Unidentified Miscellaneous Income as SG&A; 2) we excluded Target Plus Export Incentives from the surrogate ratio calculations; 3) we treated Retirement Gratuities as direct labor; and 4) we included Purchase of Finished Goods in the denominator of Goodyear's SG&A and profit ratio calculations. *See* Final SV Memo, and Ministerial Error Memorandum, and Issues and Decision Memorandum at Comments 18.B and 18.G.
  - *TVS:* 1) We treated a) Miscellaneous Sales and b) Miscellaneous Income as part of SG&A; and 2) we treated Gratuity as direct labor. *See* Final SV Memo and Issues and Decision Memorandum at Comment 18.B and 18.G.
- We have revised the calculation of U.S. price for Guizhou Tyre and Starbright to include a deduction for warehousing expenses based on the average days subject merchandise is in inventory. See Final SV Memo, Guizhou Tyre Final Analysis Memo, and Starbright Final Analysis Memo.

Company–Specific Changes Since the Preliminary Determination

Xugong: *See* Xugong Final Analysis Memo.

Guizhou Tyre: *See* Guizhou Tyre Final Analysis Memo.

Starbright: *See* Analysis Memorandum for the Final Determination: Hebei Starbright Co., Ltd., dated July 7, 2008.

TUTRIC: *See* Analysis Memorandum for the Final Determination: Tianjin United Tire & Rubber International

Co., Ltd., dated July 7, 2008.

Scope of Investigation

The products covered by the scope of this investigation are new pneumatic tires designed for off–the-road (OTR) and off–highway use, subject to certain exceptions. In the *Preliminary Determination*, we stated that we had received comments on the scope of the investigation from a number of parties and that all comments raised by the parties would be addressed in a post–preliminary scope determination. On May 14, 2008, the Department issued a memorandum regarding the scope of both the AD and CVD Investigations on OTR Tires from the PRC, addressing the scope comments submitted by multiple interested parties. *See Preliminary Scope Determination*.

In the *Preliminary Scope Determination*, we made certain modifications to the scope of the investigation and invited interested parties to comment on these modifications. Interested parties submitted comments on the *Preliminary Scope Determination* on May 22, 2008 and rebuttal comments on May 27, 2008. Based on these comments, we have made certain clarifications to the scope of the investigation. These clarifications, as well as a complete description of all products covered by the scope of this investigation, and a list of excluded products, are reflected in the *Final Scope of the Investigation* which is appended to this notice at Appendix I. All comments submitted on the *Preliminary Scope Determination* are addressed in the *Scope Comments* section of the Issues and Decision.

Targeted Dumping

We have analyzed the case and rebuttal briefs with respect to targeted dumping issues submitted for the record in this investigation. As a result of our analysis, we made certain changes in the targeted dumping test we applied for purposes of the final determination. These changes result in a finding of targeted dumping for Xugong, but not for Guizhou Tyre, Starbright, and TUTRIC. For further discussion, *see* Comments 23.A through 23.H in the Issues and Decision Memorandum. As indicated below, for Guizhou Tyre, Starbright, and TUTRIC, we continue to find overall dumping margins above *de minimis*. *See* Guizhou Tyre Final Analysis Memo, Starbright Final Analysis Memo, and TUTRIC Final Analysis Memo, respectively. Further, as indicated below, we find that Xugong's overall margin is zero. *See* Xugong Final Analysis Memo.

Surrogate Country

In the *Preliminary Determination*, we stated that we had selected India as the appropriate surrogate country to use in this investigation for the following reasons: (1) it is a significant producer of comparable merchandise; (2) it is at a similar level of economic development comparable to that of the PRC; and (3) we have reliable data from India that we can use to value the factors of production. *See Preliminary Determination*. For the final determination, we received no comments and made no changes to our findings with respect to the selection of a surrogate country.

Separate Rates

In proceedings involving non–market-economy (''NME'') countries, the Department begins with a rebuttable presumption that all companies within the country are subject to government control and, thus, should be assigned a single antidumping duty deposit rate. It is the Department's policy to assign all exporters of merchandise subject to an investigation in an NME country this single rate unless an exporter can demonstrate that it is sufficiently independent so as to be entitled to a separate rate. *See Final Determination of Sales at Less Than Fair Value: Sparklers from the People's Republic of China*, 56 FR 20588 (May 6, 1991) (''*Sparklers*''), as amplified by *Notice of Final Determination of Sales at Less Than Fair Value: Silicon Carbide from the People's Republic of China*, 59 FR 22585 (May 2, 1994) (''*Silicon Carbide*''), and 19 CFR 351.107(d).

In the *Preliminary Determination*, we found that Starbright, Guizhou Tyre, TUTRIC, Xugong and 23 separate rate–applicants demonstrated their eligibility for separate–rate status (collectively, ''Separate–Rate Recipients''). On May 19, 2008, as discussed above, we granted separate–rate status to two additional applicants, Aonuo and Kenda China; thus, they are now part of the pool of Separate–Rate Recipients. For the final determination, we continue to find that the evidence placed on the record of this investigation by Starbright, Guizhou Tyre, TUTRIC, Xugong and the remaining Separate Rate Recipients demonstrate both a *de jure* and *de facto* absence of government control, with respect to their respective exports of the merchandise under investigation, and, thus are eligible for separate rate status.

Additionally, based on comments received from certain Separate Rate Recipients, and a review of the record, we found that the combination rates or the spelling of names for certain exporters were not properly included in the *Preliminary Determination*. Because these errors pertain to the identification of the proper separate rates recipients for this investigation, the Department is making these corrections effective as of February 20, 2008, the date of the *Preliminary Determination*. The companies whose names have been corrected are identified with an ''='' in the ''*Final Determination Margins*'' section, below. Any liquidation instructions for the provisional measures period will reflect these corrections.

Use of Facts Available

Section 776(a)(2) of the Act, provides that, if an interested party: (A) withholds information that has been requested by the Department; (B) fails to provide such information in a timely manner or in the form or manner requested subject to sections 782(c)(1) and (e) of the Act; (C) significantly impedes a proceeding under the antidumping statute; or (D) provides such information but the information cannot be verified, the Department shall, subject to subsection 782(d) of the Act, use facts otherwise available in reaching the applicable determination.

Section 782(c)(1) of the Act provides that if an interested party ''promptly after receiving a request from {the Department} for information, notifies {the Department} that such party is unable to submit the information requested in the requested form and manner, together with a full explanation and suggested alternative forms in which such party is able to submit the information,'' the Department may modify the requirements to avoid imposing an unreasonable burden on that party.

Section 782(d) of the Act provides that, if the Department determines that a response to a request for information does not comply with the request, the Department will inform the person submitting the response of the nature of the deficiency and shall, to the extent practicable, provide that person the opportunity to remedy or explain the deficiency. If that person submits further information that continues to be unsatisfactory, or this information is not submitted within the applicable time limits, the Department may, subject to section 782(e), disregard all or part of the original and subsequent responses, as appropriate.

Section 782(e) of the Act states that the Department shall not decline to consider information deemed ''deficient'' under section 782(d) if: (1) the information is submitted by the

established deadline; (2) the information can be verified; (3) the information is not so incomplete that it cannot serve as a reliable basis for reaching the applicable determination; (4) the interested party has demonstrated that it acted to the best of its ability; and (5) the information can be used without undue difficulties.

Furthermore, section 776(b) of the Act states that if the Department ''finds that an interested party has failed to cooperate by not acting to the best of its ability to comply with a request for information from the administering authority or the Commission, the administering authority or the Commission ..., in reaching the applicable determination under this title, may use an inference that is adverse to the interests of that party in selecting from among the facts otherwise available.'' *See also Statement of Administrative Action (SAA) accompanying the Uruguay Round Agreements Act (URAA)*, H.R. Rep. No. 103–316, Vol. 1 at 870 (1994).

For this final determination, in accordance with sections 773(c)(3)(A) and (B) of the Act and section s776(a)(2)(A), (B) and (D) and 776(b) of the Act, we have determined that the use of adverse facts available (''AFA'') is warranted for the PRC entity, as discussed below.

The PRC–Wide Rate

Because we begin with the presumption that all companies within an NME country are subject to government control and because only the companies listed under the ''Final Determination Margins'' section below have overcome that presumption, we are applying a single antidumping rate - the PRC–wide rate - to all other exporters of subject merchandise from the PRC. *See, e.g., Synthetic Indigo from the People's Republic of China: Notice of Final Determination of Sales at Less Than Fair Value*, 65 FR 25706 (May 3, 2000). The PRC–wide rate applies to all entries of subject merchandise except for entries from the respondents identified as receiving a separate rate in the ''Final Determination Margins'' section below. In the *Preliminary Determination*, the Department found that the PRC–wide entity did not respond to our requests for information because record evidence indicates there were more exporters of OTR tires from the PRC during the POI than those that responded to the Q&V questionnaire or the full antidumping questionnaire. Therefore, in the *Preliminary Determination* we treated these PRC producers/exporters as part of the PRC–wide entity because they did not demonstrate that they operate free of government control over their export activities. No additional information was placed on the record with respect to these entities after the *Preliminary Determination*. In addition, because the PRC–wide entity has not provided the Department with the requested information; pursuant to section 776(a)(2)(A) and (C) of the Act, the Department continues to find that the use of facts available is appropriate to determine the PRC–wide rate. Section 776(b) of the Act provides that, in selecting from among the facts otherwise available, the Department may employ an adverse inference if an interested party fails to cooperate by not acting to the best of its ability to comply with requests for information. *See Notice of Final Determination of Sales at Less Than Fair Value: Certain Cold–Rolled Flat–Rolled Carbon–Quality Steel Products from the Russian Federation*, 65 FR 5510, 5518 (February 4, 2000). *See also, SAA* at 870. We have determined that, because the PRC–wide entity did not respond to our request for information, it has failed to cooperate to the best of its ability. Therefore, the Department finds that, in selecting from among the facts otherwise available, an adverse inference is warranted.

Corroboration

Section 776(c) of the Act provides that, when the Department relies on secondary information in using the facts otherwise available, it must, to the extent practicable, corroborate that information from independent sources that are reasonably at its disposal. We have interpreted ''corroborate'' to mean that we will, to the extent practicable, examine the reliability and relevance of the information submitted. *See Notice of Final Determination of Sales at Less Than Fair Value: Certain Cold–Rolled Flat–Rolled Carbon–Quality Steel Products From Brazil*, 65 FR 5554, 5568 (February 4, 2000); see, *e.g., Tapered Roller Bearings and Parts Thereof, Finished and Unfinished, From Japan, and Tapered Roller Bearings, Four Inches or Less in Outside Diameter, and Components Thereof, From Japan; Preliminary Results of Antidumping Duty Administrative Reviews and Partial Termination of Administrative Reviews*, 61 FR 57391, 57392 (November 6, 1996).

At the *Preliminary Determination*, in accordance with section 776(c) of the Act, we corroborated our adverse facts available (''AFA'') margin by comparing the U.S. prices and normal values from the petition to the U.S. price and normal values for the respondents. *See* Memorandum ''Corroboration of the PRC–Wide Facts Available Rate for the Preliminary Determination,'' dated February 5, 2008. Similarly, for the final determination, we have also compared the U.S. prices and normal values from the petition to the U.S. prices and normal values for the respondents. We found that the U.S. prices and normal values used to calculate the petition margin were within the range of net U.S. prices and normal values, respectively, used in our margin calculations for the mandatory respondents in this investigation.

Because no parties commented on the selection of the PRC–wide rate, we continue to find that the margin of 210.48 percent has probative value. Accordingly, we find that the rate of 210.48 percent is corroborated within the meaning of section 776(c) of the Act.

Critical Circumstances

In the *Preliminary Determination*, we found that critical circumstances exist for the PRC entity, however, we did not find that critical circumstances exist with respect to the mandatory respondents or the Separate Rate Recipients. We continue to find that critical circumstances exist for the PRC entity, and we continue to find that critical circumstances do not exist for the mandatory respondents or the remaining Separate Rate Recipients. *See* Issues and Decision Memorandum at Comment 24.

Final Determination Margins

We determine that the following percentage weighted–average margins exist for the POI:

OTR TIRES FROM THE PRC

Exporter	Producer	Weighted–Average Margin (Percent)
Guizhou Tyre Co., Ltd.*	Guizhou Advance Rubber	4.08
Guizhou Tyre Co., Ltd.*	Guizhou Tyre Co., Ltd.	4.08
Hebei Starbright Co., Ltd./GPX International Tire Corporation, Ltd. ∧	Hebei Starbright Co., Ltd.	19.15
Tianjin United Tire & Rubber International Co., Ltd. (“TUTRIC”)*	Tianjin United Tire & Rubber International Co., Ltd. (“TUTRIC”).	8.09
Xuzhou Xugong Tyres Co., Ltd. * =	Xuzhou Xugong Tyres Co., Ltd. =	0.00
Aeolus Tyre Co., Ltd. *	Aeolus Tyre Co., Ltd.	9.48
Double Coin Holdings Ltd. *	Double Coin Holdings Ltd.	9.48
Double Coin Holdings Ltd. *	Double Coin Group Rugao Tyre Co., Ltd.	9.48
Double Coin Holdings Ltd. *	Double Coin Group Shanghai Donghai Tyre Co., Ltd..	9.48
Double Happiness Tyre Industries Corp., Ltd. *	Double Happiness Tyre Industries Corp., Ltd.	9.48
Jiangsu Feichi Co., Ltd. *	Jiangsu Feichi Co., Ltd.	9.48
Kenda Rubber (China) Co., Ltd./Kenda Global Holding Co., Ltd (Cayman Islands).	Kenda Rubber (China) Co., Ltd.	9.48
KS Holding Limited ∧	Oriental Tyre Technology Ltd.	9.48
KS Holding Limited ∧	Shandong Taishan Tyre Co., Ltd.	9.48
KS Holding Limited ∧	Xu Zhou Xugong Tyres Co., Ltd.	9.48
Laizhou Xiongying Rubber Industry Co., Ltd. *	Laizhou Xiongying Rubber Industry Co., Ltd.	9.48
Oriental Tyre Technology Limited +	Midland Off the Road Tire Co., Ltd.	9.48
Oriental Tyre Technology Limited +	Midland Specialty Tire Co., Ltd.	9.48
Oriental Tyre Technology Limited +	Xuzhou Hanbang Tyres Co., Ltd.	9.48
Qingdao Aonuo Tyre Co., Ltd.	Qingdao Aonuo Tyre Co., Ltd.	9.48
Qingdao Etyre International Trade Co., Ltd. *	Shandong Xingda Tyre Co. Ltd.	9.48
Qingdao Etyre International Trade Co., Ltd. *	Shandong Xingyuan International Trade Co. Ltd.	9.48
Qingdao Etyre International Trade Co., Ltd. *	Shandong Xingyuan Rubber Co. Ltd.	9.48
Qingdao Free Trade Zone Full–World International Trading Co., Ltd. *	Qingdao Eastern Industrial Group Co., Ltd.	9.48
Qingdao Free Trade Zone Full–World International Trading Co., Ltd. *	Qingdao Qihang Tyre Co., Ltd.	9.48
Qingdao Free Trade Zone Full–World International Trading Co., Ltd. *	Qingdao Shuanghe Tyre Co., Ltd.	9.48
Qingdao Free Trade Zone Full–World International Trading Co., Ltd. *	Qingdao Yellowsea Tyre Factory	9.48
Qingdao Free Trade Zone Full–World International Trading Co., Ltd. *	Shandong Zhentai Tyre Co., Ltd.	9.48
Qingdao Hengda Tyres Co., Ltd. *	Qingdao Hengda Tyres Co., Ltd.	9.48
Qingdao Milestone Tyre Co., Ltd.*	Qingdao Shuanghe Tyre Co., Ltd.	9.48
Qingdao Milestone Tyre Co., Ltd.*	Shandong Zhentai Tyre Co., Ltd.	9.48
Qingdao Milestone Tyre Co., Ltd.*	Shifeng Double–Star Tire Co., Ltd.	9.48
Qingdao Milestone Tyre Co., Ltd.*	Weifang Longtai Tyre Co., Ltd.	9.48
Qingdao Qihang Tyre Co., Ltd. *	Qingdao Qihang Tyre Co., Ltd.	9.48
Qingdao Qizhou Rubber Co., Ltd. *	Qingdao Qizhou Rubber Co., Ltd.	9.48
Qingdao Sinorient International Ltd. *	Qingdao Hengda Tyres Co., Ltd.	9.48
Qingdao Sinorient International Ltd. *	Shifeng Double–Star Tire Co., Ltd.	9.48
Qingdao Sinorient International Ltd. *	Tengzhou Broncho Tyre Co., Ltd.=	9.48
Shandong Huitong Tyre Co., Ltd. *	Shandong Huitong Tyre Co., Ltd.	9.48
Shandong Jinyu Tyre Co., Ltd. *	Shandong Jinyu Tyre Co., Ltd.	9.48
Shandong Taishan Tyre Co., Ltd. *=	Shandong Taishan Tyre Co., Ltd. =	9.48
Shandong Wanda Boto Tyre Co., Ltd.*	Shandong Wanda Boto Tyre Co., Ltd.	9.48
Shandong Xingyuan International Trading Co., Ltd. *	Shangdong Xingda Tyre Co., Ltd.	9.48
Shandong Xingyuan International Trading Co., Ltd. *	Xingyuan Tyre Group Co., Ltd.	9.48
Techking Tires Limited *=	Shandong Xingda Tyre Co. Ltd.	9.48
Techking Tires Limited *=	Shandong Xingyuan International Trade Co. Ltd.	9.48
Techking Tires Limited *=	Shandong Xingyuan Rubber Co. Ltd.	9.48
Triangle Tyre Co., Ltd. *	Triangle Tyre Co., Ltd.	9.48
Wendeng Sanfeng Tyre Co., Ltd.*	Wendeng Sanfeng Tyre Co., Ltd.	9.48
Zhaoyuan Leo Rubber Co., Ltd. *	Zhaoyuan Leo Rubber Co., Ltd.	9.48
PRC–Entity		210.48

Disclosure

We will disclose the calculations performed within five days of the date of publication of this notice to parties in this proceeding in accordance with 19 CFR 351.224(b).

Continuation of Suspension of Liquidation

In accordance with section 735(c)(1)(B) of the Act, we are directing U.S. Customs and Border Protection (CBP) to continue to suspend liquidation of all imports of subject merchandise entered or withdrawn from warehouse, for consumption on or after the following dates: (1) for Starbright, TUTRIC, Guizhou Tyre and the separate rate companies, on or after February 20, 2008, the date of publication of the *Preliminary Determination* in the **Federal Register**, (2) for the PRC–wide entity, on or after November 22, 2007, which is 90 days prior to the publication of the *Preliminary Determination* (consistent with our finding that critical circumstances exist for the PRC–wide entity). We will instruct CBP to continue to require a cash deposit or the posting of a bond for all companies based on the estimated weighted–average dumping margins shown above. The suspension of

liquidation instructions will remain in effect until further notice.

Because the Department found that the weighted–average dumping margin for subject merchandise produced and exported by Xugong is zero, we are instructing CBP to terminate suspension of liquidation of all imports of subject merchandise produced and exported by Xugong, entered, or withdrawn from warehouse, for consumption on or after February 20, 2008, the date of publication of the *Preliminary Determination*. CBP shall refund any cash deposit and release any bond or other security previously posted in connection with merchandise produced and exported by Xugong. These suspension of liquidation instructions will remain in effect until further notice.

ITC Notification

In accordance with section 735(d) of the Act, we have notified the International Trade Commission (''ITC'') of our final determination of sales at LTFV. As our final determination is affirmative, in accordance with section 735(b)(2) of the Act, within 45 days the ITC will determine whether the domestic industry in the United States is materially injured, or threatened with material injury, by reason of imports or sales (or the likelihood of sales) for importation of the subject merchandise. If the ITC determines that material injury or threat of material injury does not exist, the proceeding will be terminated and all securities posted will be refunded or canceled. If the ITC determines that such injury does exist, the Department will issue an antidumping duty order directing CBP to assess antidumping duties on all imports of the subject merchandise entered, or withdrawn from warehouse, for consumption on or after the effective date of the suspension of liquidation.

Notification Regarding APO

This notice also serves as a reminder to the parties subject to administrative protective order (''APO'') of their responsibility concerning the disposition of proprietary information disclosed under APO in accordance with 19 CFR 351.305. Timely notification of return or destruction of APO materials or conversion to judicial protective order is hereby requested. Failure to comply with the regulations and the terms of an APO is a sanctionable violation.

This determination and notice are issued and published in accordance with sections 735(d) and 777(i)(1) of the Act.

Dated: July 7, 2008.

David M. Spooner,

Assistant Secretary for Import Administration.

Appendix I

Scope of the Proceeding Antidumping and Countervailing Duty Investigations On Off–The-Road Tires from the PRC

The products covered by the scope are new pneumatic tires designed for off–the-road (OTR) and off–highway use, subject to exceptions identified below. Certain OTR tires are generally designed, manufactured and offered for sale for use on off–road or off–highway surfaces, including but not limited to, agricultural fields, forests, construction sites, factory and warehouse interiors, airport tarmacs, ports and harbors, mines, quarries, gravel yards, and steel mills. The vehicles and equipment for which certain OTR tires are designed for use include, but are not limited to: (1) agricultural and forestry vehicles and equipment, including agricultural tractors,[5] combine harvesters,[6] agricultural high clearance sprayers,[7] industrial tractors,[8] log–skidders,[9] agricultural implements, highway–towed implements, agricultural logging, and agricultural, industrial, skid–steers/mini–loaders;[10] (2) construction vehicles and equipment, including earthmover articulated dump products, rigid frame haul trucks,[11] front end loaders,[12] dozers,[13] lift trucks, straddle carriers,[14] graders,[15] mobile cranes,[16] compactors; and (3) industrial vehicles and equipment, including smooth floor, industrial, mining, counterbalanced lift trucks, industrial and mining vehicles other than smooth floor, skid–steers/mini–loaders, and smooth floor off–the-road counterbalanced lift trucks.[17] The foregoing list of vehicles and equipment generally have in common that they are used for hauling, towing, lifting, and/or loading a wide variety of equipment and materials in agricultural, construction and industrial settings. Such vehicles and equipment, and the descriptions contained in the footnotes are illustrative of the types of vehicles and equipment that use certain OTR tires, but are not necessarily all–inclusive. While the physical characteristics of certain OTR tires will vary depending on the specific applications and conditions for which the tires are designed (*e.g.*, tread pattern and depth), all of the tires within the scope have in common that they are designed for off–road and off–highway use. Except as discussed below, OTR tires included in the scope of the proceeding range in size (rim diameter) generally but not exclusively from 8 inches to 54 inches. The tires may be either tube–type[18] or tubeless, radial or non–radial, and intended for sale either to original equipment manufacturers or the replacement market. The subject merchandise is currently classifiable under Harmonized Tariff Schedule of the United States (''HTSUS'') subheadings: 4011.20.10.25, 4011.20.10.35, 4011.20.50.30, 4011.20.50.50, 4011.61.00.00, 4011.62.00.00, 4011.63.00.00, 4011.69.00.00, 4011.92.00.00,

[5] Agricultural tractors are dual-axle vehicles that typically are designed to pull farming equipment in the field and that may have front tires of a different size than the rear tires.

[6] Combine harvesters are used to harvest crops such as corn or wheat.

[7] Agricultural sprayers are used to irrigate agricultural fields

[8] Industrial tractors are dual-axle vehicles that typically are designed to pull industrial equipment and that may have front tires of a different size than the rear tires.

[9] A log-skidder has a grappling lift arm that is used to grasp, lift and move trees that have been cut down to a truck or trailer for transport to a mill or other destination.

[10] Skid-steer loaders are four-wheel drive vehicles with the left-side drive wheels independent of the right-side drive wheels and lift arms that lie alongside the driver with the major pivot points behind the driver's shoulders. Skid-steer loaders are used in agricultural, construction and industrial settings.

[11] Haul trucks, which may be either rigid frame or articulated (*i.e.*, able to bend in the middle) are typically used in mines, quarries and construction sites to haul soil, aggregate, mined ore, or debris.

[12] Front loaders have lift arms in front of the vehicle. They can scrape material from one location to another, carry material in their buckets, or load material into a truck or trailer.

[13] A dozer is a large four-wheeled vehicle with a dozer blade that is used to push large quantities of soil, sand, rubble, *etc.*, typically around construction sites. They can also be used to perform ''rough grading'' in road construction.

[14] A straddle carrier is a rigid frame, engine-powered machine that is used to load and offload containers from container vessels and load them onto (or off of) tractor trailers.

[15] A grader is a vehicle with a large blade used to create a flat surface. Graders are typically used to perform ''finish grading.'' Graders are commonly used in maintenance of unpaved roads and road construction to prepare the base course onto which asphalt or other paving material will be laid.

[16] *i.e.*, ''on-site'' mobile cranes designed for off-highway use.

[17] A counterbalanced lift truck is a rigid framed, engine-powered machine with lift arms that has additional weight incorporated into the back of the machine to offset or counterbalance the weight of loads that it lifts so as to prevent the vehicle from overturning. An example of a counterbalanced lift truck is a counterbalanced fork lift truck. Counterbalanced lift trucks may be designed for use on smooth floor surfaces, such as a factory or warehouse, or other surfaces, such as construction sites, mines, *etc.*

[18] While tube-type tires are subject to the scope of this proceeding, tubes and flaps are not subject merchandise and therefore are not covered by the scope of this proceeding, regardless of the manner in which they are sold (*e.g.* sold with or separately from subject merchandise).

4011.93.40.00, 4011.93.80.00, 4011.94.40.00, and 4011.94.80.00. While HTSUS subheadings are provided for convenience and customs purposes, our written description of the scope is dispositive.

Specifically excluded from the scope are new pneumatic tires designed, manufactured and offered for sale primarily for on–highway or on–road use, including passenger cars, race cars, station wagons, sport utility vehicles, minivans, mobile homes, motorcycles, bicycles, on–road or on–highway trailers, light trucks, and trucks and buses. Such tires generally have in common that the symbol ''DOT'' must appear on the sidewall, certifying that the tire conforms to applicable motor vehicle safety standards. Such excluded tires may also have the following designations that are used by the Tire and Rim Association:

Prefix letter designations:

- P – Identifies a tire intended primarily for service on passenger cars;
- LT – Identifies a tire intended primarily for service on light trucks; and,
- ST – Identifies a special tire for trailers in highway service.

Suffix letter designations:

- TR – Identifies a tire for service on trucks, buses, and other vehicles with rims having specified rim diameter of nominal plus 0.156″ or plus 0.250″;
- MH – Identifies tires for Mobile Homes;
- HC – Identifies a heavy duty tire designated for use on ''HC'' 15'' tapered rims used on trucks, buses, and other vehicles. This suffix is intended to differentiate among tires for light trucks, and other vehicles or other services, which use a similar designation.
- Example: 8R17.5 LT, 8R17.5 HC;
- LT – Identifies light truck tires for service on trucks, buses, trailers, and multipurpose passenger vehicles used in nominal highway service; and
- MC – Identifies tires and rims for motorcycles.

The following types of tires are also excluded from the scope: pneumatic tires that are not new, including recycled or retreaded tires and used tires; non–pneumatic tires, including solid rubber tires; tires of a kind designed for use on aircraft, all–terrain vehicles, and vehicles for turf, lawn and garden, golf and trailer applications. Also excluded from the scope are radial and bias tires of a kind designed for use in mining and construction vehicles and equipment that have a rim diameter equal to or exceeding 39 inches. Such tires may be distinguished from other tires of similar size by the number of plies that the construction and mining tires contain (minimum of 16) and the weight of such tires (minimum 1500 pounds).

Appendix II

I. General Issues

Comment 1: Whether the Department Should Apply Market–Economy Calculation Methodologies in this Investigation
Comment 2: Whether the Dual Application of the Non–Market Economy AD Methodology and the Market–Economy CVD Methodology Results in Double Remedies
Comment 3: Treatment of Corrections from Verifications
Comment 4: Ministerial Error Corrections
Comment 5: Wage Rate Methodology
Comment 6: Adjustment for Un–refunded Value Added Taxes
Comment 7: Treatment of Respondents' Packing Labor

General Surrogate Value Issues

Comment 8: Standard for Accepting Respondents' Proposed HTS Categories
Comment 9: Treatment of Aberrational Data in Certain Surrogate Values
Comment 10: Reliability of *Infodrive India* Data
Comment 11: Surrogate Value Source for Steam
Comment 12: Natural Rubber Surrogate Value
Comment 13: Steam Coal Surrogate Value
Comment 14: Carbon Black Surrogate Value
Comment 15: Surrogate Value Source for Electricity
Comment 16: Use of Electricity–Specific Inflation Index

Surrogate Financial Statements

Comment 17: Selection of Surrogate Financial Statements
Comment 17.A: Use of Financial Statements of Surrogate Companies That May Have Received Government Subsidies
Comment 17.B: Use of TVS's Financial Statement
Comment 18: Calculation of Surrogate Financial Ratios
Comment 18.A: Treatment of Rental Receipts in TVS's Financial Statement
Comment 18.B: Treatment of ''Miscellaneous Income'' in Goodyear's Financial Statements
Comment 18.C: Treatment of Discounts and Rebates in the SG&A Ratio Calculation based on CEAT's Financial Statement
Comment 18.D: Offset for Interest Revenue in Goodyear's Financial Statement
Comment 18.E: Treatment of ''Less transfer from revaluation reserve'' in Falcon's Financial Statement
Comment 18.F: Treatment of ''Conversion Charges'' in CEAT, Falcon, and Goodyear's Financial Statements
Comment 18.G: Treatment of ''Labor Costs'' in CEAT, Falcon, Goodyear and TVS's Financial Statements
Comment 18.H: Treatment of Non–Production-Related Energy and Utility Consumption

II. Scope Issues

Comment 19: Imported Wheel Mounted Tires Certifications
Comment 20: OTR Agricultural Tires, Including for Highway–Towed Implements
Comment 21: Tubes and Flaps
Comment 22: Earthmoving, Mining, and Construction Tires

III. Targeted Dumping Issues

*Comment 23:*Targeted Dumping
Comment 23.A: Whether the Department Should Reject the Targeted Dumping Allegation Filed by Bridgestone
Comment 23.B: Whether the Targeted Dumping Test Used by the Department is Flawed and Should be Replaced
Comment 23.C: Whether the Department Should Use the ''P/2 Test'' to Test for Targeted Dumping
Comment 23.D: Whether the Department Should Use the ''T–Test'' to Test for Targeted Dumping
Comment 23.E: If the Department Continues to Use its *Nails* Test, Whether it Should Permit Certain Margins to be Offset with Negative Margins
Comment 23.F: Treatment of Xugong's Sales
Comment 23.G: Programming Errors
Comment 23.H: Changes based on *TD Methodology*

IV. Critical Circumstances

Comment 24: Critical Circumstances

V. Issues Specific to Guizhou Tyre

Comment 25: Guizhou Tyre's Eligibility for a Separate Rate
Comment 26: Treatment of Guizhou Tyre's Guangzhou Warehouse Expenses
Comment 27: Treatment of Guizhou Tyre's Reported Manufacturing Overhead Materials
Comment 28: Calculation of Guizhou Tyre's Domestic Movement Expenses
Comment 29: Treatment of Guizhou Tyre's Demurrage Charge
Comment 30: Distance from Guizhou Tyre's Factory to the Guangzhou Warehouse

Comment 31: Appropriate Unit of Measure for Guizhou Tyre's Reported Water Consumption
Comment 32: Treatment of Guizhou Tyre's Unreported Labor Hours Discovered at Verification
Comment 33: Classification of Guizhou Tyre's Sales Made to a Certain U.S. Customer
Comment 34: Byproduct Offset for Guizhou Tyre
Comment 35: Treatment of Guizhou Tyre's International Freight Costs
Comment 36: Appropriate Classification for Certain Guizhou Tyre Material Inputs
Comment 37: Calculation of Value of Guizhou Tyre's Carbon Black
Comment 38: Treatment of Guizhou Tyre's Sales Made Through TED
Comment 39: Whether to Include Licenses and Taxes in Guizhou Tyre's Indirect Selling Expense Ratio
Comment 40: Treatment of Guizhou Tyre's Billing Adjustment for Tubes and Flaps

VI. Issues Specific to Xugong

Comment 41: Treatment of Xugong and Its Chinese Affiliates as a Single Entity
Comment 42: Treatment of Xugong's Sales to API
Comment 43: Use of Xugong's Upstream Inputs
Comment 43.A: Rejection of Armour Rubber's Upstream Inputs
Comment 43.B: Adjustments of Xugong's Upstream Inputs
Comment 44: Valuation of Xugong's FOPs from Intermediate Inputs Database
Comment 45: Valuation of Xugong's FOPs from Upstream Inputs Database
Comment 46: Treatment of Sales with Improperly Reported Tread Code
Comment 47: Treatment of Xugong's Factor as Wood Tar or Pine Oil

VII. Issues Common to Starbright and TUTRIC

Comment 48.A: Whether TUTRIC and GPX are Affiliated
Comment 48.B: Whether TUTRIC and Starbright Should be Collapsed
Comment 49: Surrogate Value Sources for Scrap Rubber, Reclaimed Rubber, Rubber Powder and Wire
Comment 50: The Application of AFA for Sales of Tires Greater Than 39 Inches for Starbright and TUTRIC

VIII. Issues Specific to Starbright

Comment 51: Start–Up Adjustment for Starbright
Comment 52: Starbright Argues that the Department Should Adjust Normal Value for a CEP Offset and Differences in Circumstances of Sale
Comment 53: Investigation of Starbright's Sales Below Cost Should the Department Determines that Starbright Warrants MOE Treatment
Comment 54: Treatment of Unreported Sales of Subject Merchandise
Comment 55: Reliability of Starbright's Reported U.S. Sales Prices
Comment 56: Treatment of Starbright's Early Payment Discounts
Comment 57: Treatment of Tanggu Warehouse Expenses as an Adjustment to U.S. Price
Comment 58: Minor Correction to Freight–In Expenses
Comment 59: The Nature of WARR2U
Comment 60: Expenses Included in U.S. Duty
Comment 61: U.S. Warehousing Expenses
Comment 62: Dutiable Assists
Comment 63: Direct Labor Hours
Comment 64: Starbright's Indirect Labor Hours
Comment 65: Ministerial Errors With Respect to U.S. Credit Expenses
Comment 66: Marine Insurance
Comment 67: Correct Names for Certain Separate Rates Parties for Customs Instructions
Comment 68: Time Period for Measuring Starbright's U.S. Indirect Selling Expenses
Comment 69: Inclusion of Post–POI Credit Notes in the Section C Database
Comment 70: Purchases of Market–Economy Inputs from PRC Trading Companies as Market Economy Purchases
Comment 71: Allocation Methodology for U.S. Indirect Selling Expenses
Comment 72: Expenses Excluded from the Calculation of ISE
Comment 73: Starbright's U.S. Inland Freight Expense
Comment 74: The Adequacy of Starbright's Reported Material Consumption Standards, Variance Calculations and FOP Consumption Rate
Comment 75: Market–Economy Methodology for Starbright
Comment 76: Time Period For Determining ICC For Starbright's Retail Stores

IX. Issues Specific to TUTRIC

Comment 77: TUTRIC's Eligibility for a Separate Rate
Comment 78: TUTRIC's Sales to GPX Delivered to the Tanggu Warehouse
Comment 79: Sales and FOPs for Tubes and Flaps for TUTRIC
Comment 80: Treatment of Indirect Labor Hours for TUTRIC
Comment 81: Additional Calculation Errors With Respect to TUTRIC
Comment 82: The Adequacy of TUTRIC's Reported Material Consumption Standards, Variance Calculations and FOP Consumption Rate

[FR Doc. E8–16156 Filed 7–14–08; 8:45 am]
BILLING CODE 3510–DS–S

DEPARTMENT OF COMMERCE

International Trade Administration

[A–533–840]

Certain Frozen Warmwater Shrimp From India: Final Results and Partial Rescission of Antidumping Duty Administrative Review

AGENCY: Import Administration, International Trade Administration, Department of Commerce.

SUMMARY: On March 6, 2008, the Department of Commerce (the Department) published the preliminary results of the administrative review of the antidumping duty order on certain frozen warmwater shrimp (shrimp) from India. This review covers 201 producers/exporters of the subject merchandise to the United States. The period of review (POR) is February 1, 2006, through January 31, 2007. We are rescinding the review with respect to four companies because these companies had no reportable shipments of subject merchandise during the POR.

Based on our analysis of the comments received, we have made certain changes in the margin calculations. Therefore, the final results differ from the preliminary results. The final weighted-average dumping margins for the reviewed firms are listed below in the section entitled ''Final Results of Review.''

DATES: *Effective Date:* July 15, 2008.

FOR FURTHER INFORMATION CONTACT: Elizabeth Eastwood, AD/CVD Operations, Office 2, Import Administration, International Trade Administration, U.S. Department of Commerce, 14th Street and Constitution Avenue, NW., Washington, DC 20230; telephone (202) 482–3874.

SUPPLEMENTARY INFORMATION:

Background

This review covers 201 producers/exporters.[1] The respondents which the Department selected for individual review are Devi Sea Foods Limited (Devi) and Falcon Marine Exports Limited (Falcon). The respondents which were not selected for individual review are listed in the ''Final Results of Review'' section of this notice.

[1] This figure does not include those companies for which the Department is rescinding the administrative review.

On March 6, 2008, the Department published in the **Federal Register** the preliminary results of administrative review of the antidumping duty order on shrimp from India. *See Certain Frozen Warmwater Shrimp from India: Preliminary Results and Preliminary Partial Rescission of Antidumping Duty Administrative Review,* 73 FR 12103 (Mar. 6, 2008) (*Preliminary Results*).

We invited parties to comment on our preliminary results of review. In April 2008, we received case briefs from the petitioner (*i.e.*, the Ad Hoc Shrimp Trade Action Committee), the respondents (*i.e.*, Devi, Falcon, and Uniroyal Marine Exports Limited, a company not selected for individual review), and the Louisiana Shrimp Association (LSA). Also in April 2008, we received rebuttal briefs from the petitioner, Devi, and Falcon.

The Department has conducted this administrative review in accordance with section 751 of the Tariff Act of 1930, as amended (the Act).

Scope of the Order

The scope of this order includes certain frozen warmwater shrimp and prawns, whether wild-caught (ocean harvested) or farm-raised (produced by aquaculture), head-on or head-off, shell-on or peeled, tail-on or tail-off,[2] deveined or not deveined, cooked or raw, or otherwise processed in frozen form.

The frozen warmwater shrimp and prawn products included in the scope of this order, regardless of definitions in the Harmonized Tariff Schedule of the United States (HTSUS), are products which are processed from warmwater shrimp and prawns through freezing and which are sold in any count size.

The products described above may be processed from any species of warmwater shrimp and prawns. Warmwater shrimp and prawns are generally classified in, but are not limited to, the *Penaeidae* family. Some examples of the farmed and wild-caught warmwater species include, but are not limited to, whiteleg shrimp (*Penaeus vannemei*), banana prawn (*Penaeus merguiensis*), fleshy prawn (*Penaeus chinensis*), giant river prawn (*Macrobrachium rosenbergii*), giant tiger prawn (*Penaeus monodon*), redspotted shrimp (*Penaeus brasiliensis*), southern brown shrimp (*Penaeus subtilis*), southern pink shrimp (*Penaeus notialis*), southern rough shrimp (*Trachypenaeus curvirostris*), southern white shrimp (*Penaeus schmitti*), blue shrimp (*Penaeus stylirostris*), western white shrimp (*Penaeus occidentalis*), and Indian white prawn (*Penaeus indicus*).

Frozen shrimp and prawns that are packed with marinade, spices or sauce are included in the scope of this order. In addition, food preparations, which are not ''prepared meals,'' that contain more than 20 percent by weight of shrimp or prawn are also included in the scope of this order.

Excluded from the scope are: (1) Breaded shrimp and prawns (HTSUS subheading 1605.20.10.20); (2) shrimp and prawns generally classified in the *Pandalidae* family and commonly referred to as coldwater shrimp, in any state of processing; (3) fresh shrimp and prawns whether shell-on or peeled (HTSUS subheadings 0306.23.00.20 and 0306.23.00.40); (4) shrimp and prawns in prepared meals (HTSUS subheading 1605.20.05.10); (5) dried shrimp and prawns; (6) canned warmwater shrimp and prawns (HTSUS subheading 1605.20.10.40); (7) certain dusted shrimp; and (8) certain battered shrimp. Dusted shrimp is a shrimp-based product: (1) That is produced from fresh (or thawed-from-frozen) and peeled shrimp; (2) to which a ''dusting'' layer of rice or wheat flour of at least 95 percent purity has been applied; (3) with the entire surface of the shrimp flesh thoroughly and evenly coated with the flour; (4) with the non-shrimp content of the end product constituting between four and 10 percent of the product's total weight after being dusted, but prior to being frozen; and (5) that is subjected to IQF freezing immediately after application of the dusting layer. Battered shrimp is a shrimp-based product that, when dusted in accordance with the definition of dusting above, is coated with a wet viscous layer containing egg and/or milk, and par-fried.

The products covered by this order are currently classified under the following HTSUS subheadings: 0306.13.00.03, 0306.13.00.06, 0306.13.00.09, 0306.13.00.12, 0306.13.00.15, 0306.13.00.18, 0306.13.00.21, 0306.13.00.24, 0306.13.00.27, 0306.13.00.40, 1605.20.10.10, and 1605.20.10.30. These HTSUS subheadings are provided for convenience and for customs purposes only and are not dispositive, but rather the written description of the scope of this order is dispositive.

Period of Review

The POR is February 1, 2006, through January 31, 2007.

Partial Rescission of Review

In February 2007, the Department received timely requests, in accordance with 19 CFR 351.213(b)(1), from the petitioner and the LSA to conduct a review of many Indian producers/exporters, including four affiliated Indian producers/exporters of subject merchandise collectively known as ''the Kadalkanny Group'' (*i.e.*, Kadalkanny Frozen Foods (Kadalkanny), Edhayam Frozen Foods Pvt. Ltd. (Edhayam), Diamond Seafood Exports (Diamond), and Theva & Co. (Theva)). The Department initiated a review of these four companies and requested that they supply data on the quantity and value (Q&V) of their exports of shrimp during the POR. *See Notice of Initiation of Administrative Reviews of the Antidumping Duty Orders on Certain Frozen Warmwater Shrimp From Brazil, Ecuador, India and Thailand*, 72 FR 17100 (Apr. 6, 2007). On April 23, 2007, the Kadalkanny Group submitted a consolidated response to the Department's Q&V questionnaire, in which it indicated that only one of its members (*i.e.*, Kadalkanny) exported subject merchandise to the United States during the POR.

Both the petitioner and the LSA withdrew their administrative review requests for Kadalkanny. Moreover, we confirmed with U.S. Customs and Border Protection (CBP) the claims made by two additional members of this group, Diamond and Theva, that they had no shipments of subject merchandise during the POR. Finally, on January 17 and February 7, 2008, we received information from Edhayam which demonstrated that its sole entry of subject merchandise during the POR was not a reportable transaction because it was a free sample, for which Edhayam received no remuneration. Therefore, in accordance with 19 CFR 351.213(d)(3), and consistent with the Department's practice, we are rescinding our review with respect to the Kadalkanny Group. *See, e.g., Certain Steel Concrete Reinforcing Bars From Turkey; Final Results, Rescission of Antidumping Duty Administrative Review in Part, and Determination To Revoke in Part*, 70 FR 67665, 67666 (Nov. 8, 2005).

Successor-in-Interest

As noted in the *Preliminary Results*, in April and May 2007, two of the producers/exporters named in the notice of initiation, Asvini Fisheries Limited and Surya Marine Exports (Surya Marine), informed the Department that, prior to the POR, they changed their names and are now doing business under the names Asvini

[2] ''Tails'' in this context means the tail fan, which includes the telson and the uropods.

Fisheries Private Limited (Asvini) and Suryamitra Exim Private Limited (Suryamitra), respectively. Based on Asvini's and Suryamitra's submissions addressing the four factors with respect to this change in corporate structure (*i.e.*, management, production facilities for the subject merchandise, supplier relationships, and customer base),[3] in the preliminary results we preliminarily found that these companies' organizational structure, management, production facilities, supplier relationships, and customers have remained essentially unchanged. Further, we found that Asvini operates as the same business entity as Asvini Fisheries Limited with respect to the production and sale of shrimp and that Suryamitra operates as the same business entity as Surya Marine. Therefore, we preliminarily determined that Asvini and Suryamitra are the successors-in-interest to Asvini Fisheries Limited and Surya Marine, respectively. *See Preliminary Results*, 73 FR at 12105–06.

Since the preliminary results, no party to this proceeding has commented on this issue, and we have received no new information with respect to this issue. As a result, we continue to find that Asvini and Suryamitra are the successors-in-interest to Asvini Fisheries Limited and Surya Marine, respectively.

Facts Available

In the preliminary results, we determined that, in accordance with sections 776(a)(2)(A) and (C) of the Act, the use of facts available was appropriate as the basis for the dumping margins for 127 producers/exporters. *See Preliminary Results*, 73 FR at 12107–08. These companies are listed in the ''Final Results of Review'' section of this notice under the heading ''AFA Rate Applicable to the Following Companies.''

Section 776(a) of the Act provides that the Department will apply ''facts otherwise available'' if, *inter alia*, necessary information is not available on the record or an interested party: (1) Withholds information that has been requested by the Department; (2) fails to provide such information within the deadlines established, or in the form or manner requested by the Department; (3) significantly impedes a proceeding; or (4) provides such information, but the information cannot be verified.

In April 2007, the Department requested that all companies subject to review respond to the Department's Q&V questionnaire for purposes of mandatory respondent selection. The original deadline to file a response was April 23, 2007. Of the 319 companies initially subject to review, numerous companies did not respond to the Department's initial requests for information. Subsequently, in May 2007 and then again in June 2007, the Department issued letters to these companies affording them additional opportunities to submit a response to the Department's Q&V questionnaire. However, 126 companies also failed to respond to the Department's final requests for Q&V data.[4] On February 25, 2008, the Department placed documentation on the record confirming delivery of the questionnaires to each of these companies. *See* the memorandum to the File from Elizabeth Eastwood, Senior Analyst, entitled, ''Placing Delivery Information on the Record of the 2006–2007 Antidumping Duty Administrative Review on Certain Frozen Warmwater Shrimp from India,'' dated February 25, 2008. By failing to respond to the Department's Q&V questionnaire, these companies withheld requested information and significantly impeded the proceeding. Thus, pursuant to sections 776(a)(2)(A) and (C) of the Act, because these companies did not respond to the Department's questionnaire, the Department finds that the use of total facts available is warranted.

Further, one additional company, Gajula, claimed that it made no shipments of subject merchandise to the United States during the POR. However, because we were unable to confirm the accuracy of Gajula's claim with CBP, we requested further information/clarification from this exporter. Gajula responded to the Department's inquiry via e-mail on August 16, 2007, but did not indicate if its submission contained either public or business proprietary information. Therefore, on August 16, 2007, we informed Gajula via e-mail of the Department's filing requirements. *See* the memorandum to the File from Nichole Zink, Analyst, entitled, ''Placing E-mail to Gajula Exim (P) Ltd. on the Record in the 2006–2007 Antidumping Duty Administrative Review of Certain Frozen Warmwater Shrimp from India,'' dated August 16, 2007. On August 22, 2007, Gajula submitted a hard copy of its response, but again failed to follow the Department's filing requirements and failed to indicate if the submission contained business proprietary or public information. On September 7, 2007, we issued a letter to Gajula again informing the company of the Department's filing requirements, providing information regarding the treatment of proprietary information and the preparation of a public version of a response, and requiring it to properly file its response. On September 29, 2007, Gajula faxed a letter to the Department in which it stated that the information contained in its August submission should be treated as business proprietary information. However, Gajula did not indicate the specific information in the August submission which should be designated as business proprietary. As a result, on October 1 and 17, 2007, we provided Gajula additional detailed instructions regarding the treatment of proprietary information and the preparation of a public version of a response, and we again required it to properly file its submissions on the record of this proceeding. *See* the memorandum to the File from Elizabeth Eastwood, Senior Analyst, entitled, ''Placing October E-Mail Correspondence with Gajula Exim (P) Ltd. on the Record of the 2006–2007 Antidumping Duty Administrative Review of Certain Frozen Warmwater Shrimp from India,'' dated October 17, 2007. Gajula failed to respond to the Department's October communications and did not remedy the deficiencies in its August submission.

Although the Department afforded Gajula multiple opportunities to correct the procedural deficiencies in its response, it failed to do so. By failing to respond to the Department's requests, Gajula withheld requested information and significantly impeded the proceeding. Consequently, pursuant to sections 776(a)(2)(A) and (C) of the Act, the Department finds that the use of total facts available for Gajula is appropriate.

Adverse Facts Available

In selecting from among the facts otherwise available, section 776(b) of the Act authorizes the Department to use an adverse inference if the Department finds that an interested party failed to cooperate by not acting to the best of its ability to comply with the request for information. *See, e.g., Notice of Final Results of Antidumping Duty Administrative Review: Stainless Steel Bar from India*, 70 FR 54023, 54025–26 (Sept. 13, 2005); *see also*

[3] *See Notice of Initiation and Preliminary Results of Antidumping Duty Changed Circumstances Review: Certain Softwood Lumber Products from Canada*, 70 FR 50299, 50300–01 (Aug. 26, 2005) (setting forth the four factors to be considered for successorship determinations), unchanged in *Notice of Final Results of Antidumping Duty Changed Circumstances Review: Certain Softwood Lumber Products from Canada*, 70 FR 59721 (Oct. 13, 2005).

[4] These companies are listed in the ''Final Results of Review'' section of this notice under the heading ''AFA Rate Applicable to the Following Companies.''

Notice of Final Determination of Sales at Less Than Fair Value and Final Negative Critical Circumstances: Carbon and Certain Alloy Steel Wire Rod from Brazil, 67 FR 55792, 55794–96 (Aug. 30, 2002). Adverse inferences are appropriate ''to ensure that the party does not obtain a more favorable result by failing to cooperate than if it had cooperated fully.'' *See* Statement of Administrative Action accompanying the Uruguay Round Agreements Act, H.R. Rep. No. 103–316, Vol. 1, at 870 (1994), reprinted in 1994 U.S.C.C.A.N. 4040, 4199. Furthermore, ''affirmative evidence of bad faith on the part of a respondent is not required before the Department may make an adverse inference.'' *See Antidumping Duties; Countervailing Duties*, 62 FR 27296, 27340 (May 19, 1997). *See also Nippon Steel Corp.* v. *United States*, 337 F.3d 1373, 1382 (Fed. Cir. 2003) (*Nippon*) (''the statute does not contain an intent element''). We find that 126 of the 127 companies listed under the heading ''AFA Rate Applicable to the Following Companies'' in the ''Final Results of Review'' section of this notice, below, did not act to the best of their abilities in this proceeding, within the meaning of section 776(b) of the Act, because it is reasonable to expect companies to possess information about their own export activities, but these 126 companies failed to respond to the Department's requests for this information. The 127th company, Gajula, failed to respond to the Department's requests to correct the procedural deficiencies in its response, discussed in the ''Fact Available'' section of this notice, above. Therefore, an adverse inference is warranted in selecting facts otherwise available for all 127 companies. *See Nippon*, 337 F.3d at 1382–83.

Section 776(b) of the Act provides that the Department may use as AFA information derived from: (1) The petition; (2) the final determination in the investigation; (3) any previous review; or (4) any other information placed on the record.

The Department's practice, when selecting an AFA rate from among the possible sources of information, has been to ensure that the margin is sufficiently adverse ''as to effectuate the statutory purposes of the adverse facts available rule to induce respondents to provide the Department with complete and accurate information in a timely manner.'' *Notice of Final Determination of Sales at Less Than Fair Value and Final Negative Critical Circumstances: Carbon and Certain Alloy Steel Wire Rod from Brazil*, 67 FR 55792, 55796 (Aug. 30, 2002); *see also Notice of Final Determination of Sales at Less Than Fair Value: Static Random Access Memory Semiconductors From Taiwan*, 63 FR 8909, 8932 (Feb. 23, 1998).

In order to ensure that the margin is sufficiently adverse so as to induce cooperation, we have assigned a rate of 110.90 percent, which was the highest rate alleged in the petition, as adjusted at the initiation of the less-than-fair-value (LTFV) investigation, to the 127 companies listed below. *See Notice of Initiation of Antidumping Duty Investigations: Certain Frozen and Canned Warmwater Shrimp From Brazil, Ecuador, India, Thailand, the People's Republic of China and the Socialist Republic of Vietnam*, 69 FR 3876, 3880 (Jan. 27, 2004). The Department finds that this rate is sufficiently high as to effectuate the purpose of the AFA rule (*i.e.*, we find that this rate is high enough to encourage participation in future segments of this proceeding in accordance with section 776(b) of the Act).

For the reasons stated in the *Preliminary Results*, we continue to find that the information upon which this margin is based has probative value and thus satisfies the corroboration requirements of section 776(c) of the Act. *See Preliminary Results*, 73 FR at 12108. *See also* the July 7, 2008, memorandum from Henry Almond to the file entitled, ''Corroboration of Adverse Facts Available Rate for the Final Results in the 2006–2007 Antidumping Duty Administrative Review of Certain Frozen Warmwater Shrimp from India.''

Cost of Production

As discussed in the preliminary results, we conducted an investigation to determine whether Devi and Falcon made third country sales of the foreign like product during the POR at prices below their costs of production (COP) within the meaning of section 773(b) of the Act. *See Preliminary Results*, 73 FR at 12111–12112. For these final results, we performed the cost test following the same methodology as in the *Preliminary Results*, except as discussed in the Issues and Decision Memorandum (the Decision Memo).

We found 20 percent or more of each respondent's sales of a given product during the reporting period were at prices less than the weighted-average COP for this period. Thus, we determined that these below-cost sales were made in ''substantial quantities'' within an extended period of time and at prices which did not permit the recovery of all costs within a reasonable period of time in the normal course of trade. *See* sections 773(b)(1)-(2) of the Act.

Therefore, for purposes of these final results, we found that Devi and Falcon made below-cost sales not in the ordinary course of trade. Consequently, we disregarded these sales for each respondent and used the remaining sales as the basis for determining normal value pursuant to section 773(b)(1) of the Act.

Analysis of Comments Received

All issues raised in the case briefs by parties to this administrative review, and to which we have responded, are listed in the Appendix to this notice and addressed in the Decision Memo, which is adopted by this notice. Parties can find a complete discussion of all issues raised in this review and the corresponding recommendations in this public memorandum, which is on file in the Central Records Unit, room 1117, of the main Department building.

In addition, a complete version of the Decision Memo can be accessed directly on the Web at *http://ia.ita.doc.gov/frn/*. The paper copy and electronic version of the Decision Memo are identical in content.

Changes Since the Preliminary Results

Based on our analysis of the comments received, we have made certain changes in the margin calculations. These changes are discussed in the relevant sections of the Decision Memo.

Final Results of Review

We determine that the following weighted-average margin percentages exist for the period February 1, 2006, through January 31, 2007:

Manufacturer/Exporter	Percent margin
Devi Sea Foods Limited	*0.35
Falcon Marine Exports Limited	1.69
Review-Specific Average Rate Applicable to the Following Companies:[5]	
Ananda Aqua Exports (P) Ltd.	1.69

Manufacturer/Exporter	Percent margin
Ananda Foods	1.69
Andaman Sea Foods Pvt. Ltd.	1.69
Angelique International Ltd.	1.69
Apex Exports	1.69
Asvini Exports	1.69
Asvini Fisheries Limited/Asvini Fisheries Private Limited	1.69
Avanti Feeds Limited	1.69
Bhatsons Aquatic Products	1.69
Bluepark Seafoods Pvt. Ltd.	1.69
Calcutta Seafoods	1.69
Castlerock Fisheries Pvt. Ltd.	1.69
Choice Canning Company	1.69
Choice Trading Corporation Pvt. Ltd.	1.69
Coreline Exports	1.69
Devi Fisheries Limited	1.69
Digha Sea Food Exports	1.69
Five Star Marine Exports Private Limited	1.69
GVR Exports Pvt. Ltd.	1.69
Gayatri Sea Foods	1.69
Haripriya Marine Export Pvt. Ltd.	1.69
Hindustan Lever, Ltd.	1.69
IFB Agro Industries Limited	1.69
ITC Limited, International Business Division	1.69
Jaya Satya Marine Exports Pvt. Ltd.	1.69
Jaya Lakshmi Sea Foods Pvt. Ltd.	1.69
K V Marine Exports	1.69
Kings Marine Products	1.69
Konark Aquatics & Exports Pvt. Ltd.	1.69
Magnum Estate Private Limited	1.69
Magnum Export	1.69
Magnum Sea Foods Private Limited	1.69
Mangala Marine Exim India Pvt. Ltd.	1.69
Mangala Sea Products	1.69
NGR Aqua International	1.69
Navayuga Exports Ltd.	1.69
Nekkanti Sea Foods Limited	1.69
Nila Sea Foods Pvt. Ltd.	1.69
Penver Products (P) Ltd.	1.69
RVR Marine Products Private Limited	1.69
Raa Systems Pvt. Ltd.	1.69
Raju Exports	1.69
Ram's Assorted Cold Storage Ltd.	1.69
S A Exports	1.69
Sagar Grandhi Exports Pvt. Ltd.	1.69
Sai Marine Exports Pvt. Ltd.	1.69
Sandhya Marines Limited	1.69
Satya Seafoods Private Limited	1.69
Seagold Overseas Pvt. Ltd.	1.69
Selvam Exports Private Limited	1.69
Sprint Exports Pvt. Ltd.	1.69
Sri Chandrakantha Marine Exports	1.69
Sri Sakthi Marine Products P Ltd.	1.69
Star Agro Marine Exports Private Limited	1.69
Sun-Bio Technology Limited	1.69
Surya Marine Exports/Suryamitra Exim Private Limited	1.69
Suvarna Rekha Exports Private Limited	1.69
Suvarna Rekha Marines P Ltd.	1.69
The Liberty Group (Devi Marine Food Exports Private Limited/Kader Exports Private Limited/Kader Investment and Trading Company Private Limited/Liberty Frozen Foods Private Limited/Liberty Oil Mills Limited/Premier Marine Products/Universal Cold Storage Private Limited)	1.69
The Waterbase Ltd.	1.69
Usha Seafoods	1.69
Veejay IMPEX	1.69
Vinner Marine	1.69
Wellcome Fisheries Limited	1.69
AFA Rate Applicable to the Following Companies:	
A.S. Marine Industries Pvt. Ltd.	110.90
Adani Exports Ltd.	110.90
Aditya Udyog	110.90
Agri Marine Exports Ltd.	110.90
Al Mustafa Exp & Imp	110.90
Alapatt Marine Exports	110.90
All Seas Marine P. Ltd.	110.90
Alsa Marine & Harvests Ltd.	110.90

Manufacturer/Exporter	Percent margin
Ameena Enterprises	110.90
Anjani Marine Traders	110.90
Aqua Star Marine Foods	110.90
Arsha Seafood Exports Pvt. Ltd.	110.90
ASF Seafoods	110.90
Ashwini Frozen Foods	110.90
Aswin Associates	110.90
Balaji Seafood Exports I Ltd.	110.90
Baraka Overseas Traders	110.90
Bell Foods (Marine Division)	110.90
Bharat Seafoods	110.90
Bhisti Exports	110.90
Bilal Fish Suppliers	110.90
Capital Freezing Complex	110.90
Cham Exports Ltd.	110.90
Cham Ocean Treasures Co., Ltd.	110.90
Cham Trading Organization	110.90
Chand International	110.90
Danda Fisheries	110.90
Dariapur Aquatic Pvt. Ltd.	110.90
Deepmala Marine Exports	110.90
Dhanamjaya Impex P. Ltd.	110.90
Dorothy Foods	110.90
El-Te Marine Products	110.90
Excel Ice Services/Chirag Int'l	110.90
Firoz & Company	110.90
Freeze Engineering Industries (Pvt. Ltd.)	110.90
Gajula Exim (P) Ltd.	110.90
Gausia Cold Storage P. Ltd.	110.90
Goan Bounty	110.90
Gold Farm Foods (P) Ltd.	110.90
Golden Star Cold Storage	110.90
Gopal Seafoods	110.90
Gtc Global Ltd.	110.90
Hanswati Exports P. Ltd.	110.90
HMG Industries Ltd.	110.90
Honest Frozen Food Company	110.90
India CMS Adani Exports	110.90
India Seafoods	110.90
Indian Seafood Corporation	110.90
Interfish	110.90
J R K Seafoods Pvt. Ltd.	110.90
Kaushalya Aqua Marine Product Exports Pvt. Ltd.	110.90
Keshodwala Foods	110.90
Key Foods	110.90
King Fish Industries	110.90
Konkan Fisheries Pvt. Ltd.	110.90
Lakshmi Marine Products	110.90
Lansea Foods Pvt. Ltd.	110.90
Laxmi Narayan Exports	110.90
M K Exports	110.90
M.R.H. Trading Company	110.90
Malabar Marine Exports	110.90
Mamta Cold Storage	110.90
Marina Marine Exports	110.90
Marine Food Packers	110.90
Miki Exports International	110.90
Mumbai Kamgar MGSM Ltd.	110.90
N.C. Das & Company	110.90
Naik Ice & Cold Storage	110.90
Nas Fisheries Pvt Ltd.	110.90
National Seafoods Company	110.90
New Royal Frozen Foods	110.90
Noble Aqua Pvt. Ltd.	110.90
Omsons Marines Ltd.	110.90
Padmaja Exports	110.90
Partytime Ice Pvt Ltd.	110.90
Philips Foods India Pvt Ltd.	110.90
Premier Exports International	110.90
R K Ice & Cold Storage	110.90
Rahul Foods (GOA)	110.90
Rahul International	110.90
Raj International	110.90
Ramalmgeswara Proteins & Foods Ltd.	110.90

Manufacturer/Exporter	Percent margin
Rameshwar Cold Storage	110.90
Ravi Frozen Foods Ltd.	110.90
Regent Marine Industries	110.90
Relish Foods	110.90
Royal Link Exports	110.90
Rubian Exports	110.90
Ruby Marine Foods	110.90
Ruchi Worldwide	110.90
S K Exports (P) Ltd.	110.90
SLS Exports Pvt. Ltd.	110.90
S S International	110.90
Sabri Food Products	110.90
Sagar Samrat Seafoods	110.90
Salet Seafoods Pvt Ltd.	110.90
Samrat Middle East Exports (P) Ltd.	110.90
Sarveshwari Ice & Cold Storage P Ltd.	110.90
Satyam Marine Exports	110.90
Sea Rose Marines (P) Ltd.	110.90
Sealand Fisheries Ltd.	110.90
Seaperl Industries	110.90
Sharat Industries Ltd.	110.90
Shimpo Exports	110.90
Shipper Exporter National Steel	110.90
Siddiq Seafoods	110.90
Skyfish	110.90
Sonia Fisheries	110.90
Sourab	110.90
Sreevas Export Enterprises	110.90
Sri Sidhi Freezers & Exporters Pvt. Ltd.	110.90
Star Fish Exports	110.90
Supreme Exports	110.90
The Canning Industries (Cochin) Ltd.	110.90
Tony Harris Seafoods Ltd.	110.90
Tri Marine Foods Pvt. Ltd.	110.90
Trinity Exports	110.90
Tri-Tee Seafood Company	110.90
Ulka Seafoods (P) Ltd.	110.90
Uniroyal Marine Exports Ltd.	110.90
Upasana Exports	110.90
V Marine Exports	110.90
Varnita Cold Storage	110.90
Veraval Marines & Chemicals P Ltd.	110.90
Vijayalaxmi Seafoods	110.90
Winner Seafoods	110.90
Z A. Food Products	110.90

* *de minimus*.

Assessment

The Department shall determine, and CBP shall assess, antidumping duties on all appropriate entries.

Pursuant to 19 CFR 351.212(b)(1), because Devi and Falcon reported the entered value for some or all of their U.S. sales, we have calculated importer-specific *ad valorem* duty assessment rates based on the ratio of the total amount of antidumping duties calculated for the examined sales to the total entered value of the sales which entered value was reported. For Falcon's U.S. sales reported without entered values, we have calculated importer-specific per-unit duty assessment rates by aggregating the total amount of antidumping duties calculated for the examined sales and dividing this amount by the total quantity of those sales. To determine whether the duty assessment rates are *de minimis*, in accordance with the requirement set forth in 19 CFR 351.106(c)(2), we have calculated importer-specific *ad valorem* ratios based on the estimated entered value.

For the responsive companies which were not selected for individual review, we have calculated an assessment rate based on the weighted average of the cash deposit rates calculated for the companies selected for individual review excluding any which are *de minimis* or determined entirely on AFA.

Pursuant to 19 CFR 351.106(c)(2), we will instruct CBP to liquidate without regard to antidumping duties any entries for which the assessment rate is *de minimis* (*i.e.*, less than 0.50 percent). The Department intends to issue assessment instructions to CBP 15 days after the date of publication of these final results of review.

The Department clarified its ''automatic assessment'' regulation on May 6, 2003. *See Antidumping and Countervailing Duty Proceedings: Assessment of Antidumping Duties,* 68 FR 23954 (May 6, 2003). This clarification will apply to entries of subject merchandise during the POR produced by companies included in these final results of review for which the reviewed companies did not know their merchandise was destined for the United States. This clarification will also apply to POR entries of subject merchandise produced by companies for which we are rescinding the review based on certifications of no shipments,

[5] This rate is based on the weighted average of the margins calculation for those companies selected for individual review, excluding *de minimis* margins or margins based entirely on AFA.

because these companies certified that they made no POR shipments of subject merchandise for which they had knowledge of U.S. destination. In such instances, we will instruct CBP to liquidate unreviewed entries at the all-others rate established in the LTFV investigation if there is no rate for the intermediate company(ies) involved in the transaction.

Cash Deposit Requirements

Further, the following deposit requirements will be effective for all shipments of shrimp from India entered, or withdrawn from warehouse, for consumption on or after the publication date of the final results of this administrative review, as provided for by section 751(a)(2)(C) of the Act: (1) The cash deposit rates for the reviewed companies will be the rates shown above, except if the rate is less than 0.50 percent, *de minimis* within the meaning of 19 CFR 351.106(c)(1), the cash deposit will be zero; (2) for previously investigated companies not listed above, the cash deposit rate will continue to be the company-specific rate published for the most recent period; (3) if the exporter is not a firm covered in this review, or the LTFV investigation, but the manufacturer is, the cash deposit rate will be the rate established for the most recent period for the manufacturer of the merchandise; and (4) the cash deposit rate for all other manufacturers or exporters will continue to be 10.17 percent, the all-others rate established in the LTFV investigation. *See Notice of Amended Final Determination of Sales at Less Than Fair Value and Antidumping Duty Order: Certain Frozen Warmwater Shrimp from India,* 70 FR 5147, 5148 (Feb. 1, 2005). These deposit requirements shall remain in effect until further notice.

Notification to Importers

This notice serves as a final reminder to importers of their responsibility, under 19 CFR 351.402(f)(2), to file a certificate regarding the reimbursement of antidumping duties prior to liquidation of the relevant entries during this review period. Failure to comply with this requirement could result in the Secretary's presumption that reimbursement of antidumping duties occurred and the subsequent assessment of double antidumping duties.

Notification to Interested Parties

This notice serves as the only reminder to parties subject to administrative protective order (APO) of their responsibility concerning the disposition of proprietary information disclosed under APO in accordance with 19 CFR 351.305(a)(3). Timely written notification of return/destruction of APO materials or conversion to judicial protective order is hereby requested. Failure to comply with the regulations and the terms of an APO is a sanctionable violation.

We are issuing and publishing these results of review in accordance with sections 751(a)(1) and 777(i)(1) of the Act.

Dated: July 7, 2008.

David M. Spooner,

Assistant Secretary for Import Administration.

Appendix—Issues in Decision Memorandum

General Issues

1. Offsetting of Negative Margins.
2. Whether the Department's Decision to Select Only Two Mandatory Respondents was Supported by Evidence on the Record.
3. Continuing to Apply AFA to Uncooperative Respondents for the Final Results.
4. Ministerial Errors in the Preliminary Results.

Company-Specific Issues

5. What Date to Assign to Unpaid U.S. Sales for Devi.
6. Devi's Raw Material Costs.
7. Devi's Compliance with Indian Licensing Requirements.
8. Whether to Include in Margin Calculations Previously Reviewed U.S. Sales for Falcon Which Entered during the Period of Review.
9. Falcon's Raw Material Costs.
10. Whether to Base the Final Margin for Uniroyal Marine Exports on AFA.

[FR Doc. E8–16152 Filed 7–14–08; 8:45 am]

BILLING CODE 3510–DS–P

DEPARTMENT OF COMMERCE

International Trade Administration

[A–557–813]

Polyethylene Retail Carrier Bags from Malaysia: Notice of Rescission of Administrative Review

AGENCY: Import Administration, International Trade Administration, Department of Commerce.

SUMMARY: In response to requests by interested parties, the Department of Commerce (Department) initiated an administrative review of the antidumping duty order on polyethylene retail carrier bags (PRCBs) from Malaysia with respect to three producers/exporters of the subject merchandise. The period of review (POR) is August 1, 2006, through July 31, 2007. The Department is now rescinding this administrative review in its entirety.

EFFECTIVE DATE: July 15, 2008.

FOR FURTHER INFORMATION CONTACT: Lyn Johnson or Richard Rimlinger, AD/CVD Operations, Office 5, Import Administration, International Trade Administration, U.S. Department of Commerce, 14th Street and Constitution Avenue, NW, Washington, DC 20230; telephone: (202) 482–5287 and (202) 482–4477, respectively.

SUPPLEMENTARY INFORMATION:

Background

On May 6, 2008, the Department published a *Notice of Partial Rescission of the Administrative Review and Intent to Rescind the Administrative Review*, 73 FR 24941 (May 6, 2008) (*Intent to Rescind*), where it rescinded the review of the antidumping duty order on PRCBs from Malaysia with respect to King Pac and announced its intent to rescind the review with respect to Euro Plastics Malaysia Sdn. Bhd. and its affiliate Eplastics Procurement Center Sdn. Bhd. (Euro Plastics) and with respect to Zhin Hin Plastic Manufacturer Sdn. Bhd. (also known as Chin Hin Plastic Manufacture) (Zhin Hin).

Scope of the Order

The merchandise subject to this antidumping duty order is PRCBs which may be referred to as t–shirt sacks, merchandise bags, grocery bags, or checkout bags. The subject merchandise is defined as non–sealable sacks and bags with handles (including drawstrings), without zippers or integral extruded closures, with or without gussets, with or without printing, of polyethylene film having a thickness no greater than 0.035 inch (0.889 mm) and no less than 0.00035 inch (0.00889 mm), and with no length or width shorter than 6 inches (15.24 cm) or longer than 40 inches (101.6 cm). The depth of the bag may be shorter than 6 inches (15.24 cm) but not longer than 40 inches (101.6 cm).

PRCBs are typically provided without any consumer packaging and free of charge by retail establishments, *e.g.*, grocery, drug, convenience, department, specialty retail, discount stores, and restaurants, to their customers to package and carry their purchased products. The scope of the order excludes (1) polyethylene bags that are not printed with logos or store names and that are closeable with drawstrings made of polyethylene film and (2) polyethylene bags that are packed in consumer packaging with printing that

refers to specific end–uses other than packaging and carrying merchandise from retail establishments, *e.g.*, garbage bags, lawn bags, trash–can liners.Imports of the subject merchandise are currently classifiable under statistical category 3923.21.0085 of the Harmonized Tariff Schedule of the United States (HTSUS). Furthermore, although the HTSUS subheading is provided for convenience and customs purposes, the written description of the scope of this order is dispositive.

Rescission of the Administrative Review

In *Intent to Rescind*, 73 FR at 24942, we gave interested parties an opportunity to comment by June 5, 2008. We did not receive any comments. Therefore, consistent with *Intent to Rescind*, we continue to find that Euro Plastics and Zhin Hin (the only remaining companies in this review) had no entries of subject merchandise during the POR. Accordingly, we are rescinding this administrative review in its entirety pursuant to 19 CFR 351.213(d)(3).

This notice serves as a reminder to parties subject to the administrative protective order (APO) of their responsibility concerning the disposition of proprietary information disclosed under APO in accordance with 19 CFR 351.305(a)(3). Timely written notification of the return or destruction of APO materials or conversion to judicial protective order is hereby requested. Failure to comply with the regulations and terms of an APO is a sanctionable violation.

We are issuing and publishing this notice in accordance with sections 751(a)(1) and 777(i)(1) of the Act.

Dated: July 08, 2008.

Stephen J. Claeys,

Deputy Assistant Secretary for Import Administration.

[FR Doc. E8–16153 Filed 7–14–08; 8:45 am]

BILLING CODE 3510–DS–S

DEPARTMENT OF COMMERCE

National Institute of Standards and Technology

Alternative Personnel Management System (APMS) at the National Institute of Standards and Technology

AGENCY: National Institute of Standards and Technology, Department of Commerce.

ACTION: Notice of Modifications with Request for Comment.

SUMMARY: This notice provides for changes to the existing provisions of the National Institute of Standards and Technology's (NIST) Alternative Personnel Management System (APMS) published October 21, 1997 (62 FR 54606), and May 6, 2005 (70 FR 23996) primarily to improve flexibility in rewarding new and mid-level employees and to broaden the ability to make performance distinctions.

DATES: This notice is effective on October 1, 2008. Comments will be accepted until close of business on August 14, 2008.

ADDRESSES: Send or deliver comments to Robert Kirkner, Chief Human Capital Officer, National Institute of Standards and Technology, Building 101, Room A–531, 100 Bureau Drive Mail Stop 1700, Gaithersburg, MD 20899–1700, FAX: (301) 948–6107 or e-mail comments to *ppschanges@nist.gov*.

FOR FURTHER INFORMATION CONTACT: For questions or comments, please contact Robert Kirkner at the National Institute of Standards and Technology, (301) 975–3002; or Pamela Boyland at the U.S. Department of Commerce, (202) 482–1068.

SUPPLEMENTARY INFORMATION:

Background

In accordance with Public Law 99–574, the NIST Authorization Act for 1987, the Office of Personnel Management (OPM) approved a demonstration project plan, ''Alternative Personnel Management System (APMS) at the National Institute of Standards and Technology (NIST),'' and published the plan in the **Federal Register** on October 2, 1987 (52 FR 37082). The project plan has been modified twice to clarify certain NIST authorities (54 FR 21331 of May 17, 1989, and 55 FR 39220 of September 25, 1990). The project plan and subsequent amendments were consolidated in the final APMS plan, which became permanent on October 21, 1997, (62 FR 54604). NIST published an amendment on May 6, 2005 (70 FR 23996) which became permanent on June 6, 2005.

The plan provides for modifications to be made as experience is gained, results are analyzed, and conclusions are reached on how the system is working. This notice formally modifies the APMS plan to refine the links between pay and performance. Comments will be considered and any changes deemed necessary will be made.

Dated: July 7, 2008.

James M. Turner,

Deputy Director.

Table of Contents

I. Executive Summary
II. Basis for APMS Plan Modification
III. Changes in the APMS Plan

I. Executive Summary

The National Institute of Standards and Technology's (NIST) Alternative Personnel Management System (APMS) is designed to (1) Improve hiring and allow NIST to compete more effectively for high-quality researchers through direct hiring, selective use of higher entry salaries, and selective use of recruiting allowances; (2) motivate and retain staff through higher pay potential, pay-for-performance, more responsive personnel systems, and selective use of retention allowances; (3) strengthen the manager's role in personnel management through delegation of personnel authorities; and (4) increase the efficiency of personnel systems through installation of a simpler and more flexible classification system based on pay banding through reduction of guidelines, steps, and paperwork in classification, hiring, and other personnel systems, and through automation.

Since implementing the APMS, according to findings in the Office of Personnel Management's ''Summative Evaluation Report National Institute of Standards and Technology Demonstration Project: 1988–1995,'' NIST is more competitive for talent; NIST retained more top performers than a comparison group; and NIST managers reported significantly more authority to make decisions concerning employee pay. This modification builds on this success by refining the link between pay and performance. In 2005, NIST made the first significant changes to the APMS since its inception. NIST replaced its 100-point rating scale with six performance ratings and provided for automatic bonuses for high performing pay-capped employees. NIST also adjusted its provisions on retention service credit for reduction in force and annual adjustments to basic pay to correspond with the 2005 changes.

This amendment modifies the May 2005 amendment. Specifically, NIST will introduce a seventh level to its six level performance ratings system, broadening flexibility to make performance distinctions. Pay increases will continue to be based upon an annually determined percentage of the mid-point salary for each pay band in the career path and linked directly to

the top four performance ratings. This amendment will allow the percentage of the mid-point salary to vary not only by career path but also by pay bands within a career path, which will expand NIST's ability to reward new, early-career and mid-level employees. This amendment will also modify the provisions on retention service credit for reduction in force to correspond with these changes.

NIST will continually monitor the effectiveness of this amendment.

II. Basis for APMS Plan Modification

The need to modify the current Pay for Performance System (PPS), which was first implemented in fiscal year 2006, surfaced in the results of the 2007 NIST Employee Surveys, the NIST Research Advisory Committee 2007 Report to the NIST Director, the 2007 OPM Pay-for-Performance Report to NIST, and in discussions of the NIST Leadership Board. Generally, feedback indicated a need to clarify the system and address consequences of the May 2005 changes. One concern raised was that the system disproportionately rewarded employees in higher pay bands to the detriment of new and early-career employees. Another concern was that there was not enough flexibility to make meaningful performance distinctions. A work group of internal NIST stakeholders was tasked with evaluating the feedback and developing responsive modifications. The resulting adjustments are incorporated into this amendment.

The NIST APMS proposed modifications include adding a seventh level to the current six level system, to permit an additional performance distinction. From highest to lowest, the seven performance ratings are: Exceptional Contributor, Superior Contributor, Meritorious Contributor, Significant Contributor, Contributor, Marginal Contributor, and Unsatisfactory.

Performance ratings are determined based on the cumulative ratings and relative weights of the critical elements. Critical elements are rated using benchmark standards and supplemental standards/success measures. The ratings for the critical elements are: exceeds expectations (E), fully successful (S), minimally meets expectations (M), or unsatisfactory (U).

Performance pay increases will continue to be based on the annually determined percentage of the mid-point salary for each pay band in the career path. When the percentage is applied to the mid-point salary in each pay band, the resulting dollar amount is the unit of salary increase or ''I'' for that pay band and career path. ''I'' percentages may differ by pay band and career path. The ''I'' percentage used for any given career path and band will apply system-wide, except that the Director may authorize a particular operating unit to use a lower ''I'' percentage for reasons related to solvency.

Actual salary increases based on multiples of ''I'' are granted to employees in the top four performance levels as follows: Exceptional Contributor: ''I'' × 5; Superior Contributor: ''I'' × 3; Meritorious Contributor: ''I'' × 2; and Significant Contributor: ''I.'' A salary-capped employee with an Exceptional Contributor or Superior Contributor rating must receive a bonus at least equivalent to the salary increase that would have been received if the employee's salary were not capped.

In addition to receiving a performance pay increase, employees with Exceptional Contributor, Superior Contributor, Meritorious Contributor, and Significant Contributor ratings receive the full annual basic pay adjustment (general and locality pay increases) and are eligible for a discretionary bonus. Employees with a Contributor rating do not receive a performance pay increase but do receive the full annual basic pay adjustment and are eligible for a discretionary bonus. Employees rated Marginal Contributor or Unsatisfactory do not receive a performance pay increase, discretionary bonus, or annual basic pay adjustment.

The current provision on additional service credit for reduction-in-force purposes is revised to correspond with these changes. For retention purposes, this modification grants ten additional years of service for a rating of Exceptional Contributor, eight additional years of service for a rating of Superior Contributor, four additional years of service for a rating of Meritorious Contributor, three additional years of service for a rating of Significant Contributor, and one additional year of service for a rating of Contributor.

III. Changes in the APMS Plan

The APMS at the NIST, published in the **Federal Register** October 21, 1997 (62 FR 54604) and May 6, 2005 (70 FR 23996), is amended as follows:

1. Link Between Performance and Retention: The subsection titled ''Link Between Performance and Retention'' (70 FR 23998) is replaced with the following:

Link Between Performance and Retention

An employee with a performance rating of Exceptional Contributor is credited with ten additional years of service for retention purposes. An employee with a performance rating of Superior Contributor is credited with eight additional years of service for retention purposes. An employee with a performance rating of Meritorious Contributor is credited with four additional years of service for retention purposes. An employee with a performance rating of Significant Contributor is credited with three additional years of service for retention purposes. An employee with a performance rating of Contributor is credited with one additional year of service for retention purposes. The total credit is based on the employee's three most recent annual performance ratings of record received during the four-year period prior to an established cutoff date, for a potential total credit of thirty years. No reduction-in-force credit converts to this system from any other performance appraisal system.

2. Performance Ratings: The subsection titled ''Performance Ratings'' (70 FR 23998) is replaced with the following:

Performance Ratings

The NIST APMS performance ratings are Exceptional Contributor, Superior Contributor, Meritorious Contributor, Significant Contributor, Contributor, Marginal Contributor, and Unsatisfactory. Performance ratings are determined based on the cumulative ratings and weights of the critical elements in the performance plan. Performance in each critical element is evaluated using the benchmark standards and any supplemental standards or success measures, and the element is assigned a rating of exceeds expectations (E), fully successful (S), minimally meets expectations (M), or unsatisfactory (U).

The rating of the element is then matched with the weighted value of that critical element to produce a value for the element. For example, if an element is weighted 4 and the element is assigned a rating of exceeds expectations (E), then that element has a value of 4E.

Once this matching is completed and the elements are totaled, performance ratings are assigned using the following table.

Performance rating	Critical element ratings
Exceptional Contributor.	At least 8E; None below S.
Superior Contributor ..	At least 6E; None below S.
Meritorious Contributor.	At least 4E; None below S.
Significant Contributor	At least 3E; Up to 2M.
Contributor	Up to 3M.
Marginal Contributor	4 or more M.
Unsatisfactory	1 or more U.

An employee with unsatisfactory performance in one or more critical elements is considered unsatisfactory overall and is given a performance improvement plan and an opportunity to improve. If the employee's performance remains unsatisfactory at the end of an opportunity to improve, the supervisor initiates appropriate follow-up action, i.e., reassignment, proposed change to a lower pay band, or proposed removal.

3. Performance Pay Decisions: The subsection titled ''Performance Pay Decisions'' (62 FR 54612) is replaced with the following:

Performance Pay Decisions

Annually, the NIST Director determines the amount of a unit of increase, or ''I,'' based on a percentage of the mid-point salary for each pay band of each career path. The percentage may vary by career path and by pay bands within a career path. Performance pay increases are linked directly to performance ratings. An employee with an overall performance rating of Exceptional Contributor receives a performance pay increase equal to five units of increase, or 5 × ''I.'' A Superior Contributor receives a performance pay increase equal to 3 × ''I.'' A Meritorious Contributor receives a performance pay increase equal to 2 × ''I.'' A Significant Contributor receives a performance pay increase equal to ''I.'' The actual dollar amount of a performance pay increase depends upon an employee's career path and pay band. Employees may not receive an increase that causes their salary to exceed the maximum rate for their pay band.

Employees with Contributor, Marginal Contributor, and Unsatisfactory ratings do not receive performance pay increases.

[FR Doc. E8–16066 Filed 7–14–08; 8:45 am]

BILLING CODE 3510–13–P

DEPARTMENT OF COMMERCE

National Institute of Standards and Technology

Request for Nominations for Members To Serve on National Institute of Standards and Technology Federal Advisory Committees

AGENCY: National Institute of Standards and Technology, Department of Commerce.

ACTION: Notice.

SUMMARY: The National Institute of Standards and Technology (NIST) invites and requests nomination of individuals for appointment to its eight existing Federal Advisory Committees: Technology Innovation Program Advisory Committee, Board of Overseers of the Malcolm Baldrige National Quality Award, Judges Panel of the Malcolm Baldrige National Quality Award, Information Security and Privacy Advisory Board, Manufacturing Extension Partnership Advisory Board, National Construction Safety Team Advisory Committee, Advisory Committee on Earthquake Hazards Reduction, and Visiting Committee on Advanced Technology. NIST will consider nominations received in response to this notice for appointment to the Committees, in addition to nominations already received.

DATES: Nominations for all committees will be accepted on an ongoing basis and will be considered as and when vacancies arise.

ADDRESSES: See below.

SUPPLEMENTARY INFORMATION:

Technology Innovation Program (TIP) Advisory Board

Addresses: Please submit nominations to Mr. Marc Stanley, National Institute of Standards and Technology, 100 Bureau Drive, Mail Stop 4700, Gaithersburg, MD 20899–4700. Nominations may also be submitted via FAX to 301–869–1150. Additional information regarding the committee, including its charter may be found on its electronic home page at: *http://www.nist.gov/tip.*

FOR FURTHER INFORMATION CONTACT: Mr. Marc Stanley, National Institute of Standards and Technology, 100 Bureau Drive, Mail Stop 4700, Gaithersburg, MD 20899–4700; telephone 301–975–2162, fax 301–869–1150; or via e-mail at *marc.stanley@nist.gov.*

Committee Information: The Board will consist of ten members appointed by the Director of NIST, at least seven of whom shall be from United States industry, chosen to reflect the wide diversity of technical disciplines and industrial sectors represented in TIP projects. No member will be an employee of the Federal Government.

The Board will function solely as an advisory body, in compliance with the provisions of the Federal Advisory Committee Act.

Authority: 15 U.S.C 278n(k), as amended by the America COMPETES Act (Pub. L. 110–69), Federal Advisory Committee Act: 5 U.S.C. App. 2.

Board of Overseers of the Malcolm Baldrige National Quality Award

ADDRESSES: Please submit nominations to Harry Hertz, Director, Baldrige National Quality Program, NIST, 100 Bureau Drive, Mail Stop 1020, Gaithersburg, MD 20899–1020. Nominations may also be submitted via FAX to 301–975–4967. Additional information regarding the Committee, including its charter, current membership list, and executive summary may be found on its electronic home page at: *http://www.baldrige.nist.gov.*

FOR FURTHER INFORMATION CONTACT: Harry Hertz, Director, Baldrige National Quality Program and Designated Federal Officer, NIST, 100 Bureau Drive, Mail Stop 1020, Gaithersburg, MD 20899–1020; telephone 301–975–2361; FAX 301–948–4967; or via e-mail at *harry.hertz@nist.gov.*

Committee Information: The Board was established in accordance with 15 U.S.C. 3711a(d)(2)(B), pursuant to the Federal Advisory Committee Act (5 U.S.C. App. 2).

Objectives and Duties

1. The Board shall review the work of the private sector contractor(s), which assists the Director of the National Institute of Standards and Technology (NIST) in administering the Award. The Board will make such suggestions for the improvement of the Award process as it deems necessary.

2. The Board shall provide a written annual report on the results of Award activities to the Director of NIST, along with its recommendations for the improvement of the Award process.

3. The Board will function solely as an advisory committee under the Federal Advisory Committee Act.

4. The Board will report to the Director of NIST.

Membership

1. The Board will consist of approximately eleven members selected on a clear, standardized basis, in accordance with applicable Department of Commerce guidance, and for their

preeminence in the field of organizational performance management. There will be a balanced representation from U.S. service, manufacturing, education, health care industries, and the nonprofit sector.

2. The Board will be appointed by the Secretary of Commerce and will serve at the discretion of the Secretary. The term of office of each Board member shall be three years. All terms will commence on March 1 and end of February 28 of the appropriate year.

Miscellaneous

1. Members of the Board shall serve without compensation, but may, upon request, be reimbursed travel expenses, including per diem, as authorized by 5 U.S.C. 5701 et seq.

2. The Board will meet twice annually, except that additional meetings may be called as deemed necessary by the NIST Director or by the Chairperson. Meetings are usually one day in duration.

3. Board meetings are open to the public. Board members do not have access to classified or proprietary information in connection with their Board duties.

Nomination Information

1. Nominations are sought from the private and public sector as described above.

2. Nominees should have established records of distinguished service and shall be familiar with the quality improvement operations of manufacturing companies, service companies, small businesses, education, health care, and nonprofits. The category (field of eminence) for which the candidate is qualified should be specified in the nomination letter. Nominations for a particular category should come from organizations or individuals within that category. A summary of the candidate's qualifications should be included with the nomination, including (where applicable) current or former service on Federal advisory boards and Federal employment. In addition, each nomination letter should state that the person agrees to the nomination, acknowledges the responsibilities of serving on the Board, and will actively participate in good faith in the tasks of the Board. Besides participation at meetings, it is desired that members be able to devote the equivalent of seven days between meetings to either developing or researching topics of potential interest, and so forth, in furtherance of their Board duties.

3. The Department of Commerce is committed to equal opportunity in the workplace and seeks a broad-based and diverse Board membership.

Judges Panel of the Malcolm Baldrige National Quality Award

ADDRESSES: Please submit nominations to Harry Hertz, Director, Baldrige National Quality Program, NIST, 100 Bureau Drive, Mail Stop 1020, Gaithersburg, MD 20899–1020. Nominations may also be submitted via FAX to 301–975–4967. Additional information regarding the Committee, including its charter, current membership list, and executive summary may be found on its electronic home page at: *http://www.baldrige.nist.gov.*

FOR FURTHER INFORMATION CONTACT: Harry Hertz, Director, Baldrige National Quality Program and Designated Federal Official, NIST, 100 Bureau Drive, Mail Stop 1020, Gaithersburg, MD 20899–1020; telephone 301–975–2361; FAX 301–975–4967; or via e-mail at *harry.hertz@nist.gov.*

Committee Information: The Judges Panel was established in accordance with 15 U.S.C. 3711a(d)(1) and the Federal Advisory Committee Act (5 U.S.C. App. 2).

Objectives and Duties

1. The Judges Panel will ensure the integrity of the Malcolm Baldrige National Quality Award selection process by reviewing the results of examiners' scoring of written applications, and then voting on which applicants merit site visits by examiners to verify the accuracy of claims made by applicants.

2. The Judges Panel will ensure that individuals on site visit teams for the Award finalists have no conflict of interest with respect to the finalists. The Panel will also review recommendations from site visits and recommend Award recipients.

3. The Judges Panel will function solely as an advisory body, and will comply with the provisions of the Federal Advisory Committee Act.

4. The Panel will report to the Director of NIST.

Membership

1. The Judges Panel is composed of at least nine, and not more than twelve, members selected on a clear, standardized basis, in accordance with applicable Department of Commerce guidance. There will be a balanced representation from U.S. service and manufacturing industries, education, health care, and nonprofits and will include members familiar with performance improvement in their area of business.

2. The Judges Panel will be appointed by the Secretary of Commerce and will serve at the discretion of the Secretary. The term of office of each Panel member shall be three years. All terms will commence on March 1 and end on February 28 of the appropriate year.

Miscellaneous

1. Members of the Judges Panel shall serve without compensation, but may, upon request, be reimbursed travel expenses, including per diem, as authorized by 5 U.S.C. 5701 et seq.

2. The Judges Panel will meet three times per year. Additional meetings may be called as deemed necessary by the NIST Director or by the Chairperson. Meetings are usually one to four days in duration. In addition, each Judge must attend an annual three-day Examiner training course.

3. Committee meetings are closed to the public pursuant to Section 10(d) of the Federal Advisory Committee Act, 5 U.S.C. App. 2, as amended by Section 5(c) of the Government in the Sunshine Act, Public Law 94–409, and in accordance with Section 552b(c)(4) of Title 5, United States Code. Since the members of the Judges Panel examine records and discuss Award applicant data, the meetings are likely to disclose trade secrets and commercial or financial information obtained from a person that may be privileged or confidential.

Nomination Information

1. Nominations are sought from all U.S. service and manufacturing industries, education, health care, and nonprofits as described above.

2. Nominees should have established records of distinguished service and shall be familiar with the performance improvement operations of manufacturing companies, service companies, small businesses, education, health care, and nonprofit organizations. The category (field of eminence) for which the candidate is qualified should be specified in the nomination letter. Nominations for a particular category should come from organizations or individuals within that category. A summary of the candidate's qualifications should be included with the nomination, including (where applicable) current or former service on federal advisory boards and federal employment. In addition, each nomination letter should state that the person agrees to the nomination, acknowledge the responsibilities of serving on the Judges Panel, and will actively participate in good faith in the tasks of the Judges Panel. Besides participation at meetings, it is desired

that members be either developing or researching topics of potential interest, reading Baldrige applications, and so forth, in furtherance of their Committee duties.

3. The Department of Commerce is committed to equal opportunity in the workplace and seeks a broad-based and diverse Judges Panel membership.

Information Security and Privacy Advisory Board (ISPAB)

ADDRESSES: Please submit nominations to Pauline Bowen, NIST, 100 Bureau Drive, Mail Stop 8930, Gaithersburg, MD 20899–8930. Nominations may also be submitted via fax to 301–975–4007, Attn: ISPAB Nominations. Additional information regarding the Board, including its charter and current membership list, may be found on its electronic home page at: *http://csrc.nist.gov/ispab/.*

FOR FURTHER INFORMATION CONTACT: Pauline Bowen, ISPAB Designated Federal Official, NIST, 100 Bureau Drive, Mail Stop 8930, Gaithersburg, MD 20899–8930; telephone 301–975–2938; fax 301–975–8670; or via e-mail at *pauline.bowen@nist.gov.*

Committee Information: The ISPAB was originally chartered as the Computer System Security and Privacy Advisory Board (CSSPAB) by the Department of Commerce pursuant to the Computer Security Act of 1987 (Pub. L. 100–235). As a result of the E-Government Act of 2002 (Pub. L. 107–347), Title III, the Federal Information Security Management Act of 2002, Section 21 of the National Institute of Standards and Technology Act (15 U.S.C. 278g–4) the Board's charter was amended. This amendment included the name change of the Board.

Objectives and Duties

The objectives and duties of the ISPAB are:

1. To identify emerging managerial, technical, administrative, and physical safeguard issues relative to information security and privacy.

2. To advise the NIST, the Secretary of Commerce and the Director of the Office of Management and Budget on information security and privacy issues pertaining to Federal Government information systems, including thorough review of proposed standards and guidelines developed by NIST.

3. To annually report its findings to the Secretary of Commerce, the Director of the Office of Management and Budget, the Director of the National Security Agency, and the appropriate committees of the Congress.

4. To function solely as an advisory body, in accordance with the provisions of the Federal Advisory Committee Act.

Membership

The ISPAB is comprised of twelve members, in addition to the Chairperson. The membership of the Board includes:

1. Four members from outside the Federal Government eminent in the information technology industry, at least one of whom is representative of small or medium sized companies in such industries.

2. Four members from outside the Federal Government who are eminent in the field of information technology, or related disciplines, but who are not employed by or representative of a producer of information technology equipment; and

3. Four members from the Federal Government who have information system management experience, including experience in information security and privacy; at least one of these members shall be from the National Security Agency.

Miscellaneous

Members of the ISPAB who are not full-time employees of the Federal government are not paid for their service, but will, upon request, be allowed travel expenses in accordance with subchapter I of chapter 57 of title 5, United States Code, while otherwise performing duties at the request of the Board Chairperson, while away from their homes or a regular place of business.

Meetings of the Board are usually two to three days in duration and are usually held quarterly. The meetings primarily take place in the Washington, DC, metropolitan area but may be held at such locations and at such time and place as determined by the majority of the Board.

Board meetings are open to the public and members of the press usually attend. Members do not have access to classified or proprietary information in connection with their Board duties.

Nomination Information

Nominations are being accepted in all three categories described above.

Nominees should have specific experience related to information security or electronic privacy issues, particularly as they pertain to Federal information technology. Letters of nomination should include the category of membership for which the candidate is applying and a summary of the candidate's qualifications for that specific category. Also include (where applicable) current or former service on Federal advisory boards and any Federal employment. Each nomination letter should state that the person agrees to the nomination, acknowledges the responsibilities of serving on the ISPAB, and that they will actively participate in good faith in the tasks of the ISPAB.

Besides participation at meetings, it is desired that members be able to devote a minimum of two days between meetings to developing draft issue papers, researching topics of potential interest, and so forth in furtherance of their Board duties.

Selection of ISPAB members will not be limited to individuals who are nominated. Nominations that are received and meet the requirements will be kept on file to be reviewed as Board vacancies occur.

Nominees must be U.S. citizens.

The Department of Commerce is committed to equal opportunity in the workplace and seeks a broad-based and diverse ISPAB membership.

Manufacturing Extension Partnership (MEP) Advisory Board

ADDRESSES: Please submit nominations to Ms. Karen Lellock, National Institute of Standards and Technology, 100 Bureau Drive, Mail Stop 4800, Gaithersburg, MD 20899–4800. Nominations may also be submitted via fax to 301–963–6556. Additional information regarding the Board, including its charter may be found on its electronic home page at: *http://www.mep.nist.gov/about-mep/mep-advisory-board.htm.*

FOR FURTHER INFORMATION CONTACT: Ms. Karen Lellock, National Institute of Standards and Technology, 100 Bureau Drive, Mail Stop 4800, Gaithersburg, MD 20899–4800; telephone 301–975–4269, fax 301–963–6556; or via e-mail at *karen.lellock@nist.gov.*

Committee Information: The Board will advise the Director of the National Institute of Standards and Technology (NIST) on MEP programs, plans, and policies, assess the soundness of MEP plans and strategies, and assess current performance against MEP program plans.

The Board will consist of ten individuals appointed by the Director of the National Institute of Standards and Technology (NIST) and broadly representing stakeholders.

The Board will function solely as an advisory body, in compliance with the provisions of the Federal Advisory Committee Act.

Authority: 15 U.S.C. 278k(e) and the Federal Advisory Committee Act: 5 U.S.C. App. 2.

National Construction Safety Team Advisory Committee

ADDRESSES: Please submit nominations to Stephen Cauffman, National Construction Safety Team Advisory Committee, National Institute of Standards and Technology, 100 Bureau Drive, Mail Stop 8611, Gaithersburg, MD 20899–8611. Nominations may also be submitted via fax to 301–869–6275.

FOR FURTHER INFORMATION CONTACT: Stephen Cauffman, National Construction Safety Team Advisory Committee, National Institute of Standards and Technology, 100 Bureau Drive, Mail Stop 8611, Gaithersburg, MD 20899–8611, telephone 301–975–6051, fax 301–869–6275; or via e-mail at *stephen.cauffman@nist.gov*.

Committee Information: The Committee was established in accordance with the National Construction Safety Team Act, Public Law 107–231 and the Federal Advisory Committee Act (5 U.S.C. App. 2).

Objectives and Duties

1. The Committee shall advise the Director of the National Institute of Standards and Technology (NIST) on carrying out the National Construction Safety Team Act (Act), review and provide advice on the procedures developed under section 2(c)(1) of the Act, and review and provide advice on the reports issued under section 8 of the Act.

2. The Committee functions solely as an advisory body, in accordance with the provisions of the Federal Advisory Committee Act.

3. The Committee shall report to the Director of NIST.

4. The Committee shall provide a written annual report, through the Director of the NIST Building and Fire Research Laboratory (BFRL) and the Director of NIST, to the Secretary of Commerce for submission to the Congress, to be due at a date to be agreed upon by the Committee and the Director of NIST. Such report will provide an evaluation of National Construction Safety Team activities, along with recommendations to improve the operation and effectiveness of National Construction Safety Teams, and an assessment of the implementation of the recommendations of the National Construction Safety Teams and of the Committee. In addition, the Committee may provide reports at strategic stages of an investigation, at its discretion or at the request of the Director of NIST, through the Director of the BFRL and the Director of NIST, to the Secretary of Commerce.

Membership

1. The Committee will be composed of not fewer than five nor more than ten members that reflect a wide balance of the diversity of technical disciplines and competencies involved in the National Construction Safety Teams investigations. Members shall be selected on the basis of established records of distinguished service in their professional community and their knowledge of issues affecting the National Construction Safety Teams.

2. The Director of the NIST shall appoint the members of the Committee, and they will be selected on a clear, standardized basis, in accordance with applicable Department of Commerce guidance.

Miscellaneous

1. Members of the Committee will not be paid for their services, but will, upon request, be allowed travel and per diem expenses in accordance with 5 U.S.C. 5701 et seq., while attending meetings of the Committee or of its subcommittees, or while otherwise performing duties at the request of the chairperson, while away from their homes or a regular place of business.

2. The Committee will meet at least once per year at the call of the Chair. Additional meetings may be called whenever one-third or more of the members so request it in writing or whenever the Chair or the Director of NIST requests a meeting.

Nomination Information

1. Nominations are sought from all fields involved in issues affecting National Construction Safety Teams.

2. Nominees should have established records of distinguished service. The field of expertise that the candidate represents he/she is qualified for should be specified in the nomination letter. Nominations for a particular field should come from organizations or individuals within that field. A summary of the candidate's qualifications should be included with the nomination, including (where applicable) current or former service on Federal advisory boards and Federal employment. In addition, each nomination letter should state that the candidate agrees to the nomination, acknowledges the responsibilities of serving on the Committee, and will actively participate in good faith in the tasks of the Committee.

3. The Department of Commerce is committed to equal opportunity in the workplace and seeks a broad-based and diverse Committee membership.

Advisory Committee on Earthquake Hazards Reduction (ACEHR)

ADDRESSES: Please submit nominations to Tina Faecke, Administrative Officer, National Earthquake Hazards Reduction Program, National Institute of Standards and Technology, 100 Bureau Drive, Mail Stop 8630, Gaithersburg, MD 20899–8630. Nominations may also be submitted via fax to 301–975–5433 or e-mail at *tina.faecke@nist.gov*. Additional information regarding the Committee, including its charter and executive summary may be found on its electronic home page at: *http://www.nehrp.gov*.

FOR FURTHER INFORMATION CONTACT: Dr. Jack Hayes, Director, National Earthquake Hazards Reduction Program, National Institute of Standards and Technology, 100 Bureau Drive, Mail Stop 8610, Gaithersburg, MD 20899–8610, telephone 301–975–5640, fax 301–975–4032; or via e-mail at *jack.hayes@nist.gov*.

Committee Information: The Committee was established on June 27, 2006, in accordance with the National Earthquake Hazards Reduction Program Reauthorization Act, Pub. L. 108–360 and the Federal Advisory Committee Act (5 U.S.C. App. 2).

Objectives and Duties

1. The Committee will assess trends and developments in the science and engineering of earthquake hazards reduction, effectiveness of the Program in carrying out the activities under section 103(a)(2) of the Act, the need to revise the Program, the management, coordination, implementation, and activities of the Program.

2. The Committee functions solely as an advisory body, in accordance with the provisions of the Federal Advisory Committee Act.

3. The Committee shall report to the Director of NIST.

4. Not later than one year after the first meeting of the Committee, and at least once every two years thereafter, the Committee shall report to the Director of NIST, on its findings of the assessments and its recommendations for ways to improve the Program. In developing recommendations, the Committee shall consider the recommendations of the United States Geological Survey Scientific Earthquake Studies Advisory Committee.

Membership

1. The Committee will consist of not fewer than 11 nor more than 15 members, who reflect a wide diversity of technical disciplines, competencies, and communities involved in earthquake hazards reduction. Members

shall be selected on the basis of established records of distinguished service in their professional community and their knowledge of issues affecting the National Earthquake Hazards Reduction Program.

2. The Director of NIST shall appoint the members of the Committee, and they will be selected on a clear, standardized basis, in accordance with applicable Department of Commerce guidance.

3. The term of office of each member of the Committee shall be three years, except that vacancy appointments shall be for the remainder of the unexpired term of the vacancy and that the initial members shall have staggered terms such that the committee will have approximately ⅓ new or reappointed members each year.

4. No committee member may be an ''employee'' as defined in subparagraphs (A) through (F) of section 7342(a)(1) of Title 5 of the United States Code.

Miscellaneous

1. Members of the Committee will not be compensated for their services, but will, upon request, be allowed travel and per diem expenses in accordance with 5 U.S.C. 5701 *et seq.*, while attending meetings of the Committee or of its subcommittees, or while otherwise performing duties at the request of the chairperson, while away from their homes or a regular place of business.

2. Members of the Committee shall serve as Special Government Employees and are required to file an annual Executive Branch Confidential Financial Disclosure Report.

3. The Committee shall meet at least once per year. Additional meetings may be called whenever the Director of NIST requests a meeting.

4. Committee meetings are open to the public.

Nomination Information

1. Nominations are sought from industry and other communities having an interest in the National Earthquake Hazards Reduction Program, such as, but not limited to, research and academic institutions, industry standards development organizations, state and local government bodies, and financial communities, who are qualified to provide advice on earthquake hazards reduction and represent all related scientific, architectural, and engineering disciplines.

2. Nominees should have established records of distinguished service. The field of expertise that the candidate represents should be specified in the nomination letter. Nominations for a particular field should come from organizations or individuals within that field. A summary of the candidate's qualifications should be included with the nomination, including (where applicable) current or former service on federal advisory boards and federal employment. In addition, each nomination letter should state that the person agrees to the nomination, acknowledges the responsibilities of serving on the Committee, and will actively participate in good faith in the tasks of the Committee.

3. The Department of Commerce is committed to equal opportunity in the workplace and seeks a broad-based and diverse Committee membership.

Visiting Committee on Advanced Technology (VCAT)

ADDRESSES: Please submit nominations to Gail Ehrlich, Visiting Committee on Advanced Technology, National Institute of Standards and Technology, 100 Bureau Drive, Mail Stop 1060, Gaithersburg, MD 20899–1060. Nominations may also be submitted via fax to 301–216–0529. Additional information regarding the Committee, including its charter, current membership list, and executive summary may be found on the NIST Web site at: *http://www.nist.gov/director/vcat/vcat.htm*.

FOR FURTHER INFORMATION CONTACT: Gail Ehrlich, Visiting Committee on Advanced Technology, National Institute of Standards and Technology, 100 Bureau Drive, Mail Stop 1060, Gaithersburg, MD 20899–1060, telephone 301–975–2149, fax 301–216–0529; or via e-mail at *gail.ehrlich@nist.gov*.

Committee Information: The VCAT was established in accordance with 15 U.S.C. 278 and the Federal Advisory Committee Act (5 U.S.C. App. 2).

Objectives and Duties

1. The Committee shall review and make recommendations regarding general policy for NIST, its organization, its budget, and its programs, within the framework of applicable national policies as set forth by the President and the Congress.

2. The Committee functions solely as an advisory body, in accordance with the provisions of the Federal Advisory Committee Act.

3. The Committee shall report to the Director of NIST.

4. The Committee shall provide a written annual report, through the Director of NIST, to the Secretary of Commerce for submission to the Congress no later than 30 days after the submittal to Congress of the President's annual budget request in each year. Such report shall deal essentially, though not necessarily exclusively, with policy issues or matters which affect the Institute, or with which the Committee in its official role as the private sector policy advisor of the Institute is concerned. Each such report shall identify areas of program emphasis for the Institute of potential importance to the long-term competitiveness of the United States industry, which could be used to assist the United States enterprises and United States industrial joint research and development ventures. Such report also shall comment on the programmatic planning document and updates thereto submitted to Congress under subsections (c) and (d) of section 23 of the NIST Act (15 U.S.C. 278i). The Committee shall submit to the Secretary and Congress such additional reports on specific policy matters as it deems appropriate.

Membership

1. The Committee is composed of fifteen members that provide representation of a cross-section of traditional and emerging United States industries. Members shall be selected solely on the basis of established records of distinguished service and shall be eminent in such fields as business, research, new product development, engineering, labor, education, management consulting, environment, and international relations. No employee of the Federal Government shall serve as a member of the Committee.

2. The Director of the National Institute of Standards and Technology shall appoint the members of the Committee, and they will be selected on a clear, standardized basis, in accordance with applicable Department of Commerce guidance.

Miscellaneous

1. Members of the VCAT are not paid for their service, but will, upon request, be allowed travel expenses in accordance with 5 U.S.C. 5701 *et seq.*, while attending meetings of the Committee or of its subcommittees, or while otherwise performing duties at the request of the chairperson, while away from their homes or a regular place of business.

2. Meetings of the VCAT take place at the NIST headquarters in Gaithersburg, Maryland, and once each year at the NIST site in Boulder, Colorado. Meetings are one or two days in duration and are held at least twice each year.

3. Committee meetings are open to the public.

Nomination Information

1. Nominations are sought from all fields described above.

2. Nominees should have established records of distinguished service and shall be eminent in fields such as business, research, new product development, engineering, labor, education, management consulting, environment and international relations. The category (field of eminence) for which the candidate is qualified should be specified in the nomination letter. Nominations for a particular category should come from organizations or individuals within that category. A summary of the candidate's qualifications should be included with the nomination, including (where applicable) current or former service on federal advisory boards and federal employment. In addition, each nomination letter should state that the candidate agrees to the nomination, acknowledges the responsibilities of serving on the VCAT, and will actively participate in good faith in the tasks of the VCAT. Besides participation in one- or two-day meetings held at least twice each year, it is desired that members be able to devote the equivalent of two days between meetings to either developing or researching topics of potential interest, and so forth in furtherance of the Committee duties.

3. The Department of Commerce is committed to equal opportunity in the workplace and seeks a broad-based and diverse VCAT membership.

Dated: July 8, 2008.

James M. Turner,

Deputy Director.

[FR Doc. E8–16064 Filed 7–14–08; 8:45 am]

BILLING CODE 3510–13–P

DEPARTMENT OF COMMERCE

National Institute of Standards and Technology

[Docket No.: 080626784–8786–01]

RIN 0693–ZA82

Technology Innovation Program (TIP) Notice of Availability of Funds and Announcement of Public Meetings (Proposers' Conferences)

AGENCY: National Institute of Standards and Technology (NIST), Department of Commerce.

ACTION: Notice.

SUMMARY: The National Institute of Standards and Technology's (NIST) Technology Innovation Program (TIP) announces that it will hold a single fiscal year 2008 competition and is soliciting high-risk, high-reward research and development proposals for financial assistance. TIP also announces that it will hold public meetings (Proposers' Conferences) for all interested parties. TIP is soliciting proposals under this fiscal year 2008 competition in one area of critical national need entitled ''Civil Infrastructure'' as described in the Program Description section below.

DATES: The due date for submission of proposals is 3 p.m. Eastern Time, Thursday, September 4, 2008. This deadline applies to any mode of proposal submission, including hand-delivery, courier, express mailing, and electronic. Do not wait until the last minute to submit a proposal. TIP will not make any allowances for late submissions, including incomplete Grants.gov registration or delays by guaranteed overnight couriers. To avoid any potential processing backlogs due to last minute registrations, proposers are strongly encouraged to start their Grants.gov registration process at least four weeks prior to the proposal submission due date. Review, selection, and award processing is expected to be completed by the end of November 2008.

ADDRESSES: Proposals must be submitted to TIP as follows:

Paper submission: Send to National Institute of Standards and Technology, Technology Innovation Program, 100 Bureau Drive, Stop 4701, Gaithersburg, MD 20899–4701.

Electronic submission: http://www.grants.gov.

FOR FURTHER INFORMATION CONTACT: Barbara Lambis at 301–975–4447 or by e-mail at *barbara.lambis@nist.gov.*

SUPPLEMENTARY INFORMATION:

Additional Information. The full Federal Funding Opportunity (FFO) announcement for this request for proposals is available at *http://www.grants.gov.* The full FFO announcement text can also be accessed on the TIP Web site at *http://www.nist.gov/tip/helpful.html.* The June 2008 Technology Innovation Program Proposal Preparation Kit is also available at *http://www.nist.gov/tip/helpful.html.* The TIP Proposal Preparation Kit must be used to prepare a TIP proposal. The TIP implementing regulations are published at 15 CFR Part 296, 73 FR 35,913 (June 25, 2008), and included in the TIP Proposal Preparation Kit as Appendix B.

Public Meetings (Proposers' Conferences). TIP is holding public meetings (Proposers' Conferences) at several locations around the country. Proposers' conferences will provide general information regarding TIP, guidance on preparing proposals, and the opportunity for questions and answers. Proprietary technical discussions about specific project ideas with NIST staff are not permitted at these conferences or at any time before submitting the proposal to TIP. Therefore, you should not expect to have proprietary issues addressed at proposers' conferences. Also, NIST/TIP staff will not critique or provide feedback on project ideas while they are being developed by a proposer. However, NIST/TIP staff will answer questions about the TIP eligibility and cost-sharing requirements, evaluation and award criteria, selection process, and the general characteristics of a competitive TIP proposal at the proposers' conferences and by phone and e-mail. Attendance at TIP proposers' conferences is not required.

TIP Proposers' Conferences are being held at the following dates, times, and locations:

July 16, 2008, 9 a.m.–1 p.m. Central Time: St. Louis Airport Marriott, 10700 Pear Tree Lane, St. Louis, MO (314–253–5121).

July 16, 2008, 9 a.m.–1 p.m. Central Time: Renaissance Houston, 6 Greenway Plaza, East Houston, TX (713–850–2310).

July 17, 2008, 9 a.m.–1 p.m. Eastern Time: Holiday Inn Atlanta Airport North, 1380 Virginia Avenue, Atlanta, GA (404–838–0029).

July 17, 2008, 9 a.m.–1 p.m. Pacific Time: Holiday Inn Portland Airport, 8439 North East Columbia Boulevard, Portland, OR (503–914–5253).

July 18, 2008, 9 a.m.–1 p.m. Pacific Time: Doubletree San Jose, 2050 Gateway Place, San Jose, CA (408–437–2124).

July 21, 2008, 1 p.m.–5 p.m. Eastern Time: Boston Courtyard Downtown, 275 Tremont Street, Boston, MA (781–537–5594).

July 22, 2008, 9 a.m.–1 p.m. Eastern Time: NIST Red Auditorium, 100 Bureau Drive, Gaithersburg, MD (301–975–8910). Pre-registration is required by 5 p.m. Eastern Time on July 16, 2008 for the Proposers' Conference being held at NIST Gaithersburg, MD only. Due to increased security at NIST, no on-site registrations will be accepted and all attendees must be pre-registered. Photo identification must be presented at the NIST main gate to be admitted to the July 17, 2008 conference. Attendees must wear their conference badge at all times while on the NIST campus. Same day registration will be allowed at the

other locations. Electronic Registration: At *http://www.nist.gov/public_affairs/confpage/080722.htm*.

No registration fee will be charged for any of the Proposers' Conferences. Presentation materials from Proposers' Conferences will be made available on the TIP Web site.

Statutory Authority. Section 3012 of the America Creating Opportunities to Meaningfully Promote Excellence in Technology, Education, and Science (COMPETES) Act, Pub. L. 110–69 (August 9, 2007), 15 U.S.C.A. 278n (2008).

CFDA. 11.613, Technology Innovation Program

Program Description. TIP is soliciting proposals under this fiscal year 2008 competition in one area of critical nation need entitled ''Civil Infrastructure'' as described below. The objective of this area of critical national need is to address two elements of a Civil Infrastructure Structural Integrity societal challenge. The two elements are inspection and monitoring of the United States' Civil Infrastructure Structural Integrity as outlined in the white paper ''Advanced Sensing Technologies for the Infrastructure: Roads, Highways, Bridges and Water Systems'' (*http://www.nist.gov/tip/helpful.html*).

The solutions to this societal challenge require advancement beyond the state-of-the-art of sensing technologies that will assess the structural integrity and/or deterioration processes of bridges, roads, water mains, and wastewater collection systems, that are more accurate, easier to use, and more economically feasible. The need for advanced sensing technologies is of national importance because nearly all municipalities and states in the nation face infrastructure management challenges. The need for TIP's investment is justified because portions of infrastructure are reaching the end of their life spans and there are few cost effective technical means to monitor infrastructure integrity and to prioritize the renovation and replacement of infrastructure elements. Transformational research beyond incremental advancements is required to achieve the objectives for this area of critical national need. Incremental improvements of current technologies will not meet the challenges of providing cost-effective, widely deployable solutions to the problems of sensing structural integrities and/or deterioration processes widely across infrastructure systems.

Proposals are being sought to create and validate new advanced, robust, network capable, nondestructive evaluation and test sensing systems, or system components, to cost effectively and quantitatively inspect and evaluate the structural integrity of the civil infrastructure.

The targeted system should be capable of, but not limited to, detection of corrosion, cracking, and delamination or failure of critical infrastructure elements and the materials of which they are made.

Solutions are needed for improved inspection systems for roads, highways, bridges, drinking and wastewater systems that provide real-time understanding of the integrity and service life through the use of portable, mobile or remote sensing capabilities.

Innovations are being sought in all aspects of a system to provide an advanced, cost effective, networked system, either fixed or mobile, that is easily deployable, self powered, and self monitoring. A complete system could include all system components, hardware, and software.

Proposals that include validation by potential end users will be considered as having strong potential.

Also within scope are:

a. Systems that provide new and advanced methodologies for the detection of fluid leaks from water piping systems; and

b. Single components of a system solution that include a demonstration of the component in a system setting.

Ineligible projects under this competition are:

a. Advancements in a system component without a prototype demonstrating that the component is functional within a system solution, as part of the proposed technical plan;

b. Integration projects using only existing state-of-the-art components;

c. Straightforward improvements to existing components without the potential for a transformational increase in performance to the technical requirements; and

d. Software development that is predominantly straightforward, routine data gathering using applications of standard software development practices.

In addition to the competition-specific ineligible projects, the following are ineligible projects:

a. Straightforward improvements of existing products or product development.

b. Projects that are Phase II, III, or IV clinical trials. TIP will rarely fund Phase I clinical trials and reserves the right not to fund a Phase I clinical trial. The portion of a Phase I trial that may be funded must be critical to meeting Evaluation Criterion (a)(1) addressing the scientific and technical merit of the proposal. The trial results must be essential for completion of a critical R&D task of the project. The definitions of all phases of clinical trials are provided in the *TIP Guidelines and Documentation Requirements for Research Involving Human & Animal Subjects* located at *http://www.nist.gov/tip/helpful.html.*

c. Pre-commercial-scale demonstration projects where the emphasis is on demonstrating that some technology works on a large scale or is economically sound rather than on R&D that advances the state of the art and is high-risk, high-reward.

d. Projects that TIP determines would likely be completed without TIP funds in the same time frame or nearly the same time frame, or with the same scale or scope.

e. Predominantly straightforward, routine data gathering (e.g., creation of voluntary consensus standards, data gathering/handbook preparation, testing of materials, or unbounded research aimed at basic discovery science) or application of standard engineering practices.

f. Projects in which the predominant risk is market oriented—that is, the risk that the end product may not be embraced by the marketplace.

g. Projects with software work, that are predominantly about final product details and product development, and that have significant testing involving users outside the research team to determine if the software meets the original research objectives, are likely to be either uncompetitive or possibly ineligible for funding. However, R&D projects with limited software testing, involving users outside of the research team, may be eligible for funding and contain eligible costs within a TIP award when the testing is critical to meeting Evaluation Criteria and/or Award Criteria and the testing results are essential for completion of a critical task in the proposed research. This type of testing in projects may also be considered to involve human subjects in research.

Funding Availability. Fiscal year 2008 appropriations include funds in the amount of approximately $9 million for new TIP awards. Approximately 9 awards are anticipated. The anticipated start date is January 1, 2009. The period of performance depends on the R&D activity proposed. A single company can receive up to a total of $3 million with a project period of performance of up to 3 years. A joint venture can receive up to a total of $9 million with a project period of performance of up to 5 years. Continuation funding is based on satisfactory performance, availability

of funds, continued relevance to program objectives, and is at the sole discretion of NIST.

Eligibility Criteria. Single companies and joint ventures may apply for TIP funding as provided in 15 CFR 296.2, 296.4, and 296.5.

Cost Sharing Requirements. At least 50 percent of the yearly total project costs (direct plus all of the indirect costs).

Evaluation and Award Criteria. Proposals are selected for funding based on the evaluation criteria listed in 15 CFR 296.21 and the award criteria listed in 15 CFR 296.22 as identified below. Additionally, no proposal will be funded unless TIP determines that it has scientific and technical merit and that the proposed research has strong potential for addressing a societal challenge within the TIP-identified area of critical national need as described in this notice. Detailed guidance on how to address the evaluation and award criteria is provided in Chapter 2 of the TIP Proposal Preparation Kit, which is available at *http://www.nist.gov/tip/helpful.html.*

Evaluation Criteria. The two components of the evaluation criteria and respective weights as listed in 15 CFR 296.21 are as follows:

(a)(1) The proposer(s) adequately addresses the scientific and technical merit and how the research may result in intellectual property vesting in a United States entity including evidence that:

(i) The proposed research is novel;

(ii) The proposed research is high-risk, high-reward;

(iii) The proposer(s) demonstrates a high level of relevant scientific/technical expertise for key personnel, including contractors and/or informal collaborators, and has access to the necessary resources, for example research facilities, equipment, materials, and data, to conduct the research as proposed;

(iv) The research result(s) has the potential to address the technical needs associated with a major societal challenge not currently being addressed; and

(v) The proposed research plan is scientifically sound with tasks, milestones, timeline, decision points and alternate strategies.

(2) Total weight of (a)(1)(i) through (v) is 50%.

(b)(1) The proposer(s) adequately establishes that the proposed research has strong potential for advancing the state-of-the-art and contributing significantly to the United States science and technology knowledge base and to address areas of critical national need through transforming the Nation's capacity to deal with a major societal challenge(s) that is not currently being addressed, and generate substantial benefits to the Nation that extend significantly beyond the direct return to the proposer including an explanation in the proposal:

(i) Of the potential magnitude of transformational results upon the Nation's capabilities in an area;

(ii) Of how and when the ensuing transformational results will be useful to the Nation; and

(iii) Of the capacity and commitment of each award participant to enable or advance the transformation to the proposed research results (technology).

(2) Total weight of (b)(1)(i) through (iii) is 50%.

Award Criteria. The six components of the award criteria as listed in 15 CFR § 296.22 are as follows:

(a) The proposal explains why TIP support is necessary, including evidence that the research will not be conducted within a reasonable time period in the absence of financial assistance from TIP;

(b) The proposal demonstrates that reasonable and thorough efforts have been made to secure funding from alternative funding sources and no other alternative funding sources are reasonably available to support the proposal;

(c) The proposal explains the novelty of the research (technology) and demonstrates that other entities have not already developed, commercialized, marketed, distributed, or sold similar research results (technologies);

(d) The proposal has scientific and technical merit and may result in intellectual property vesting in a United States entity that can commercialize the technology in a timely manner; and

(e) The proposal establishes that the research has strong potential for advancing the state-of-the-art and contributing significantly to the United States science and technology knowledge base; and

(f) The proposal establishes that the proposed transformational research (technology) has strong potential to address areas of critical national need through transforming the Nation's capacity to deal with major societal challenges that are not currently being addressed, and generate substantial benefits to the Nation that extend significantly beyond the direct return to the proposer.

NIST must determine that a proposal successfully meets all six award criteria for the proposal to receive funding under the Program.

Selection Factors. In making final selections, the Selecting Official will select funding recipients based upon the Evaluation Panel's rank order of the proposals and the following selection factors:

a. Assuring an appropriate distribution of funds among technologies and their applications,

b. Availability of funds, and/or

c. Program priorities.

Program Priorities. TIP is soliciting proposals under this fiscal year 2008 competition in one area of critical nation need entitled ''Civil Infrastructure'' as described in the Program Description section above.

Selection Procedures. Proposals are selected based on a multi-disciplinary peer-review process, as described in 15 CFR 296.20. A preliminary review is conducted to determine if the proposal is in accordance with 15 CFR 296.3, complies with the eligibility requirements described in 15 CFR 296.5, addresses award criteria (a) through (c) of 15 CFR 296.22, and is complete. Proposals that are incomplete or do not meet any one of the preliminary review requirements will normally be eliminated. All remaining proposals are then carefully reviewed based on the TIP evaluation criteria listed in 15 CFR 296.21 and award criteria listed in 15 CFR 296.22. An Evaluation Panel will present funding recommendations to a Selecting Official in rank order for further consideration. The Selecting Official makes the final selections for funding. The selection of proposals by the Selecting Official is final and cannot be appealed. The final approval of selected proposals and award of assistance will be made by the NIST Grants Officer. The award decision of the NIST Grants Officer is final and cannot be appealed.

NIST reserves the right to negotiate the cost and scope of the proposed work with the proposers that have been selected to receive awards. This may include requesting that the proposer delete from the scope of work a particular task that is deemed by NIST to be inappropriate for support. NIST also reserves the right to reject a proposal where information exists that raises a reasonable doubt as to the responsibility of the proposer.

Unallowable/Ineligible Costs. The following items, regardless of whether they are allowable under the federal cost principles, are ineligible/unallowable under TIP:

a. Bid and proposal costs unless they are incorporated into a federally approved indirect cost rate (e.g., payments to any organization or person retained to help prepare a proposal).

b. Construction costs for new buildings or extensive renovations of existing laboratory buildings. However, costs for the construction of experimental research and development facilities to be located within a new or existing building are allowable provided the equipment or facilities are essential for carrying out the proposed project and are approved by the NIST Grants Officer. These types of facility costs may need to be prorated if they will not be used exclusively for the research activities proposed.

c. Contractor office supplies and contractor expenses for conferences/workshops.

d. Contracts to another part of the same company or to another company with identical or nearly identical ownership. Work proposed by another part of the same company or by another company with identical or nearly identical ownership should be shown as funded through inter-organizational transfers that do not contain profit. Inter-organizational transfers should be broken down in the appropriate budget categories.

e. For research involving human and/or animal subjects, any costs used to secure Institutional Review Board or Institutional Animal Care and Use Committee approvals before or during the award.

f. General purpose office equipment and supplies that are not used exclusively for the research, e.g., office computers, printers, copiers, paper, pens, and toner cartridges.

g. Indirect costs, which must be absorbed by the recipient. However, indirect costs are allowable for contractors under a single company or joint venture. (Note that indirect costs absorbed by the recipient may be used to meet the cost-sharing requirement.)

h. Marketing, sales, or commercialization costs, including marketing surveys, commercialization studies, and general business planning, unless they are included in a federally approved indirect cost rate.

i. Office furniture costs, unless they are included in a federally approved indirect cost rate.

j. Patent costs and legal fees, unless they are included in a federally approved indirect cost rate.

k. Preaward costs.

l. Profit, management fees, interest on borrowed funds, or facilities capital cost of money. However, profit is allowable for contractors under a single company or joint venture.

m. Relocation costs, unless they are included in a federally approved indirect cost rate.

n. Tuition costs. However, an institution of higher education participating in a TIP project as a contractor or as a joint venture member or lead may charge TIP for tuition remission or other forms of compensation in lieu of wages paid to students working on TIP projects, but only as provided in OMB Circular A–21, Section J.41. In such cases, tuition remission would be considered a cash contribution rather than an in-kind contribution.

Intellectual Property Requirements. For single company award recipients, pursuant to the Bayh-Dole Act (35 U.S.C. 202 (a) and (b)) and ''Memorandum to the Heads of Executive Departments and Agencies: Government Patent Policy'' (February 18, 1983), the entity that invents owns the invention. However, pursuant to 35 U.S.C. 202(a)(i), when a single company or its contractor under a TIP award is not located in the United States or does not have a place of business located in the United States or is subject to the control of a foreign government, NIST will require that title to inventions made by such parties be transferred to a United States entity that will ensure the commercialization of the technology in a timely fashion.

For joint ventures, ownership of inventions arising from a TIP-funded project may vest in any participant in a joint venture, as agreed by the members of the joint venture (notwithstanding 35 U.S.C. 202 (a) and (b)). (*Participant includes any entity that is identified as a recipient, subrecipient, or contractor on an award to a joint venture.*)

Title to any such invention shall not be transferred or passed, except to a participant in the joint venture, until the expiration of the first patent obtained in connection with such invention. Should the last existing participant in a joint venture cease to exist prior to the expiration of the first patent obtained in connection with any invention developed from assistance provided under TIP, title to such patent must be transferred or passed to a U.S. entity that can commercialize the technology in a timely fashion.

The United States reserves a nonexclusive, nontransferable, irrevocable paid-up license, to practice or have practiced for or on behalf of the United States any inventions developed from a TIP award. The federal government shall not in the exercise of such license publicly disclose proprietary information related to the license. This does not prohibit the licensing to any company of intellectual property rights arising from a TIP-funded project. (15 CFR 296.11(b)(3)). The federal government also has march-in rights in accordance with 37 CFR 401.6.

Projects Involving Human Subjects. Research involving human subjects must be in compliance with applicable Federal regulations and NIST policies for the protection of human subjects. Human subjects research activities involve interactions with live human subjects or the use of data, images, tissue, and/or cells/cell lines (including those used for control purposes) from human subjects. Research involving human subjects may include activities such as the use of image and/or audio recording of people, taking surveys or using survey data, using databases containing personal information, testing software with volunteers, and many tasks beyond those within traditional biomedical research. A Human Subjects Determination Checklist is included in the June 2008 TIP Proposal Preparation Kit in Chapter 4 (*http://www.nist.gov/tip/helpful.html*) to assist you in determining whether your proposed research plan has human subjects involvement, which would require additional information in your proposal submission, and possibly more documentation during the Evaluation Panel's consideration of your proposal. See the *TIP Guidelines and Documentation Requirements for Research Involving Human & Animal Subjects* for more specific information on documentation requirements and due dates for documentation located at *http://www.nist.gov/tip/helpful.html* or by calling 1–888–847–6478.

Projects Involving Live Vertebrate Animals. Research involving live vertebrate animals must be in compliance with applicable federal regulations and NIST policies for the protection of live vertebrate animals. Vertebrate animal research involves live animals that are being cared for, euthanized, or used by the project participants to accomplish research goals or for teaching or testing. The regulations do not apply to animal tissues purchased from commercial processors or tissue banks or to uses of preexisting images of animals (e.g., a wildlife documentary or pictures of animals in newscasts). The regulations do apply to any animals that are transported, cared for, euthanized or used by a project participant for testing, research, or training such as testing of new procedures or projects, collection of biological samples or observation data on health and behavior. Detailed information regarding the use of live vertebrate animals in research plans and required documentation is available in the *TIP Guidelines and Documentation*

Requirements for Research Involving Human & Animal Subjects located at *http://www.nist.gov/tip/helpful.html* or by calling 1–888–847–6478.

Executive Order 12372 (Intergovernmental Review of Federal Programs). Proposals under this program are not subject to Executive Order 12372.

Administrative Procedure Act and Regulatory Flexibility Act. Prior notice and comment are not required under 5 U.S.C. 553, or any other law, for rules relating to public property, loans, grants, benefits or contracts (5 U.S.C. 553(a)). Because prior notice and an opportunity for public comment are not required pursuant to 5 U.S.C. 553 or any other law, the analytical requirements of the Regulatory Flexibility Act (5 U.S.C. *et seq*.) are inapplicable. Therefore, a regulatory flexibility analysis is not required and has not been prepared.

E.O. 13132 (Federalism). This notice does not contain policies with Federalism implications as defined in Executive Order 13132.

E.O. 12866 (Regulatory Planning and Review). This notice is not a significant regulatory action under Sections 3(f)(3) and 3(f)(4) of Executive Order 12866, as it does not materially alter the budgetary impact of a grant program and does not raise novel policy issues. This notice is not an ''economically significant'' regulatory action under Section 3(f)(1) of the Executive Order, as it does not have an effect on the economy of $100 million or more in any one year, and it does not have a material adverse effect on the economy, a sector of the economy, productivity, competition, jobs, the environment, public health or safety, or State, local, or tribal governments or communities.

Paperwork Reduction Act. Notwithstanding any other provision of the law, no person is required to, nor shall any person be subject to penalty for failure to, comply with a collection of information, subject to the requirements of the Paperwork Reduction Act (PRA), unless that collection of information displays a currently valid Office of Management and Budget (OMB) Control Number. This notice contains collection-of-information requirements subject to the PRA. The use of Form NIST–1022, Standard Form–424 (R&R), SF–424B, SF–LLL, Research and Related Other Project Information Form, and CD–346 has been approved by OMB under the respective control numbers 0693–0050, 4040–0001, 4040–0007, 0348–0046, 4040–0001, and 0605–0001.

Administrative and National Policy Requirements. Department of Commerce Pre-Award Notification Requirements for Grants and Cooperative Agreements, 73 FR 7696–05 (Feb. 11, 2008), apply to this solicitation.

Dated: July 9, 2008.

James M. Turner,

Deputy Director.

[FR Doc. E8–16068 Filed 7–14–08; 8:45 am]

BILLING CODE 3510–13–P

DEPARTMENT OF COMMERCE

National Oceanic and Atmospheric Administration

RIN 0648–XJ03

Gulf of Mexico Fishery Management Council (Council); Public Meetings

AGENCY: National Marine Fisheries Service (NMFS), National Oceanic and Atmospheric Administration (NOAA), Commerce.

ACTION: Notice of public meetings.

SUMMARY: The Gulf of Mexico Fishery Management Council will convene public meetings.

DATES: The meetings will be held August 11 - 15, 2008.

ADDRESSES: The meetings will be held at the Hilton Key Largo, 97000 S. Overseas Hwy., Key Largo, FL 33037.

Council address: Gulf of Mexico Fishery Management Council, 2203 North Lois Avenue, Suite 1100, Tampa, FL 33607.

FOR FURTHER INFORMATION CONTACT: Richard Leard, Deputy Executive Director, Gulf of Mexico Fishery Management Council; telephone: (813) 348–1630.

SUPPLEMENTARY INFORMATION:

Council

Wednesday, August 13, 2008

3:30 p.m. - The Council meeting will begin with a review of the agenda and minutes.

The Council will review and discuss reports from the previous two days' committee meetings as follows:

3:45 p.m. - 5:30 p.m. - Ad Hoc Allocation.

6 p.m. - 7 p.m. - There will be an Open Public Question and Answer Session.

Thursday, August 14, 2008

8:30 a.m. - 12 noon - The Council will receive public testimony on exempted fishing permits (EFPs), if any; Final Reef Fish Amendment 30B; Final Amendment 8 to the Joint Spiny Lobster Fishery Management Plan (FMP). Following testimony, the Council will hold an Open Public Comment Period regarding any fishery issue of concern. People wishing to speak before the Council should complete a public comment card prior to the comment period.

1:30 p.m. - 5:30 p.m. - The Council will continue to review and discuss reports from the committee meetings as follows: Reef Fish Management; Joint Stone Crab/Spiny Lobster; Joint Reef Fish/Mackerel/Red Drum; Marine Reserves; and Administrative Policy.

Friday, August 15, 2008

The Council will continue to review and discuss reports from the committee meetings as follows:

8:30 a.m. - 9:30 a.m. - The Shrimp Management; Data Collection; Sustainable Fisheries/Ecosystem.

9:30 a.m. - 10:30 a.m. - Other Business items and the election of the Chairman and Vice Chairman. The Council will conclude its meeting at approximately 10:30 a.m.

Committees

Monday, August 11, 2008

9 a.m. - 12 p.m. & 1:30 p.m. - 5:30 p.m. - The Reef Fish Management Committee will meet to discuss Final Reef Fish Amendment 30B; Reef Fish Amendment 29; Southeast Data and Review (SEDAR) Terms of Reference (TOR) for Black Grouper; SEDAR TOR for stock Assessment Updates for Red Snapper, Gag, and Red Grouper; and Ad Hoc Recreational Red Snapper Advisory Panel (AP) Recommendations. The Council will also receive a document on changes in effort and fuel prices in the Gulf.

Tuesday, August 12, 2008

8:30 a.m. - 9:30 a.m. - The Reef Fish Management Committee will continue.

9:30 a.m. - 12 p.m. - The Administrative Policy Committee will meet to discuss Scientific and Statistical Committee (SSC) Comments on annual catch limit (ACL) and accountability measure (AM) Guidelines and Revised Statement of Organization Practices and Procedures (SOPP's).

1:30 p.m. - 3:30 p.m. - The Ad Hoc Allocation Committee will meet to discuss Fishing Communities and Social Aspects of Allocation; FMP Objectives; Net Benefits and Allocation; Landings, Total Allowable Catch (TAC) and Allocation Changes by Sector; Draft Allocation Principles and any Recommendations to the Council.

3:30 p.m. - 4:30 p.m. - The Stone Crab/Spiny Lobster Committee will meet to discuss the Final Amendment 8 to the Spiny Lobster FMP; Public Hearing Comments; Spiny Lobster AP

Recommendations and Committee Recommendations.

4:30 p.m. - 5:30 p.m. - The Sustainable Fisheries/Ecosystem Committee will meet to discuss the Ecosystem SSC Recommendations.

Wednesday, August 13, 2008

8:30 a.m. - 9 a.m. - CLOSED SESSION. The Joint AP Selection Committee/Outreach & Education Committee will meet in a Closed Session to discuss Selection of Outreach & Education AP members.

9 a.m. - 11 a.m. - The Joint Reef Fish/Mackerel/Red Drum Management Committee will meet to discuss the Aquaculture FMP.

11 a.m. - 12 p.m. - The Shrimp Management Committee will meet to discuss NMFS Status and Health of the Shrimp Stocks; A Stock Assessment Report for Gulf Of Mexico Shrimp 2007; and A Biological Review of the Tortugas Pink Shrimp Fishery Through December 2007.

1:30 p.m. - 3:30 p.m. - The Data Collection Committee will meet to discuss Recommendations of the Ad Hoc Recreational Red Snapper AP and Comments on Proposed Rule for National Saltwater Angler Registry. They will also receive a status report on the MRIP.

Although other non-emergency issues not on the agendas may come before the Council and Committees for discussion, in accordance with the Magnuson-Stevens Fishery Conservation and Management Act (Magnuson-Stevens Act), those issues may not be the subject of formal action during these meetings. Actions of the Council and Committees will be restricted to those issues specifically identified in the agendas and any issues arising after publication of this notice that require emergency action under Section 305(c) of the Magnuson-Stevens Act, provided the public has been notified of the Council's intent to take action to address the emergency.

The established times for addressing items on the agenda may be adjusted as necessary to accommodate the timely completion of discussion relevant to the agenda items. In order to further allow for such adjustments and completion of all items on the agenda, the meeting may be extended from, or completed prior to the date established in this notice.

Special Accommodations

These meetings are physically accessible to people with disabilities. Requests for sign language interpretation or other auxiliary aids should be directed to Tina O'Hern at the Council (see **ADDRESSES**) at least 5 working days prior to the meeting.

Dated: July 10, 2008.

Tracey L. Thompson,

Acting Director, Office of Sustainable Fisheries, National Marine Fisheries Service.

[FR Doc. E8–16108 Filed 7–14–08; 8:45 am]

BILLING CODE 3510–22–S

DEPARTMENT OF COMMERCE

National Oceanic and Atmospheric Administration

RIN 0648–XJ04

Pacific Fishery Management Council; Public Meeting

AGENCY: National Marine Fisheries Service (NMFS), National Oceanic and Atmospheric Administration (NOAA), Commerce.

ACTION: Notice of a public meeting.

SUMMARY: The Halibut Managers Workgroup (HMW) will hold a work session to discuss implications of the International Pacific Halibut Commission (IPHC) proposed catch apportionment methodology and to develop consensus on issues affecting Area 2A halibut fisheries prior to the IPHC workshop on catch apportionment. The HMW is not a committee of the Pacific Fishery Management Council (Council), however, the Council has expressed interest in having a report from the HMW, and has offered to provide meeting space. The meeting is open to the public.

DATES: The meeting will be held Thursday, August 7, 2008, from 9:30 a.m. to 4 p.m.

ADDRESSES: The meeting will be held at the Pacific Fishery Management Council Office, 7700 NE Ambassador Place, Suite 101, Portland, OR 97220–1384.

FOR FURTHER INFORMATION CONTACT: Mr. Chuck Tracy, Salmon and Halibut Management Staff Officer, Pacific Fishery Management Council, telephone: (503) 820–2280.

SUPPLEMENTARY INFORMATION: The purpose of the meeting is to allow an exchange of information and ideas among managers and industry representatives from Area 2A, primarily as they relate to the upcoming IPHC workshop on catch apportionment. The objective of the meeting will be to develop a consensus on a catch apportionment strategy that will be both fair and biologically sound, which can be presented at the IPHC workshop scheduled for September 4, 2008.

Although non-emergency issues not contained in the meeting agendas may come before the HMW for discussion, those issues may not be the subject of formal action during this meeting. Action will be restricted to those issues specifically listed in this notice and any issues arising after publication of this notice that require emergency action under Section 305(c) of the Magnuson-Stevens Fishery Conservation and Management Act, provided the public has been notified of the intent to take final action to address the emergency.

Special Accommodations

This meeting is physically accessible to people with disabilities. Requests for sign language interpretation or other auxiliary aids should be directed to Ms. Carolyn Porter at (503) 820–2280 at least 5 days prior to the meeting date.

Dated: July 10, 2008.

Tracey L. Thompson,

Acting Director, Office of Sustainable Fisheries, National Marine Fisheries Service.

[FR Doc. E8–16109 Filed 7–14–08; 8:45 am]

BILLING CODE 3510–22–S

DEPARTMENT OF COMMERCE

National Oceanic and Atmospheric Administration

RIN 0648–XI81

Small Takes of Marine Mammals Incidental to Specified Activities; Ocean Bottom Cable Seismic Survey in the Liberty Prospect, Beaufort Sea, Alaska in 2008

AGENCY: National Marine Fisheries Service (NMFS), National Oceanic and Atmospheric Administration (NOAA), Commerce.

ACTION: Notice; issuance of an incidental take authorization.

SUMMARY: In accordance with the Marine Mammal Protection Act (MMPA) regulations, notification is hereby given that NMFS has issued an IHA to BP Exploration (Alaska), Inc. (BPXA) to take, by harassment, small numbers of six species of marine mammals incidental to a 3D, ocean bottom cable (OBC) seismic survey in the Liberty Prospect, Beaufort Sea, Alaska during July and August, 2008.

DATES: Effective July 8, 2008, through August 25, 2008.

ADDRESSES: The application containing a list of the references used in this document, an addendum to the application, and the IHA are available by writing to P. Michael Payne, Chief, Permits, Conservation and Education

Division, Office of Protected Resources, National Marine Fisheries Service, 1315 East-West Highway, Silver Spring, MD 20910–3225 or by telephoning the contact listed below (**FOR FURTHER INFORMATION CONTACT**), or online at: *http://www.nmfs.noaa.gov/pr/permits/incidental.htm#applications*. Documents cited in this notice may be viewed, by appointment, during regular business hours, at the aforementioned address.

A copy of the 2006 Minerals Management Service's (MMS) Final Programmatic Environmental Assessment (PEA) and/or the NMFS/MMS Draft Programmatic Environmental Impact Statement (DPEIS) are available on the internet at: *http://www.mms.gov/alaska/*. A copy of NMFS' 2008 Supplemental Environmental Assessment (SEA) is available at *http://www.nmfs.noaa.gov/pr/permits/incidental.htm#applications*.

FOR FURTHER INFORMATION CONTACT: Candace Nachman, Office of Protected Resources, NMFS, (301) 713–2289 or Brad Smith, NMFS Alaska Region, (907) 271–3023.

SUPPLEMENTARY INFORMATION:

Background

Sections 101(a)(5)(A) and (D) of the MMPA (16 U.S.C. 1361 *et seq.*) direct the Secretary of Commerce to allow, upon request, the incidental, but not intentional, taking of small numbers of marine mammals by U.S. citizens who engage in a specified activity (other than commercial fishing) within a specified geographical region if certain findings are made and either regulations are issued or, if the taking is limited to harassment, a notice of a proposed authorization is provided to the public for review.

Authorization for incidental takings shall be granted if NMFS finds that the taking will have a negligible impact on the species or stock(s), will not have an unmitigable adverse impact on the availability of the species or stock(s) for subsistence uses (where relevant), and if the permissible methods of taking and requirements pertaining to the mitigation, monitoring and reporting of such takings are set forth. NMFS has defined ''negligible impact'' in 50 CFR 216.103 as ''...an impact resulting from the specified activity that cannot be reasonably expected to, and is not reasonably likely to, adversely affect the species or stock through effects on annual rates of recruitment or survival.''

Section 101(a)(5)(D) of the MMPA established an expedited process by which citizens of the United States can apply for an authorization to incidentally take small numbers of marine mammals by harassment. Except with respect to certain activities not pertinent here, the MMPA defines ''harassment'' as:

> any act of pursuit, torment, or annoyance which (i) has the potential to injure a marine mammal or marine mammal stock in the wild [Level A harassment]; or (ii) has the potential to disturb a marine mammal or marine mammal stock in the wild by causing disruption of behavioral patterns, including, but not limited to, migration, breathing, nursing, breeding, feeding, or sheltering [Level B harassment].

Section 101(a)(5)(D) establishes a 45–day time limit for NMFS review of an application followed by a 30–day public notice and comment period on any proposed authorizations for the incidental harassment of marine mammals. Within 45 days of the close of the comment period, NMFS must either issue or deny the authorization.

Summary of Request

On November 21, 2007, NMFS received an application from BPXA for the taking, by Level B harassment only, of small numbers of several species of marine mammals incidental to conducting a 3D, OBC seismic survey in the Liberty Prospect area of the Alaskan Beaufort Sea in 2008. BPXA submitted an addendum to their application on April 21, 2008, which updated the vessel inventory, refined the dates of the survey, and withdrew the request for take of one narwhal. The survey would occur over a period of 40–60 days in July and August, 2008, with operations ceasing on August 25 prior to the start of the Nuiqsut whaling season. Seismic data acquisition is planned to start in early July, depending on the presence of ice. Open water seismic operations can only start when the project area is ice free (i.e., less than 10 percent ice coverage), which in this area normally occurs around July 20 (+/- 14 days). Limited layout of receiver cables might be possible on the mudflats in the Sagavanirktok River delta areas before the ice has cleared.

The Liberty field contains one of the largest undeveloped light-oil reservoirs near the North Slope infrastructure, and the development of this field could recover an estimated 105 million barrels of oil. The field is located in Federal waters of the Beaufort Sea about 8.9 km (5.5 mi) offshore in 6.1 m (20 ft) of water and approximately 8 to 13 km (5 to 8 mi) east of the existing Endicott Satellite Drilling Island (SDI; see Figure 1 of BPXA's application). The project area encompasses 351.8 km^2 (135.8 mi^2) in Foggy Island Bay, Beaufort Sea, of which one percent is on mudflats, 18.5 percent is in water depths of 0.3–1.5 m (1–5 ft), 12.5 percent is in water depths of 1.5–3 m (5–10 ft), 43 percent is in water depths of 3–6.1 m (10–20 ft), and 25 percent is in water depths of 6.1–9.1 m (20–30 ft; see Figure 2 of BPXA's application). The approximate boundaries of the total surface area are between 70° 11' N. and 70° 23' N. and between 147° 10' W. and 148° 02' W.

Additional background information regarding BPXA's request was included in NMFS' Notice of Proposed IHA, which published in the **Federal Register** on May 2, 2008 (73 FR 24236).

Description of Activity

OBC seismic surveys are used to acquire seismic data in water that is too shallow for large marine-streamer vessels and/or too deep to have grounded ice in the winter. This type of seismic survey requires the use of multiple vessels for cable deployment/recovery, recording, shooting, and utility boats. The planned 3D, OBC seismic survey in the Liberty area will be conducted by CGGVeritas, a BPXA contractor. A detailed overview of the activities of this survey were provided in the Notice of Proposed IHA (73 FR 24236, May 2, 2008). No changes have been made to these proposed activities. Additional information is contained in BPXA's application and application addendum, which are available for review (see **ADDRESSES**).

Comments and Responses

A notice of receipt of BPXA's MMPA application and NMFS' proposal to issue an IHA to BPXA was published in the **Federal Register** on May 2, 2008 (73 FR 24236). That notice described, in detail, BPXA's proposed activity, the marine mammal species that may be affected by the activity, and the anticipated effects on marine mammals. During the 30–day public comment period on BPXA's application, comments were received from the Marine Mammal Commission (MMC), the Center for Biological Diversity (CBD) on behalf of several environmental organizations, the Alaska Eskimo Whaling Commission (AEWC), the North Slope Borough (NSB) Office of the Mayor and the NSB Department of Wildlife Management (DWM), the Native Village of Point Hope (NVPH), and Oceana and the Ocean Conservancy. CBD attached the comments submitted by the Natural Resources Defense Council (NRDC) on the 2006 MMS PEA as an appendix to its comments on the IHA. With the exception of some comments relevant to this specific action which are addressed here, comments on the Draft PEA have been addressed in Appendix D of the

Final PEA and are not repeated here. Copies of those comment letters and the responses to comments can be found at: *http://www.mms.gov/alaska/*. CBD also attached the comments submitted by EarthJustice on the 2007 DPEIS. Those comments are not substantially different from the comments submitted on the PEA. There are no specific comments in that appendix to the BPXA project that were not raised in their comment letter specific to the BPXA proposed IHA or on the PEA. Therefore, they are not addressed separately in this document.

General Activity Concerns

Comment 1: The AEWC attached a copy of the signed Conflict Avoidance Agreement (CAA) and the addendum to BPXA's application for an IHA. Both documents indicate that BPXA will cease all seismic operations on August 25. The clarification in timing provided by these documents addresses the concerns of the AEWC and the NSB regarding late season monitoring.

Response: NMFS has reviewed both of these documents and concurs that additional late season monitoring is not needed for the BPXA Liberty project since seismic activity will not occur after August 25.

Comment 2: CBD urges NMFS not to issue any take authorization to BPXA for the proposed activities unless and until the agency can ensure that mitigation measures are in place that truly avoid adverse impacts to all species and their habitats and only after full and adequate public participation has occurred and environmental review of the cumulative impacts of such activities on these species and their habitats has been undertaken. CBD feels that the proposed IHA does not meet these standards and therefore violates the MMPA, the Endangered Species Act (ESA), the National Environmental Policy Act (NEPA), and other governing statutes and regulations.

Response: In its proposed IHA **Federal Register** notice (73 FR 24236, May 2, 2008), NMFS outlined in detail the proposed mitigation and monitoring requirements. The implementation of these measures will reduce the impacts of the proposed survey on marine mammals and their surrounding environment to the lowest level practicable. The public was given 30 days to review and comment on these measures, in accordance with section 101(a)(5)(D) of the MMPA. NMFS has prepared a SEA to the 2006 MMS PEA. The PEA was available for comment in 2006. NMFS has fulfilled its obligations under NEPA by completing a SEA, which is not required to be available for public comment prior to its finalization. These documents fully analyze the cumulative impacts of seismic activity in the Arctic region. Additionally, NMFS completed a Biological Opinion in June, 2006, as required by section 7 of the ESA, which concluded that this action is not likely to jeopardize the continued existence of listed species or result in the destruction or adverse modification of critical habitat. The 2008 seismic survey in the Liberty Prospect area of the Beaufort Sea does not meet any of the triggers that would require reinitiating consultation. Therefore, NMFS has not violated the ESA.

Comment 3: CBD assumes that BPXA is seeking authorization from the U.S. Fish and Wildlife Service (USFWS) for the take of polar bears and Pacific walrus that will occur from their proposed activities. While these species are outside of NMFS' jurisdiction for purposes of take authorization, they are clearly part of the ''affected environment'' adversely impacted by NMFS' action and therefore cannot lawfully be simply discounted, as NMFS has done in the proposed IHA.

Response: Since the IHA issued by NMFS can only regulate take of species under NMFS' jurisdiction, the Notice of Proposed IHA does not go into detail regarding species under the jurisdiction of other Federal agencies. However, NMFS does analyze the impacts to these species in its NEPA analysis as part of the ''affected environment.'' The USFWS has issued a Letter of Authorization (LOA) for BPXA to take species under its jurisdiction (i.e., polar bears and walruses).

Comment 4: The NSB DWM states that transit of the *M/V Arctic Wolf* through the Chukchi Sea should not occur until the beluga harvest at Point Lay is completed. When it does transit through the Chukchi Sea, it should remain at least 80 km (50 mi) offshore to mitigate potential impacts to subsistence hunting of belugas, seals, or walrus.

Response: Transit of the *Arctic Wolf* through the Chukchi Sea will be done in accordance with the requirements in the CAA signed by BPXA on May 30, 2008.

Comment 5: Oceana and the Ocean Conservancy state that they agree with the concerns raised in the comment letter submitted on this application by CBD and others. The NVPH incorporated the CBD's comment in their entirety in their letter.

Response: NMFS' responses to the CBD's comments are addressed in this section of the document.

MMPA Concerns

Comment 6: CBD and the NSB state that because the proposed seismic activity carries the real potential to cause injury or death to marine mammals, neither an IHA nor an LOA (because NMFS has not promulgated regulations for mortality by seismic activities) can be issued for BPXA's proposed activities.

Response: Section 101(a)(5)(D) of the MMPA authorizes Level A (injury) harassment and Level B (behavioral) harassment takes. While NMFS' regulations indicate that a LOA must be issued if there is a potential for serious injury or mortality, NMFS does not believe that BPXA's seismic surveys require issuance of a LOA. As explained throughout this **Federal Register** Notice, it is highly unlikely that marine mammals would be exposed to sound pressure levels (SPLs) that could result in serious injury or mortality. The best scientific information indicates that an auditory injury is unlikely to occur as apparently sounds need to be significantly greater than 180 dB for injury to occur (Southall *et al.*, 2007). NMFS has determined that exposure to several seismic pulses at received levels near 200–205 dB (rms) might result in slight temporary threshold shift (TTS) in hearing in a small odontocete, assuming the TTS threshold is a function of the total received pulse energy. Seismic pulses with received levels of 200–205 dB or more are usually restricted to a radius of no more than 200 m (656 ft) around a seismic vessel operating a large array of airguns. BPXA's airgun array is considered to be of moderate size. For baleen whales, while there are no data, direct or indirect, on levels or properties of sound that are required to induce TTS, there is a strong likelihood that baleen whales (bowhead and gray whales) would avoid the approaching airguns (or vessel) before being exposed to levels high enough for there to be any possibility of onset of TTS. For pinnipeds, information indicates that for single seismic impulses, sounds would need to be higher than 190 dB rms for TTS to occur while exposure to several seismic pulses indicates that some pinnipeds may incur TTS at somewhat lower received levels than do small odontocetes exposed for similar durations. Consequently, NMFS has determined that it would be lawful to issue an IHA to BPXA for the 2008 seismic survey program.

Comment 7: CBD states that the MMPA allows take authorization only for explicitly ''specified activities'' within a ''specified geographic region'' (16 U.S.C. 1371(a)(5)(D)(i)). NMFS'

regulations also explicitly require an applicant for take authorization to provide the ''date(s) and duration'' of the activity and ''the specific geographic region where it will occur'' (50 CFR 216.104(a)(2)). While BPXA's application does generally describe the location and duration of the seismic activities themselves, there is minimal description and no analysis of the impacts on marine mammals of the transport and deployment of the 11 vessels that will be involved in the survey. Presumably, some or all of these vessels would transit through U.S. waters in the Bering, Chukchi, and/or Beaufort Seas and harass marine mammals along the way. By failing to adequately specify the activities and impacts of these vessels, BPXA has failed to comply with (16 U.S.C. 1371(a)(5)(D)(i) and 50 CFR 216.104(a)(2)).

Response: The majority of the vessels to be used in the seismic survey will be transported to the North Slope on trailers via the haul road to West Dock; however, one vessel will transit the Arctic Ocean to the survey area, leaving from Anchorage and steaming well offshore around Pt Barrow to West Dock. Normal shipping and transit operations do not rise to a level requiring an authorization under the MMPA. To require IHAs and LOAs for standard shipping would reduce the ability of NMFS to review activities that have a potential to cause harm to marine mammal populations. For example, in the Arctic Ocean, NMFS would need to issue authorizations for barging operations that supply the North Slope villages in addition to various onshore and offshore oil and gas projects. Instead, NMFS prefers to seek applications from activities that have a potential impact of a more serious nature, such as shipping and transit operations during the fall bowhead migration and subsistence harvest periods. On this matter, BPXA will (in keeping with the CAA signed by BPXA and the Native communities) follow a route 48 km (30 mi) offshore and will avoid Ledyard Bay.

Comment 8: The NSB and CBD both state that an authorization of incidental take of marine mammals from specified activities can only be issued if such take will be limited to ''small numbers'' and have a ''negligible impact'' on the species or stock (16 U.S.C. 1371(a)(5)(D)(i)(I); 50 CFR 206.107). These are separate and distinct statutory requirements (Id.). NMFS must find that both requirements are met. CBD states that NMFS does not make a separate finding that only ''small numbers'' of marine mammals will be harassed by BPXA's planned activities. The closest thing to a separate ''small numbers'' finding is a single sentence in the Preliminary Conclusions section of the proposed IHA. In recent proposed IHAs, NMFS has directly cited its invalid ''small numbers'' definition. In the current IHA, NMFS does not directly cite to the regulatory definition of ''small numbers'', but nevertheless conducts its analysis according to this invalid standard. Yet neither the **Federal Register** document nor BPXA's application provide any support whatsoever for this ''conclusion.'' The CBD continues that for BPXA's proposed seismic surveys in the Beaufort Sea, the number of marine mammals likely to be exposed to sounds of 160 dB re 1 μPa (rms) or greater, and therefore ''harassed'' according to NMFS' operative thresholds, is almost 300. In absolute terms this number cannot be considered ''small.'' Given the MMPA is designed to protect not just populations but *individual* [emphasis added by commenter] marine mammals, any number in the hundreds simply cannot be considered ''small.'' The proposed seismic surveys simply are not designed to avoid impacting more than small numbers of marine mammals, and, therefore, the IHA must be denied.

Response: NMFS believes that the small numbers requirement has been satisfied. The species most likely to be harassed during seismic surveys in the Liberty Prospect area of the Beaufort Sea is the ringed seal, with an ''average estimate'' of 156 exposures to SPLs of 160 dB or greater at 4 m (13 ft) tow depth. This does not mean that this is the number of ringed seals that will *actually* exhibit a disruption of behavioral patterns in response to the sound source; rather, it is simply the best estimate of the number of animals that potentially could have a behavioral modification due to the noise. For example, Moulton and Lawson (2002) indicate that most pinnipeds exposed to seismic sounds lower than 170 dB do not visibly react to that sound, and, therefore, pinnipeds are not likely to react to seismic sounds unless they are greater than 170 dB re 1 Pa (rms). In addition, these estimates are calculated based upon line miles of survey effort, animal density, and the calculated zone of influence (ZOI). While this methodology is valid for seismic surveys that transect long distances, for those surveys that ''mow the lawn'' (that is, remain within a relatively small area, transiting back and forth while shooting seismic), the numbers tend to be highly inflated. However, BPXA tried to eliminate some of the overlap by entering the seismic survey lines into a MapInfo Geographic Information System (GIS) to determine the area of ensonification. GIS was then used to identify the relevant areas by ''drawing'' the applicable 160–dB buffer around each seismic source line and then to calculate the total area within the buffers. This method avoids the large overlap of buffer zones from each seismic source line and hence an overestimation of the potential number of marine mammals exposed.

The Level B harassment take estimate of 156 ringed seals is a small number, at least in relative terms, in that it represents only 0.06 percent of the regional stock size of that species (249,000), if each ''exposure'' at 160 dB represents an individual ringed seal. The percentage would be even lower if a higher SPL is required for a behavioral reaction (as is expected) or, if as expected, animals move out of the seismic area. As a result, NMFS believes that these ''exposure'' estimates are conservative, and seismic surveys will actually affect less than 0.06 percent of the Beaufort Sea ringed seal population.

The ''average estimates'' of exposures for the remaining species that could potentially occur in the Liberty Prospect (i.e., beluga, bowhead, and gray whales and bearded and spotted seals) are only between 1 and 11 animals, which constitute at most 0.09 percent of any of these five species populations in the Arctic. Additionally, the presence of beluga, bowhead, and gray whales in the shallow water environment within the barrier islands is possible but expected to be very limited.

Further, NMFS believes that it is incorrect to add the number of exposures together to support an argument that the numbers are not ''small.'' The MMPA is quite clear ''...taking by harassment of small numbers of marine mammals of a species or population stock...'' does not refer to an additive calculation (small numbers, not small number).

Based on the fact that only small numbers of each species or stock will possibly be impacted and mitigation and monitoring measures will reduce the number of animals likely to be exposed to seismic pulses and therefore avoid injury and mortality, NMFS finds that BPXA's 3D OBC seismic survey will have a negligible impact on the affected species or stock.

Comment 9: CBD states that in 2006, NMFS required surveys of a 120–dB safety zone for bowhead cow/calf pairs and ''large groups'' (greater than 12 individuals). If 12 bowheads constitute a ''large group,'' we do not see how the numerous bowheads that will be

harassed by BPXA are a ''small number.'' This displacement and the disruption of pod integrity clearly constitute harassment under the MMPA. BPXA's activities can be expected to have similar effects. As with its ''small numbers'' conclusion, NMFS' determination that BPXA's activities will have a ''negligible impact'' also does not withstand scrutiny. First, as explained above and in our NEPA comments, the calculation of numbers of marine mammals harassed by BPXA is likely an underestimate as it relies on a received sound threshold (160/170 dB) that is too high. Any negligible impacts determination based on such flawed data is itself unsupportable. Moreover, NMFS has previously recognized a harassment threshold of 120 dB for continuous sounds. Given that BPXA is using two seismic ships in conjunction, firing every 4 s, these sources should be treated as ''continuous'' for purposes of estimating harassment thresholds. The MMPA is precautionary. In making its determinations, NMFS must give the benefit of the doubt to the species. As the D.C Circuit has repeatedly stated, ''it is clear that 'the Act was to be administered for the benefit of the protected species rather than for the benefit of commercial exploitation''' (*Kokechik Fishermen's Association* v. *Secretary of Commerce*, 839 F.2d 795, 800 (D.C. Cir. 1988) citing *Committee for Humane Legislation, Inc.* v. *Richardson*, 540 F.2d 1141, 1148 (D.C. Cir. 1976)). NMFS seems to be ignoring this mandate in analyzing the impacts of BPXA's activities.

Response: On CBD's first point, there is no relationship between the term ''large group'' and ''small numbers.'' The first term refers to a number of 12 or more in order to implement additional mitigation measures, the second to a concept found in the MMPA, which has been addressed previously in this notice. NMFS agrees that while the ''displacement and the disruption of pod integrity constitute harassment under the MMPA,'' NMFS is unaware of any information that seismic survey operations will result in bowhead whale pod integrity disruption. On the contrary, traditional knowledge indicates that when migrating bowhead whales encounter anthropogenic noises, as a group they all divert away from the noise and continue to do so even if the noise ceases.

Secondly, NMFS does not agree that the source used in BPXA's activity should be considered ''continuous.'' As mentioned in the IHA application and the **Federal Register** notice of proposed IHA (73 FR 24236, May 2, 2008), each source vessel will have two 440 in^3 arrays comprised of four guns in clusters of 2 x 70 in^3 and 2 x 150 in^3. Each source vessel will fire shots every 8 s, resulting in 4 s shot intervals with two operating source vessels. As the total time for each seismic ''shot'' will last approximately 6 msec, the amount of time without seismic sounds is 99.85 percent. As there is a significant period of time between shot events, this does not qualify as a continuous sound source.

The decision in *Kokechik Fishermen's Association* v. *Secretary of Commerce*, 839 F.2d 795 (D.C. Circ. 1988), does not apply to this case because it is factually and legally distinguishable. The incidental take permit challenged in Kokechik was for commercial fishing operations, governed by section 101(a)(2) of the MMPA, whereas the incidental authorization that is the subject of this IHA is for an activity other than commercial fishing and is appropriately authorized pursuant to section 101(a)(5)(D). Consequently, as discussed throughout this document, it is not unlawful for NMFS to apply section 101(a)(5)(D) when issuing an IHA to BPXA for the take of marine mammals incidental to seismic surveys.

Comment 10: Additionally, CBD and NSB state that NMFS has no idea of the actual population status of several of the species subject to the proposed IHA. For example, in the most recent Stock Assessment Reports (SARs) prepared pursuant to the MMPA, NMFS acknowledges it has no accurate information on the status of ribbon, spotted, bearded, and ringed seals. See 2007 Alaska SAR at 58 (''A reliable abundance estimate for the Alaska stock of ribbon seals is currently not available,'' and ''reliable data on trends in population abundance for the Alaska stock of ribbon seals are unavailable.'') *Id.* at 45 & 46 (''A reliable estimate of spotted seal population abundance is currently not available,'' and ''reliable data on trends in population abundance for the Alaska stock of spotted seals are considered unavailable.'') *Id.* at 49 & 50 (''There is no reliable population abundance estimate for the Alaska stock of bearded seals,'' and ''At present, reliable data on trends in population abundance for the Alaska stock of bearded seals are unavailable.''); and *Id.* at 53 & 54 (''There is no reliable population abundance estimate for the Alaska stock of ringed seals,'' and ''At present, reliable data on trends in population abundance for the Alaska stock of ringed seals are unavailable.'') CBD and NSB both indicate that without this data, NMFS cannot make a rational ''negligible impact'' finding. This is particularly so given there is real reason to be concerned about the status of these populations. Such concerns were raised in a recent letter to NMFS from the MMC following the MMC's 2005 annual meeting in Anchorage, Alaska. With regard to these species, the MMC cautioned against assuming a stable population. ''Given apparent changes in the Bering, Chukchi, and Beaufort Seas and the declines of many other Alaska marine mammals, we are concerned that significant changes in the status of these seal species might go undetected and that the need for management actions would not be recognized in time to assure their conservation and continued function in these ecosystems, as well as their availability for subsistence use'' (MMC, January 25, 2006 Letter).

On December 20, 2007, CBD petitioned NMFS to list the ribbon seal under the ESA due to the loss of its sea-ice habitat from global warming and the adverse impacts of oil industry activities on the species. On May 27, 2008, CBD submitted a similar petition seeking listing of the spotted, bearded, and ringed seals. We request that NMFS consider the information contained in these petitions, as well as other information in its files on the status of these species, when analyzing the impacts of the proposed IHA on these increasingly imperiled species. Because the status of the ribbon, spotted, ringed, and bearded seals and other stocks is unknown, NMFS cannot conclude that surveys which will harass untold numbers of individuals of each species will have no more than a ''negligible effect'' on the stocks.

Response: As required by the MMPA implementing regulations at 50 CFR 216.102(a), NMFS has used the best scientific information available in making its determinations required under the MMPA. The Alaska SAR provides population estimates based on past survey work conducted in the region. The proposed survey by BPXA is not expected to have adverse impacts on ice seals. The activity will last for approximately 40 days in the open-water environment of the Beaufort Sea, where bearded and spotted seals are found only occasionally. On March 28, 2008, NMFS published a notice of a 90–day petition finding, request for information, and initiation of status reviews of ribbon, bearded, ringed, and spotted seals (73 FR 16617). The comment period for this action closed on May 27, 2008. NMFS is currently reviewing all relevant information and within 1 year of receipt of the petition, NMFS shall conclude the review with a finding as to whether or not the petitioned action is warranted. The

ribbon seal petition submitted in December, 2007, is not relevant for this survey, as ribbon seals are not found in the project area. Information contained in the May, 2008, petition does not provide sufficient evidence that NMFS' preliminary determination that only small numbers of ringed, bearded, and spotted seals would be affected as a result of BPXA's seismic activity in the Liberty Prospect.

Comment 11: CBD states that the analyses in the proposed IHA are largely confined to looking at the immediate effects of BPXA's airgun surveys in the Beaufort Sea on several marine mammal species. However, there is no analysis of the impacts of the 11 vessels and any related aircraft participating in the surveys on marine mammals. The impacts of these activities must be analyzed and mitigated before any ''negligible impact'' finding can be made. CBD and NSB believe that NMFS must consider these effects together with other oil and gas activities that affect these species, stocks and local populations, other anthropogenic risk factors such as climate change, and the cumulative effect of these activities over time. The effects should be analyzed with respect to their potential population consequences at the species level, stock level, and at the local population level. See *Anderson* v. *Evans*, 350 F.3d 815 (9th Cir. 2003) as amended by 371 F.3d 475 (9th Cir. 2004) (''Even if the eastern Pacific gray whales overall or the smaller PCFA group of whales are not significantly impacted by the Makah Tribe's whaling, the summer whale population in the local Washington area may be significantly affected. Such local effects are a basis for a finding that there will be a significant impact from the Tribe's hunts.'')

Response: Under section 101(a)(5)(D) of the MMPA, NMFS is required to determine whether the taking by the applicant's specified activity will have a negligible impact on the affected marine mammal species or population stocks. Cumulative impact assessments are NMFS' responsibility under NEPA, not the MMPA. In that regard, the MMS Final PEA and NMFS SEA address cumulative impacts. The Final PEA's cumulative activities scenario and cumulative impact analysis focused on oil and gas-related and non-oil and gas-related noise-generating events/activities in both Federal and State of Alaska waters that were likely and foreseeable. Other appropriate factors, such as Arctic warming, military activities, and noise contributions from community and commercial activities were also considered. Appendix D of the Final PEA addresses similar comments on cumulative impacts, including global warming. That information was incorporated into and updated in the NMFS 2008 SEA and into this document by citation. NMFS adopted the MMS Final PEA, and it is part of NMFS' Administrative Record. Finally, the proposition for which CBD cites Anderson was in the context of the court's analysis under NEPA, not MMPA section 101(a)(5)(D) authorizations, which was not at issue in *Anderson*.

NMFS does not require authorizations under section 101(a)(5) of the MMPA for normal shipping or transit. A further explanation was addressed in the response to Comment 7.

Comment 12: NSB and CBD are both concerned about cumulative impacts from multiple operations. BPXA's proposal is only one of numerous oil industry activities recently occurring, planned, or ongoing in the U.S. portions of the Chukchi and Beaufort Seas (e.g., proposed IHA for on-ice seismic surveys in Harrison Bay; proposed scientific seismic survey by the National Science Foundation (NSF); NMFS' 5–year regulations for activities related to Northstar; Shell IHA for Beaufort Sea exploratory drilling; Conoco IHA for Beaufort Sea; Shell IHA for Beaufort Sea; two proposed IHAs for Chukchi Sea and two proposed for the Beaufort Sea; and USFWS 5–year regulations for oil and gas activities in the Beaufort Sea). No analysis of seismic surveys in the Russian or Canadian portions of the Chukchi and Beaufort seas is mentioned either. Similarly, significant increases in onshore oil and gas development with attendant direct impacts and indirect impacts on marine mammals such as through increased ship traffic are also occurring and projected to occur at greater rates than in the past (e.g., NMFS' IHA for barge traffic to NPR-A; IHA for barge operations in the Beaufort Sea; and a notice regarding new oil and gas development in the NPR-A). CBD states that further cumulative effects impacting the marine mammals of the Beaufort and Chukchi Seas are outlined in their NEPA comments on the MMS PEA and the DPEIS.

The NSB points out that in addition to the proposed offshore industrial operations listed above, there will be supply and fuel barging to villages, barging for support of onshore development and exploration, scientific cruises, climate change studies, USCG operations, tourist vessel traffic, and other activities as well. The cumulative impacts of all these activities must be factored into any negligible impact determination. Further, without an analysis of the effects of all of the planned operations, it is impossible to determine whether the monitoring plans are sufficient.

Response: See the response to the previous comment. The issue of cumulative impacts has been addressed in the 2006 MMS Final PEA and the 2008 NMFS SEA.

Comment 13: According to CBD, another factor causing NMFS' ''negligible impact'' findings to be suspect is the fact that the Beaufort Sea area is undergoing rapid change as a result of global warming. For species under NMFS' jurisdiction, and therefore subject to the proposed IHA, seals are likely to face the most severe consequences. The Arctic Climate Impact Assessment (ACIA) concluded that ringed, spotted, and bearded seals would all be severely negatively impacted by global warming this century. The ACIA stated that ringed seals are particularly vulnerable: ''Ringed seals are likely to be the most highly affected species of seal because all aspects of their lives are tied to sea ice'' (ACIA, 2004). In 2003, the NRC noted that oil and gas activities combined with global warming presented a serious cumulative impact to the species: ''Climate warming at predicted rates in the Beaufort Sea region is likely to have serious consequences for ringed seals and polar bears, and those effects will accumulate with the effects of oil and gas activities in the region.'' NMFS' failure to address global warming as a cumulative effect renders its negligible impact findings invalid.

Response: Under section 101(a)(5)(D) of the MMPA, ''the Secretary shall authorize... taking by harassment of small numbers of marine mammals of a species or population stock by such citizens while engaging in that activity within that region if the Secretary finds that such harassment during each period concerned (I) will have a negligible impact on such species or stock, and (II) will not have an unmitigable adverse impact on the availability of such species or stock for taking for subsistence uses.'' Section 101(a)(5)(D) of the MMPA does not require NMFS to base its negligible impact determination on the possibility of cumulative effects of other actions.

As stated in previous responses, cumulative impact assessments are NMFS' responsibility under NEPA, not the MMPA. In that regard, the MMS 2006 Final PEA and NMFS' 2008 SEA address cumulative impacts. The PEA's cumulative activities scenario and cumulative impact analysis focused on oil and gas-related and non-oil and gas-

related noise-generating events/activities in both Federal and State of Alaska waters that were likely and foreseeable. Other appropriate factors, such as Arctic warming, military activities, and noise contributions from community and commercial activities were also considered. Appendix D of the PEA addresses similar comments on cumulative impacts, including global warming. That information was incorporated into and updated in the NMFS 2008 SEA and into this document by citation. NMFS adopted the MMS Final PEA, and it is part of NMFS' Administrative Record.

Comment 14: The NSB states that the proposed IHA should be more specific in defining dates for which seismic activities will be permitted. BPXA suggests the seismic surveys will take 60 days to complete. The company currently intends to conduct sound source verification of the airgun arrays and for the vessels to be used for the seismic surveys on July 15, 2008 (based on recent correspondence from BPXA to the AEWC). Therefore, the surveys are not likely to be completed by the end of August. NMFS should make clear that the IHA permits seismic surveying only until the end of August. Seismic activity should cease during the bowhead whale hunt at Kaktovik and Nuiqsut.

Response: BPXA has informed NMFS that they have agreed to end all airgun activity on August 25 before the beginning of the bowhead whale hunt at Kaktovik and Nuiqsut. This change in duration is reflected in this notice.

Marine Mammal Impact Concerns

Comment 15: CBD states that they referenced the scientific literature linking seismic surveys with marine mammal stranding events in its comments to MMS on the 2006 Draft PEA and in comments to NMFS and MMS on the 2007 DPEIS. NMFS' failure to address these studies and the threat of serious injury or mortality to marine mammals from seismic surveys renders NMFS' conclusory determination that serious injury or morality will not occur from BPXA's activities arbitrary and capricious.

Response: MMS briefly addressed the humpback whale stranding in Brazil on page PEA–127 in the Final PEA. Marine mammal strandings are also discussed in the NMFS/MMS DPEIS. A more detailed response to the cited strandings has been provided in several previous IHA issuance notices for seismic surveys. Additional information has not been provided by CBD or others regarding these strandings. As NMFS has stated, the evidence linking marine mammal strandings and seismic surveys remains tenuous at best. Two papers, Taylor *et al.* (2004) and Engel *et al.* (2004), reference seismic signals as a possible cause for a marine mammal stranding. Taylor *et al.* (2004) noted two beaked whale stranding incidents related to seismic surveys. The statement in Taylor *et al.* (2004) was that the seismic vessel was firing its airguns at 1300 hrs on September 24, 2004, and that between 1400 and 1600 hrs, local fishermen found live-stranded beaked whales some 22 km (12 nm) from the ship's location. A review of the vessel's trackline indicated that the closest approach of the seismic vessel and the beaked whales' stranding location was 33 km (18 nm) at 1430 hrs. At 1300 hrs, the seismic vessel was located 46 km (25 nm) from the stranding location. What is unknown is the location of the beaked whales prior to the stranding in relation to the seismic vessel, but the close timing of events indicates that the distance was not less than 33 km (18 nm). No physical evidence for a link between the seismic survey and the stranding was obtained. In addition, Taylor *et al.* (2004) indicate that the same seismic vessel was operating 500 km (270 nm) from the site of the Galapagos Island stranding in 2000. Whether the 2004 seismic survey caused two beaked whales to strand is a matter of considerable debate (see Cox *et al.*, 2004). NMFS believes that scientifically, these events do not constitute evidence that seismic surveys have an effect similar to that of mid-frequency tactical sonar. However, these incidents do point to the need to look for such effects during future seismic surveys. To date, follow-up observations on several scientific seismic survey cruises have not indicated any beaked whale stranding incidents.

Engel *et al.* (2004), in a paper presented to the International Whaling Commission (IWC) in 2004 (SC/56/E28), mentioned a possible link between oil and gas seismic activities and the stranding of eight humpback whales (seven off the Bahia or Espirito Santo States and one off Rio de Janeiro, Brazil). Concerns about the relationship between this stranding event and seismic activity were raised by the International Association of Geophysical Contractors (IAGC). The IAGC (2004) argues that not enough evidence is presented in Engel *et al.* (2004) to assess whether or not the relatively high proportion of adult strandings in 2002 is anomalous. The IAGC contends that the data do not establish a clear record of what might be a ''natural'' adult stranding rate, nor is any attempt made to characterize other natural factors that may influence strandings. As stated previously, NMFS remains concerned that the Engel *et al.* (2004) article appears to compare stranding rates made by opportunistic sightings in the past with organized aerial surveys beginning in 2001. If so, then the data are suspect.

Second, strandings have not been recorded for those marine mammal species expected to be harassed by seismic in the Arctic Ocean. Beaked whales and humpback whales, the two species linked in the literature with stranding events with a seismic component are not located in the area of the Beaufort Sea where seismic activities would occur (although humpback whales have been spotted in the Chukchi Sea and much farther west in the Beaufort Sea). Moreover, NMFS notes that in the Beaufort Sea, aerial surveys have been conducted by MMS and industry during periods of industrial activity (and by MMS during times with no activity). No strandings or marine mammals in distress have been observed during these surveys; nor reported by NSB inhabitants. Finally, if bowhead and gray whales react to sounds at very low levels by making minor course corrections to avoid seismic noise and mitigation measures require BPXA to ramp-up the seismic array to avoid a startle effect, strandings are highly unlikely to occur in the Arctic Ocean. Ramping-up of the array will allow marine mammals the opportunity to vacate the area of ensonification and thus avoid any potential injury or impairment of their hearing capabilities. In conclusion, NMFS does not expect any marine mammals will incur serious injury or mortality as a result of seismic surveys in the Beaufort Sea in 2008.

Comment 16: CBD states that seismic surveys pose the risk of permanent hearing loss by marine mammals, which itself is a ''serious injury'' likely to lead to the death of these animals. Seismic pulses of sufficient volume, such as those proposed to be used by BPXA, have the potential to cause temporary and permanent hearing loss in marine mammals.

Response: NMFS does not expect that animals will be injured, or for that matter seriously injured or killed, if they are within the 180 dB (cetaceans) and 190 dB (pinnipeds) isopleths. These criteria were set to approximate where Level A harassment (defined as ''any act of pursuit, torment or annoyance which has the potential to injure a marine mammal or marine mammal stock in the wild'') from acoustic sources begins. NMFS has determined that a TTS,

which is the mildest form of hearing impairment that can occur during exposures to a strong sound may occur at these levels. For sound exposures at or somewhat above TTS, hearing sensitivity recovers rapidly after exposure to the noise ends. Few data on sound levels and durations necessary to elicit mild TTS have been obtained for marine mammals, and none of the published data concern TTS elicited by exposure to multiple pulses of sound. TTS is not an injury, as there is no injury to individual cells.

As NMFS has published several times in **Federal Register** notices regarding issuance of IHAs for seismic survey work or in supporting documentation for such authorizations, for whales exposed to single short pulses, the TTS threshold appears to be a function of the energy content of the pulse. Given the data available at the time of the IHA issuance, the received level of a single seismic pulse might need to be approximately 210 dB re 1 μPa rms in order to produce brief, mild TTS. Exposure to several seismic pulses at received levels near 200–205 dB (rms) might result in slight TTS in a small odontocete, assuming the TTS threshold is a function of the total received pulse energy. Seismic pulses with received levels of 200–205 dB or more are usually restricted to a radius of no more than 200 m (656 ft) around a seismic vessel operating a large array of airguns. Since BPXA is operating a moderate-sized array, this array would be even smaller. For baleen whales, there are no data, direct or indirect, on levels or properties of sound that are required to induce TTS. However, there is a strong likelihood that baleen whales (bowhead and gray whales) would avoid the approaching airguns (or vessel) before being exposed to levels high enough for there to be any possibility of onset of TTS.

A marine mammal within a radius of 100 m (328 ft) or less around a typical large array of operating airguns may be exposed to a few seismic pulses with levels greater than or equal to 205 dB and possibly more pulses if the marine mammal moves with the seismic vessel. When permanent threshold shift (PTS) occurs, there is physical damage to the sound receptors in the ear. In some cases, there can be total or partial deafness, whereas in other cases, the animal has an impaired ability to hear sounds in specific frequency ranges. However, there is no specific evidence that exposure to pulses of airgun sound can cause PTS in any marine mammal, even with airgun arrays larger than that proposed to be used in BPXA's survey. Given the possibility that mammals close to an airgun array might incur TTS, there has been further speculation about the possibility that some individuals occurring very close to airguns might incur PTS. Single or occasional occurrences of mild TTS are not indicative of permanent auditory damage in terrestrial mammals. Relationships between TTS and PTS thresholds have not been studied in marine mammals but are assumed to be similar to those in humans and other terrestrial mammals.

The information provided here regarding PTS is for large airgun arrays. BPXA is proposing to use an 880 in^3 array, which is considered mid-size. Therefore, animals would have to be very close to the vessel to incur serious injuries. Because of the monitoring and mitigation measures required in the IHA (i.e., marine mammal observers [MMOs], ramp-up, power-down, shutdown, etc.), it is expected that appropriate corrective measures can be taken to avoid any injury, including serious injury.

Comment 17: The NSB DWM states that the summary in Section 3 of BPXA's application reflects the changes that have been observed in recent years regarding the distribution of marine mammals. Industrial surveys have revealed marine mammals not commonly seen in the Chukchi and Beaufort Seas until recently. These include fin, minke, and humpback whales. Hunters have noticed increased numbers of narwhals as well. While BPXA has appropriately included most of these species in this section, it has not included humpback whales. MMOs hired by industry have encountered humpback whales in the Beaufort Sea more frequently than they have seen fin or minke whales. According to the NSB DWM, humpback whales should too be considered in BPXA's IHA application. Additionally, the NSB feels that Section 4 of BPXA's application provides a good summary of the stocks of marine mammals that may be encountered in the area that BPXA has proposed to conduct seismic surveys. However, humpbacks should be considered in assessments of takes of marine mammals from seismic surveys in the Beaufort and Chukchi Seas.

Response: Until 2007, historic and recent information did not indicate humpback whales inhabit northern portions of the Chukchi Sea or enter the Beaufort Sea. No sightings of humpback whales were reported during aerial surveys of endangered whales in summer (July) and autumn (August-October) of 1979–1987 in the Northern Bering Sea (from north of St. Lawrence Island), the Chukchi Sea north of lat. 66° N. and east of the International Date Line, and the Alaskan Beaufort Sea from long. 157° 01' W. east to long. 140° W. and offshore to lat. 72° N. (Ljungblad *et al.*, 1988). Humpbacks have not been observed during annual aerial surveys of the Beaufort Sea conducted in September and October from 1982–2007 (e.g., Monnett and Treacy, 2005; Moore *et al.*, 2000; Treacy, 2002; Monnett, 2008, pers. comm.). During a 2003 research cruise in which all marine mammals observed were recorded from July 5 to August 18 in the Chukchi and Beaufort Seas, no humpback whales were observed (Bengtson and Cameron, 2003). One observation of one humpback whale was recorded in 2006 by MMOs aboard a vessel in the southern Chukchi Sea outside of the Chukchi Sea Planning Area (Patterson *et al.*, 2007; MMS, 2006, unpublished data). During summer 2007 between August 1 and October 16, humpback whales were observed during seven observation sequence events in the western Alaska Beaufort Sea (1 animal) and eastern and southeastern Chukchi Sea (6 animals; MMS, 2007, unpublished data) and one other observation in the southern Chukchi Sea in 2007 (Sekiguchi, In prep.). The one humpback sighting in the Beaufort Sea in 2007 was in Smith Bay, which is hundreds of kilometers west of the BPXA project area. Therefore, humpback whales are not expected to occur in the Liberty Prospect area, the location of BPXA's survey.

Comment 18: CBD and the NSB state that NMFS' estimate of the number of marine mammals that may be harassed under the proposed authorization is based on the assumption that sounds below 160 dB re 1 μPa (rms) do not constitute harassment. This assumption is incorrect, and therefore BPXA's and NMFS' estimated take numbers represent an underestimate of the possible true impact. As noted above, an activity can constitute harassment if it has the ''potential'' to affect marine mammal behavior. In our NEPA comments on the 2006 PEA, we pointed out the numerous studies showing significant behavioral impacts from received sounds well below 160 dB. Even the 2006 PEA itself acknowledges that impacts to bowheads occur at levels of 120 dB and below. This clearly meets the statutory definition of harassment and demonstrates that the numbers of bowhead estimated in the proposed IHA to be taken by BPXA's activities likely constitute a significant underestimate. NMFS' ''small numbers'' conclusion is therefore arbitrary and capricious for this reason as well.

The NSB DWM notes that BPXA suggests that bowheads are responsive to industrial sounds to the 160 to 170 dB zones. However, it is not clear why they do not also acknowledge that bowheads avoided an area around active seismic to much lower sound levels, down to 120 dB or lower (Richardson *et al.*, 1999). Furthermore, BPXA has avoided referencing studies from Northstar showing that bowheads are deflected by very low levels of industrial sounds, possibly even lower than 120 dB. Bowheads' sensitivity to very low level of industrial sounds must be considered in assessing impacts from one industrial operation, as well as impacts from cumulative impacts from multiple operations.

Response: On the first point, NMFS uses the best science available when making its determinations under section 101(a)(5)(D) of the MMPA. On the second point, CBD misunderstands the purpose of ''potential to harass'' in the MMPA. This was not meant to mean that highly speculative numbers of marine mammals could ''potentially be harassed'' but that Congress intended for U.S. citizens to apply for an MMPA authorization prior to its activity taking marine mammals, not waiting until after the taking occurred and someone needed to ''prove'' that the taking happened.

As stated previously, the ''take'' numbers provided in BPXA's application are considered the numbers of animals ''exposed'' to the sounds based on species density, the area potentially affected, and the length of time the noise would be expected to last. This does not necessarily indicate that all animals will have a significant behavioral reaction to that sound at the level of 160 dB. In addition, CBD took the maximum number of marine mammals (based on animal density), instead of the expected density (as explained in BPXA's application). Using maximum density estimates is problematic as it tends to inflate harassment take estimates to an unreasonably high number and is not based on empirical science. As a result, and understanding the assumptions made in BPXA's IHA application, NMFS believes that far fewer marine mammals would receive SPLs sufficient to cause a significant biological reaction by the species. In regard to bowhead whales, while this species reacts to sounds at levels lower than 160 dB, during its fall westward migration (but not while in a non-migratory behavior), those reactions are not detectable by MMOs and that information is obtained only later during computer analysis of collected data.

Richardson *et al.* (1999) monitored the reactions of migrating bowhead whales and found that most avoided the area of seismic activity within 20 km (12.4 mi) of the source at levels as low as 120–130 dB (rms). Also, the Northstar recordings are conducted during the fall migration westward across the Beaufort. Migration will not occur during the time of BPXA's survey. Therefore, the timing of the survey makes it unnecessary to monitor out to the 120–dB radius.

Lastly, the requirement to assess cumulative impacts is required under NEPA, not the MMPA. Cumulative impacts were assessed and analyzed in both the 2006 PEA and the 2008 SEA.

Comment 19: The NSB DWM and CBD states that a 160–dB threshold for belugas is similarly flawed. As NMFS is aware, belugas are among the most sensitive of marine mammals to anthropogenic sound. In previous IHA notices, NMFS has acknowledged the impacts of sounds on belugas even at significant distances from a sound source. For example, in a recent proposed take authorization related to seismic surveys by NSF, NMFS noted that belugas can be displaced at distances of up to 20 km (12.4 mi) from a sound source. Aerial surveys during seismic operations in the southeastern Beaufort Sea recorded much lower sighting rates of beluga whales within 10–20 km (6.2–12.4 mi) of an active seismic vessel. These results were consistent with the low number of beluga sightings reported by observers aboard the seismic vessel, suggesting that some belugas might be avoiding the seismic operations at distances of 10–20 km (6.2–12.4 mi). Such displacement clearly meets the statutory definition of harassment and demonstrates that the number of belugas estimated to be taken by BPXA's activities constitutes a significant underestimate. Belugas are also extremely sensitive to ships. A study of Canadian belugas showed flight responses from ice-breakers at received sound levels as low as 94 dB. Presumed alarm vocalizations of belugas indicated that they were aware of an approaching ship over 80 km (50 mi) away and they showed strong avoidance reactions to ships approaching at distances of 35–50 km (22–31 mi) when received noise levels ranged from 94 to 105 dB re 1 Pa in the 20–1000 Hz band. The ''flee'' response of the beluga involved large herds undertaking long dives close to or beneath the ice edge; pod integrity broke down and diving appeared asynchronous. Belugas were displaced along ice edges by as much as 80 km (50 mi; Finley *et al.*, 1990). The NSB DWM states that the 120–dB zone should be used for estimating numbers of beluga whales that may be taken during seismic operations in the Beaufort Sea, especially if BPXA surveys occur in September or later.

Response: BPXA will be conducting their activities in shallow waters of maximum 9.1 m (30 ft) deep inside the barrier islands of the Liberty Prospect in Foggy Island Bay in July and August (and not into September or later). Much of the Beaufort Sea seasonal population of belugas enters the Mackenzie River estuary (in Canada) for a short period from July through August to molt their epidermis, but they spend most of the summer in offshore waters of the eastern Beaufort Sea, Amundsen Gulf, and more northerly areas (Davis and Evans, 1982; Harwood *et al.*, 1996; Richard *et al.*, 2001). Belugas are rarely seen in the central Alaskan Beaufort Sea during the early summer. During late summer and autumn, most belugas migrate westward far offshore near the pack ice (Frost *et al.*, 1988; Hazard, 1988; Clarke *et al.*, 1993; Miller *et al.*, 1999), with the main fall migration corridor approximately 160 km (100 mi) or more north of the coast. Therefore, most belugas migrate well offshore away from the proposed project area, although there is a small possibility that they could occur near the project area in small numbers. Additionally, as BPXA does not intend to use ice-breakers during its seismic survey, statements regarding beluga reactions to ice-breaker noise are not relevant to this activity.

Estimated Take Calculation Concerns

Comment 20: The NSB DWM points out that BPXA states that the densities of marine mammals used to estimate takes are based on 95 percent of seismic surveys occurring in summer (i.e., July and August) and 5 percent occurring during fall (i.e., September). If the seismic surveys will last for 60 days and BPXA won't begin until mid-July (as BPXA recently informed the AEWC), the seismic surveys will last into mid-September. The timing and duration of seismic surveys suggests that 75 percent of the seismic surveys will occur in summer and 25 percent will occur in fall. Therefore, the estimated numbers of bowhead and beluga whales in BPXA's application and possibly other marine mammals that will be harassed are too low. The estimates of takes must be recalculated to provide a more realistic estimate of how many marine mammals will be taken. This correction is especially needed in assessing cumulative impacts to marine mammals from the multiple industrial activities planned for 2008.

Response: BPXA has informed NMFS that the survey will last for

approximately 40 days and that airgun activity will cease on August 25. Therefore, NMFS believes that a recalculation of the take estimates is not needed, as they may in fact be overestimates now that the duration of the project has been scaled back.

Subsistence Use Concerns

Comment 21: CBD states that the MMPA requires that any incidental take authorized will not have ''an unmitigable adverse impact on the availability of such species or stock for taking for subsistence uses'' by Alaska Natives. Additionally, CBD notes they are aware that the NVPH, a federally recognized tribal government, has submitted comments opposing the proposed take authorizations due to impacts on subsistence, and along with many community members has commented on myriad other related agency documents that have direct bearing on these take authorization such as the Chukchi Sea Sale 193, MMS Five-Year Plan, and the DPEIS. Similarly, the NSB, the AEWC, and REDOIL have all filed challenges in federal court and/or the IBLA challenging offshore activities due to impacts on the subsistence hunt of bowheads and other species. In light of the positions of these communities and organizations, we do not see how NMFS can lawfully make the findings required under the MMPA for approving BPXA's proposed IHA.

Response: NMFS believes that the concerns expressed by subsistence hunters and their representatives have been addressed by NMFS through the comments that they submitted to this action, which are responded to in this section of the document.

Comment 22: The NSB feels that if BPXA is permitted to conduct seismic after the bowhead hunt, NMFS must impose additional monitoring requirements, as discussed above. Without additional monitoring, it will not be possible for NMFS to determine whether seismic affects the migration in ways that could result in unmitigable adverse impacts to subsistence.

Response: As stated previously in this document, BPXA has stated that it no longer plans to conduct seismic data acquisition after the subsistence bowhead hunt in the Beaufort Sea.

Comment 23: The NVPH states that the MMPA requires NMFS to find that the specified activities covered by an IHA ''will not have an unmitigable adverse impact on the availability of [marine mammal populations] for taking for subsistence uses '' (16 U.S.C. 1371(a)(5)(D)(i)(II)). NMFS is required to make a preliminary determination in its **Federal Register** notice that the proposed activities will not have an unmitigable adverse impact on the availability of marine mammals for subsistence uses. See 16 U.S.C. 1371(a)(5)(D)(iii) (proposed authorizations must be made available for public comment); 50 CFR 216.104(c) (preliminary finding of no unmitigable adverse impact must be proposed for public comment). In its **Federal Register** notice, NMFS makes a preliminary finding that BPXA's proposed surveys will not have an unmitigable adverse impact on the availability of affected populations of marine mammals-including bowhead whales, beluga whales, and seals-for subsistence uses. That finding is arbitrary because NMFS fails to provide the substantive analysis required to support its conclusory finding.

As an initial matter, NMFS should recognize that bowhead and beluga whales and ringed seals, all of which may be harassed as a result of BPXA's activities, each provide unique and irreplaceable subsistence resources that are important to the preservation of our culture. Our communities consume bowhead whale meat, which provides food for the ceremonial Nalukataq and important nutritional values. Bones from bowhead whales are used for carving by Inupiat artists, and bowhead jawbones are used to protect graveyards from animals. Communities along the Beaufort and Chukchi Seas also rely on beluga whales and ringed seals for subsistence. Other subsistence resources cannot be substituted for these important resources.

All of these species move widely throughout the Chukchi and Beaufort Seas, and BPXA's proposed activities may affect subsistence uses of these animals not only in the location of the activities but also elsewhere. In addition, subsistence foods are traditionally shared among communities, so diminishment of subsistence resources in one area-for instance Barrow, Nuiqsut, or Kaktovik-may have a ripple effect throughout other North Slope communities. A threat to these animals and their availability for subsistence is a threat to our culture. Even a slight interference with the availability of these species to communities on the Beaufort and Chukchi Seas will constitute an unmitigable adverse impact to their overall availability for subsistence uses and their unique ability to meet specific subsistence needs in Nuiqsut, Point Hope, and elsewhere.

Response: NMFS believes that it has implemented mitigation measures for conducting seismic surveys to avoid, to the greatest extent practicable, impacts on coastal marine mammals and thereby, the needs of the subsistence communities that depend upon these mammals for sustenance and cultural cohesiveness. For the 2008 season, these mitigation measures are similar to those contained in the CAA signed by BPXA on May 30, 2008, and include black-out periods during subsistence hunts for bowhead and beluga whales, avoidance of transiting in the spring leads, and coastal community communication stations and emergency assistance. BPXA's activities will cease prior to the beginning of the bowhead hunt in the Beaufort Sea. It will also occur at a time of year when little seal subsistence hunting occurs in the project area.

Comment 24: In evaluating the effects of seismic noise on the availability of marine mammals for subsistence uses, NMFS states that BPXA proposes to mitigate impacts to subsistence activities through the negotiation of a CAA among itself, the AEWC, and the Whaling Captains' Associations of the affected North Slope communities, including the NVPH (73 FR 24248, May 2, 2008). This agreement is also supposed to cover impact to subsistence uses of seals. The NSB points out that the CAA does not address potential impacts to seal hunts, however, and NMFS cannot rely on a CAA with AEWC and the village whaling captains to ensure that no unmitigable adverse impacts occur to the subsistence hunt of other marine mammals.

The NVPH believes that by relying on this yet-to-be-completed agreement to mitigate impacts to subsistence, NMFS explicitly defers its determination whether BPXA's activities will have an unmitigable adverse impact on the availability of bowhead whales and seals for subsistence uses until after such a CAA has been negotiated. NMFS does not give any indication how it will assess the sufficiency of a CAA. It states that if no CAA is reached among the parties, NMFS may impose additional mitigation measures in the IHA. It does not identify those mitigation measures. Nevertheless, NMFS issues a preliminary conclusion that seismic activities will not have an unmitigables adverse impact on the subsistence uses of affected marine mammals (73 FR 24253, May 2, 2008). This preliminary conclusion is expressly conditioned on the implementation and effectiveness of restrictions included in a CAA or mitigation measures included in an IHA. NVPH and the NSB both note that absent specification of these restrictions and mitigation measures, NMFS cannot reasonably conclude that they will prove effective. Because it relies on the presumed effectiveness of non-existent

mitigation measures, NMFS' preliminary conclusion is arbitrary and capricious, as NMFS has failed to prescribe measures that will minimize impacts to subsistence.

If NMFS bases its final ''unmitigable adverse impact'' determination for affected marine mammals on conditions imposed in a CAA, or, absent conclusion of a CAA, subsequent mitigation measures in an IHA, it must provide for another public comment period during which the public is able to evaluate such conditions. Otherwise, the agency has effectively deprived the public of the opportunity to comment on this determination.

Response: NMFS understands that the CAA does not address issues related to subsistence hunt of seals and apologizes for this erroneous statement in the proposed IHA notice. However, NMFS feels that BPXA's seismic survey will not have an unmitigable adverse impact on pinniped subsistence hunts in the Arctic region. Ringed seals, the most common pinniped in the project area, are primarily hunted from October through June, outside of the timeframe of the project. Thus, there should be no effect on subsistence harvest of ringed seals from the proposed activity.

BPXA signed a CAA with the AEWC on May 30, 2008. BPXA's activities will not occur during the beluga hunts, and the company agrees to abide by the transit routes to the project site laid out in the CAA. Additionally, BPXA will end seismic shooting by August 25 to avoid impacts on the fall bowhead subsistence hunt in the U.S. Beaufort Sea.

The design of BPXA's proposed surveys is itself a mitigation measure. The location of the project (inside the barrier islands) is in water too shallow to be suitable habitat for most whale species. Additionally, activities will not occur during subsistence hunting of bowheads or belugas. NMFS presented all of this information in its proposed IHA notice. Therefore, additional time for public comment is not warranted.

Comment 25: The NVPH states that BPXA appears not to have complied with the regulatory requirement to include a plan of cooperation (POC) or a description of the measures that will be taken to minimize adverse effects on the availability of marine mammals for subsistence uses. For example, the **Federal Register** notes that BPXA had not even met with the very subsistence communities potentially most directly affected by its activities prior to submitting its IHA application. See 73 FR 24248 (noting two meetings with co-management organizations that took place prior to the submission of the IHA application, but no meetings at all with affected communities such as Nuiqsut or Kaktovik). BPXA also appears to have failed to meet its obligation to provide a ''schedule for meeting with the affected subsistence communities to discuss proposed activities and to resolve potential legal conflicts regarding any aspects of either the operation or the plan of cooperation,'' (50 CFR 216.104(a)(12)(ii)), or to have specified what plans it has to continue to meet with affected communities during its operations in order to resolve conflicts (50 CFR 216.104(a)(12)(iv)). See id. (setting forth no schedule to meet with affected communities; noting only that ''subsequent meetings'' will be held ''as necessary''). BPXA also does not appear to have described the measures it will take to ensure that seismic surveys will not interfere with subsistence whaling and seal hunting, as the regulations require, relying instead on a non-existent, hypothetical CAA. Absent a detailed description, it is impossible for NMFS or Point Hope to actually determine how BPXA intends to reduce subsistence impacts, let alone to assess the adequacy and effectiveness of such measures.

Response: Since publication of the **Federal Register** notice of proposed IHA (73 FR 24236, May 2, 2008), BPXA has submitted an updated list of POC meetings with affected communities. On February 7, 2008, BPXA met with Nuiqsut and Kaktovik whalers in Deadhorse to introduce the proposed 2008 offshore oil and gas activities. On February 28, 2008, BPXA attended the First Annual Programmatic CAA Meeting in Barrow with AEWC commissioners and representatives from the villages. At the Open-water Meeting in Anchorage in April, BPXA presented its project and monitoring and mitigation plans to NMFS, MMS, the AEWC, the NSB, and other members of the public. On May 13, 2008, BPXA met with the NSB DWM to discuss Liberty seismic environmental monitoring plans and concerns. Also, on June 18, 2008, BPXA held two meetings in Nuiqsut to provide an overview of the seismic projects, one with Nuiqsut whaling captains and one with both Nuiqsut whaling captains and community representatives. Responses to previous comments in this document address the concern that BPXA has not described the measures it will take to avoid interfering with subsistence hunts in the Beaufort Sea.

Mitigation Concerns

Comment 26: CBD states that the MMPA authorizes NMFS to issue a small take authorization only if it can first find that it has required adequate monitoring of such taking and all methods and means of ensuring the least practicable impact have been adopted (16 U.S.C. 1371(a)(5)(D)(ii)(I)). The proposed IHA largely ignores this statutory requirement. In fact, while the proposed IHA lists various monitoring measures, it contains virtually nothing by way of mitigation measures. The specific deficiencies of the ''standard'' MMS mitigation measures as outlined in the 2006 PEA are described in detail in our NEPA comments, incorporated by reference, and are not repeated here. The problems with the mitigation measures as explained for NEPA purposes are even more compelling with regard to the substantive standards of the MMPA. Because the MMPA explicitly requires that ''means effecting the least practicable impact'' on a species, stock, or habitat be included, an IHA must explain why measures that would reduce the impact on a species were not chosen (i.e., why they were not ''practicable''). Neither the proposed IHA, BPXA's application, the 2006 PEA, or the 2007 DPEIS attempts to do this.

Response: The proposed IHA outlined several mitigation, monitoring, and reporting requirements to be implemented during the Beaufort Sea survey. By way of mitigation, the Notice of Proposed IHA (73 FR 24236, May 2, 2008) described the following actions to be undertaken by BPXA including: speed and course alterations; power-downs and shutdowns when marine mammals are sighted just outside or in the specified safety zones; and ramp-up procedures. Speed or course alteration helps to keep marine mammals out of the 180 or 190 dB safety zones. Additionally, power-down and shutdown procedures are used to prevent marine mammals from exposure to received levels that could potentially cause injury. Ramping-up provides a ''warning'' to marine mammals in the vicinity of the airguns, providing them time to leave the area and thus avoid any potential injury or impairment of hearing capabilities. Because these mitigation measures will be included in the IHA to BPXA, no marine mammal injury or mortality is anticipated. Numbers of individuals of all species taken are expected to be small (relative to stock or population size), and the take is anticipated to have a negligible impact on the affected species or stock.

Additionally, the survey design itself has been created to mitigate the effects to the lowest level practicable. The total geographic area for which seismic data are required has been minimized by re-analyzing and re-interpreting existing data, thereby reducing the total area

from approximately 220 km² (85 mi²) to approximately 91 km² (35 mi²). Also, the total airgun discharge volume has been reduced to the minimum volume needed to obtain the required data. Lastly, two seismic source vessels will be used simultaneously (alternating their shots) to minimize the total survey period. BPXA has also agreed to complete all of its seismic acquisition by August 25, prior to the westward migration of the bowhead whales across the Beaufort and the start of the subsistence hunt of these animals. Beluga whales are not hunted in the Liberty Prospect area during the time of the BPXA survey. Additionally, although ringed seals are available to be taken by subsistence hunters year-round, the seismic survey will not occur during the primary period when this species is typically harvested (October through June). For these reasons, NMFS believes that it has required all methods and means necessary to ensure the least practicable impact on the affected species or stocks. CBD's comments on the 2006 PEA and the responses to those comments were addressed in Appendix D of the PEA and are not repeated here.

Comment 27: CBD states that while NMFS has not performed any analysis of why additional mitigation measures are not ''practicable,'' the proposed IHA contains information to suggest that many such measures are in fact practicable. For example, in 2006, NMFS required monitoring of a 120–dB safety zone for bowhead cow/calf pairs and monitoring of a 160–dB safety zone for large groups of bowhead and gray whales (greater than 12 individuals). The BPXA IHA is silent as to the applicability of these safety zones. Moreover, the fact that a 120–dB safety zone is possible for aggregations of bowheads means that such a zone is also possible for other marine mammals such as belugas which are also subject to disturbance at similar sound levels. The failure to require such, or at least analyze it, violates the MMPA. The NSB DWM adds that the 120–dB zone must be considered for bowheads and possibly belugas if surveys are to occur in September and that sound source verification tests should empirically measure, and not extrapolate, the distance to which BPXA's seismic sounds for Liberty attenuate to 120 dB.

Response: NMFS has considered a monitoring and shutdown requirement for the 160–dB and 120–dB safety zones and has determined they would not be applicable to the BPXA survey. These measures are only required if activities occur after August 25 in the Alaskan Beaufort Sea. NMFS has found the 160–dB safety zone to be practicable in the Chukchi Sea. Therefore, IHA holders operating in the Chukchi Sea will be required to monitor and shutdown within the 160–dB safety radius if an aggregation of 12 or more bowhead or gray whales that appear to be engaged in a non-migratory, significant biological behavior is observed during a monitoring program. Seismic activity will not recommence until two consecutive surveys indicate the animals are no longer present within the 160–dB zone. While aerial surveys out to the 120–dB will be required in the Beaufort Sea for activities occurring after August 25, NMFS has found that such surveys are impractical in the Chukchi Sea because of the lack of adequate landing facilities and the prevalence of fog and other inclement weather in that area, thereby resulting in safety concerns.

Also, because the Liberty seismic survey will take place shoreward of the barrier islands in very shallow waters from 1–9.1 m (3–30 ft; where high seismic propagation loss is expected), few bowhead whales are likely to occur in the project area. The distance of received levels that might elicit avoidance will likely not (or barely) reach the main migration corridor and then only through the inter-island passages. BPXA's activities will cease before the beginning of the fall bowhead migration across the U.S. Beaufort Sea. Additionally, gray whales have not commonly or consistently been seen in the area of the Beaufort Sea where BPXA will conduct its activities over the last 25–30 years.

Comment 28: The MMC recommends that NMFS issue the IHA provided that NMFS require: (a) the applicant to implement all practicable monitoring and mitigation measures to protect bowhead whales and other marine mammal species from disturbance and that ramp-up be allowed only when the entire area encompassed by the safety zones is clearly visible for a sufficiently long period to ensure that marine mammals are not present; and (b) operations to be suspended immediately if a dead or seriously injured marine mammal is found in the vicinity of the operations and if that death or injury could be attributable to the applicant's activities. Any suspension should remain in place until NMFS: (1) has reviewed the situation and determined that further deaths or serious injuries are unlikely to occur; or (2) has issued regulations authorizing such takes under section 101(a)(5)(A) of the MMPA.

Response: NMFS concurs with the MMC's recommendation and extends the requirement to any type of injury, not just serious injury, if it could be attributable to BPXA's seismic survey activities. A condition to this effect has been included in the IHA. Ramp-up will not be permitted unless the entire area encompassed by the safety zones has been clearly visible for at least 30 min prior to start-up of the airguns.

Monitoring Concerns

Comment 29: CBD states that MMOs cannot effectively detect 100 percent of the marine mammals that may enter the safety zones. NMFS allows seismic vessels to operate airguns during periods of darkness, but does not require MMOs to monitor the exclusion zones during nighttime operations except when starting airguns at night or if the airgun was powered down due to marine mammal presence the preceding day. Even during the day, visually detecting marine mammals from the deck of a seismic vessel presents challenges and may be of limited effectiveness due to glare, fog, rough seas, the small size of animals such as seals, and the large proportion of time that animals spend submerged. CBD feels that there is no documentation to prove that BPXA's operations will more effectively monitor exclusion zones than in 2006 and 2007. Therefore, marine mammals will likely be exposed to sound levels that could result in permanent hearing loss and therefore serious injury. As such, because BPXA's proposed activities ''have the potential to result in serious injury or mortality'' to marine mammals, NMFS cannot lawfully issue the requested IHA. Moreover, NMFS cannot authorize some take (i.e., harassment) if other unauthorized take (i.e., serious injury or mortality) may also occur. However, even if an IHA were the appropriate vehicle to authorize take for BPXA's planned activities, because the proposed IHA is inconsistent with the statutory requirements for issuance, it cannot lawfully be granted by NMFS.

Response: The seismic vessels will be traveling at speeds of about 1–5 knots (1.9–9.3 km/hr). With a 180–dB safety range of 880 m (0.55 mi) at full strength at 4 m (13 ft) tow depth, a vessel will have moved out of the safety zone within a few minutes. As a result, during underway seismic operations, MMOs are instructed to concentrate on the area ahead of the vessel, not behind the vessel where marine mammals would need to be voluntarily swimming towards the vessel to enter the 180–dB zone. In fact, in some of NMFS' IHAs issued for scientific seismic operations, shutdown is not required for marine mammals that approach the vessel from the side or stern in order to ride the bow

wave or rub on the seismic streamers deployed from the stern (and near the airgun array) as some scientists consider this a voluntary action on the part of an animal that is not being harassed or injured by seismic noise. While NMFS concurs that shutdowns are not likely warranted for these voluntary approaches, in the Arctic Ocean, all seismic surveys are shutdown or powered down for all marine mammal close approaches. Also, in all seismic IHAs, including BPXA's IHA, NMFS requires that the safety zone be monitored for 30 min prior to beginning ramp-up to ensure that no marine mammals are present within the safety zones. Implementation of ramp-up is required because it is presumed it would allow marine mammals to become aware of the approaching vessel and move away from the noise, if they find the noise annoying.

Total darkness will not set in during BPXA's survey. During the first two weeks of data acquisition, there will be 24 hrs of daylight. However, during times of impaired light, MMOs will be equipped with night vision devices. During poor visibility conditions, if the entire safety zone is not visible for the entire 30 min pre-ramp-up period, operations cannot begin.

NMFS believes that an IHA is the proper authorization required to cover BPXA's survey. As described in other responses to comments in this document, NMFS does not believe that there is a risk of serious injury or mortality from these activities. The monitoring reports from 2006 and 2007 do not note any instances of serious injury or mortality. Additionally, NMFS feels it has met all of the requirements of section 101(a)(5)(D) of the MMPA (as described throughout this document) and therefore can issue an IHA to BPXA for seismic operations in 2008.

Comment 30: The NSB and CBD states that with regard to nighttime and poor visibility conditions, BPXA proposes essentially no limitations on operations, even though the likelihood of observers seeing marine mammals in such conditions is very low. The obvious solution, not analyzed by BPXA or NMFS, is to simply prohibit seismic surveying when conditions prevent observers for detecting all marine mammals in the safety zone. CBD also states that in its treatment of passive acoustic monitoring (PAM), NMFS and BPXA are also deficient. While past IHAs have required PAM, this IHA completely ignores even discussing the possibility of using such monitoring. Additional mitigation measures that are clearly ''practicable'' are included in our NEPA comments on the PEA and DPEIS and incorporated by reference here.

Response: The time of year when BPXA will be conducting its survey is a time when total darkness does not occur. During the first 2 weeks of data acquisition, it will be light 24 hr/day. Beginning around July 29, nautical twilight will begin to occur for short periods of time each day, with the amount of time that twilight occurs increasing by about 15–30 minutes each day. Nautical twilight is defined as the sun being approximately 12° below the horizon. At the beginning or end of nautical twilight, under good atmospheric conditions and in the absence of other illumination, general outlines of ground objects may be distinguishable, but detailed outdoor operations are not possible, and the horizon is indistinct. During periods of impaired light or fog, operations will not be allowed to resume after a full shutdown if the entire 180–dB safety radius cannot be monitored for a full 30–min period. Additionally, night vision devices will be onboard each source vessel. BPXA and NMFS considered the use of PAM for this project. However, since cetaceans are not expected to be present in the shallow water environment, it was determined not to be practical to require such monitoring. It should be noted, however, that every fall, BPXA deploys Directional Autonomous Seafloor Acoustic Recorders near its Northstar facility in the Beaufort Sea, which is slightly westward of this survey to record bowhead whale calls during the fall migration. Results of those recordings are available in the Northstar reports and can be found on the NMFS PR website (see **ADDRESSES** for availability).

Comment 31: The NSB DWM notes that in its application, BPXA states MMOs ''on board of the vessels play a key role in monitoring these safety zones and implementation of mitigation measures.'' The 190 and 180 dB safety zones (at an airgun depth of 4 m, 13 ft) are 390 m and 880 m (0.24 mi and 0.55 mi), respectively. The NSB DWM is concerned given that BPXA is using relatively small vessels for conducting the seismic surveys, it is not clear that the MMOs will be observing from a high enough position to adequately clear the safety zones, especially in inclement weather or darkness. Additional information is needed regarding the adequacy of MMOs for clearing safety zones, especially with the relatively small safety zones anticipated for these seismic surveys.

BPXA has considered the limitation of MMOs in implementing mitigation measures to prevent Level A takes. BPXA has not planned on any additional monitoring efforts, however. If seismic surveys are going to extend into September, when darkness and inclement weather are more common than in August, there should be additional monitoring efforts to avoid Level A takes and to evaluate numbers of Level B takes of marine mammals. Aerial surveys or acoustic monitoring would be suitable means to this additional monitoring.

Response: Bridge height for the Peregrine is 4.5 m (14.8 ft) and 3.7 m (12.1 ft) for the Miss Dianne. In addition to these heights, one also needs to take into account the height of the MMO (BPXA assumes an average height of 1.7 m, 5.6 ft). From these heights, MMOs are able to clear the 180–dB and 190–dB safety zones. Under conditions of low or poor visibility, the measures mentioned in previous responses will be required. Additionally, night vision devices will be available on all source vessels. Surveys will not extend into September, so there would be no need for additional monitoring efforts.

Comment 32: The NSB is concerned that if the seismic surveys do occur in September, bowhead whales have a much greater chance of being exposed to seismic sounds, and BPXA must increase its proposed monitoring program. The NSB and NSB DWM state that aerial surveys and acoustic monitoring programs will be needed if BPXA resumes its seismic surveys in September. The increased monitoring should include: (1) Aerial surveys at least 3 times per week, both inshore and offshore of the barrier islands; (2) enhanced acoustic monitoring, especially in areas offshore of the barrier islands; and (3) increased MMO coverage. Without additional monitoring plans for September and October, the NSB opposes an IHA that permits seismic activity during that time period. The NSB DWM notes that it is not clear where BPXA will deploy acoustic recorders. Further information is needed. If seismic surveys are to extend into September, hydrophones should at least be deployed to the west and east of McClure Islands and shoreward of the barrier islands. The NSB DWM also believes that MMOs should be deployed to vessels other than the source vessels if surveys continue into the fall migration period to help avoid Level A takes and to provide information about how many marine mammals may be affected in the disturbance zones (i.e., 120- and 160–dB zones).

Response: As stated previously in this **Federal Register** notice, BPXA has

stated that it no longer plans to conduct seismic data acquisition in September and October.

Comment 33: The NVPH notes that NMFS regulations require that an IHA set forth ''requirements for the independent peer-review of proposed monitoring plans where the proposed activity may affect the availability of a species or stock for taking for subsistence uses'' (50 CFR 216.107(a)(3)). The proposed IHA fails to provide for peer review of BPXA's proposed monitoring plans. It states only that BPXA participated in the ''open water meeting'' in Anchorage in April. This does not suffice to meet the independent peer review requirement for BPXA's monitoring plans. Such peer review, by independent, objective reviewers is both necessary and required.

Response: In order for the independent peer-review of Arctic area activity monitoring plans, it must be conducted in an open and timely process. Review by an independent organization, such as the National Academy of Sciences, would be costly (at least $500,000), take at least a year to complete, would limit NMFS, FWS, MMS, and stakeholder input, would likely provide for an inflexible, multi-year monitoring plan (e.g., any modifications may require reconvening the Committee), and may not address issues of mutual concern (degree of bowhead westward migration, etc.). As a result, NMFS believes that independent peer-review of monitoring plans can be conducted via two means. First, the monitoring plans are made public and available for review by scientists and members of the public in addition to scientists from the NSB, NMFS, and the USFWS. In accordance with the MMPA, the MMC's Committee of Scientific Advisors reviews all IHA applications, including the monitoring plans. Second, monitoring plans and the results of previous monitoring are reviewed once or twice annually at public meetings held with the industry, the AEWC, the NSB, Federal agencies, and the public. BPXA's mitigation and monitoring plan was reviewed by scientists and stakeholders at a meeting in Anchorage between April 14, 2008, and April 16, 2008, and by the public between May 2, 2008 (73 FR 24236) and June 2, 2008.

Cumulative Impact Concerns

Comment 34: Oceana and the Ocean Conservancy are concerned that oil and gas activities may have substantial negative effects on marine mammals and other Arctic species. Oceana and the Ocean Conservancy further state that there has never been a comprehensive evaluation of the cumulative effects of seismic activities in the Arctic. Oceana and the Ocean Conservancy request that in light of the dramatic effects of climate change in the Arctic, NMFS must not approve further seismic activities without such a comprehensive evaluation.

Response: While it is possible that substantial negative effects on marine mammals and other Arctic species could occur from oil and gas activities, NMFS believes that proactive conservation measures for protected species, such as NMFS' initiation of status reviews of ice seals and the recent USFWS ESA-listing of polar bears, coupled with prudent natural resources management and regulations on industrial activities by Federal agencies would reduce these adverse impacts to biologically non-significant or negligible levels. In addition, monitoring and mitigation measures required for conducting particular industrial activities would further reduce and minimize such negative effects to marine mammal species and stocks. Long term research and monitoring results on ice seals in Alaska's North Slope have shown that effects of oil and gas development on local distribution of seals and seal lairs are no more than slight and are small relative to the effects of natural environmental factors (Moulton *et al.*, 2005; Williams *et al.*, 2006).

NMFS does not agree with Oceana's and Ocean Conservancy's statement that there has never been a comprehensive evaluation of the cumulative effects of seismic activities in the Arctic. The MMS 2006 PEA, NMFS 2007 SEA, 2007 MMS/NMFS DPEIS, and NMFS 2008 SEA for the proposed issuance of IHAs for five seismic survey and shallow hazard and site clearance survey activities for the 2008 open water season all provide comprehensive evaluation of the cumulative effects of seismic activities in the Arctic. In issuing the IHA to BPXA for its proposed OBC seismic survey in the Beaufort Sea, NMFS has conducted extensive environmental reviews.

Comment 35: The MMC recommends that NMFS, together with the applicant and other appropriate agencies and organizations, develop a broad-based population monitoring and impact assessment program to ensure that these activities, in combination with other risk factors, are not individually or cumulatively having any significant adverse population-level effects on marine mammals or having an unmitigable adverse effect on the availability of marine mammals for subsistence uses by Alaska Natives. Such a monitoring program should focus initially on the need to collect adequate baseline information to allow for future analyses of effects.

As the MMC has noted in previous letters to NMFS, the NRC (2003) report *Cumulative Environmental Effects of Oil and Gas Activities on Alaska's North Slope* states that the predicted rate of climate change in the Beaufort Sea region may, at some point, have more than a negligible impact on marine mammal populations, particularly when combined with the effects of oil and gas operations and other human activities that are likely to be initiated or to increase in Arctic regions. The MMC therefore questions whether there is sufficient basis for concluding that the cumulative effects of the proposed activities, coupled with past, ongoing, and planned activities in the Beaufort and Chukchi Seas, will be negligible for bowhead whales and other marine mammals and will not have an unmitigable adverse impact on their availability to Alaska Natives for subsistence use.

Response: The report *Cumulative Environmental Effects of Oil and Gas Activities on Alaska's North Slope* (Report) released by the National Academy of Science lists industrial noise and oil spills as major impacts to marine mammals from oil and gas development. So far, the prevalent human induced mortalities on marine mammals (bowhead whales, seals, and polar bears) in this region are from subsistence hunting. The Report further predicts that ''if climate warming and substantial oil spills did not occur, cumulative effects on ringed seals and polar bears in the next 25 years would likely be minor and not accumulate''. In its findings, the Report concludes that ''industrial activity in marine waters of the Beaufort Sea has been limited and sporadic and likely has not caused serious accumulating effects on ringed seals or polar bears≥; and ''careful mitigation can help to reduce the effects of North Slope oil and gas development and their accumulation, especially if there is no major oil spill''. The proposed activity would have no potential for an oil spill. It is also highly unlikely given the mitigation and monitoring measures required in the IHA and the distribution of marine mammals during the survey activity period that injury or mortality of marine mammals would occur as a result of BPXA's seismic survey.

A description of the monitoring program submitted by BPXA was provided in BPXA's application, outlined in the **Federal Register** notice

of the proposed IHA (73 FR 24236, May 2, 2008), and posted on the NMFS PR IHA webpage. As a result of a dialogue on monitoring by scientists and stakeholders attending NMFS' public meetings in Anchorage in April, 2006, October, 2006, and April, 2007, the industry has expanded its monitoring program in order to fulfill its responsibilities under the MMPA. For the third year, industry participants have included a marine mammal research component designed to provide baseline data on marine mammals for future operations planning. A description of this research is provided later in this document (see ''Joint Industry Program'' section). Scientists are continuing discussions to ensure that the research effort obtains the best scientific information possible. Finally, it should be noted that this far-field monitoring program follows the guidance of the MMC's recommended approach for monitoring seismic activities in the Arctic (Hofman and Swartz, 1991), that additional research might be warranted when impacts to marine mammals would not be detectable as a result of vessel observation programs.

Additionally, although not required as part of the IHA issued by NMFS to BPXA, at the request of the NSB, BPXA has agreed to conduct three fish related studies in the proposed project area. First, BPXA will conduct a literature review on the effects of airgun sounds on fish and lower-level animals, including larval fish and invertebrates. Secondly, BPXA will sample behind the operation seismic airgun survey vessels to gather qualitative data on fish mortality. Lastly, BPXA has agreed to analyze catch-per-unit-effort data from fyke net in the Endicott area to look for a ''seismic effect.'' These studies will aid in collecting baseline ecosystem data in Foggy Island Bay.

ESA Concerns

Comment 36: CBD states that the proposed IHA will affect, at a minimum, three endangered species, the bowhead and humpback whales and the polar bear. As a consequence, NMFS must engage in consultation under Section 7 of the ESA prior to issuing the IHA. Previous recent biological opinions for industrial activities in the Arctic (e.g., the 2006 Arctic Regional Biological Opinion (ARBO)) have suffered from inadequate descriptions of the proposed action, inadequate descriptions of the status of the species, inadequate descriptions of the environmental baseline, inadequate descriptions of the effects of the action, inadequate analysis of cumulative effects, and inadequate descriptions and analysis of proposed mitigation. We hope NMFS performs the full analysis required by law and avoids these problems in its consultation for the proposed IHA.

Response: Under section 7 of the ESA, NMFS has completed consultation with the MMS on the issuance of seismic permits for offshore oil and gas activities in the Beaufort and Chukchi seas. In a Biological Opinion issued on June 16, 2006, NMFS concluded that the issuance of seismic survey permits by MMS and the issuance of the associated IHAs for seismic surveys are not likely to jeopardize the continued existence of threatened or endangered species (specifically the bowhead whale) under the jurisdiction of NMFS or destroy or adversely modify any designated critical habitat. The 2006 Biological Opinion takes into consideration all oil and gas related activities that are reasonably likely to occur, including exploratory (but not production) oil drilling activities.

NMFS has indicated that the findings in the 2006 ARBO are still relevant to BPXA's 2008 open water seismic survey planned for the Liberty Prospect, Foggy Island Bay, Beaufort Sea. MMS and NMFS are conducting a section 7 consultation for 2008 activities in the Chukchi Sea only, as there is evidence that humpback and fin whales may be affected by seismic surveys in 2008. However, since these species are not likely to occur in BPXA's project area, reinitiation of consultation for this particular IHA is not warranted. In addition, NMFS has issued an Incidental Take Statement under this Biological Opinion which contains reasonable and prudent measures with implementing terms and conditions to minimize the effects of take of bowhead whales. Regarding the polar bear, MMS has contacted the USFWS about conducting a section 7 consultation.

Comment 37: Additionally, CBD states, NMFS may authorize incidental take of the listed marine mammals under the ESA pursuant to Section 7(b)(4) of the ESA, but only where such take occurs while ''carrying out an otherwise lawful activity.'' To be ''lawful,'' such activities must ''meet all State and Federal legal requirements except for the prohibition against taking in section 9 of the ESA''. As discussed above, BPXA's proposed activities violate the MMPA and NEPA and therefore are ''not otherwise lawful.'' Any take authorization for listed marine mammals would, therefore, violate the ESA, as well as these other statutes.

Response: As noted in this document, NMFS has made the necessary determinations under the MMPA, the ESA, and NEPA regarding the incidental harassment of marine mammals by BPXA while it is conducting activities permitted legally under MMS' jurisdiction.

NEPA Concerns

Comment 38: The NSB, NVPH, and CBD state that NEPA requires Federal agencies to prepare an EIS for all ''major Federal actions significantly affecting the quality of the human environment.'' In the notice of proposed IHA, NMFS cites the 2006 PEA and the 2007 DPEIS. As explained in our comment letters on these two documents (incorporated by reference), neither of these documents satisfy NMFS' NEPA obligation. The 2006 PEA explicitly limited its scope to the 2006 seismic season. Additional seismic work cannot be authorized without further NEPA analysis of the cumulative impacts of increasing activity offshore in the Arctic Ocean.

The monitoring reports from 2006 and 2007 seismic testing must be considered in any NEPA analysis for further seismic testing. Moreover, these reports indicate that the 120 dB and 160 dB zones from seismic surveys were much larger than anticipated or analyzed in the PEA. As such, the analysis of the PEA is simply inaccurate and underestimates the actual impacts from seismic activities. Also, in 2007, significant bowhead feeding activity occurred in Camden Bay, rendering the PEA's analyses of important bowhead feeding areas inadequate and inaccurate. Additionally, sea ice in 2007 retreated far beyond that predicted or analyzed in the PEA, rendering any discussion of cumulative impacts of seismic activities in the context of climate change horribly out of date.

Moreover, even if the EA was not of limited scope and out of date, the proposed surveys threaten potentially significant impacts to the environment, and must be considered in a full EIS. (See 42 U.S.C. 5 4332(2)(c); *Idaho Sporting Cong* v. *Thomas*, 137 F.3d 1146, 1149 (9th Cir. 1998)). ''[A]n EIS must be prepared if ''substantial questions are raised as to whether a project . . . may cause significant degradation of some human environmental factor'' *Idaho Sporting Cong.*, 137 F.3d at 1149). As explained in our comment letter of May 10, 2006, on the PEA (incorporated by reference), seismic surveys trigger several of the significance criteria enumerated in NEPA regulations. Additionally, the ''significance thresholds'' in the PEA are, as explained in our comment letters, arbitrary and unlawful. Moreover, the 120 dB and 160 dB safety zones that NMFS relied upon to avoid

a finding of significance in the 2006 PEA are not part of the current proposal and cannot in anyway support a finding of no significant impact (FONSI). Finally, where, as here, a proposed action may have cumulatively significant impacts, an EIS must be prepared, and cannot be avoided by breaking a program down into multiple actions. See *Blue Mountains Biodiversity Project* v. *Blackwood*, 161 F.3d 1208, 1215 (9th Cir. 1998); *Kern* v. *Bureau of Land Mgmt.*, 284 F.3d 1062, 1078 (9th Cir. 2002).

Response: NMFS prepared a Final SEA to analyze further the effects of BPXA's (and other companies') proposed open-water seismic survey activities for the 2008 season. NMFS has incorporated by reference the analyses contained in the MMS 2006 Final PEA and has also relied in part on analyses contained in the DPEIS submitted for public comment on March 30, 2007.

The 2006 PEA analyzed a broad scope of proposed seismic activities in the Arctic Ocean. In fact, the PEA assessed the effects of multiple, ongoing seismic surveys (up to 8 surveys) in the Beaufort and Chukchi Seas for the 2006 season. Although BPXA's proposed activity for this season was not explicitly identified in the 2006 PEA, the PEA did contemplate that future seismic activity, such as BPXA's, could occur. NMFS believes the range of alternatives and environmental effects considered in the 2006 PEA, combined with NMFS' SEA for the 2008 season are sufficient to meet the agency's NEPA responsibilities. In addition, the 2008 SEA includes new information obtained since the 2006 Final PEA was issued, including updated information on cumulative impacts. NMFS also includes a new section in the 2008 SEA, which provides a review of the 2006 and 2007 monitoring reports. As a result of this review and analysis, NMFS has determined that it was not necessary to prepare an EIS for the issuance of an IHA to BPXA in 2008 for seismic activity in the Beaufort Sea but that preparation of an SEA and issuance of a FONSI were sufficient under NEPA.

NMFS has determined that it is not necessary for BPXA to monitor a 120–dB safety radius, as stated in several of the preceding responses. BPXA will establish a 160–dB safety radius to monitor for Level B harassment exposures; however, no serious injury or mortality is expected of any marine mammal species that enters this radius. Because BPXA will be conducting its activities in shallow water, inshore of the barrier islands, sound is not expected to propagate as far as it would outside the islands. The islands are also expected to absorb the majority of the sound produced by the airguns.

Comment 39: The NSB and CBD state that NMFS also appears to rely on the NEPA analysis in the DPEIS in clear violation of NEPA law. NEPA requires agencies to prepare a draft EIS, consider public and other agency comments, respond to these comments in its final EIS, and wait 60 days before issuing a final decision. Before the record of decision has been issued on the final PEIS, NMFS cannot authorize BPXA's proposed seismic surveys. Here, the very purpose of the PEIS process is to consider seismic surveys in the Chukchi and Beaufort Seas for the years 2008 and beyond. NMFS cannot authorize such activities before the NEPA process is complete. See *Metcalf* v. *Daley*, 214 F.3d 1135, 1143–44 (9th Cir. 2000). In sum, NMFS seems to either be relying on a NEPA document that is not just inadequate, but which by its very terms only covers activities from two years ago (the 2006 PEA), or one which is nowhere near complete (the 2007 DPEIS). Neither of these is sufficient to meet NMFS' NEPA obligations under the law. The NSB believes that NMFS may not avoid the requirements of NEPA by only completing a SEA this season.

Response: See previous responses on this concern. Contrary to the NSB's and CBD's statement, NMFS relied on information contained in the MMS 2006 Final PEA, as updated by NMFS' 2008 SEA for making its determinations under NEPA and that the DPEIS was not the underlying document to support NMFS' issuance of BPXA's IHA. NMFS merely relied upon specific pieces of information and analyses contained in the DPEIS to assist in preparing the SEA. It is NMFS' intention that the PEIS currently being developed will be used to support, in whole, or in part, future MMPA actions relating to oil and gas exploration in the Arctic Ocean. Additionally, NMFS believes that a SEA is the appropriate NEPA analysis for this season as the amount of activity for 2008 is less than what was analyzed in the 2006 PEA.

Comment 40: The NVPH states that because NMFS has not yet made a copy of its SEA available to the public, it is impossible to comment fully on the agency's NEPA analysis of BPXA's shallow hazard surveys. Nevertheless, we hereby incorporate by reference in their entirety the following comments that identify the flaws with the analysis provided in the PEA and explain why it is inappropriate for NMFS to continue to rely on that document: (i) our comments on NMFS proposed IHA for Arctic Slope Regional Corporation Energy Services (AES), submitted on May 28, 2008; (ii) our comment on the 2006 PEA, submitted on May 24, 2006; and (iii) the comments submitted to NMFS by the NRDC on May 10, 2006. As these comments recount, the analysis in the PEA understates the risk of significant impacts to bowhead whales and all marine mammals, fails to provide site-specific analysis, fails to evaluate activities beyond 2006, and uses arbitrary significance criteria for non-endangered marine mammals, among many other failures.

Response: The NVPH alleges that NMFS violated NEPA's standards when it failed to circulate the draft SEA for public comment prior to finalizing the SEA. Neither NEPA, nor the Council on Environmental Quality's regulations explicitly require circulation of a draft EA for public comment prior to finalizing the EA. The Federal courts have upheld this conclusion, and in one recent case, the Ninth Circuit squarely addressed the question of public involvement in the development of an EA. In *Bering Strait Citizens for Responsible Resource Development* v. *U.S. Army Corps of Engineers* (9th Cir., 2008), the court held that the circulation of a draft EA is not required in every case; rather, Federal agencies should strive to involve the public in the decision-making process by providing as much environmental information as is practicable prior to completion of the EA so that the public has a sufficient opportunity to weigh in on issues pertinent to the agency's decision-making process. In the case of BPXA's MMPA IHA request, NMFS involved the public in the decision-making process by distributing BPXA's IHA application for a 30–day notice and comment period. The IHA application and NMFS' **Federal Register** notice of the proposed IHA (73 FR 24236, May 2, 2008) contained information relating to the project. For example, the application includes a project description, its location, environmental matters such as species and habitat to be affected by project construction, and measures designed to minimize adverse impacts to the environment and the availability of affected species or stocks for subsistence uses. As documented herein, NMFS considered all of the public comments received on the IHA application, in particular issues related to the availability of marine mammals for subsistence uses and means for effecting the least practicable impact on the availability of marine mammal populations for subsistence uses and addressed many of the public's environmental concerns in the final

SEA. NMFS also incorporated, where appropriate, measures to reduce impacts to marine mammals resulting from the surveys. As NMFS stated earlier, the final SEA will be made available to the public upon its completion.

NMFS responded to comments submitted regarding the 2006 PEA in Appendix D of that document and will not repeat those comments and responses here. The comments submitted by the NVPH for the AES proposed IHA regarding NEPA issues are addressed in comments 41–43 in this document.

Comment 41: The NVPH believes that the analysis in the PEA understates the risk of significant impacts to bowhead whales and all marine mammals. It assumes the source vessels-both 3D seismic and shallow hazard vessels-will ensonify much smaller zones than those which have been subsequently measured in the field. In practice, seismic airgun noise has propagated far greater distances than NMFS anticipated in the PEA and thus authorized activity presumably has displaced marine mammals from far more habitat, including important feeding and resting habitats, than NMFS' analysis in the PEA anticipated. See, e.g., PEA Figures III.F–10 and III.F–11 (assuming 20 km avoidance of surveys by bowhead whales). Based on the propagation actually measured in 2006 and 2007, the impacts of a single 3D seismic survey are two to three times as large as NMFS anticipated or more. The impacts of a single shallow hazard survey are comparable to the impacts NMFS anticipated from a single 2D or 3D seismic survey. Before authorizing further seismic surveying activity or shallow hazard surveys in the Arctic Ocean, NMFS must complete the PEIS that it began in 2006 to evaluate the potentially significant impacts of such activities.

Response: The subject PEA was written by MMS, not NMFS. However, NMFS was a cooperating agency under NEPA in its preparation. As noted in your cited part in the PEA, 20 km (12.4 mi) was used for illustrative purposes in an exercise to estimate the impact of four seismic vessels operating within 24 km (15 mi) of each other. To do so, MMS created a box (that was moveable along the Beaufort Sea coast) to make these estimates. NMFS believes that the use of 20 km (12.4 mi) remains the best information available at this time and was the radius agreed to by participants at the 2001 Arctic Open-water Noise Peer Review Workshop in Seattle, Washington. This estimate is based on the results from the 1998 aerial survey (as supplemented by data from earlier years) as reported in Miller *et al.* (1999). In 1998, bowhead whales below the water surface at a distance of 20 km (12.4 mi) from an airgun array received pulses of about 117–135 dB re 1 Pa rms, depending upon propagation. Corresponding levels at 30 km (18.6 mi) were about 107–126 dB re 1 μ Pa rms. Miller *et al.* (1999) surmise that deflection may have begun about 35 km (21.7 mi) to the east of the seismic operations, but did not provide SPL measurements to that distance, and noted that sound propagation has not been studied as extensively eastward in the alongshore direction, as it has northward, in the offshore direction. Therefore, while this single year of data analysis indicates that bowhead whales may make minor deflections in swimming direction at a distance of 30–35 km (18.6–21.7 mi), there is no indication that the SPL where deflection first begins is at 120 dB, it could be at another SPL lower or higher than 120 dB. Miller *et al.* (1999) also note that the received levels at 20–30 km (12.4–18.6 mi) were considerably lower in 1998 than have previously been shown to elicit avoidance in bowheads exposed to seismic pulses. However, the seismic airgun array used in 1998 was larger than the ones used in 1996 and 1997. Therefore, NMFS believes that it cannot scientifically support adopting any single SPL value below 160 dB and apply it across the board for all species and in all circumstances. For this reason, until more data collection and analyses are conducted on impacts of anthropogenic noise (principally from seismic) on marine mammals in the Beaufort and Chukchi Seas, NMFS will continue to use 20 km (12.4 mi) as the radius for estimating impacts on bowhead whales during the fall migration period.

In regards to the NVPH statement, ''The impacts of a single shallow hazard survey are comparable to the impacts NMFS anticipated from a single 2D or 3D seismic survey,'' NMFS notes that BPXA's seismic program is not a shallow hazards survey but a 3D seismic survey conducted in shallow water, inside the barrier islands. This OBC survey is similar to those conducted for BPXA by Western Geophysical in the late 1990s at the nearby Northstar Prospect (see Richardson, W.J. (ed) 1997, 1998, 1999, 2000a, and 2000b for acoustic measurements and marine mammal impact assessments from OBC surveys during 1996 through 2000, respectively). As a result of these previous acoustic propagation measurements, NMFS believes that the sound propagation characteristics for the 880 in^3 airgun array proposed by BPXA for its 2008 OBC survey at the Liberty Prospect, has been accurately calculated for the 190 dB, 180 dB and 160 dB (rms) zones, as shown in Table 3 of BPXA's IHA application and Table 1 below. Also, it should be recognized that since BPXA will not be operating after August 25 (prior to the start of the bowhead whale westward migration), ''exposure'' estimates to the 120–dB isopleth are unnecessary, as no animals are presumed to be affected to that distance. In addition, in compliance with the terms and conditions of its IHA, BPXA will conduct a sound source verification test prior to conducting its OBC survey to ensure that the correct distances are applied to the safety and monitoring zones (see ''Mitigation Measures'' section later in this document).

Comment 42: The NVPH states that the PEA fails to provide site-specific analysis. Thus, in order to reduce the likelihood of significant impacts, NMFS has imposed 160–dB and 120–dB safety zones when authorizing surveys pursuant to the PEA. At a minimum, it must do the same for BPXA's surveys but with the modifications to the safety zones discussed above.

Response: The SEA prepared for the 2008 open-water season activities provides site specific information for the various projects, in particular BPXA's project. NMFS has determined that it is unnecessary to impose 160–dB and 120–dB safety zones on BPXA since their activities will cease prior to such zones being required in the Beaufort Sea. The 160–dB zone is for large aggregations of bowhead whales. Since the majority of the stock will be in the Canadian Beaufort during BPXA's activities, NMFS has determined that this measure is not necessary. Additionally, NMFS has determined that BPXA does not need to monitor a 120–dB shutdown zone since this is only necessary when 4 or more cow/calf pairs are sighted. Since the animals are not normally located in the part of the Beaufort Sea where BPXA will be conducting its survey in July and August and the shallow water depths (which are not considered suitable bowhead habitat), it is highly unlikely that 4 or more cow/calf pairs will be sighted during BPXA's activity.

Comment 43: The scope of the PEA is explicitly limited to activities that occur during 2006. Those seismic survey activities have already occurred, as well as an additional season worth of activities in 2007. The PEA does not evaluate activities that will occur over a period of several years, though NMFS has continued to rely on it as if its scope

were for a multi-year program of seismic surveys. In addition, the PEA uses arbitrary significance criteria for non-endangered marine mammals that would allow long-lasting impacts to populations, or in fact the entire Arctic ecosystem, that would nonetheless be deemed insignificant. These significance criteria are inappropriate for an evaluation of impacts from seismic surveys, as indicated by MMS' use of more defensible significance criteria based on potential biological removal form marine mammal populations affected by seismic surveys in the Gulf of Mexico.

Response: The NMFS has prepared and released to the public, a SEA for seismic surveys that are expected to occur in 2008 (see **ADDRESSES** for availability). This SEA incorporates by reference the relevant information contained in the 2006 PEA and updates that information where necessary to assess impacts on the marine environment from the 2008 seismic survey activities. NMFS believes that it is fully compliant with the requirements of NEPA in its preparation of its NEPA documents.

Marine Mammals Affected by the Activity

The Beaufort Sea supports a diverse assemblage of marine mammals, including bowhead, gray, beluga, killer, minke, fin, and humpback whales, harbor porpoises, ringed, spotted, and bearded seals, polar bears, and walruses. These latter two species are under the jurisdiction of the USFWS and are not discussed further in this document. A separate LOA was issued to BPXA by the USFWS specific to walruses and polar bears.

A total of three cetacean species and four pinniped species are known to occur or may occur in the Beaufort Sea in or near the Liberty area (see Table 1 in BPXA's application for information on habitat and abundance). Of these species, only the bowhead whale is listed as endangered under the ESA. The narwhal, killer whale, harbor porpoise, minke whale, fin whale, and humpback whale could occur in the Beaufort Sea, but each of these species is rare or extralimital and unlikely to be encountered in the Liberty area.

The marine mammal species expected to be encountered most frequently throughout the seismic survey in the Liberty area is the ringed seal. The bearded and spotted seal can also be observed but to a far lesser extent than the ringed seal. Presence of beluga, bowhead, and gray whales in the shallow water environment within the barrier islands is possible but expected to be very limited because bowhead and beluga whales are mostly found farther east in the Mackenzie Delta, Camden Bay, and other parts of the Canadian Beaufort Sea in July and August. Also, during this time, gray whales are mostly found in the northern Bering and Chukchi Seas and are rarely seen in the project area. Descriptions of the biology, distribution, and population status of the marine mammal species under NMFS' jurisdiction can be found in BPXA's application, the 2007 NMFS/MMS DPEIS, and the NMFS SARs. The Alaska SAR is available at: *http://www.nmfs.noaa.gov/pr/pdfs/sars/ak2007.pdf*. Please refer to those documents for information on these species.

Potential Effects of Airgun Sounds on Marine Mammals

The effects of sounds from airguns might include one or more of the following: tolerance, masking of natural sounds, behavioral disturbance, and temporary or permanent hearing impairment or non-auditory effects (Richardson *et al.*, 1995). As outlined in previous NMFS documents, the effects of noise on marine mammals are highly variable, and can be categorized as follows (based on Richardson *et al.*, 1995):

(1) The noise may be too weak to be heard at the location of the animal (i.e., lower than the prevailing ambient noise level, the hearing threshold of the animal at relevant frequencies, or both);

(2) The noise may be audible but not strong enough to elicit any overt behavioral response;

(3) The noise may elicit reactions of variable conspicuousness and variable relevance to the well being of the marine mammal; these can range from temporary alert responses to active avoidance reactions such as vacating an area at least until the noise event ceases;

(4) Upon repeated exposure, a marine mammal may exhibit diminishing responsiveness (habituation), or disturbance effects may persist; the latter is most likely with sounds that are highly variable in characteristics, infrequent, and unpredictable in occurrence, and associated with situations that a marine mammal perceives as a threat;

(5) Any anthropogenic noise that is strong enough to be heard has the potential to reduce (mask) the ability of a marine mammal to hear natural sounds at similar frequencies, including calls from conspecifics, and underwater environmental sounds such as surf noise;

(6) If mammals remain in an area because it is important for feeding, breeding, or some other biologically important purpose even though there is chronic exposure to noise, it is possible that there could be noise-induced physiological stress; this might in turn have negative effects on the well-being or reproduction of the animals involved; and

(7) Very strong sounds have the potential to cause temporary or permanent reduction in hearing sensitivity. In terrestrial mammals, and presumably marine mammals, received sound levels must far exceed the animal's hearing threshold for there to be any TTS in its hearing ability. For transient sounds, the sound level necessary to cause TTS is inversely related to the duration of the sound. Received sound levels must be even higher for there to be risk of permanent hearing impairment. In addition, intense acoustic or explosive events may cause trauma to tissues associated with organs vital for hearing, sound production, respiration and other functions. This trauma may include minor to severe hemorrhage.

The notice of the proposed IHA (73 FR 24236, May 2, 2008) included a discussion of the effects of sounds from airguns on mysticetes, odontocetes, and pinnipeds, including tolerance, masking, behavioral disturbance, hearing impairment and other physical effects, and non-auditory physiological effects. Additional information on the behavioral reactions (or lack thereof) by all types of marine mammals to seismic vessels can be found in Appendix C of BPXA's application.

The notice of proposed IHA also included a discussion of the effects of pinger signals on marine mammals. Because of the low power output and the weaker signals produced by the pingers than by the airguns, NMFS believes it unlikely that marine mammals will be exposed to pinger signals at levels at or above those likely to cause harassment.

Estimated Take of Marine Mammals by Incidental Harassment

The anticipated harassments from the activities described above may involve temporary changes in behavior. There is no evidence that the planned activities could result in serious injury or mortality, for example due to collisions with vessels, strandings, or from sound levels high enough to result in PTS. Disturbance reactions, such as avoidance, are very likely to occur among marine mammals in the vicinity of the source vessel. The mitigation and monitoring measures proposed to be implemented (see below) during this survey are based on Level B harassment

criteria and will minimize the potential for serious injury or mortality.

The notice of the proposed IHA (73 FR 24236, May 2, 2008) included an in-depth discussion of the methodology used by BPXA to estimate incidental take by harassment by seismic and the numbers of marine mammals that might be affected in the seismic acquisition activity area in the Beaufort Sea. Additional information was included in BPXA's application. A summary is provided here.

The density estimates for the species covered under this proposed IHA are based on the estimates by Moore *et al.* (2000b) for beluga whales, Miller *et al.* (2002) for bowhead whales, and Moulton *et al.* (2003) and Frost *et al.* (2003) for ringed seals. The estimates for the number of marine mammals that might be affected during the proposed OBC seismic survey in the Liberty area are based on expected marine mammal density and anticipated area ensonified by levels of greater than 170 and 160 dB re 1 μPa.

In its application, BPXA provides estimates of the number of potential ''exposures'' to sound levels greater than 160 dB re 1 μPa (rms) and greater than 170 dB. BPXA states that while the 160–dB criterion applies to all species of cetaceans and pinnipeds, BPXA believes that a 170–dB criterion should be considered appropriate for delphinids and pinnipeds, which tend to be less responsive, whereas the 160–dB criterion is considered appropriate for other cetaceans (LGL, 2007). However, NMFS has noted in the past that it is current policy to estimate Level B harassment takes based on the 160–dB criterion for all species.

Expected density of marine mammals in the survey area of operation and area of influence are based on best available data. Density data derived from studies conducted in or near the proposed survey area are used for calculations, where available. When estimates were derived from data collected in regions, habitats, or seasons that differ from the proposed seismic survey, adjustments to reported population or density estimates were made to account for these differences insofar as possible (see Section 6.1 of BPXA's application).

The anticipated area to be ensonified by levels of greater than 160 dB re 1 Pa is a combination of the area covered by the approximately 3,219 km (2,000 mi) survey lines and the estimated safety radii. The close spacing of neighboring vessel tracklines within the planned seismic survey area results in a limited area exposed to sounds of 160 dB or greater, while much of that area is exposed repeatedly.

Marine Mammal Density Estimates

The duration of the seismic data acquisition in the Liberty area is estimated to be approximately 40 days, based on a continuous 24–hr operation. Therefore, the nearshore marine mammal densities for the summer period have been applied to 95 percent of the total trackline kilometers. The fall densities have been applied to the remaining 5 percent.

Most marine mammals in the Alaskan Beaufort Sea are migratory, occupying different habitats and/or locations during the year. The densities can therefore vary greatly within seasons and for different locations. For the purpose of this IHA request, different densities have been derived for the summer (late July through August) and the fall (September through early October). In addition to seasonal variation in densities, spatial differentiation is also an important factor for marine mammal densities, both in latitudinal and longitudinal gradient. Taking into account the size and location of the proposed seismic survey area and the associated area of influence, only the nearshore zone (defined as the area between the shoreline and the 50 m, 164 ft, line of bathymetry) in the western part of the Beaufort Sea (defined as the area west of 141° W.) is relevant for the density calculations. If the best available density data cover other zones than the nearshore zone or areas outside the western part of the Beaufort Sea, densities were derived based on expert judgment.

Because the available density data are not always representative for the area of interest, and correction factors were not always known, there is some uncertainty in the data and assumptions used in the density calculations. To provide allowance for these uncertainties, maximum estimates of the numbers potentially affected have been provided in addition to average densities, although NMFS relies on the average density estimate to derive potential exposure estimates. The marine mammal densities presented are believed to be close to, and in most cases, higher than the densities that are expected to be encountered during the survey.

Cetaceans

The densities of beluga and bowhead whales present in the Beaufort Sea are expected to vary by season and location. During the early and mid-summer, most belugas and bowheads are found in the Canadian Beaufort Sea or adjacent areas. During fall, both species migrate through the Alaskan Beaufort Sea, sometimes interrupting their migration to feed. However, since survey activity will cease prior to the fall migration period, few cetaceans are expected to be taken. Additional species specific information for both bowhead and belugas was contained in the notice of proposed IHA.

Pinnipeds

Pinnipeds in the polar regions are mostly associated with sea ice and most census methods count pinnipeds when they are hauled out on the ice, not in open-water where seismic surveys are conducted. Consequently, the density and potential take (exposure) numbers for seals in the Beaufort Sea will likely overestimate the number of seals that would likely be encountered and/or exposed to seismic airguns because only animals in the water near the survey area would be exposed to the seismic activity sound sources. Because seals would be more widely dispersed at this time of the year, animal densities would be less than when seals are concentrated on and near the ice. However, to account for the proportion of animals present but not hauled out (availability bias) or seals present on the ice but missed (detection bias), a correction factor should be applied to the ''raw'' counts. This correction factor is very dependent on the behavior of each species. To estimate the proportion of ringed seals visible resting on the ice surface, radio tags were placed on seals during the spring months during 1999–2003 (Kelly *et al.*, 2006). Applying the probability that seals were visible to the data from past aerial surveys indicated that the fraction of seals visible varied from less than 0.4 to more than 0.75 between survey years. The environmental factors that are important in explaining the availability of seals to be counted were found to be time of day, date, wind speed, air temperature, and days from snow melt (Kelly *et al.*, 2006). No correction factors have been applied to the seal densities reported here. The seismic activities covered by the present IHA request will occur during the open water season. Seal density during this period is generally lower than during spring when animals are hauled out on the ice. No distinction is made in density of pinnipeds between summer and autumn season. Additional species specific information for ringed, bearded, and spotted seals was contained in the proposed IHA notice.

Exposure Calculations for Marine Mammals

Impacts on marine mammals from the planned seismic survey focus on the

sound sources of the seismic airguns. A complete description of the methodology used to estimate the safety radii for received levels of 190, 180, and 160 dB re 1 μPa for pulsed sounds emitted by the airgun array with a total discharge volume of 880 in^3 and the assumptions underlying these calculations were provided in the proposed IHA notice and BPXA's application (more specifications of this airgun array are included in Appendix B of BPXA's application). A summary is provided here. The distance to reach received sound levels of 160 dB re 1 μPa (rms) will be used to calculate the potential numbers of marine mammals that may be exposed to these sound levels. The distances to received levels of 180 and 190 dB re 1 μPa (rms) are mainly relevant as safety radii for mitigation purposes (see below).

Table 3 in BPXA's application and Table 1 here outline the estimated distances for specified received levels from airgun arrays with total discharge volumes of 440 in^3 and 880 in^3 in both 1 and 4 m (3.3 and 13 ft) of water. The estimated distances are based on transmission loss profiles within the barrier islands. It is expected that these islands will function as a sound barrier beyond which sound will not propagate much, although most propagation is expected through the channels between the islands. Therefore, the estimated distances for 120 dB and maybe 160 dB (especially for the source lines closest to the islands) may be overestimations.

TABLE 1. ESTIMATED DISTANCES FOR SPECIFIED RECEIVED LEVELS FROM AIRGUN ARRAYS WITH A TOTAL DISCHARGE VOLUME OF 440 IN^3 AND 880 IN^3. NOTE THAT THE ARRAY DEPTH IS AN IMPORTANT FACTOR FOR SOUND PROPAGATION LOSS.

Received levels (dB re 1 μPa rms) [a]	Distance in meters [b] (array depth 1 m)		Distance in meters [b] (array depth 4 m)	
	440 in^3	880 in^3	440 in^3	880 in^3
190	120	235	200	390
180	280	545	462	880
170	640	1,190	1,030	1,830
160	1,380	2,380	2,090	3,430
120	10,800	13,700	12,900	16,000

[a] The distance in meters for each received level was calculated using the radius calculator available to the public at www.greeneridge.com (courtesy of W.C. Burgess, Ph.D.)
[b] Received levels of airgun sounds are expressed in dB re 1 μPa (rms, averaged over pulse duration).

The distances from the source to specific received sound levels as summarized in Table 3 of the application and Table 1 above are estimates used for the purpose of this IHA request. These estimated distances will be verified with field measurements at the start of the survey.

The radii associated with received sound levels of 160 and/or 170 dB re 1 μPa (rms) or higher are used to calculate the number of potential marine mammal ''exposures'' to sounds that have the potential to impact their behavior. The 160–dB criterion is applied for all species, and for pinnipeds additional calculations were made for the 170–dB criterion.

The potential number of each species that might be exposed to received levels of 160 and 170 dB re 1 μPa (rms) or greater is calculated by multiplying:

- The expected species density as provided in Table 2 of BPXA's application; by
- The anticipated area to be ensonified to that level during airgun operations.

The area expected to be ensonified was determined by entering the seismic survey lines into a MapInfo Geographic Information System (GIS). GIS was then used to identify the relevant areas by ''drawing'' the applicable 160–dB buffer from Table 3 in the application or Table 1 above around each seismic source line and then to calculate the total area within the buffers. This method avoids the large overlap of buffer zones from each seismic source line and hence an overestimation of the potential number of marine mammals exposed.

The following table indicates the authorized take levels for each species, as well as the estimated percent of the population that these numbers constitute. Only small numbers of all species are expected to be taken by harassment during the proposed OBC seismic survey, with less than 1 percent of the population of each species authorized for take by Level B (behavioral) harassment.

TABLE 2. SUMMARY OF THE NUMBER OF MARINE MAMMALS POTENTIALLY EXPOSED TO RECEIVED SOUND LEVELS OF ≥160 DB AND ≥170 DB (FOR PINNIPEDS ONLY) DURING BPXA'S SEISMIC SURVEY IN THE LIBERTY AREA, BASED ON RADII FOR 880 IN^3 ARRAY AND 4 M (13 FT) ARRAY DEPTH.

Species	Exposures to ≥160 dB		Exposures to ≥170 dB		Estimated % of population*
	Average	Maximum	Average	Maximum	
Cetaceans					
Beluga Whale	1	6	NA	NA	0.003
Bowhead Whale	2	12	NA	NA	0.02
Pinnipeds					

TABLE 2. SUMMARY OF THE NUMBER OF MARINE MAMMALS POTENTIALLY EXPOSED TO RECEIVED SOUND LEVELS OF ≥160 dB AND ≥170 dB (FOR PINNIPEDS ONLY) DURING BPXA'S SEISMIC SURVEY IN THE LIBERTY AREA, BASED ON RADII FOR 880 IN^3 ARRAY AND 4 M (13 FT) ARRAY DEPTH.—Continued

Species	Exposures to ≥160 dB		Exposures to ≥170 dB		Estimated % of population*
	Average	Maximum	Average	Maximum	
Ringed Seal	156	222	141	201	0.06
Bearded Seal	11	16	10	14	0.004
Spotted Seal	2	2	1	2	0.003

* The percentage is based on the average number of animals potentially exposed to 160 dB or greater.

Conclusions

Impacts of seismic sounds on cetaceans are generally expected to be restricted to avoidance of a limited area around the seismic operation and short-term changes in behavior, falling within the MMPA definition of Level B harassment. The authorized harassment for each species is based on the estimated average numbers exposed to 160 dB re 1 μPa (rms) or greater from an airgun array operating at 4 m (13 ft) depth.

The estimated numbers of cetaceans and pinnipeds potentially exposed to sound levels sufficient to cause behavioral disturbance are very low percentages of the regional stock or population size in the Bering-Chukchi-Beaufort seas. For the bowhead whale, a species listed as endangered under the ESA, BPXA's estimates include approximately 2 bowheads. This is approximately 0.02 percent of the estimated 2008 Bering-Chukchi-Beaufort population of 13,330 (based on a population size of 10,545 in 2001 and an annual population growth of 3.4 percent, cf Table 1 in the application). Although the best available data suggest that beluga whales are not likely to be present in or near the Liberty area, it is possible that some individuals might be observed. Belugas also show aggregate behavior, and so there is the unlikely event that if belugas appear in this area it might be in a larger group. Even so, this larger number still constitutes a very low percentage of the estimated regional stock or population size (see Table 6 in the application).

The many reported cases of apparent tolerance by cetaceans of seismic operations, vessel traffic, and some other human activities show that co-existence is possible. Mitigation measures such as controlled speed, look outs, non-pursuit, shutdowns or power-downs when marine mammals are seen within defined ranges, and avoiding migration pathways when animals are likely most sensitive to noise will further reduce short-term reactions, and minimize any effects on hearing sensitivity. Additionally, the fact that BPXA does not intend to conduct any activities during or after the fall migration period further reduces the potential for effects to cetaceans. In all cases, the effects are expected to be short-term, with no lasting biological consequence. Subsistence issues are addressed below.

From the few pinniped species likely to be encountered in the study area, the ringed seal is by far the most abundant marine mammal that could be encountered. The estimated number of ringed seals potentially exposed to airgun sounds at received levels of 160 dB re 1 μPa (rms) during the seismic survey represent 0.06 percent of the Bering-Chukchi-Beaufort stock, and these are even smaller portions for bearded and spotted seals (see Table 6 in the application and Table 2 above). It is probable that at this received level, only a small percentage of these seals would actually experience behavioral disturbance, if any at all. The short-term exposures of pinnipeds to airgun sounds are not expected to result in any long-term negative consequences for the individuals or their stocks. Additionally, since these numbers do not take into account that mitigation and monitoring measures will be implemented during the survey (see below), the numbers should in fact be even lower.

Potential Impact on Habitat

The seismic survey will not result in any permanent impact on habitats used by marine mammals or to the food sources they utilize. The activities will be of short duration in any particular area at any given time; thus any effects would be localized and short-term. The main impact issue associated with the activity will be temporarily elevated sound levels and the associated direct effects on marine mammals, as discussed above.

During the seismic study only a small fraction of the available habitat would be ensonified at any given time. Disturbance to fish species would be short-term, and fish would return to their pre-disturbance behavior once the seismic activity ceases. Thus, the survey would have little, if any, impact on the abilities of marine mammals to feed in the area where seismic work is planned.

Some mysticetes, including bowhead whales, feed on concentrations of zooplankton. Some feeding bowhead whales may occur in the Alaskan Beaufort Sea in July and August, and others feed intermittently during their westward migration in September and October (Richardson and Thomson [eds.], 2002; Lowry *et al.*, 2004). A reaction by zooplankton to a seismic impulse would only be relevant to whales if it caused concentrations of zooplankton to scatter. Pressure changes of sufficient magnitude to cause that type of reaction would probably occur only very close to the source, if any would occur at all. Impacts on zooplankton behavior are predicted to be negligible, and that would translate into negligible impacts on feeding mysticetes. More importantly, bowhead whales are not expected to occur or feed in the shallow area covered by the seismic survey. Thus, the activity is not expected to have any habitat-related effects that could cause significant or long-term consequences for individual marine mammals or their populations.

Effects of Seismic Noise and Other Related Activities on Subsistence

The disturbance and potential displacement of marine mammals by sounds from seismic activities are the principal concerns related to subsistence use of the area. Subsistence remains the basis for Alaska Native culture and community. Marine mammals are legally hunted in Alaskan waters by coastal Alaska Natives. In rural Alaska, subsistence activities are often central to many aspects of human existence, including patterns of family life, artistic expression, and community religious and celebratory activities. The

main species that are hunted include bowhead and beluga whales, ringed, spotted, and bearded seals, walruses, and polar bears . The importance of each of these species varies among the communities and is largely based on availability.

In the Beaufort Sea, bowhead and beluga whales are the species primarily harvested during the open water season, when the seismic survey is planned. Bowhead whale hunting is the key activity in the subsistence economies of Barrow and two smaller communities, Nuiqsut and Kaktovik. The whale harvests have a great influence on social relations by strengthening the sense of Inupiat culture and heritage in addition to reinforcing family and community ties. Barrow residents focus hunting efforts on bowhead whales during the spring but can also conduct bowhead hunts in the fall. The communities of Nuiqsut and Kaktovik engage only in the fall bowhead hunt. Few belugas are present or harvested by Nuiqsut or Kaktovik.

The Nuiqsut subsistence hunt for bowhead whales has the potential to be impacted by the seismic survey due to its proximity to Cross Island. Around late August, the hunters from Nuiqsut establish camps on Cross Island from where they undertake the fall bowhead whale hunt. The hunting period starts normally in early September and may last as late as mid-October, depending mainly on ice and weather conditions and the success of the hunt. Most of the hunt occurs offshore in waters east, north, and northwest of Cross Island where bowheads migrate and not inside the barrier islands (Galginaitis, 2007). Hunters prefer to take bowheads close to shore to avoid a long tow, but Braund and Moorehead (1995) report that crews may (rarely) pursue whales as far as 80 km (50 mi) offshore. BPXA's seismic survey will take place within the barrier islands in very shallow water (<10 m, 33 ft). BPXA discussed potential concerns with the affected communities (see ''POC'' section) throughout the early part of 2008 and recently signed a CAA with the AEWC and affected community whaling captains. One of the agreements reached by the parties to reduce impacts on subsistence was that BPXA will cease all activity by August 25.

Ringed seals are hunted mainly from October through June. Hunting for these smaller mammals is concentrated during the ice season because of larger availability of seals on the ice. In winter, leads and cracks in the ice off points of land and along the barrier islands are used for hunting ringed seals. Although ringed seals are available year-round, the seismic survey will not occur during the primary period when these seals are typically harvested.

The more limited seal harvest that takes place during the open water season starts around the second week of June. Hunters take boats on routes in the Colville River and much of Harrison Bay. The main seal hunt occurs in areas far west from the Liberty area, so impacts on the subsistence seal hunt are not expected.

Potential impacts on subsistence uses of marine mammals will be mitigated by application of the procedures established in the CAA between the seismic operators, the AEWC, and the Captains' Associations of Barrow, Nuiqsut, Kaktovik, Wainwright, Pt. Lay, and Pt. Hope. The CAA curtails the times and locations of seismic and other noise producing sources during times of active bowhead whale scouting and actual whaling activities within the traditional subsistence hunting areas of the potentially affected communities.

POC

Regulations at 50 CFR 216.104(a)(12) require IHA applicants for activities that take place in Arctic waters to provide a POC or information that identifies what measures have been taken and/or will be taken to minimize adverse effects on the availability of marine mammals for subsistence purposes. BPXA negotiated a POC in the form of a CAA with representatives of the communities of Nuiqsut and Kaktovik, the AEWC, and the NSB for the 2008 Liberty seismic survey in Foggy Island Bay, Beaufort Sea. BPXA worked with the people of these communities and organizations to identify and avoid areas of potential conflict. Meetings that have taken place prior to the survey include:

- October 25, 2007: Meeting with AEWC and NSB representatives during the AEWC convention;
- October 29, 2007: Meeting with NSB Wildlife Group to provide updates of the survey and to obtain information on their opinions and views on mitigation and monitoring requirements.
- February 7, 2008: Meeting in Deadhorse with Nuiqsut and Kaktovik whaling captains to provide an introduction to the planned 2008 Liberty seismic survey.
- February 28, 2008: First Annual Programmatic CAA Meeting with AEWC commissioners and community representatives from the affected villages in Barrow.
- April 2008: As in previous years, BPXA participated in the ''open water peer/stakeholder review meeting'' convened by NMFS in Anchorage in mid-April 2008, where representatives of the AEWC and NSB also participated.
- May 13, 2008: Meeting with the NSB DWM to discuss monitoring plans and project concerns.
- June 18, 2008: Two meetings in Nuiqsut to provide a survey overview to the whaling captains and representatives from the community.

The CAA covers the phases of BPXA's seismic survey planned to occur in July and August. This plan identifies measures that will be taken to minimize any adverse effects on the availability of marine mammals for subsistence uses and to ensure good communication between BPXA (including the seismic team leads), native communities along the coast, and subsistence hunters at sea.

It should be noted that NMFS must make a determination under the MMPA that an activity would not have an unmitigable adverse impact on the subsistence needs for marine mammals. While this includes usage of both cetaceans and pinnipeds, the primary impact by seismic activities is expected to be impacts from noise on bowhead whales during its westward fall feeding and migration period in the Beaufort Sea. NMFS has defined unmitigable adverse impact as an impact resulting from the specified activity: (1) That is likely to reduce the availability of the species to a level insufficient for a harvest to meet subsistence needs by: (i) causing the marine mammals to abandon or avoid hunting areas, (ii) directly displacing subsistence users, or (iii) placing physical barriers between the marine mammals and the subsistence hunters; and (2) That cannot be sufficiently mitigated by other measures to increase the availability of marine mammals to allow subsistence needs to be met (50 CFR 216.103).

Based on the signed CAA, the mitigation and monitoring measures included in the IHA (see next sections), and the project design itself, NMFS has determined that there will not be an unmitigable adverse impact on subsistence uses from BPXA's activities.

Mitigation Measures

This section describes the measures that have been included in the survey design and those that are required to be implemented during the survey.

Mitigation measures to reduce any potential impact on marine mammals that have been considered and included in the planning and design phase are as follows:

- The area for which seismic data is required, i.e., the well path from SDI to the Liberty Prospect, has been minimized by re-analyzing and re-

interpreting existing data (to the extent available and usable). This has led to a reduction in size from approximately 220 km² (85 mi²) to approximately 91 km² (35 mi²). This is not the total seismic area extent that includes the seismic source vessels and receiver lines, although they are related.

- The total airgun discharge volume has been reduced to the minimum volume needed to obtain the required data. The total volume for the proposed survey is 880 in³ (consisting of two 4–gun arrays of 440 in³).
- Two seismic source vessels will be used simultaneously (alternating their shots) to minimize the total survey period. This will allow the survey to be completed prior to the start of the whale fall migration and whaling season.

The seismic survey will take place inside the barrier islands in nearshore shallow waters. The survey period will be July-August, prior to the bowhead whale migration season. It is unlikely that whales will be present in the nearshore zone where the seismic survey is taking place, and if they are present, the numbers are expected to be low. The main marine mammal species to be expected in the area is the ringed seal. With the required mitigation measures (see below), any effect on individuals is expected to be limited to short-term behavioral disturbance with a negligible impact on the affected species or stock.

The mitigation measures are an integral part of the survey in the form of specific procedures, such as: (1) speed and course alterations; (2) power-down, ramp up, and shutdown procedures; and (3) provisions for poor visibility conditions. For the implementation of these measures, it is important to first establish and verify the distances of various received levels that function as safety zones and second to monitor these safety zones and implement mitigation measures where required.

Establishment and Monitoring of Safety Zones

Greeneridge Sciences, Inc. estimated for BPXA the distances from the 880 in³ seismic airgun array where sound levels 190, 180, and 160 dB re 1 μPa (rms) would be received (Table 3 in BPXA's application and Table 1 above). For these estimations, the results from transmission loss data obtained in the Liberty area in 1997 were used (Greene, 1998). The calculations included distances for a reduced array of 440 in³ and two array depths (1 and 4 m, 3 and 13 ft). These calculations form the basis for estimating the number of animals potentially affected.

Received sound levels will be measured as a function of distance from the array prior to the start of the survey. This will be done for: (a) two 440 in³ arrays (880 in³), (b) one 440 in³ array, and (c) one 70 in³ airgun (smallest volume of array). BPXA will apply appropriate adjustments to the estimated safety zones (see Table 3 in the application or Table 1 above) based on measurements of the 880 in³ (two 440 in³) array. Results from measurements of the 440 in³ and 70 in³ data will be used for the implementation of mitigation measures to power down the sound source and reduce the size of the safety zones when required.

MMOs on board the vessels play a key role in monitoring the safety zones and implementing the mitigation measures. Their primary role is to monitor marine mammals near the seismic source vessel during all daylight airgun operations and during any nighttime start-up of the airguns. These observations will provide the real-time data needed to implement the key mitigation measures described below. When marine mammals are observed within or about to enter designated safety zones, airgun operations will be powered down (or shut down if necessary) immediately. These safety zones are defined as the distance from the source to a received level of 190 dB for pinnipeds and 180 dB for cetaceans. A specific dedicated vessel monitoring program to detect aggregations of baleen whales (12 or more) within the 160–dB zone or 4 or more bowhead whale cow-calf pairs within the 120–dB zone is not considered applicable here as none of these situations are expected in the survey based on the estimated safety zones, as well as the time of year that activities will occur.

Speed and Course Alterations

If a marine mammal (in water) is detected outside the safety radius and, based on its position and the relative motion, is likely to enter the safety radius, the vessel's speed and/or direct course will be changed in a manner that does not compromise safety requirements. The animal's activities and movements relative to the seismic vessel will be closely monitored to ensure that the individual does not approach within the safety radius. If the mammal appears likely to enter the safety radius, further mitigative actions will be taken, i.e., either further course alterations or power-down or shutdown of the airgun(s).

Power-down Procedure

A power-down involves decreasing the number of airguns in use such that the radii of the 190–dB and 180–dB zones are decreased to the extent that observed marine mammals are not in the applicable safety zone. Situations that would require a power-down are listed below.

(1) When the vessel is changing from one source line to another, one airgun or a reduced number of airguns is operated. The continued operation of one airgun or a reduced airgun array is intended to: (a) alert marine mammals to the presence of the seismic vessel in the area and (b) retain the option of initiating a ramp up to full operations under poor visibility conditions.

(2) If a marine mammal is detected outside the safety radius but is likely to enter the safety radius, and if the vessel's speed and/or course cannot be changed to avoid the animal from entering the safety zone. As an alternative to a complete shutdown, the airguns may be powered- down before the animal is within the safety zone.

(3) If a marine mammal is already within the safety zone when first detected, the airguns may be powered-down immediately if this is a reasonable alternative to a complete shutdown. This decision will be made by the MMO and can be based on the results obtained from the acoustic measurements for the establishments of safety zones.

Following a power-down, operation of the full airgun array will not resume until the marine mammal has cleared the safety zone. The animal will be considered to have cleared the safety zone if it:

(1) Is visually observed to have left the safety zone;

(2) Has not been seen within the zone for 15 min in the case of small odontocetes and pinnipeds; or

(3) Has not been seen within the zone for 30 min in the case of mysticetes (large odontocetes do not occur within the study area).

Shutdown Procedure

A shutdown procedure involves the complete turn off of all airguns. Ramp-up procedures will be followed during resumption of full seismic operations. The operating airgun(s) will be shut down completely during the following situations:

(1) If a marine mammal approaches or enters the applicable safety zone, and a power- down is not practical or adequate to reduce exposure to less than 190 dB (rms; pinnipeds) or 180 dB (rms; cetaceans).

(2) If a marine mammal approaches or enters the estimated safety radius

around the reduced source that will be used during a power-down.

Airgun activity will not resume until the marine mammal has cleared the safety radius. The animal will be considered to have cleared the safety radius as described above for power-down procedures.

Ramp-up Procedure

A ramp-up procedure will be followed when the airgun array begins operating after a specified duration with no or reduced airgun operations. The specified duration depends on the speed of the source vessel, the size of the airgun array that is being used, and the size of the safety zone, but is often about 10 min.

NMFS requires that, once ramp-up commences, the rate of ramp-up be no more than 6 dB per 5 min period. Ramp-up will begin with the smallest airgun, in this case, 70 in^3. BPXA intends to follow the ramp-up guideline of no more than 6 dB per 5 min period. A common procedure is to double the number of operating airguns at 5–min intervals. During the ramp-up, the safety zone for the full 8–gun array will be maintained. A ramp-up procedure can be applied only in the following situations:

(1) If, after a complete shutdown, the entire 180 dB safety zone has been visible for at least 30 min prior to the planned start of the ramp-up in either daylight or nighttime. If the entire safety zone is visible with vessel lights and/or night vision devices, then ramp-up of the airguns from a complete shutdown may occur at night.

(2) If one airgun has operated during a power-down period, ramp-up to full power will be permissible at night or in poor visibility, on the assumption that marine mammals will either be alerted by the sounds from the single airgun and could move away or may be detected by visual observations.

(3) If no marine mammals have been sighted within or near the applicable safety zone during the previous 15 min in either daylight or nighttime, provided that the entire safety zone was visible for at least 30 min.

Poor Visibility Conditions

BPXA plans to conduct 24–hr operations. Regarding nighttime observations, note that there will be no periods of total darkness during the survey. There will be 24 hrs of daylight each day for the first two weeks, after which, nautical twilight will set in for 1–7.5 hrs at a time each day. MMOs are proposed not to be on duty during ongoing seismic operations at night, given the very limited effectiveness of visual observation at night. At night, bridge personnel will watch for marine mammals (insofar as practical) and will call for the airguns to be shut down if marine mammals are observed in or about to enter the safety zones. If a ramp-up procedure needs to be conducted following a full shutdown at night, two MMOs need to be present to monitor for marine mammals near the source vessel and to determine if proper conditions are met for a ramp-up. The proposed provisions associated with operations at night or in periods of poor visibility include:

(1) During any nighttime operations, if the entire 180–dB safety radius is visible using vessel lights and/or night vision devices, then start of a ramp-up procedure after a complete shutdown of the airgun array may occur following a 30–min period of observation without sighting marine mammals in the safety zone.

(2) If during foggy conditions or darkness (which may be encountered starting in late August), the full 180–dB safety zone is not visible, the airguns cannot commence a ramp-up procedure from a full shutdown.

(3) If one or more airguns have been operational before nightfall or before the onset of foggy conditions, they can remain operational throughout the night or foggy conditions. In this case, ramp-up procedures can be initiated, even though the entire safety radius may not be visible, on the assumption that marine mammals will be alerted by the sounds from the single airgun and have moved away.

BPXA considered the use of PAM in conjunction with visual monitoring to allow detection of marine mammals during poor visibility conditions, such as fog. The use of PAM for this specific survey might not be very effective because the species most commonly present (ringed seal) is not vocal during this time period.

Monitoring and Reporting Plan

BPXA will sponsor marine mammal monitoring during the Liberty seismic survey in order to implement the required mitigation measures that require real-time monitoring, to satisfy the monitoring requirements of the IHA, and to meet any monitoring requirements agreed to as part of the POC/CAA. The monitoring plan is described below.

The monitoring work described here is planned as a self-contained project independent of any other related monitoring projects that may occur simultaneously in the same area. Provided that an acceptable methodology and business relationship can be worked out in advance, BPXA is prepared to work with other energy companies in its efforts to manage, understand, and fully communicate information about environmental impacts related to its activities.

Vessel-based Visual Monitoring by MMOs

There will be three MMOs on each source vessel during the entire survey. These vessel-based MMOs will monitor marine mammals near the seismic source vessels during all daylight hours and during any ramp-up of airguns at night. In case the source vessels are not shooting but are involved in the deployment or retrieval of receiver cables, the MMOs will remain on the vessels and will continue their observations. The main purpose of the MMOs is to monitor the established safety zones and to implement the mitigation measures described previously in this document.

The main objectives of the visual marine mammal monitoring from the seismic source vessels are as follows:

(1) To form the basis for implementation of mitigation measures during the seismic operation (e.g., course alteration, airgun power-down, shutdown and ramp-up);

(2) To obtain information needed to estimate the number of marine mammals potentially affected, which must be reported to NMFS within 90 days after completion of the 2008 seismic survey program;

(3) To compare the distance and distribution of marine mammals relative to the source vessel at times with and without seismic activity; and

(4) To obtain data on the behavior and movement patterns of marine mammals observed and compare those at times with and without seismic activity.

Note that potential to successfully achieve objectives 3 and 4 is subject to the number of animals observed during the survey period.

Two MMOs will also be placed on the mothership the *Arctic Wolf* during its transit from Homer or Anchorage, via the Chukchi Sea and around Barrow to the survey area. Presence of MMOs on this vessel is to prevent any potential impact on beluga whales during the spring hunt, in addition to other measures that will be taken in close communication with the whale hunters of Pt. Lay and Kotzebue, Alaska. According to BPXA, it will be important that at least one Alaska native resident who speaks Inupiat be placed on this vessel.

MMO Protocol – BPXA will work with experienced MMOs that have had previous experience working on seismic

survey vessels, which will be especially important for the lead MMO. At least one Alaska native resident who speaks Inupiat and is knowledgeable about the marine mammals of the area is expected to be included as one of the team members aboard both source vessels and the mother ship.

At least one observer will monitor for marine mammals at any time during daylight hours and nighttime ramp-ups after a full shutdown (and if the entire safety zone is visible). There will be no periods of darkness until mid-August. Two MMOs will be on duty whenever feasible and practical, as the use of two simultaneous observers will increase the early detectability of animals present near the safety zone of the source vessels. MMOs will be on duty in shifts of maximum 4 hrs, but the exact shift regime will be established by the lead MMO in consultation with each MMO team member.

Before the start of the seismic survey, the lead MMO will explain the function of the MMOs, their monitoring protocol, and mitigation measures to be implemented to the crew of the seismic source vessels *Peregrine* and *Miss Dianne*. Additional information will be provided to the crew by the lead MMO that will allow the crew to assist in the detection of marine mammals and (where possible and practical) in the implementation of mitigation measures.

Both the *Peregrine* and *Miss Dianne* are relatively small vessels but form suitable platforms for marine mammal observations. Observations will be made from the bridges, which are respectively approximately 4.5 m (approximately 15 ft) and approximately 3.7 m (approximately 12 ft) above sea level, and where MMOs have the best view around the vessel. During daytime, the MMO(s) will scan the area around the vessel systematically with reticle binoculars (e.g., 7 50 Fujinon) and the naked eye. During any periods of darkness, night vision devices will be available (ITT F500 Series Generation 3 binocular-image intensifier or equivalent). Laser rangefinding binoculars (Leica LRF 1200 laser rangefinder or equivalent) will be available to assist with distance estimation; these are useful in training observers to estimate distances visually, but are generally not useful in measuring distances to animals directly.

Communication Procedures – When marine mammals in the water are detected within or about to enter the designated safety zones, the airgun(s) power-down or shutdown procedures will be implemented immediately. To assure prompt implementation of power-downs and shutdowns, multiple channels of communication between the MMOs and the airgun technicians will be established. During the power-down and shutdown, the MMO(s) will continue to maintain watch to determine when the animal(s) are outside the safety radius. Airgun operations can be resumed with a ramp-up procedure (depending on the extent of the power-down) if the MMOs have visually confirmed that the animal(s) moved outside the safety zone, or if the animal(s) were not observed within the safety zone for 15 min (pinnipeds) or for 30 min (cetaceans). Direct communication with the airgun operator will be maintained throughout these procedures.

Data Recording – All marine mammal observations and any airgun power-down, shutdown, and ramp-up will be recorded in a standardized format. Data will be entered into a custom database using a notebook computer. The accuracy of the data entry will be verified by computerized validity data checks as the data are entered and by subsequent manual checking of the database. These procedures will allow initial summaries of data to be prepared during and shortly after the field program and will facilitate transfer of the data to statistical, graphical, or other programs for further processing and archiving.

Acoustic Measurements and Monitoring

Acoustic measurements and monitoring will be conducted for three different purposes: (1) To establish the distances of the safety zones; (2) to measure source levels (i.e., received levels referenced to 1 m (3 ft) from the sound source) of each vessel of the seismic fleet to obtain knowledge on the sounds generated by the vessels; and (3) to measure received levels offshore of the barrier islands from the seismic sound source.

Verification and Establishment of Safety Zones – Prior to, or at the beginning of the seismic survey, acoustic measurements will be conducted to calculate received sound levels as a function of distance from the airgun sound source. These measurements will be conducted for different discharge volumes.

The results of these acoustic measurements will be used to re-define the safety zone distances for received levels of 190 dB, 180 dB, and 160 dB. The 160–dB received level is monitored to avoid any behavioral disturbances of marine mammals that may be in the area. The distances of the received levels as a function of the different sound sources (varying discharge volumes) will be used to guide power-down and ramp-up procedures. A preliminary report describing the methodology and results of the measurement for at least the 190–dB and 180–dB (rms) safety zones will be submitted to NMFS within 72–hrs of completion of the measurements.

Measurements of Vessel Sounds – BPXA intends to measure vessel sounds of each representative vessel. The exact scope of the source level measurements (back-calculated as received levels at 1 m (3 ft) from the source) should follow a pre-defined protocol to eliminate the complex interplay of factors that underlie these measurements, such as bathymetry, vessel activity, location, season, etc. Where possible and practical the monitoring protocol will be developed in alignment with other existing vessel source level measurements.

Received Sound Levels Offshore the Barrier Islands – The proposed seismic survey will take place inside the barrier islands, and, as such, the sounds from the seismic survey activities are not expected to propagate much beyond the shallow areas formed by these barrier islands.

Aerial Surveys

During the July and August timeframe, no bowhead whales are expected to be present in or close to the survey area, so no aerial surveys are planned or required for BPXA's activity.

Reporting

A report on the preliminary results of the acoustic verification measurements, including as a minimum the measured 190- and 180–dB (rms) radii of the airgun sources, will be submitted within 72–hrs after collection of those measurements at the start of the field season. This report will specify the distances of the safety zones that were adopted for the survey.

A report on BPXA's activities and on the relevant monitoring and mitigation results will be submitted to NMFS within 90 days after the end of the seismic survey. The report will describe the operations that were conducted, the measured sound levels, and the cetaceans and seals that were detected near the operations. The report will be submitted to NMFS, providing full documentation of methods, results, and interpretation pertaining to all acoustic and vessel-based marine mammal monitoring. The 90–day report will summarize the dates and locations of seismic operations, and all whale and seal sightings (dates, times, locations, activities, associated seismic survey activities). Marine mammal sightings will be reported at species level,

however, especially during unfavorable environmental conditions (e.g., low visibility, high sea states) this will not always be possible. The number and circumstances of ramp-up, power-down, shutdown, and other mitigation actions will be reported. The report will also include estimates of the amount and nature of potential impact to marine mammals encountered during the survey.

Additionally, BPXA participates in and contributes money to the Joint Industry Studies Program. This includes coastal aerial surveys in the Chukchi Sea, acoustic ''net'' arrays in the Chukchi Sea, and acoustic arrays in the Beaufort Sea. These studies aid in the gathering of data on abundance and distribution of marine mammals in the Chukchi and Beaufort Seas.

Comprehensive Monitoring Report

In November, 2007, Shell (in coordination and cooperation with other Arctic seismic IHA holders) released a final, peer-reviewed edition of the 2006 Joint Monitoring Program in the Chukchi and Beaufort Seas, July-November 2006 (LGL, 2007). This report is available for downloading on the NMFS website (see **ADDRESSES**). A draft comprehensive report for 2007 was provided to NMFS and those attending the NMFS/MMS Arctic Ocean open water meeting in Anchorage, AK on April 14–16, 2008. Based on reviewer comments made at that meeting, Shell and others are currently revising this report and plans to make it available to the public shortly.

Following the 2008 open water season, a comprehensive report describing the proposed acoustic, vessel-based, and aerial monitoring programs will be prepared. The 2008 comprehensive report will describe the methods, results, conclusions and limitations of each of the individual data sets in detail. The report will also integrate (to the extent possible) the studies into a broad based assessment of industry activities and their impacts on marine mammals in the Beaufort Sea during 2008. The 2008 report will form the basis for future monitoring efforts and will establish long term data sets to help evaluate changes in the Beaufort/Chukchi Sea ecosystems. The report will also incorporate studies being conducted in the Chukchi Sea and will attempt to provide a regional synthesis of available data on industry activity in offshore areas of northern Alaska that may influence marine mammal density, distribution, and behavior.

This comprehensive report will consider data from many different sources including two relatively different types of aerial surveys; several types of acoustic systems for data collection (net array, PAM, vertical array, and other acoustical monitoring systems that might be deployed), and vessel based observations. Collection of comparable data across the wide array of programs will help with the synthesis of information. However, interpretation of broad patterns in data from a single year is inherently limited. Much of the 2008 data will be used to assess the efficacy of the various data collection methods and to establish protocols that will provide a basis for integration of the data sets over a period of years.

ESA

NMFS has previously consulted under section 7 of the ESA on the issuance of IHAs for seismic survey activities in the Beaufort and Chukchi Seas. NMFS issued a Biological Opinion on June 16, 2006, regarding the effects of this action on ESA-listed species and critical habitat under the jurisdiction of NMFS. The Opinion concluded that this action is not likely to jeopardize the continued existence of listed species or result in the destruction or adverse modification of critical habitat. A copy of the Biological Opinion is available at: *http://www.mms.gov/alaska/ref/BioOpinions/ARBOIII–2.pdf*.

NEPA

In 2006, the MMS prepared Draft and Final PEAs for seismic surveys in the Beaufort and Chukchi Seas. NMFS was a cooperating agency in the preparation of the MMS PEA. On November 17, 2006 (71 FR 66912), NMFS and MMS announced that they were preparing a DPEIS in order to assess the impacts of MMS' annual authorizations under the Outer Continental Shelf Lands Act to the U.S. oil and gas industry to conduct offshore geophysical seismic surveys in the Chukchi and Beaufort Seas off Alaska and NMFS' authorizations under the MMPA to incidentally harass marine mammals while conducting those surveys.

On March 30, 2007 (72 FR 15135), the Environmental Protection Agency (EPA) noted the availability for comment of the NMFS/MMS DPEIS. Based upon several verbal and written requests to NMFS for additional time to review the DPEIS, EPA has twice announced an extension of the comment period until July 30, 2007 (72 FR 28044, May 18, 2007; 72 FR 38576, July 13, 2007). Because NMFS has been unable to complete the PEIS, it was determined that the 2006 PEA would need to be updated in order to meet NMFS' NEPA requirement. This approach was warranted as it was reviewing five proposed Arctic seismic survey IHAs for 2008, well within the scope of the PEA's eight consecutive seismic surveys. To update the 2006 Final PEA, NMFS prepared a SEA which incorporates by reference the 2006 Final PEA and other related documents.

Determinations

Based on the information provided in BPXA's application and addendum, public comments received on BPXA's application, the proposed IHA notice (73 FR 24236, May 2, 2008), this document, the 2006 and 2007 Comprehensive Monitoring Reports by Shell Oil Inc. and others, public review of BPXA's mitigation and monitoring program in Anchorage, Alaska, in April, 2008, and the analysis contained in the MMS Final PEA and NMFS' 2008 Final SEA, NMFS has determined that the impact of BPXA conducting seismic surveys in the Liberty Prospect, Foggy Island Bay, Beaufort Sea in 2008 will have a negligible impact on the affected species or stock of marine mammals and that there will not be an unmitigable adverse impact on their availability for taking for subsistence uses provided the mitigation measures required under the authorization are implemented. Moreover, as explained below, NMFS has determined that only small numbers of marine mammals of a species or population stock would be taken by BPXA's seismic activities. The impact of conducting a seismic survey in this area will result, at worst, in a temporary modification in behavior of small numbers of the affected marine mammal species.

NMFS has determined that the short-term impact of conducting seismic surveys in the Liberty Prospect area of the U.S. Beaufort Sea may result, at worst, in a temporary modification in behavior by certain species of marine mammals. While behavioral and avoidance reactions may be made by these species in response to the resultant noise, this behavioral change is expected to have a negligible impact on the affected species or stocks. In addition, no take by death and/or serious injury is anticipated or authorized, and the potential for temporary or permanent hearing impairment will be avoided through the incorporation of the mitigation and monitoring measures described above.

For reasons explained in this document, NMFS does not expect that any marine mammals will be seriously injured or killed during BPXA's seismic survey activities, even if some animals are not detected prior to entering the 180–dB (cetacean) and 190–dB (pinniped) safety zones. These criteria

were set originally by the HESS Workshop (1997, 1999) to approximate where Level A harassment (i.e., defined as ''any act of pursuit, torment or annoyance which has the potential to injure a marine mammal or marine mammal stock in the wild'') from acoustic sources begins. Scientists have determined that these criteria are conservative as they were set for preventing TTS, not PTS. NMFS has determined that a TTS which is the mildest form of hearing impairment that can occur during exposure to a strong sound may occur at these levels. When a marine mammal experiences TTS, the hearing threshold rises and a sound must be stronger in order to be heard. TTS can last from minutes or hours to (in cases of strong TTS) days. For sound exposures at or somewhat above the TTS threshold, hearing sensitivity recovers rapidly after exposure to the noise ends. Few data on sound levels and durations necessary to elicit mild TTS have been obtained for marine mammals, and none of the published data concern TTS elicited by exposure to multiple pulses of sound. It should be understood that TTS is not an injury, as there is no injury to individual cells.

For whales exposed to single short pulses (such as seismic), the TTS threshold appears to be a function of the energy content of the pulse. As noted in this document, the received level of a single seismic pulse might need to be ≤ 210 dB re 1 Pa rms (221–226 dB pk-pk) in order to produce brief, mild TTS. Exposure to several seismic pulses at received levels near 200–205 dB (rms) might result in slight TTS in a small odontocete, assuming the TTS threshold is a function of the total received pulse energy. Seismic pulses with received levels of 200–205 dB or more are usually restricted to a radius of no more than 200 m (656 ft) around a seismic vessel operating a large array of airguns. As a result, NMFS believes that injury or mortality is highly unlikely due to the injury zone being close to the airgun array (astern of the vessel), the establishment of conservative safety zones and shutdown requirements (see ''Mitigation Measures'') and the fact that there is a strong likelihood that baleen whales (bowhead and gray whales) would avoid the approaching airguns (or vessel) before being exposed to levels high enough for there to be any possibility of onset of TTS.

For pinnipeds, information indicates that for single seismic impulses, sounds would need to be higher than 190 dB rms for TTS to occur while exposure to several seismic pulses indicates that some pinnipeds may incur TTS at somewhat lower received levels than do small odontocetes exposed for similar durations. This indicates to NMFS that the 190–dB safety zone provides a sufficient buffer to prevent PTS in pinnipeds.

In conclusion, NMFS believes that a marine mammal within a radius of <100 m (<328 ft) around a typical large array of operating airguns (larger than that to be used by BPXA) may be exposed to a few seismic pulses with levels of >205 dB, and possibly more pulses if the marine mammal moved with the seismic vessel. However, there is no specific evidence that exposure to pulses of airgun sound can cause PTS in any marine mammal, even with large arrays of airguns. The array to be used by BPXA is of moderate size. Given the possibility that marine mammals close to an airgun array might incur TTS, there has been further speculation about the possibility that some individuals occurring very close to airguns might incur PTS. Single or occasional occurrences of mild TTS are not indicative of permanent auditory damage in terrestrial mammals. Relationships between TTS and PTS thresholds have not been studied in marine mammals, but are assumed to be similar to those in humans and other terrestrial mammals.

While the number of potential incidental harassment takes will depend on the distribution and abundance of marine mammals (which vary annually due to variable ice conditions and other factors) in the area of seismic operations, the number of potential harassment takings is estimated to be small (less than one percent of any of the estimated population sizes) and has been mitigated to the lowest level practicable through incorporation of the measures mentioned previously in this document.

In addition, NMFS has determined that the location for seismic activity in the Beaufort Sea meets the statutory requirement for the activity to identify the ''specific geographical region'' within which it will operate. With regards to dates for the activity, BPXA intends to work beginning the second week of July and ceasing activity on August 25.

Finally, NMFS has determined that the seismic activity by BPXA in the Beaufort Sea in 2008 will not have an unmitigable adverse impact on the availability of marine mammals for subsistence uses. This determination is supported by the information in this **Federal Register** Notice, including: (1) activities will cease prior to the fall bowhead whale hunt in the Beaufort Sea; (2) the CAA and IHA conditions will significantly reduce impacts on subsistence hunters to ensure that there will not be an unmitigable adverse impact on subsistence uses of marine mammals; (3) because ringed seals are hunted mainly from October through June, although they are available year-round; however, the seismic survey will not occur during the primary period when these seals are typically harvested; and (4) the main seal hunts that occur during the open water season occur in areas farther west than the Liberty Prospect, so it should not conflict with harvest activities.

Authorization

As a result of these determinations, NMFS has issued an IHA to BPXA for conducting a seismic survey in the Liberty Prospect, Foggy Island Bay, Beaufort Sea in 2008, provided the previously mentioned mitigation, monitoring, and reporting requirements are incorporated.

Dated: July 8, 2008.

Helen M. Golde,

Deputy Director, Office of Protected Resources, National Marine Fisheries Service.

[FR Doc. E8–15962 Filed 7–14–08; 8:45 am]

BILLING CODE 3510–22–S

CORPORATION FOR NATIONAL AND COMMUNITY SERVICE

Proposed Information Collection; Submission for OMB Review; Comment Request

AGENCY: Corporation for National and Community Service.

ACTION: Notice.

SUMMARY: The Corporation for National and Community Service (hereinafter the ''Corporation''), has submitted a public information collection request (ICR) entitled Learn and Serve America Application Instructions to the Office of Management and Budget (OMB) for review and approval in accordance with the Paperwork Reduction Act of 1995 (Pub. L. 104–13), (44 U.S.C. Chapter 35). A copy of the ICR, with applicable supporting documentation, may be obtained by calling the Corporation for National and Community Service, Cara Patrick, 202–606–6905 (*cpatrick@cns.gov*). Individuals who use a telecommunications device for the deaf (TTY–TDD) may call (202) 565–2799 between 8:30 a.m. and 5 p.m. Eastern time, Monday through Friday.

ADDRESSES: Comments may be submitted, identified by the title of the information collection activity, to the Office of information and Regulatory Affairs, Attn: Ms. Katherine Astrich,

OMB Desk Office for the Corporation for National and community Service, by any of the following two methods within 30 days from the date of publication in this **Federal Register** .

(1) *By fax to:* (202) 395–6974, Attention: Ms. Katherine Astrich, OMB Desk Officer for the Corporation for National and Community Service; and

(2) *Electronically by e-mail to: Katherine_T._Astrich@omb.eop.gov* .

SUPPLEMENTARY INFORMATION: The OMB is particularly interested in comments which:

- Evaluate whether the proposed collection of information is necessary for the proper performance of the functions of the Corporation, including whether the information will have practical utility;
- Evaluate the accuracy of the Corporation's estimate of the burden of the proposed collection of information, including the validity of the methodology and assumptions used;
- Propose ways to enhance the quality, utility and clarity of the information to be collected; and
- Propose ways to minimize the burden of the collection of information on those who are to respond, including the use of appropriate automated, electronic, mechanical, or other technological collection techniques or other forms of information technology, e.g., permitting electronic submissions of responses.

Comments

A 60-day public comment Notice was published in the **Federal Register** on April 2, 2008. This comment period ended on June 2, 2008. No comments were received.

Description: The Corporation is seeking approval for the renewal of the Learn and Serve America Application Instructions used for grant competitions and continuation funding requests. The application is completed electronically using eGrants, the Corporation's web-based grants management system. Applicants respond to the questions included in these instructions in order to apply for funding through Learn and Serve America competitions.

Type of Review: Renewal.

Agency: Corporation for National and Community Service.

Title: Learn and Serve America Application Instructions.

OMB Number: 3045–0045 for Learn and Serve America School and Community-Based Application Instructions and 3045–0046 for Learn and Serve America Higher Education Instructions.

Affected Public: Current/prospective recipients of Learn and Serve America funding.

Total Respondents: 900.

Frequency: Annually, depending upon the availability of appropriations.

Average Time Per Response: Averages 8 hours.

Estimated Total Burden Hours: 7,200 hours.

Total Burden Cost (capital/startup): None.

Total Burden Cost (operating/maintenance): None.

Dated: July 9, 2008.

Amy Cohen,

Director, Learn and Serve America.

[FR Doc. E8–16164 Filed 7–14–08; 8:45 am]

BILLING CODE 6050–$$–P

DEPARTMENT OF EDUCATION

Notice of Proposed Information Collection Requests

AGENCY: Department of Education.

SUMMARY: The IC Clearance Official, Regulatory Information Management Services, Office of Management, invites comments on the proposed information collection requests as required by the Paperwork Reduction Act of 1995.

DATES: Interested persons are invited to submit comments on or before September 15, 2008.

SUPPLEMENTARY INFORMATION: Section 3506 of the Paperwork Reduction Act of 1995 (44 U.S.C. Chapter 35) requires that the Office of Management and Budget (OMB) provide interested Federal agencies and the public an early opportunity to comment on information collection requests. OMB may amend or waive the requirement for public consultation to the extent that public participation in the approval process would defeat the purpose of the information collection, violate State or Federal law, or substantially interfere with any agency's ability to perform its statutory obligations. The IC Clearance Official, Regulatory Information Management Services, Office of Management, publishes that notice containing proposed information collection requests prior to submission of these requests to OMB. Each proposed information collection, grouped by office, contains the following: (1) Type of review requested, e.g. new, revision, extension, existing or reinstatement; (2) Title; (3) Summary of the collection; (4) Description of the need for, and proposed use of, the information; (5) Respondents and frequency of collection; and (6) Reporting and/or Recordkeeping burden. OMB invites public comment.

The Department of Education is especially interested in public comment addressing the following issues: (1) Is this collection necessary to the proper functions of the Department; (2) will this information be processed and used in a timely manner; (3) is the estimate of burden accurate; (4) how might the Department enhance the quality, utility, and clarity of the information to be collected; and (5) how might the Department minimize the burden of this collection on the respondents, including through the use of information technology.

Dated: July 9, 2008.

Angela C. Arrington,

IC Clearance Official, Regulatory Information Management Services, Office of Management.

Institute of Education Sciences

Type of Review: New.

Title: Individuals with Disabilities Education Act (IDEA) 2004 National Assessment Implementation Study (NAIS).

Frequency: One time.

Affected Public: State, Local, or Tribal Gov't, SEAs or LEAs.

Reporting and Recordkeeping Hour Burden:

Responses: 541.

Burden Hours: 1,021.

Abstract: The current reauthorization of IDEA (2004) instructs the Department of Education to carry out a National Assessment of the law to measure: (1) Progress in the implementation of IDEA 2004; and (2) the relative effectiveness of the law in achieving its purposes. The IDEA National Assessment Implementation Study (NAIS) will inform the National Assessment by providing a representative, national picture of the implementation of early intervention and special education policies and practices at the state and district levels with a focus on new provisions included in IDEA 2004. Data collection will include three surveys of state administrators: (1) All State Part B administrators responsible for programs providing special education services to school aged children with disabilities (6–21); (2) all State 619 coordinators who oversee preschool programs for children with disabilities ages 3–5, and; (3) all State IDEA Part C coordinators who are responsible for early intervention programs serving infants and toddlers. A fourth survey will collect district level data from a nationally representative sample of local special education administrators about preschool and school-age programs for children with disabilities ages 3–21. The

U.S. Department of Education has commissioned Abt Associates to conduct this study.

Requests for copies of the proposed information collection request may be accessed from *http://edicsweb.ed.gov,* by selecting the ''Browse Pending Collections'' link and by clicking on link number 3753. When you access the information collection, click on ''Download Attachments'' to view. Written requests for information should be addressed to U.S. Department of Education, 400 Maryland Avenue, SW., LBJ, Washington, DC 20202–4537. Requests may also be electronically mailed to *ICDocketMgr@ed.gov* or faxed to 202–401–0920. Please specify the complete title of the information collection when making your request.

Comments regarding burden and/or the collection activity requirements should be electronically mailed to *ICDocketMgr@ed.gov.* Individuals who use a telecommunications device for the deaf (TDD) may call the Federal Information Relay Service (FIRS) at 1–800–877–8339.

[FR Doc. E8–16086 Filed 7–14–08; 8:45 am]

BILLING CODE 4000–01–P

DEPARTMENT OF EDUCATION

Notice of Proposed Information Collection Requests

AGENCY: Department of Education.

SUMMARY: The IC Clearance Official, Regulatory Information Management Services, Office of Management, invites comments on the proposed information collection requests as required by the Paperwork Reduction Act of 1995.

DATES: Interested persons are invited to submit comments on or before September 15, 2008.

SUPPLEMENTARY INFORMATION: Section 3506 of the Paperwork Reduction Act of 1995 (44 U.S.C. Chapter 35) requires that the Office of Management and Budget (OMB) provide interested Federal agencies and the public an early opportunity to comment on information collection requests. OMB may amend or waive the requirement for public consultation to the extent that public participation in the approval process would defeat the purpose of the information collection, violate State or Federal law, or substantially interfere with any agency's ability to perform its statutory obligations. The IC Clearance Official, Regulatory Information Management Services, Office of Management, publishes the notice containing proposed information collection requests prior to submission of these requests to OMB. Each proposed information collection, grouped by office, contains the following: (1) Type of review requested, e.g. new, revision, extension, existing or reinstatement; (2) Title; (3) Summary of the collection; (4) Description of the need for, and proposed use of, the information; (5) Respondents and frequency of collection; and (6) Reporting and/or Recordkeeping burden. OMB invites public comment.

The Department of Education is especially interested in public comment addressing the following issues: (1) Is this collection necessary to the proper functions of the Department; (2) will this information be processed and used in a timely manner; (3) is the estimate of burden accurate; (4) how might the Department enhance the quality, utility, and clarity of the information to be collected; and (5) how might the Department minimize the burden of this collection on the respondents, including through the use of information technology.

Dated: July 9, 2008.

Angela C. Arrington,

IC Clearance Official, Regulatory Information Management Services, Office of Management.

Office of Special Education and Rehabilitative Services

Type of Review: New.

Title: Annual Progress Report for the Access to Telework Program Under the Rehabilitation Act of 1973, as Amended.

Frequency: Annually.

Affected Public: Individuals or household; Not-for-profit institutions; Federal Government; State, Local, or Tribal Gov't, SEAs or LEAs

Reporting and Recordkeeping Hour Burden:

Responses: 19.

Burden Hours: 238.

Abstract: Nineteen states currently have Access to Telework programs that provide financial loans to individuals with disabilities for the purchase of computers and other equipment that support teleworking for an employer or self-employment on a full or part-time basis. These grantees are required to report annual data on their programs to the Rehabilitation Services Administration. This information collection provides a standard format for the submission of those annual performance reports and a follow-up survey to be administered to individuals who receive loans.

Requests for copies of the proposed information collection request may be accessed from *http://edicsweb.ed.gov*, by selecting the ''Browse Pending Collections'' link and by clicking on link number 3757. When you access the information collection, click on ''Download Attachments'' to view. Written requests for information should be addressed to U.S. Department of Education, 400 Maryland Avenue, SW., LBJ, Washington, DC 20202–4537. Requests may also be electronically mailed to *ICDocketMgr@ed.gov* or faxed to 202–401–0920. Please specify the complete title of the information collection when making your request.

Comments regarding burden and/or the collection activity requirements should be electronically mailed to *ICDocketMgr@ed.gov*. Individuals who use a telecommunications device for the deaf (TDD) may call the Federal Information Relay Service (FIRS) at 1–800–877–8339.

[FR Doc. E8–16087 Filed 7–14–08; 8:45 am]

BILLING CODE 4000–01–P

DEPARTMENT OF EDUCATION

Submission for OMB Review; Comment Request

AGENCY: Department of Education.

SUMMARY: The IC Clearance Official, Regulatory Information Management Services, Office of Management invites comments on the submission for OMB review as required by the Paperwork Reduction Act of 1995.

DATES: Interested persons are invited to submit comments on or before August 14, 2008.

ADDRESSES: Written comments should be addressed to the Office of Information and Regulatory Affairs, Attention: Education Desk Officer, Office of Management and Budget, 725 17th Street, NW., Room 10222, Washington, DC 20503. Commenters are encouraged to submit responses electronically by e-mail to *oira_submission@omb.eop.gov* or via fax to (202) 395–6974. Commenters should include the following subject line in their response ''Comment: [insert OMB number], [insert abbreviated collection name, e.g., ''Upward Bound Evaluation'']. Persons submitting comments electronically should not submit paper copies.

SUPPLEMENTARY INFORMATION: Section 3506 of the Paperwork Reduction Act of 1995 (44 U.S.C. Chapter 35) requires that the Office of Management and Budget (OMB) provide interested Federal agencies and the public an early opportunity to comment on information collection requests. OMB may amend or waive the requirement for public consultation to the extent that public participation in the approval process

would defeat the purpose of the information collection, violate State or Federal law, or substantially interfere with any agency's ability to perform its statutory obligations. The IC Clearance Official, Regulatory Information Management Services, Office of Management, publishes the notice containing proposed information collection requests prior to submission of these requests to OMB. Each proposed information collection, grouped by office, contains the following: (1) Type of review requested, e.g. new, revision, extension, existing or reinstatement; (2) Title; (3) Summary of the collection; (4) Description of the need for, and proposed use of, the information; (5) Respondents and frequency of collection; and (6) Reporting and/or Recordkeeping burden. OMB invites public comment.

Dated: July 9, 2008.

Angela C. Arrington,

IC Clearance Official, Regulatory Information Management Services, Office of Management.

Institute of Education Sciences

Type of Review: New.

Title: High School Completion Validation Study.

Frequency: One time.

Affected Public: Individuals or household; State, Local, or Tribal Gov't, SEAs or LEAs.

Reporting and Recordkeeping Hour Burden:

Responses: 5,130.

Burden Hours: 1,845.

Abstract: This study will be conducted as a part of the October Current Population Survey October education supplement. The purpose is to confirm the accuracy of reporting by household respondents of high school graduation status of household members by contacting reported school from which household members ages 18 to 24 were reported graduating.

Requests for copies of the information collection submission for OMB review may be accessed from *http://edicsweb.ed.gov,* by selecting the ''Browse Pending Collections'' link and by clicking on link number 3678. When you access the information collection, click on ''Download Attachments'' to view. Written requests for information should be addressed to U.S. Department of Education, 400 Maryland Avenue, SW., LBJ, Washington, DC 20202–4537. Requests may also be electronically mailed to *ICDocketMgr@ed.gov* or faxed to 202–401–0920. Please specify the complete title of the information collection when making your request.

Comments regarding burden and/or the collection activity requirements should be electronically mailed to *ICDocketMgr@ed.gov.* Individuals who use a telecommunications device for the deaf (TDD) may call the Federal Information Relay Service (FIRS) at 1–800–877–8339.

[FR Doc. E8–16089 Filed 7–14–08; 8:45 am]

BILLING CODE 4000–01–P

DEPARTMENT OF EDUCATION

Office of Special Education and Rehabilitative Services Overview Information; National Institute on Disability and Rehabilitation Research (NIDRR)—Disability and Rehabilitation Research Projects and Centers Program—Rehabilitation Engineering Research Centers (RERCs)—Technologies for Successful Aging With Disability

Notice inviting applications for a new award for fiscal year (FY) 2008.

Catalog of Federal Domestic Assistance (CFDA) Number: 84.133E–8.

DATES: *Applications Available:* July 15, 2008.

Date of Pre-Application Meeting: July 30, 2008.

Deadline for Transmittal of Applications: August 29, 2008.

Full Text of Announcement

I. Funding Opportunity Description

Purpose of Program: The purpose of the RERC program is to improve the effectiveness of services authorized under the Rehabilitation Act of 1973, as amended, by conducting advanced engineering research and development on innovative technologies that are designed to solve particular rehabilitation problems or remove environmental barriers. RERCs also demonstrate and evaluate such technologies, facilitate service delivery system changes, stimulate the production and distribution of new technologies and equipment in the private sector, and provide training opportunities.

Additional information on the RERC program can be found at: *http://www.ed.gov/rschstat/research/pubs/res-program.html#RERC.*

Priority: NIDRR has established a priority for this competition. The RERC for *Technologies for Successful Aging With Disability* priority is from the notice of final priority for the Disability and Rehabilitation Research Projects and Centers Program, published elsewhere in this issue of the **Federal Register**.

Absolute Priority: For FY 2008, this priority is an absolute priority. Under 34 CFR 75.105©(3) we consider only applications that meet this priority.

This priority is:

Technologies for Successful Aging With Disability. Program Authority: 29 U.S.C. 762(g) and 764(b)(3).

Applicable Regulations: (a) The Education Department General Administrative Regulations (EDGAR) in 34 CFR parts 74, 75, 77, 80, 81, 82, 84, 85, 86, and 97. (b) The regulations for this program in 34 CFR part 350. (c) The notice of final priority for the Disability and Rehabilitation Research Projects and Centers Program, published elsewhere in this issue of the **Federal Register**.

Note: The regulations in 34 CFR part 86 apply to institutions of higher education (IHEs) only.

II. Award Information

Type of Award: Discretionary grants.

Estimated Available Funds: $950,000.

Maximum Award: We will reject any application that proposes a budget exceeding $950,000 for a single budget period of 12 months. The Assistant Secretary for Special Education and Rehabilitative Services may change the maximum amount through a notice published in the **Federal Register**.

Note: The maximum amount includes direct and indirect costs.

Estimated Number of Awards: 1.

Note: The Department is not bound by any estimates in this notice.

Project Period: Up to 60 months.

III. Eligibility Information

1. *Eligible Applicants:* States; public or private agencies, including for-profit agencies; public or private organizations, including for-profit organizations; IHEs; and Indian tribes and tribal organizations.

Note: An RERC must be operated by or in collaboration with (a) one or more IHEs or (b) one or more nonprofit organizations (34 CFR 350.31).

2. *Cost Sharing or Matching:* This competition does not require cost sharing or matching.

IV. Application and Submission Information

1. *Address to Request Application Package:* You can obtain an application package via the Internet or from the Education Publications Center (ED Pubs). To obtain a copy via the Internet, use the following address: *http://www.ed.gov/fund/grant/apply/grantapps/index.html.*

To obtain a copy from ED Pubs, write, fax, or call the following: Education

Publications Center, P.O. Box 1398, Jessup, MD 20794–1398. Telephone, *toll free:* 1–877–433–7827. *FAX:* (301) 470–1244. If you use a telecommunications device for the deaf (TDD), call, *toll free:* 1–877–576–7734.

You can contact ED Pubs at its Web site, also: *www.ed.gov/pubs/edpubs.html* or at its e-mail address: *edpubs@inet.ed.gov.*

If you request an application from ED Pubs, be sure to identify this competition as follows: CFDA Number 84.133E–8.

Individuals with disabilities can obtain a copy of the application package in an alternative format (e.g., Braille, large print, audiotape, or computer diskette) by contacting the person or team listed under *Alternative Format* in section VIII of this notice.

2. *Content and Form of Application Submission:* Requirements concerning the content of an application, together with the forms you must submit, are in the application package for this competition. *Page Limit:* The application narrative (Part III of the application) is where you, the applicant, address the selection criteria that reviewers use to evaluate your application. We recommend that you limit Part III to the equivalent of no more than 125 pages, using the following standards:

- A ''page'' is 8.5″ × 11″, on one side only, with 1″ margins at the top, bottom, and both sides.
- Double space (no more than three lines per vertical inch) all text in the application narrative. Single spacing may be used for titles, headings, footnotes, quotations, references, and captions, as well as all text in charts, tables, figures, and graphs.
- Use a font that is either 12 point or larger or no smaller than 10 pitch (characters per inch).

The recommended page limit does not apply to Part I, the cover sheet; Part II, the budget section, including the narrative budget justification; Part IV, the assurances and certifications; or the one-page abstract, the resumes, the bibliography, or the letters of support. However, the recommended page limit does apply to all of the application narrative section (Part III).

The application package will provide instructions for completing all components to be included in the application. Each application must include a cover sheet (Standard Form 424); budget requirements (ED Form 524) and narrative budget justification; other required forms; an abstract, Human Subjects narrative, Part III narrative; resumes of staff; and other related materials, if applicable.

3. *Submission Dates and Times: Applications Available:* July 15, 2008.

Date of Pre-Application Meeting: Interested parties are invited to participate in a pre-application meeting to discuss the priority and to receive information and technical assistance through individual consultation with NIDRR staff. The pre-application meeting will be held on July 30, 2008. Interested parties may participate in this meeting by conference call with NIDRR staff from the Office of Special Education and Rehabilitative Services between 1:00 p.m. and 3:00 p.m., Washington, DC time. NIDRR staff also will be available from 3:30 p.m. to 4:30 p.m., Washington, DC time, on the same day, by telephone, to provide information and technical assistance through individual consultation. For further information or to make arrangements to participate in the meeting via conference call or for an individual consultation, contact Donna Nangle, U.S. Department of Education, Potomac Center Plaza (PCP), room 6029, 550 12th Street, SW., Washington, DC 20202. *Telephone:* (202) 245–7462 or by *e-mail: Donna.Nangle@ed.gov.*

Deadline for Transmittal of Applications: August 29, 2008.

Applications for grants under this program must be submitted electronically using the Grants.gov Apply site (Grants.gov). For information (including dates and times) about how to submit your application electronically, or in paper format by mail or hand delivery if you qualify for an exception to the electronic submission requirement, please refer to section IV. 6. *Other Submission Requirements* in this notice.

We do not consider an application that does not comply with the deadline requirements.

Individuals with disabilities who need an accommodation or auxiliary aid in connection with the application process should contact the person listed under **FOR FURTHER INFORMATION CONTACT** in section VII in this notice. If the Department provides an accommodation or auxiliary aid to an individual with a disability in connection with the application process, the individual's application remains subject to all other requirements and limitations in this notice.

4. *Intergovernmental Review:* This program is not subject to Executive Order 12372 and the regulations in 34 CFR part 79.

5. *Funding Restrictions:* We reference regulations outlining funding restrictions in the *Applicable Regulations* section in this notice.

6. *Other Submission Requirements:* Applications for grants under this competition must be submitted electronically unless you qualify for an exception to this requirement in accordance with the instructions in this section.

a. *Electronic Submission of Applications.*

Applications for grants under the Rehabilitation Engineering Research Centers competition, CFDA number 84.133E–8, must be submitted electronically using the Governmentwide Grants.gov Apply site at *http://www.Grants.gov.* Through this site, you will be able to download a copy of the application package, complete it offline, and then upload and submit your application. You may not e-mail an electronic copy of a grant application to us.

We will reject your application if you submit it in paper format unless, as described elsewhere in this section, you qualify for one of the exceptions to the electronic submission requirement and submit, no later than two weeks before the application deadline date, a written statement to the Department that you qualify for one of these exceptions. Further information regarding calculation of the date that is two weeks before the application deadline date is provided later in this section under Exception to Electronic Submission Requirement.

You may access the electronic grant application for the Rehabilitation Engineering Research Centers competition—CFDA number 84.133E–8 at *http://www.Grants.gov.* You must search for the downloadable application package for this competition by the CFDA number. Do not include the CFDA number's alpha suffix in your search (e.g., search for 84.133, not 84.133E).

Please note the following:

- When you enter the Grants.gov site, you will find information about submitting an application electronically through the site, as well as the hours of operation.
- Applications received by Grants.gov are date and time stamped. Your application must be fully uploaded and submitted and must be date and time stamped by the Grants.gov system no later than 4:30:00 p.m., Washington, DC time, on the application deadline date. Except as otherwise noted in this section, we will not accept your application if it is received—that is, date and time stamped by the Grants.gov system—after 4:30:00 p.m., Washington, DC time, on the application deadline date. We do not consider an application that does not comply with the deadline

requirements. When we retrieve your application from Grants.gov, we will notify you if we are rejecting your application because it was date and time stamped by the Grants.gov system after 4:30:00 p.m., Washington, DC time, on the application deadline date.

• The amount of time it can take to upload an application will vary depending on a variety of factors, including the size of the application and the speed of your Internet connection. Therefore, we strongly recommend that you do not wait until the application deadline date to begin the submission process through Grants.gov.

• You should review and follow the Education Submission Procedures for submitting an application through Grants.gov that are included in the application package for this competition to ensure that you submit your application in a timely manner to the Grants.gov system. You can also find the Education Submission Procedures pertaining to Grants.gov at *http://e-Grants.ed.gov/help/GrantsgovSubmissionProcedures.pdf.*

• To submit your application via Grants.gov, you must complete all steps in the Grants.gov registration process (see *http://www.grants.gov/applicants/get_registered.jsp*). These steps include (1) registering your organization, a multi-part process that includes registration with the Central Contractor Registry (CCR); (2) registering yourself as an Authorized Organization Representative (AOR); and (3) getting authorized as an AOR by your organization. Details on these steps are outlined in the Grants.gov 3-Step Registration Guide (see *http://www.grants.gov/section910/Grants.govRegistrationBrochure.pdf*). You also must provide on your application the same D-U-N-S Number used with this registration. Please note that the registration process may take five or more business days to complete, and you must have completed all registration steps to allow you to submit successfully an application via Grants.gov. In addition you will need to update your CCR registration on an annual basis. This may take three or more business days to complete.

• You will not receive additional point value because you submit your application in electronic format, nor will we penalize you if you qualify for an exception to the electronic submission requirement, as described elsewhere in this section, and submit your application in paper format.

• You must submit all documents electronically, including all information you typically provide on the following forms: Application for Federal Assistance (SF 424), the Department of Education Supplemental Information for SF 424, Budget Information—Non-Construction Programs (ED 524), and all necessary assurances and certifications. Please note that two of these forms—the SF 424 and the Department of Education Supplemental Information for SF 424—have replaced the ED 424 (Application for Federal Education Assistance).

• You must attach any narrative sections of your application as files in a .DOC (document), .RTF (rich text), or .PDF (Portable Document) format. If you upload a file type other than the three file types specified in this paragraph or submit a password-protected file, we will not review that material.

• Your electronic application must comply with any page-limit requirements described in this notice.

• After you electronically submit your application, you will receive from Grants.gov an automatic notification of receipt that contains a Grants.gov tracking number. (This notification indicates receipt by Grants.gov only, not receipt by the Department.) The Department then will retrieve your application from Grants.gov and send a second notification to you by e-mail. This second notification indicates that the Department has received your application and has assigned your application a PR/Award number (an ED-specified identifying number unique to your application).

• We may request that you provide us original signatures on forms at a later date.

Application Deadline Date Extension in Case of Technical Issues with the Grants.gov System: If you are experiencing problems submitting your application through Grants.gov, please contact the Grants.gov Support Desk, toll free, at 1–800–518–4726. You must obtain a Grants.gov Support Desk Case Number and must keep a record of it.

If you are prevented from electronically submitting your application on the application deadline date because of technical problems with the Grants.gov system, we will grant you an extension until 4:30:00 p.m., Washington, DC, time, the following business day to enable you to transmit your application electronically or by hand delivery. You also may mail your application by following the mailing instructions described elsewhere in this notice.

If you submit an application after 4:30:00 p.m., Washington, DC time, on the application deadline date, please contact the person listed under **FOR FURTHER INFORMATION CONTACT** in section VII in this notice and provide an explanation of the technical problem you experienced with Grants.gov, along with the Grants.gov Support Desk Case Number. We will accept your application if we can confirm that a technical problem occurred with the Grants.gov system and that that problem affected your ability to submit your application by 4:30:00 p.m., Washington, DC time, on the application deadline date. The Department will contact you after a determination is made on whether your application will be accepted.

Note: The extensions to which we refer in this section apply only to the unavailability of, or technical problems with, the Grants.gov system. We will not grant you an extension if you failed to fully register to submit your application to Grants.gov before the application deadline date and time or if the technical problem you experienced is unrelated to the Grants.gov system.

Exception to Electronic Submission Requirement: You qualify for an exception to the electronic submission requirement, and may submit your application in paper format, if you are unable to submit an application through the Grants.gov system because—

• You do not have access to the Internet; or

• You do not have the capacity to upload large documents to the Grants.gov system; *and*

• No later than two weeks before the application deadline date (14 calendar days or, if the fourteenth calendar day before the application deadline date falls on a Federal holiday, the next business day following the Federal holiday), you mail or fax a written statement to the Department, explaining which of the two grounds for an exception prevent you from using the Internet to submit your application.

If you mail your written statement to the Department, it must be postmarked no later than two weeks before the application deadline date. If you fax your written statement to the Department, we must receive the faxed statement no later than two weeks before the application deadline date.

Address and mail or fax your statement to: Donna Nangle, U.S. Department of Education, 400 Maryland Avenue, SW., room 6029, PCP, Washington, DC 20202–2700. FAX: (202) 245–7593.

Your paper application must be submitted in accordance with the mail or hand delivery instructions described in this notice.

b. *Submission of Paper Applications by Mail.*

If you qualify for an exception to the electronic submission requirement, you may mail (through the U.S. Postal

Service or a commercial carrier) your application to the Department. You must mail the original and two copies of your application, on or before the application deadline date, to the Department at the applicable following address:

By mail through the U.S. Postal Service: U.S. Department of Education, Application Control Center, Attention: (CFDA number 84.133E–8), 400 Maryland Avenue, SW., Washington, DC 20202–4260. or

By mail through a commercial carrier: U.S. Department of Education, Application Control Center, Stop 4260, Attention: (CFDA number 84.133E–8), 7100 Old Landover Road, Landover, MD 20785–1506.

Regardless of which address you use, you must show proof of mailing consisting of one of the following:

(1) A legibly dated U.S. Postal Service postmark.

(2) A legible mail receipt with the date of mailing stamped by the U.S. Postal Service.

(3) A dated shipping label, invoice, or receipt from a commercial carrier.

(4) Any other proof of mailing acceptable to the Secretary of the U.S. Department of Education.

If you mail your application through the U.S. Postal Service, we do not accept either of the following as proof of mailing:

(1) A private metered postmark.

(2) A mail receipt that is not dated by the U.S. Postal Service.

If your application is postmarked after the application deadline date, we will not consider your application.

Note: The U.S. Postal Service does not uniformly provide a dated postmark. Before relying on this method, you should check with your local post office.

c. *Submission of Paper Applications by Hand Delivery.*

If you qualify for an exception to the electronic submission requirement, you (or a courier service) may deliver your paper application to the Department by hand. You must deliver the original and two copies of your application by hand, on or before the application deadline date, to the Department at the following address: U.S. Department of Education, Application Control Center, Attention: (CFDA number 84.133E–8), 550 12th Street, SW., Room 7041, Potomac Center Plaza, Washington, DC 20202–4260.

The Application Control Center accepts hand deliveries daily between 8:00 a.m. and 4:30 p.m., Washington, DC time, except Saturdays, Sundays, and Federal holidays.

Note for Mail or Hand Delivery of Paper Applications : If you mail or hand deliver your application to the Department—

(1) You must indicate on the envelope and—if not provided by the Department—in Item 11 of the SF 424 the CFDA number, including suffix letter, if any, of the competition under which you are submitting your application; and

(2) The Application Control Center will mail to you a notification of receipt of your grant application. If you do not receive this notification within 15 business days from the application deadline date, you should call the U.S. Department of Education Application Control Center at (202) 245–6288.

V. Application Review Information

1. *Selection Criteria:* The selection criteria for this competition are from 34 CFR 350.54 and are listed in the application package.

2. *Review and Selection Process:* Additional factors we consider in selecting an application for an award are as follows:

The Secretary is interested in outcomes-oriented research or development projects that use rigorous scientific methodologies. To address this interest, applicants are encouraged to articulate goals, objectives, and expected outcomes for the proposed research or development activities. Proposals should describe how results and planned outputs are expected to contribute to advances in knowledge, improvements in policy and practice, and public benefits for individuals with disabilities. Applicants should propose projects that are designed to be consistent with these goals. We encourage applicants to include in their application a description of how results will measure progress towards achievement of anticipated outcomes (including a discussion of measures of effectiveness), the mechanisms that will be used to evaluate outcomes associated with specific problems or issues, and how the proposed activities will support new intervention approaches and strategies. Submission of the information identified in this section V. 2. *Review and Selection Process* is voluntary, except where required by the selection criteria listed in the application package.

VI. Award Administration Information

1. *Award Notices:* If your application is successful, we notify your U.S. Representative and U.S. Senators and send you a Grant Award Notification (GAN). We may notify you informally, also.

If your application is not evaluated or not selected for funding, we notify you.

2. *Administrative and National Policy Requirements:* We identify administrative and national policy requirements in the application package and reference these and other requirements in the *Applicable Regulations* section in this notice.

We reference the regulations outlining the terms and conditions of an award in the *Applicable Regulations* section in this notice and include these and other specific conditions in the GAN. The GAN also incorporates your approved application as part of your binding commitments under the grant.

3. *Reporting:* At the end of your project period, you must submit a final performance report, including financial information, as directed by the Secretary. If you receive a multi-year award, you must submit an annual performance report that provides the most current performance and financial expenditure information as directed by the Secretary under 34 CFR 75.118. The Secretary may also require more frequent performance reports under 34 CFR 75.720(c). For specific requirements on reporting, please go to *http://www.ed.gov/fund/grant/apply/appforms/appforms.html.*

Note: NIDRR will provide information by letter to grantees on how and when to submit the final performance report.

4. *Performance Measures:* To evaluate the overall success of its research program, NIDRR assesses the quality of its funded projects through review of grantee performance and products. Each year, NIDRR examines a portion of its grantees to determine:

- The percentage of newly-awarded NIDRR projects that are multi-site, collaborative, controlled studies of interventions and programs.
- The number of accomplishments (e.g., new or improved tools, methods, discoveries, standards, interventions, programs, or devices) developed or tested with NIDRR funding that have been judged by expert panels to be of high quality and to advance the field.
- The number of new or improved NIDRR-funded assistive and universally designed technologies, products, and devices transferred to industry for potential commercialization.
- The average number of publications per award based on NIDRR-funded research and development activities in refereed journals.
- The percentage of new grants that include studies funded by NIDRR that assess the effectiveness of interventions, programs, and devices using rigorous methods.

NIDRR uses information submitted by grantees as part of their Annual Performance Reports (APRs) in support of these performance measures.

Updates on the Government Performance and Results Act of 1993

(GPRA) indicators, revisions, and methods appear on the NIDRR Program Review Web site: *http://www.neweditions.net/pr/commonfiles/pmconcepts.htm.*

Grantees should consult this site on a regular basis to obtain details and explanations on how NIDRR programs contribute to the advancement of the Department's long-term and annual performance goals.

VII. Agency Contact

FOR FURTHER INFORMATION CONTACT: Donna Nangle, U.S. Department of Education, 400 Maryland Avenue, SW., Room 6029, PCP, Washington, DC 20202. *Telephone:* (202) 245–7462 or by *e-mail: Donna.Nangle@ed.gov.*

If you use a TDD, call the Federal Relay Service (FRS), toll free, at 1–800–877–8339.

VIII. Other Information

Alternative Format: Individuals with disabilities can obtain this document and a copy of the application package in an alternative format (e.g., Braille, large print, audiotape, or computer diskette) by contacting the Grants and Contracts Services Team, U.S. Department of Education, 400 Maryland Avenue, SW., Room 5075, PCP, Washington, DC 20202–2550. *Telephone:* (202) 245–7363. If you use a TDD, call the FRS, toll-free, at 1–800–877–8339.

Electronic Access to This Document: You can view this document, as well as all other documents of this Department published in the **Federal Register**, in text or Adobe Portable Document Format (PDF) on the Internet at the following site: *www.ed.gov/news/fedregister.*

To use PDF you must have Adobe Acrobat Reader, which is available free at this site. If you have questions about using PDF, call the U.S. Government Printing Office (GPO), toll free, at 1–888–293–6498; or in the Washington, DC, area at (202) 512–1530.

Note: The official version of this document is the document published in the **Federal Register**. Free Internet access to the official edition of the **Federal Register** and the Code of Federal Regulations is available on GPO Access at: *www.gpoaccess.gov/nara/index.html.*

Dated: July 10, 2008.

Tracy R. Justesen,

Assistant Secretary for Special Education and Rehabilitative Services.

[FR Doc. E8–16116 Filed 7–14–08; 8:45 am]

BILLING CODE 4000–01–P

DEPARTMENT OF EDUCATION

National Institute on Disability and Rehabilitation Research—Disability and Rehabilitation Research Projects and Centers Program—Rehabilitation Engineering Research Centers (RERCs)—Technologies for Successful Aging With Disability

AGENCY: Office of Special Education and Rehabilitative Services, Department of Education.

ACTION: Notice of final priority for an RERC.

SUMMARY: The Assistant Secretary for Special Education and Rehabilitative Services announces a priority for an RERC for Technologies for Successful Aging With Disability under the Disability and Rehabilitation Research Projects and Centers Program administered by the National Institute on Disability and Rehabilitation Research (NIDRR). The Assistant Secretary may use this priority for competitions in fiscal year (FY) 2008 and later years. We take this action to focus research attention on areas of national need. We intend this priority to improve rehabilitation services and outcomes for individuals with disabilities.

DATES: *Effective Date:* This priority is effective August 14, 2008.

FOR FURTHER INFORMATION CONTACT: Donna Nangle, U.S. Department of Education, 400 Maryland Avenue, SW., Room 6029, Potomac Center Plaza (PCP), Washington, DC 20202–2700. *Telephone:* (202) 245–7462 or by *e-mail: donna.nangle@ed.gov.*

If you use a telecommunications device for the deaf (TDD), call the Federal Relay Service (FRS) at 1–800–877–8339.

Individuals with disabilities can obtain this document in an alternative format (e.g., Braille, large print, audiotape, or computer diskette) on request to the contact person listed under **FOR FURTHER INFORMATION CONTACT**.

SUPPLEMENTARY INFORMATION:

Rehabilitation Engineering Research Centers Program

The purpose of the RERC program is to improve the effectiveness of services authorized under the Rehabilitation Act of 1973, as amended, by conducting advanced engineering research and development on innovative technologies that are designed to solve particular rehabilitation problems or remove environmental barriers. RERCs also demonstrate and evaluate such technologies, facilitate service delivery system changes, stimulate the production and distribution of new technologies and equipment in the private sector, and provide training opportunities.

General Requirements of RERCs

RERCs carry out research or demonstration activities in support of the Rehabilitation Act of 1973, as amended, by—

- Developing and disseminating innovative methods of applying advanced technology, scientific achievement, and psychological and social knowledge to: (a) Solve rehabilitation problems and remove environmental barriers; and (b) study and evaluate new or emerging technologies, products, or environments and their effectiveness and benefits; or
- Demonstrating and disseminating: (a) Innovative models for the delivery of cost-effective rehabilitation technology services to rural and urban areas; and (b) other scientific research to assist in meeting the employment and independent living needs of individuals with severe disabilities; and
- Facilitating service delivery systems change through: (a) The development, evaluation, and dissemination of consumer-responsive and individual and family-centered innovative models for the delivery to both rural and urban areas of innovative cost-effective rehabilitation technology services; and (b) other scientific research to assist in meeting the employment and independence needs of individuals with severe disabilities.

Each RERC must be operated by, or in collaboration with, one or more institutions of higher education or one or more nonprofit organizations.

Each RERC must provide training opportunities, in conjunction with institutions of higher education and nonprofit organizations, to assist individuals, including individuals with disabilities, to become rehabilitation technology researchers and practitioners.

Each RERC must emphasize the principles of universal design in its product research and development. Universal design is ''the design of products and environments to be usable by all people, to the greatest extent possible, without the need for adaptation or specialized design'' (North Carolina State University, 1997. *http://www.design.ncsu.edu/cud/about_ud/udprinciplestext.htm*).

Additional information on the RERC program can be found at: *http://www.ed.gov/rschstat/research/pubs/index.html.*

We published a notice of proposed priorities (NPP) for NIDRR's Disability and Rehabilitation Research Projects and Centers Program in the **Federal Register** on April 22, 2008 (73 FR 21607). The NPP included background statements that described our rationale for the priorities proposed in that notice. In this notice of final priority (NFP), we are announcing the final priority for the RERC—Technologies for Successful Aging With Disability, one of the priorities proposed in the NPP. We published a separate notice of final priorities for the other priorities proposed in the NPP on July 7, 2008 (73 FR 38436).

There are differences between the proposed priority for the RERC for Technologies for Successful Aging With Disability and the final priority for the RERC for Technologies for Successful Aging With Disability as discussed in the following section.

Analysis of Comments and Changes

In response to our invitation in the NPP, five parties submitted comments on the proposed priority for the RERC. An analysis of the comments and of any changes in the priority since publication of the NPP follows.

Generally, we do not address technical and other minor changes, or suggested changes the law does not authorize us to make under the applicable statutory authority. In addition, we do not address general comments that raised concerns not directly related to the proposed priority.

Comment: Two commenters asked for clarification of NIDRR's intent with respect to the limits placed on the number of research and development projects that applicants can propose under this priority. Specifically, the commenters requested that we clarify what is intended by the language in paragraph (a) of the priority, which states that the RERC must conduct no more than four rigorous research and development projects that address the needs of individuals with disabilities and that use state-of-the-art methodologies. These commenters also asked whether applicants could propose projects that include only research activities, only development activities, or both research and development activities.

Discussion: The language in paragraph (a) of the priority referenced by the commenter restricts the total number of research and development projects to be conducted by the RERC under this priority to four or fewer. We intend for this limitation to help focus the resources of the RERC and thereby increase the feasibility of the RERC's proposed activities and the likelihood of the RERC achieving its planned outcomes. We intended the language in paragraph (a) of the priority to allow applicants to propose four or fewer rigorous research and development projects, each of which could include a combination of research and development activities, or only research or only development activities.

Changes: NIDRR has revised paragraph (a) of the priority by adding the words ''a total of'' to clarify that applicants must propose no more than a total of four research and development projects. In addition, NIDRR has revised paragraph (a) of the priority to clarify that each research and development project proposed by the RERC may include a combination of research and development activities, or only research or only development activities.

Comment: Two commenters noted that this priority supports research and development activities that are designed to foster improvements in technologies, assistive technologies, technology-based products, environments, and built environments. These commenters requested clarification regarding the distinctions between these terms, and recommended that the terms be used consistently throughout the priority.

Discussion: There is no single definition of the term ''technology,'' but, as used in this priority, we intend for the term to refer to the practical application of science and knowledge generally. This broad definition of ''technology'' is intended to provide applicants under this priority with the flexibility to propose a wide range of approaches to applying, developing, modifying, testing, and evaluating technologies that promote successful aging with a disability.

We believe the terms ''technology'' and ''technologies'' encompass assistive technologies, technology-based products, and built environments. In section 3 of the Assistive Technology Act of 1998 (AT Act the term assistive technology is defined as technology that is designed to be used in an assistive technology device or assistive technology service. The AT Act defines an assistive technology device as any item, piece of equipment, or product system, whether acquired commercially, modified, or customized, that is used to increase, maintain, or improve functional capabilities of individuals with disabilities. The AT Act defines an assistive technology service as any service that directly assists an individual with a disability in the selection, acquisition, or use of an assistive technology device.

The term ''technology-based products'' is intended to refer to products that utilize practical applications of science and knowledge. The distinction between technologies and technology-based products is illustrated with a specific example. A manual wheelchair is a technology-based product that utilizes specific technologies including hand-rim design and seating systems.

The term ''built environments'' refers to man-made physical spaces such as residences, workspaces, public buildings, and facilities. ''Environment'' is a more general term and for that reason we removed that term from the priority. As recommended by the commenter, we revised the priority to use terms consistently throughout the priority.

Changes: We have replaced the term ''assistive technologies'' with the term ''technologies'' and replaced the term ''environments'' with the term ''built environments'' for accuracy and consistency within the priority.

Comment: One commenter requested that we clarify the meaning of the phrase ''utility for intended users,'' as used in paragraph (b) of the priority.

Discussion: We believe that the meaning of this phrase is clear within the context of the priority. Intended users, for purposes of this priority, are middle-aged and older adults with disabilities. Technology, technology-based products, or built environments have utility for middle-aged and older adults with disabilities to the extent that they can be used to facilitate their participation in the community.

Changes: None.

Comment: Two commenters asked for clarification regarding the intent of the first and second sentences of paragraph (d) of the priority. These commenters noted that the phrase ''transfer of RERC-developed technologies to the marketplace'' in the first sentence has a different meaning than the reference in the second sentence to making these technologies ''available to the public.'' The commenters noted that transferring tangible products to the marketplace involves manufacturing, while technologies can conceptually be made available to the public via dissemination of written information.

Discussion: The intended outcome of activities to be carried out under paragraph (d) of the priority is the increased transfer of RERC-developed technologies to the marketplace. We did not intend to de-emphasize this outcome by referring to making technologies available to the public in the second sentence of paragraph (d). However, the priority's focus on

transferring RERC-developed technologies to the marketplace does not preclude applicants from also actively disseminating their work through relevant publications.

Changes: In paragraph (d) of the priority, we have replaced the words ''made available to the public'' with the words ''transferred to the marketplace.''

Note: This notice does *not* solicit applications. In any year in which we choose to use this priority, we invite applications through a notice in the **Federal Register**. When inviting applications we designate the priorities as absolute, competitive preference, or invitational. The effect of each type of priority follows:

Absolute priority: Under an absolute priority, we consider only applications that meet the priority (34 CFR 75.105(c)(3)).

Competitive preference priority: Under a competitive preference priority, we give competitive preference to an application by either (1) awarding additional points, depending on how well or the extent to which the application meets the competitive preference priority (34 CFR 75.105(c)(2)(i)); or (2) selecting an application that meets the competitive preference priority over an application of comparable merit that does not meet the priority (34 CFR 75.105(c)(2)(ii)).

Invitational priority: Under an invitational priority, we are particularly interested in applications that meet the invitational priority. However, we do not give an application that meets the invitational priority a competitive or absolute preference over other applications (34 CFR 75.105(c)(1)).

This NFP is in concert with President George W. Bush's New Freedom Initiative (NFI) and NIDRR's Final Long-Range Plan for FY 2005–2009 (Plan). The NFI can be accessed on the Internet at the following site: *http://www.whitehouse.gov/infocus/newfreedom.*

The Plan, which was published in the **Federal Register** on February 15, 2006 (71 FR 8165), can be accessed on the Internet at the following site: *http://www.ed.gov/about/offices/list/osers/nidrr/policy.html.*

Through the implementation of the NFI and the Plan, NIDRR seeks to: (1) Improve the quality and utility of disability and rehabilitation research; (2) foster an exchange of expertise, information, and training to facilitate the advancement of knowledge and understanding of the unique needs of traditionally underserved populations; (3) determine best strategies and programs to improve rehabilitation outcomes for underserved populations; (4) identify research gaps; (5) identify mechanisms of integrating research and practice; and (6) disseminate findings.

Priority—Technologies for Successful Aging With Disability

The Assistant Secretary for Special Education and Rehabilitative Services announces a priority for the establishment of a Rehabilitation Engineering Research Center (RERC) for Technologies for Successful Aging with Disability. Under this priority, the RERC must research, evaluate, and develop new technologies and approaches, or modify and apply existing technologies and approaches that address the challenges to community participation experienced by middle-aged and older adults with disabilities in home, work, or community settings.

Under this priority, the RERC must be designed to contribute to the following outcomes:

(a) Increased technical and scientific knowledge regarding the use of technologies for successful aging with disability. The RERC must contribute to this outcome by conducting no more than a total of four rigorous research and development projects that address the needs of individuals with disabilities and that use state-of-the-art methodologies. For purposes of this priority, a rigorous research and development project may include a combination of research and development activities, or may include only research or only development activities. These rigorous research and development projects must generate measurable results and improve policy, practice, or system capacity to use technology to meet the community participation needs of individuals who are aging with disabilities, or who are aging into disability.

(b) Improved technologies, technology-based products, and built environments for successful aging with disability. The RERC must contribute to this outcome by developing new, or modifying and applying existing technologies, technology-based products, and built environments, and testing and evaluating their utility for intended users.

(c) Increased impact of research in the area of technologies for successful aging with disability. The RERC must contribute to this outcome by providing technical assistance to public and private organizations, individuals with disabilities, and employers on policies, guidelines, and standards related to the use of technologies to facilitate successful aging with disability.

(d) Increased transfer of RERC-developed technologies to the marketplace. The RERC must contribute to this outcome by developing and implementing a technology transfer plan for ensuring that technologies developed by the RERC are transferred to the marketplace. The RERC must develop its technology transfer plan in the first year of the project period in consultation with the NIDRR-funded Disability and Rehabilitation Research Project, Center on Knowledge Translation for Technology Transfer.

In addition, the RERC must—

- Have the capability to design, build, and test prototype devices and assist in the transfer of successful solutions to relevant production and service delivery settings;
- Evaluate the efficacy and safety of its new products, instrumentation, or assistive technology devices;
- Provide as part of its proposal, and then implement, a plan that describes how it will include, as appropriate, individuals with disabilities or their representatives in all phases of its activities, including research, development, training, dissemination, and evaluation;
- Provide as part of its proposal, and then implement, in consultation with the NIDRR-funded National Center for the Dissemination of Disability Research (NCDDR), a plan to disseminate its research results to individuals with disabilities, their representatives, disability organizations, service providers, professional journals, manufacturers, and other interested parties;
- Conduct a state-of-the-science conference on its designated priority research area in the fourth year of the project period, and publish a comprehensive report on the final outcomes of the conference in the fifth year of the project period; and
- Coordinate research projects of mutual interest with relevant NIDRR-funded projects, as identified through consultation with the NIDRR project officer.

Executive Order 12866

This NFP has been reviewed in accordance with Executive Order 12866. Under the terms of the order, we have assessed the potential costs and benefits of this regulatory action.

The potential costs associated with this NFP are those resulting from statutory requirements and those we have determined as necessary for administering this program effectively and efficiently.

In assessing the potential costs and benefits—both quantitative and qualitative—of this NFP, we have determined that the benefits of the final priority justify the costs.

Summary of Potential Costs and Benefits:

The benefits of the Disability and Rehabilitation Research Projects and Centers Program have been well established over the years in that similar projects have been completed successfully. This final priority will generate new knowledge and technologies through research, development, dissemination, utilization, and technical assistance projects.

Another benefit of this final priority is that the establishment of a new RERC will support the President's NFI and will improve the lives of individuals with disabilities. The new RERC will generate, disseminate, and promote the use of new information that will improve the options for individuals with disabilities to perform regular activities in the community.

Applicable Program Regulations: 34 CFR part 350.

Electronic Access to This Document

You may view this document, as well as all other Department of Education documents published in the **Federal Register**, in text or Adobe Portable Document Format (PDF) on the Internet at the following site: *www.ed.gov/news/fedregister.*

To use PDF you must have Adobe Acrobat Reader, which is available free at this site. If you have questions about using PDF, call the U.S. Government Printing Office (GPO), toll free, at 1–888–293–6498; or in the Washington, DC, area at (202) 512–1530.

Note: The official version of this document is the document published in the **Federal Register**. Free Internet access to the official edition of the **Federal Register** and the Code of Federal Regulations is available on GPO Access at: *www.gpoaccess.gov/nara/index.html.*

(Catalog of Federal Domestic Assistance Numbers 84.133E Rehabilitation Engineering Research Centers Program)

Program Authority: 29 U.S.C. 762(g), 764(a), and 764(b)(3).

Dated: July 10, 2008.

Tracy R. Justesen,

Assistant Secretary for Special Education and Rehabilitative Services.

[FR Doc. E8–16125 Filed 7–14–08; 8:45 am]

BILLING CODE 4000–01–P

DEPARTMENT OF EDUCATION

Office of Special Education and Rehabilitative Services; Overview Information; Technical Assistance and Dissemination to Improve Services and Results for Children With Disabilities; Notice Inviting Applications for New Awards for Fiscal Year (FY) 2008

Catalog of Federal Domestic Assistance (CFDA) Number: 84.326A and 84.326N.

Note: This notice invites applications for two separate competitions. For key dates, contact person information, and funding information regarding each competition, see the chart in the *Award Information* section of this notice.

Dates:

Applications Available: See chart.

Deadline for Transmittal of Applications: See chart.

Deadline for Intergovernmental Review: See chart.

Full Text of Announcement

I. Funding Opportunity Description

Purpose of Program: The purpose of the Technical Assistance and Dissemination to Improve Services and Results for Children with Disabilities program is to promote academic achievement and improve results for children with disabilities by supporting technical assistance (TA), model demonstration projects, dissemination of useful information, and implementation activities that are supported by scientifically based research.

Priorities: In accordance with 34 CFR 75.105(b)(2)(iv) and (v), these priorities are from allowable activities specified in the statute, or otherwise authorized in the statute (see sections 663 and 681(d) of the Individuals with Disabilities Education Act (IDEA)). Each of the absolute priorities announced in this notice corresponds to a separate competition as follows:

Absolute priority	Competition CFDA No.
The IDEA Partnership Project	84.326A
National Dissemination Center for Children with Disabilities	84.326N

Absolute Priorities: For FY 2008, these priorities are absolute priorities. Under 34 CFR 75.105(c)(3), for each competition, we consider only applications that meet the absolute priority for that competition.

The priorities are:

Absolute Priority 1—The IDEA Partnership Project (84.326A)

Background

The IDEA and the Elementary and Secondary Education Act of 1965 (ESEA), as amended by the No Child Left Behind Act of 2001 (NCLB), and their implementing regulations contain a number of provisions related to the instruction and assessment of, and accountability for, students with disabilities that require changes in policy and practice at many different levels of the educational service system and in both regular and special education: State and district policies must change, teachers must be trained, administrative supports must be provided, and parents must be informed. Coordinating change across regular and special education is challenging because teachers, administrators, other professionals, and parents typically differ in their training, experiences, priorities, and perspectives.

In order to support and facilitate the effective implementation of IDEA and NCLB, the Office of Special Education Programs (OSEP) has funded partnership projects that bring together representatives from national associations that have a vested interest in improving results for all students, including students with disabilities. These associations represent a wide range of interests and viewpoints in both regular and special education, including those of policymakers, local administrators, service providers, and family members. Each of these national associations has members working directly with administrators, teachers, parents, and others at the State and local levels (State and local affiliates) who are responsible for implementing the requirements of IDEA and NCLB.

An example of how partnerships with national organizations worked together to support the implementation of an instructional practice that affects both regular and special education is the work of the OSEP-funded IDEA Partnership Project's National Community of Practice on NCLB/IDEA Collaboration. The project developed TA materials for their State and local affiliates to use to facilitate and promote schools' and districts' implementation of Response to Intervention (RTI) strategies. RTI was selected because changes in policies and practices at many different levels of the special education and regular education

systems must be made to maximize the effectiveness of RTI approaches.[1]

The TA materials were designed to articulate a consistent message about RTI, using appropriate formats and content relevant to the information needed by policy makers, local administrators, service providers, and families to support effective implementation of RTI. This approach helped State and local affiliates of multiple national associations understand the core components of RTI, engage with each other in discussions about RTI, and work together to align policy with effective RTI implementation at all levels of the education system. For further information on the past work of the Partnership Project, go to *http://www.ideapartnership.org/.*

The Department seeks to fund another Partnership project to provide opportunities for national associations to collaborate with each other and with their collective State and local affiliates to improve the implementation of education policies and practices in States. These associations and their State and local affiliates need continued support to engage in meaningful dialogue and problem solving that will improve the implementation of IDEA and NCLB within States.

Priority:

The purpose of this priority is to fund a cooperative agreement to support the establishment and operation of an IDEA Partnership Project (Partnership Project) that will strengthen and unite national associations, and their State and local affiliates, representing policymakers, service providers, local-level administrators, and families to collaborate to improve the implementation of IDEA and NCLB.

To be considered for funding under this absolute priority, applicants must meet the application requirements contained in the priority. The project funded under this absolute priority also must meet the programmatic and administrative requirements specified in the priority.

Application Requirements. An applicant must include in its application—

(a) A logic model that depicts, at a minimum, the goals, activities, outputs, and outcomes of the proposed project. A logic model communicates how a project will achieve its outcomes and provides a framework for both the formative and summative evaluations of the project;

Note: For more information on logic models, the following Web site lists multiple online resources: *http://www.cdc.gov/eval/resources.htm.*

(b) A plan to implement the activities described in the *Project Activities* section of this priority;

(c) A plan, linked to the proposed project's logic model, for a formative evaluation of the proposed project's activities. The plan must describe how the formative evaluation will use clear performance objectives to ensure continuous improvement in the operation of the proposed project, including objective measures of progress in implementing the project and ensuring the quality of products and services;

(d) A budget for attendance at the following:

(1) A one and one half day kick-off meeting to be held in Washington, DC within four weeks after receipt of the award, and an annual planning meeting held in Washington, DC with the OSEP Project Officer during each subsequent year of the project period.

(2) A three-day Project Directors' Conference in Washington, DC during each year of the project period.

(3) A four-day Technical Assistance and Dissemination Conference in Washington, DC during each year of the project period.

(4) Two two-day trips annually to attend Department briefings, Department-sponsored conferences, and other meetings, as requested by OSEP; and

(e) A line item in the proposed budget for an annual set-aside of five percent of the award amount to support emerging needs that are consistent with the proposed project's activities, as those needs are identified in consultation with OSEP.

Note: With approval from the OSEP Project Officer, the Partnership Project must reallocate any remaining funds from this annual set-aside no later than the end of the third quarter of each budget period.

(f) Assurances that no financial commitments were made to any associations or membership organizations in developing this application. The Partnership Project will negotiate any financial commitments to associations during the first month of the project period with final approval by OSEP.

Project Activities. To meet the requirements of this priority, the Partnership Project, at a minimum, must conduct the following activities:

(a) Form a single partnership among national associations and their State and local affiliates that focuses on regular education and special education in order to meet the collective needs of the following four audiences:

(1) Policymakers including, but not limited to, associations of chief State school officers, State boards of education, local school boards, State directors of special education, ESEA Title I coordinators, mental health coordinators, children with special health care needs coordinators, deans of schools of education, department chairs at institutions of higher education, superintendents, governors, and State legislators.

(2) Service providers including, but not limited to, associations of regular and special education teachers, community-based providers of education services, vocational education teachers, related services providers, and paraprofessionals.

(3) Local-level administrators including, but not limited to, associations of elementary, middle, and secondary school principals; regular and special education administrators; and administrators of private schools.

(4) Families including, but not limited to, associations of parents and family members of children in regular and special education, and disability organizations representing individuals with disabilities and family members of individuals with disabilities.

(b) Establish and maintain an advisory committee to review the activities and outcomes of the Partnership Project and provide programmatic support and advice throughout the project period. At a minimum, the advisory committee must meet on an annual basis in Washington, DC, and consist of individuals representing each of the four constituency groups listed in paragraph (a) and representatives from OSEP and other federally-funded TA projects. The Partnership Project must submit the names of proposed members of the advisory committee to OSEP for approval within eight weeks after receipt of the award.

(c) Conduct a needs assessment of the partner organizations to identify their needs in relation to the implementation of IDEA and NCLB;

(d) Report results of the needs assessment to the advisory committee within the first three months of the project period.

[1] RTI is a multi-level approach that seeks to maximize student achievement. Schools provide a research-based core curriculum to all students in regular education and use universal screening to identify students at risk for poor learning outcomes. At-risk learners are provided with research-based interventions, and their progress is continuously monitored. Decisions about the intensity and nature of interventions that students receive and their potential eligibility to receive special education and related services are made based on the progress monitoring data (Hintz, 2008; National Center on Response to Intervention, 2008).

(e) Based on the results of the needs assessment and with input from the advisory committee and the partnering organizations, develop and implement a plan annually for coordinated training, TA, dissemination, and outreach to the partners' State and local affiliates. Each annual plan must address needs related to the integration and coordination of regular and special education, as well as needs identified by OSEP in reviewing State Performance Plans and Annual Performance Reports. The project's annual plan, which must be submitted to OSEP for approval prior to implementation, must include the following information:

(1) How partnering organizations will reach their members at both the State and local levels and work with them and each other to implement the plan.

(2) How specific activities in the plan will be conducted and coordinated with those of other OSEP and Office of Elementary and Secondary Education (OESE)-funded TA centers, and a timeline for implementing the activities.

(3) If the plan includes implementing research-based practices or interventions, how partner organizations will support State and local affiliates to implement those practices or interventions to effectively implement NCLB and IDEA.

(4) How trainers who are members of partner organizations will be compensated for their training time.

(5) How partners will leverage other resources to support planned activities.

(6) How the Partnership Project will serve as a broker for TA services between the partners and other OSEP and OESE TA projects.

(f) Create opportunities for the Partnership Project's partnering organizations to engage in cross-stakeholder communication, learning, and strategic planning to address the complex challenges associated with implementing IDEA and NCLB to improve results for children with disabilities.

(g) Establish the following:

(1) A Web site that meets a government or industry-recognized standard for accessibility and that links to the Web site operated by the Technical Assistance Coordination Center (TACC), which OSEP intends to fund in FY 2008.

(2) A comprehensive, up-to-date, and searchable database of partners' products and activities that is accessible to all partners.

(3) A mechanism for regularly updating partners on new developments in relevant legislation.

(h) Communicate and collaborate, on an ongoing basis, with OSEP-funded projects, including the communities of practice, the Parent Training and Information Centers, the TACC, and the National Dissemination Center for Individuals with Disabilities, which OSEP intends to fund in FY 2008. This collaboration could include the joint development of products, the coordination of TA services, and the planning and carrying out of TA meetings and events.

(i) Although product development is not a primary function of this project, comply with the following requirements, when product development is needed:

(1) If OSEP funds a TA center in the content area that is the topic of the proposed product, but no product currently exists that will meet the needs of the Partnership Project, work with the content center to develop a product that is research-based (i.e., consistent with research and theory on the topic).

(2) Prior to developing any new product, whether paper or electronic, submit to the OSEP Project Officer and the Proposed Product Advisory Board at OSEP's TACC for approval, a proposal describing the content and purpose of the product.

(3) Before submitting a draft of a product to the OSEP Project Officer, request input from individuals representing each of the four constituency groups (listed in paragraph (a)(1) through (a)(4) under *Project Activities*).

(4) Coordinate with the National Dissemination Center for Individuals with Disabilities to develop an efficient and high-quality dissemination strategy that reaches the broad audiences to be targeted by the project. The Partnership Project must report to the OSEP Project Officer the outcomes of these coordination efforts.

(j) Contribute, on an ongoing basis, updated information on the Partnership Project's services to OSEP's Technical Assistance and Dissemination Matrix (*http://matrix.rrfcnetwork.org/*), which provides current information on Department-funded TA services to a range of stakeholders.

(k) Conduct a summative evaluation of the Partnership Project in collaboration with the OSEP-funded Center to Improve Project Performance (CIPP) as described in the following paragraphs. This summative evaluation must examine the outcomes or impact of the Partnership Project's activities in order to assess the effectiveness of those activities.

Note: The major tasks of CIPP would be to guide, coordinate, and oversee the summative evaluations conducted by selected Technical Assistance, Personnel Development, Parent Training and Information Center, and Technology projects that individually receive $500,000 or more funding from OSEP annually. The efforts of CIPP are expected to enhance individual project evaluations by providing expert and unbiased assistance in designing evaluations, conducting analyses, and interpreting data.

To fulfill the requirements of the summative evaluation to be conducted under the guidance of CIPP and with the approval of the OSEP Project Officer, the Partnership Project must—

(1) Hire or designate, with the approval of the OSEP Project Officer, a project liaison staff person with sufficient dedicated time, experience in evaluation, and knowledge of the Partnership Project to work with CIPP on the following tasks: (i) Planning for the Partnership Project's summative evaluation (e.g., selecting evaluation questions, developing a timeline for the evaluation, locating sources of relevant data, and refining the logic model used for the evaluation), (ii) developing the summative evaluation design and instrumentation (e.g., determining quantitative or qualitative data collection strategies, selecting respondent samples, and pilot testing instruments), (iii) coordinating the evaluation timeline with the implementation of the Partnership Project's activities, (iv) collecting summative data, and (v) writing reports of summative evaluation findings;

(2) Cooperate with CIPP staff in order to accomplish the tasks described in paragraph (1) of this section; and

(3) Dedicate $80,000 of the annual budget request for this project to cover the costs of carrying out the tasks described in paragraphs (1) and (2) of this section, implementing the Partnership Project's formative evaluation, and traveling to Washington, DC in the second year of the project period for the Partnership Project's review for continued funding.

(l) Maintain ongoing communication with the OSEP Project Officer through monthly phone conversations and e-mail communication.

Fourth and Fifth Years of the Project

In deciding whether to continue funding the Partnership Project for the fourth and fifth years, the Secretary will consider the requirements of 34 CFR 75.253(a), and in addition—

(a) The recommendation of a review team consisting of experts selected by the Secretary. This review will be conducted during a one-day intensive meeting in Washington, DC that will be held during the last half of the second year of the project period. Projects must

budget for travel for this one-day intensive review;

(b) The timeliness and effectiveness with which all requirements of the negotiated cooperative agreement have been or are being met by the Partnership Project; and

(c) The quality, relevance, and usefulness of the Partnership Project's activities and products and the degree to which the Partnership Project's activities and products have contributed to changed practice and improved (1) collaboration across regular education, special education, and parent partner organizations to support and facilitate the effective implementation of IDEA and NCLB at the national, State, and local levels; (2) implementation of research-based practices; and (3) involvement of national organizations' State and local affiliates in the implementation of IDEA and NCLB at the State and local levels.

References

Fixen, D., Blase, K., Horner, R., & Sugai, G. (2008). —Concept paper: Developing the capacity for scaling up evidence-based programs in state departments of education (retrieved on May 12, 2008 from *http://sisep.fmhi.usf.edu/docs/State_Capacity_Development_0208.pdf*).

Hintz, (2008). Conceptual and Empirical Issues Related to Developing a Response-to-Intervention Framework. [Electronic version] (retrieved on May 14, 2008 from *http://www.studentprogress.org/doc/Hintze2008ConceptualandEmpiricalIssuesofRTI.doc*).

National Center on Response to Intervention (2008). What is RTI? (retrieved on May 14, 2008 from *http://www.rti4success.org/*).

National Research Center on Learning Disabilities. (2008). Core concepts of RTI. [Electronic version] (retrieved on April 10, 2008 from *http://www.nrcld.org/about/research/rti/concepts.html*)

Absolute Priority 2—National Dissemination Center for Children With Disabilities (84.326N)

Background

Along with an increased demand for educational accountability and improvement, diverse audiences, including educators and parents, have a greater need for information about education that addresses topics such as standards, assessments, and instructional practices (Petrides & Nodine, 2003). The increased need for information is reflected in an increase in the number of visits to the Web site of the National Dissemination Center for Children with Disabilities (NICHCY) funded by the Office of Special Education Programs (OSEP). The Center is a central source for information on disabilities in children, the laws that affect children with disabilities, and effective educational and early intervention practices that can be implemented to improve outcomes for students and infants and toddlers with disabilities.

Along with the increased need for information and the number of channels through which information is disseminated, individuals' preferences for obtaining information have changed (Caffarella, 2002; Kilgore, 2001). In 2005, NICHCY disseminated approximately 149,000 printed products in English and about 55,300 printed products in Spanish. In 2006, NICHCY disseminated a significantly smaller number of printed materials (approximately 27,000 total in English and Spanish), presumably reflecting consumers' increased use of a variety of technology and electronic retrieval methods to access information.

Current demographic patterns of students in regular education and special education, and of children participating in early intervention programs (U.S. Department of Education, 2007), indicate an increased prevalence of certain disabilities. Given this demographic change and the movement of students between regular and special education, the audience interested in information regarding children with disabilities and the Individuals with Disabilities Education Act (IDEA) is likely to become larger and more diverse in the future. Further, with increases in research and knowledge production, existing materials will need to be updated and revised and new materials will need to be created to keep pace with the increased customer demand for up-to-date information. Moreover, innovative approaches to dissemination, for example the use of diverse channels such as Webinars, will be needed to reach these audiences. Similarly, as education audiences increasingly request information through diverse channels, they also will expect this information to be customized and targeted. When information is conveyed using channels and formats aligned with the needs and preferences of end-users, knowledge transfer and learning may be more likely to occur (Hood, 2002). In sum, a new national dissemination center for children with disabilities is needed that will build on the work of NICHCY to respond to the expanding information needs and preferences of diverse audiences.

Priority

The purpose of this priority is to fund a cooperative agreement to support the establishment and operation of a National Dissemination Center for Children with Disabilities (Center). The Center must (a) develop and disseminate information about children with disabilities and IDEA that will be readily accessible to a broad range of audiences, and (b) provide leadership in the design and implementation of integrated, responsive, and effective information dissemination strategies.

To be considered for funding under this absolute priority, applicants must meet the application requirements contained in this priority. Any project funded under this absolute priority also must meet the programmatic and administrative requirements specified in the priority.

Application Requirements. An applicant must include in its application—

(a) A logic model that depicts, at a minimum, the goals, activities, outputs, and outcomes of the proposed project. A logic model communicates how a project will achieve its outcomes and provides a framework for both the formative and summative evaluations of the project;

Note: The following Web site provides more information on logic models and lists multiple online resources: *http://www.cdc.gov/eval/resources.htm*

(b) A plan to implement the activities described in the *Project Activities* section of this priority;

(c) A plan, linked to the proposed project's logic model, for a formative evaluation of the proposed project's activities. The plan must describe how the formative evaluation will use clear performance objectives to ensure continuous improvement in the operation of the proposed project, including objective measures of progress in implementing the project and ensuring the quality of products and services. Specifically, the Center must examine its dissemination activities to ensure that the information needs of targeted audiences (e.g., parents, families, early intervention personnel, educators) are being met;

(d) A budget for attendance at the following:

(1) A one and one half day kick-off meeting to be held in Washington, DC within four weeks after receipt of the award, and an annual planning meeting held in Washington, DC with the OSEP Project Officer during each subsequent year of the project period.

(2) A three-day Project Directors' Conference in Washington, DC during each year of the project period.

(3) A four-day Technical Assistance and Dissemination Conference in Washington, DC during each year of the project period.

(4) Three one-day trips annually to attend Department briefings, Department-sponsored conferences, and other meetings, as requested by OSEP; and

(e) A line item in the proposed budget for an annual set-aside of five percent of the award amount to support emerging needs that are consistent with the proposed project's activities, as those needs are identified in consultation with OSEP.

Note: With approval from the OSEP Project Officer, the Center must reallocate any remaining funds from this annual set-aside no later than the end of the third quarter of each budget period.

Project Activities. To meet the requirements of this priority, the Center, at a minimum, must conduct the following activities:

Knowledge Development Activities

(a) Identify and analyze quantitative and qualitative data, and other relevant sources, to determine the topical and informational needs of families, early intervention personnel, and educators. Sources for these data include, but are not limited to, the Regional Resource Centers (RRCs), Parent Technical Assistance Centers, the National Early Childhood Technical Assistance Center, and the Comprehensive Technical Assistance Centers funded through the Office of Elementary and Secondary Education.

(b) Develop strategies, in cooperation with the Technical Assistance Coordination Center (TACC), which OSEP intends to fund in FY 2008, to provide needed information about children with disabilities in a mode and manner easily accessed and understood by diverse audiences, including persons with limited English proficiency, individuals who have low literacy skills or who are not literate, and individuals with disabilities. Strategies must include developing informational materials that are universally designed (for more information on universal design, the following Web site provides multiple online resources: *http://www.cast.org*) and that are available in alternate formats (e.g., Braille) and languages. Activities must include a review of the efficiency and efficacy of different vehicles for disseminating needed information to various audiences, including those strategies used across OSEP's Technical Assistance and Dissemination (TA&D) Network.

Technical Assistance and Dissemination Activities

(a) Maintain a customer-service response system that enables individuals who request information to access that information in multiple ways. Points of access must include, but not be limited to, a toll-free telephone number, toll-free TTY, e-mail, and a Web site. Information response activities must include developing and disseminating documents and providing referrals to a broad range of service agencies upon request. Information services must be flexible in delivery format and hours of operation and be available, to the maximum extent possible, in multiple languages. The Web site must meet a government- or industry-recognized standard for accessibility and link to the Web site operated by TACC.

(b) Conceptualize, design, and produce an electronic newsletter that informs diverse audiences about the products and services available from OSEP-funded projects, and, as appropriate, products and services available from projects funded by other offices in the Department.

(c) Review IDEA-related materials developed by relevant Federal, State, and local public and private organizations to identify gaps in the information targeted for parents, families, early intervention personnel, and educators and offer recommendations to OSEP's TA&D Network to address these information gaps. Recommendations may include amending existing informational materials or developing new materials. The Center must make selected materials produced available for parents and families in both English and Spanish.

Leadership and Coordination Activities

(a) Establish and maintain an advisory committee to review the activities and outcomes of the Center and provide programmatic support and advice throughout the project period. At a minimum, the advisory committee must meet annually, whether in person, or by phone or another means and consist of family members of children with disabilities, regular and special educators, early intervention personnel, and technical assistance providers, as appropriate. The Center must submit the names of proposed members of the advisory committee to OSEP for approval within eight weeks after receipt of the award.

(b) Collaborate with relevant Federal, State, and local public and private organizations to plan and conduct outreach activities that promote awareness of disability issues using innovative technologies and particularly targeting remote or underserved populations. This plan and annual updates on its implementation must be submitted to OSEP and the advisory committee.

(c) Collect the dissemination plans from OSEP's TA&D projects and provide feedback on ways the projects can improve their respective dissemination plans to reach their target audiences. Based on the review of these plans and a review of evidence-based dissemination practices, develop a comprehensive dissemination strategy for OSEP's TA&D Network.

(d) Communicate and collaborate, on an ongoing basis, with OSEP-funded projects, including TACC, the Consortium for Appropriate Dispute Resolution in Special Education, the National Early Childhood Technical Assistance Center, and the Technical Assistance Alliance for Parent Centers. This collaboration could include the joint development of products, the coordination of TA services, and the planning and carrying out of TA meetings and events.

(e) Participate in, organize, or facilitate, as appropriate, OSEP communities of practice (*http://www.tacommunities.org/*) that are aligned with the Center's objectives as a way to support discussions and collaboration among key stakeholders.

(f) Prior to developing any new product, whether paper or electronic, submit to the OSEP Project Officer and the Proposed Product Advisory Board at OSEP's TACC for approval, a proposal describing the content and purpose of the product.

(g) Contribute, on an ongoing basis, updated information on the Center's services to OSEP's Technical Assistance and Dissemination Matrix (*http://matrix.rrfcnetwork.org/*), which provides current information on Department-funded TA services to a range of stakeholders.

(h) Conduct a summative evaluation of the Center in collaboration with the Center to Improve Project Performance (CIPP) as described in the following paragraphs. This summative evaluation must examine the outcomes or impact of the Center's activities in order to assess the effectiveness of those activities.

Note: The major tasks of CIPP are to guide, coordinate, and oversee the summative evaluations conducted by selected Technical Assistance, Personnel Development, Parent Training and Information Center, and Technology projects that individually receive $500,000 or more funding from OSEP annually. The efforts of CIPP are expected to enhance individual project evaluations by providing expert and unbiased assistance in designing evaluations, conducting analyses, and interpreting data.

To fulfill the requirements of the summative evaluation to be conducted under the guidance of CIPP, the Center must—

(1) Hire or designate, with the approval of the OSEP Project Officer, a project liaison staff person with sufficient dedicated time, experience in evaluation, and knowledge of the Center to work with CIPP on the following tasks: (i) Planning the Center's summative evaluation (*e.g.*, selecting evaluation questions, developing a timeline for the evaluation, locating sources of relevant data, and refining the logic model used for the evaluation), (ii) developing the summative evaluation design and instrumentation (e.g., determining quantitative or qualitative data collection strategies, selecting respondent samples, and pilot testing instruments), (iii) coordinating the evaluation timeline with the implementation of the Center's activities, (iv) collecting summative data, and (v) writing reports of summative evaluation findings;

(2) Cooperate with CIPP staff in order to accomplish the tasks described in paragraph (1) of this section; and

(3) Dedicate $50,000 of the annual budget request for this project to cover the costs of carrying out the tasks described in paragraphs (1) and (2) of this section, implementing the Center's formative evaluation, and traveling to Washington, DC in the second year of the project period for the Center's review for continued funding.

(i) Maintain ongoing communication with the OSEP Project Officer through monthly phone conversations and e-mail communication.

Fourth and Fifth Years of the Project

In deciding whether to continue funding the Center for the fourth and fifth years, the Secretary will consider the requirements of 34 CFR 75.253(a), and in addition—

(a) The recommendation of a review team consisting of experts selected by the Secretary. This review will be conducted during a one-day intensive meeting in Washington, DC that will be held during the last half of the second year of the project period. Projects must budget for travel for this one-day intensive review;

(b) The timeliness and effectiveness with which all requirements of the negotiated cooperative agreement have been or are being met by the Center; and

(c) The quality, relevance, and usefulness of the Center's activities and products and the degree to which the Center's activities and products have contributed to changed practice and improved knowledge and awareness regarding the implementation of IDEA.

References

Caffarella, R.S. (2002). *Planning programs for adult learners.* San Francisco: Jossey-Bass.

Hood, P. (2002). *Perspectives on knowledge utilization in education.* San Francisco: WestEd.

Kilgore, D.W. (2001). Critical and postmodern perspectives on adult learning. In S. Merriam (Ed). New Directions for Adult and Continuing Education, 89, (pp 53–61). New Jersey: Jossey-Bass Publishing.

Petrides, L.A. & Nodine, T.R. (2003). Knowledge management in education: Defining the landscape. Institute for the Study of Knowledge Management in Education. Available at *http://www.iskme.org/what-we-do/publications/km-in-education.*

U.S. Department of Education, Office of Special Education and Rehabilitative Services, Office of Special Education Programs, *27th Annual (2005) Report to Congress on the Implementation of the Individuals with Disabilities Education Act.* (2007). Washington, DC: Author.

Waiver of Proposed Rulemaking: Under the Administrative Procedure Act (APA) (5 U.S.C. 553), the Department generally offers interested parties the opportunity to comment on proposed priorities and requirements. Section 681(d) of IDEA, however, makes the public comment requirements of the APA inapplicable to the priorities in this notice.

Program Authority: 20 U.S.C. 1463 and 1481.

Applicable Regulations: The Education Department General Administrative Regulations (EDGAR) in 34 CFR parts 74, 75, 77, 79, 80, 81, 82, 84, 85, 86, 97, 98, and 99.

Note: The regulations in 34 CFR part 79 apply to all applicants except federally recognized Indian tribes.

Note: The regulations in 34 CFR part 86 apply to institutions of higher education (IHEs) only.

II. Award Information

Type of Award: Cooperative agreements.

Estimated Available Funds: $2,500,000. Please refer to the ''Estimated Available Funds'' column of the chart in this section for the estimated dollar amounts for individual competitions.

Estimated Average Size of Awards: See chart.

Maximum Awards: See chart.

Estimated Number of Awards: See chart.

Project Period: See chart.

INDIVIDUALS WITH DISABILITIES EDUCATION ACT TECHNICAL ASSISTANCE AND DISSEMINATION TO IMPROVE SERVICES AND RESULTS FOR CHILDREN WITH DISABILITIES APPLICATION NOTICE FOR FISCAL YEAR 2008

CFDA No. and name	Applications available	Deadline for transmittal of applications	Deadline for intergovernmental review	Estimated available funds	Estimated average size of awards	Maximum award*	Estimated number of awards	Project period	Contact person
84.326A—The IDEA Partnership Project.	July 15, 2008	August 14, 2008.	August 25, 2008.	$1,700,000	$1,700,000	$1,700,000	1	Up to 60 months.	Debra Price-Ellingstad, (202) 245–7481, Room 4097.
84.326N—National Dissemination Center for Children with Disabilities.	July 15, 2008	August 14, 2008.	August 25, 2008.	$800,000	$800,000	$800,000	1	Up to 60 months.	Judy Shanley (202) 245–6538, Room 4120.

*We will reject any application that proposes a budget exceeding the maximum award for a single budget period of 12 months. The Assistant Secretary for Special Education and Rehabilitative Services may change the maximum amount through a notice published in the FEDERAL REGISTER.

Note: The Department is not bound by any estimates in this notice.

III. Eligibility Information

1. *Eligible Applicants:* State educational agencies (SEAs); local educational agencies (LEAs); public charter schools that are considered LEAs under State law; IHEs; other public agencies; private nonprofit organizations; outlying areas; freely associated States; Indian tribes or tribal organizations; and for-profit organizations.

2. *Cost Sharing or Matching:* The program does not require cost sharing or matching.

3. *Other: General Requirements*—(a) The projects funded under this program must make positive efforts to employ and advance in employment qualified individuals with disabilities (see section 606 of IDEA).

(b) Applicants and grant recipients funded under this program must involve individuals with disabilities or parents of individuals with disabilities ages birth through 26 in planning, implementing, and evaluating the projects (see section 682(a)(1)(A) of IDEA).

IV. Application and Submission Information

1. *Address to Request Application Package:* Education Publications Center (ED Pubs), P.O. Box 1398, Jessup, MD 20794–1398. Telephone, toll free: 1–877–433–7827. FAX: (301) 470–1244. If you use a telecommunications device for the deaf (TDD), call, toll free: 1–877–576–7734.

You can contact ED Pubs at its Web site, also: *http://www.ed.gov/pubs/edpubs.html* or at its e-mail address: *edpubs@inet.ed.gov*

If you request an application package from ED Pubs, be sure to identify the competition to which you want to apply, as follows: CFDA Number 84.326A or 84.326N.

Individuals with disabilities can obtain a copy of the application package in an alternative format (e.g., Braille, large print, audiotape, or computer diskette) by contacting the person or team listed under *Alternative Format* in section VIII of this notice.

2. *Content and Form of Application Submission:* Requirements concerning the content of an application, together with the forms you must submit, are in the application package for each competition announced in this notice.

Page Limit: The application narrative (Part III of the application) is where you, the applicant, address the selection criteria that reviewers use to evaluate your application. You must limit Part III to the equivalent of no more than 70 pages for each absolute priority, using the following standards:

- A ''page'' is 8.5'' x 11'', on one side only, with 1'' margins at the top, bottom, and both sides.
- Double space (no more than three lines per vertical inch) all text in the application narrative, including titles, headings, footnotes, quotations, references, and captions, as well as all text in charts, tables, figures, and graphs.
- Use a font that is either 12 point or larger or no smaller than 10 pitch (characters per inch).

The page limit does not apply to Part I, the cover sheet; Part II, the budget section, including the narrative budget justification; Part IV, the assurances and certifications; or the two-page abstract, the resumes, the bibliography, the references, or the letters of support. The page limit, however, does apply to the application narrative in Part III.

We will reject your application if you exceed the page limit or if you use other standards and exceed the equivalent of the page limit.

3. *Submission Dates and Times:*

Applications Available: See chart.

Deadline for Transmittal of Applications: See chart.

Applications for grants under this program may be submitted electronically using the Grants.gov Apply site (Grants.gov), or in paper format by mail or hand delivery. For information (including dates and times) about how to submit your application electronically, or in paper format by mail or hand delivery, please refer to section IV. 6. *Other Submission Requirements* in this notice.

We do not consider an application that does not comply with the deadline requirements.

Individuals with disabilities who need an accommodation or auxiliary aid in connection with the application process should contact the person listed under *For Further Information Contact* in section VII in this notice. If the Department provides an accommodation or auxiliary aid to an individual with a disability in connection with the application process, the individual's application remains subject to all other requirements and limitations in this notice.

Deadline for Intergovernmental Review: See chart.

4. *Intergovernmental Review:* This program is subject to Executive Order 12372 and the regulations in 34 CFR part 79. Information about Intergovernmental Review of Federal Programs under Executive Order 12372 is in the application package for each of the competitions announced in this notice.

5. *Funding Restrictions:* We reference regulations outlining funding restrictions in the *Applicable Regulations* section in this notice.

6. *Other Submission Requirements:* Applications for grants under this program may be submitted electronically or in paper format by mail or hand delivery.

a. Electronic Submission of Applications.

To comply with the President's Management Agenda, we are participating as a partner in the Governmentwide Grants.gov Apply site. The Technical Assistance and Dissemination to Improve Services and Results for Children with Disabilities program, CFDA Numbers 84.326A and 84.326N, announced in this notice are included in this project. We request your participation in Grants.gov.

If you choose to submit your application electronically, you must use the Governmentwide Grants.gov Apply site at *http://www.Grants.gov.* Through this site, you will be able to download a copy of the application package, complete it offline, and then upload and submit your application. You may not e-mail an electronic copy of a grant application to us.

You may access the electronic grant application for the Technical Assistance and Dissemination to Improve Services and Results for Children with Disabilities program competitions—CFDA numbers 84.326A and 84.326N at *http://www.Grants.gov.* You must search for the downloadable application package for this program by the CFDA number. Do not include the CFDA number's alpha suffix in your search (e.g., search for 84.326, not 84.326A or 84.326N). Please note the following:

- Your participation in Grants.gov is voluntary.
- When you enter the Grants.gov site, you will find information about submitting an application electronically through the site, as well as the hours of operation.
- Applications received by Grants.gov are date and time stamped. Your application must be fully uploaded and submitted and must be date and time stamped by the Grants.gov system no later than 4:30:00 p.m., Washington, DC time, on the application deadline date. Except as otherwise noted in this section, we will not consider your application if it is date and time stamped by the Grants.gov system later than 4:30:00 p.m., Washington, DC time, on the application deadline date. When we retrieve your application from

Grants.gov, we will notify you if we are rejecting your application because it was date and time stamped by the Grants.gov system after 4:30:00 p.m., Washington, DC time, on the application deadline date.

• The amount of time it can take to upload an application will vary depending on a variety of factors, including the size of the application and the speed of your Internet connection. Therefore, we strongly recommend that you do not wait until the application deadline date to begin the submission process through Grants.gov.

• You should review and follow the Education Submission Procedures for submitting an application through Grants.gov that are included in the application package for the competition to which you are applying to ensure that you submit your application in a timely manner to the Grants.gov system. You also can find the Education Submission Procedures pertaining to Grants.gov at *http://e-Grants.ed.gov/help/GrantsgovSubmissionProcedures.pdf.*

• To submit your application via Grants.gov, you must complete all steps in the Grants.gov registration process (see *http://www.grants.gov/applicants/get_registered.jsp*). These steps include: (1) Registering your organization, a multi-part process that includes registration with the Central Contractor Registry (CCR); (2) registering yourself as an Authorized Organization Representative (AOR); and (3) getting authorized as an AOR by your organization. Details on these steps are outlined in the Grants.gov 3-Step Registration Guide (see *http://www.grants.gov/section910/Grants.govRegistrationBrochure.pdf).* You also must provide on your application the same D-U-N-S Number used with this registration. Please note that the registration process may take five or more business days to complete, and you must have completed all registration steps to allow you to submit successfully an application via Grants.gov. In addition you will need to update your CCR registration on an annual basis. This may take three or more business days to complete.

• You will not receive additional point value because you submit your application in electronic format, nor will we penalize you if you submit your application in paper format.

• If you submit your application electronically, you must submit all documents electronically, including all information you typically provide on the following forms: Application for Federal Assistance (SF 424), the Department of Education Supplemental Information for SF 424, Budget Information—Non-Construction Programs (ED 524), and all necessary assurances and certifications. Please note that two of these forms—the SF 424 and the Department of Education Supplemental Information for SF 424—have replaced the ED 424 (Application for Federal Education Assistance).

• If you submit your application electronically, you must attach any narrative sections of your application as files in a .DOC (document), .RTF (rich text), or .PDF (Portable Document) format. If you upload a file type other than the three file types specified in this paragraph or submit a password-protected file, we will not review that material.

• Your electronic application must comply with any page-limit requirements described in this notice.

• After you electronically submit your application, you will receive from Grants.gov an automatic notification of receipt that contains a Grants.gov tracking number. (This notification indicates receipt by Grants.gov only, not receipt by the Department.) The Department then will retrieve your application from Grants.gov and send a second notification to you by e-mail. This second notification indicates that the Department has received your application and has assigned your application a PR/Award number (an ED-specified identifying number unique to your application).

• We may request that you provide us original signatures on forms at a later date.

Application Deadline Date Extension in Case of Technical Issues With the Grants.gov System: If you are experiencing problems submitting your application through Grants.gov, please contact the Grants.gov Support Desk, toll-free, at 1–800–518–4726. You must obtain a Grants.gov Support Desk Case Number and must keep a record of it.

If you are prevented from electronically submitting your application on the application deadline date because of technical problems with the Grants.gov system, we will grant you an extension until 4:30:00 p.m., Washington, DC time, the following business day to enable you to transmit your application electronically or by hand delivery. You also may mail your application by following the mailing instructions described elsewhere in this notice.

If you submit an application after 4:30:00 p.m., Washington, DC time, on the application deadline date, please contact the person listed under **FOR FURTHER INFORMATION CONTACT** in section VII in this notice and provide an explanation of the technical problem you experienced with Grants.gov, along with the Grants.gov Support Desk Case Number. We will accept your application if we can confirm that a technical problem occurred with the Grants.gov system and that that problem affected your ability to submit your application by 4:30:00 p.m., Washington, DC time, on the application deadline date. The Department will contact you after a determination is made on whether your application will be accepted.

Note: The extensions to which we refer in this section apply only to the unavailability of, or technical problems with, the Grants.gov system. We will not grant you an extension if you failed to fully register to submit your application to Grants.gov before the application deadline date and time or if the technical problem you experienced is unrelated to the Grants.gov system.

b. Submission of Paper Applications by Mail

If you submit your application in paper format by mail (through the U.S. Postal Service or a commercial carrier), you must mail the original and two copies of your application, on or before the application deadline date, to the Department at the applicable following address:

By mail through the U.S. Postal Service: U.S. Department of Education, Application Control Center, Attention: (CFDA Number 84.326A or 84.326N), 400 Maryland Avenue, SW., Washington, DC 20202–4260; or

By mail through a commercial carrier: U.S. Department of Education, Application Control Center, Stop 4260, Attention: (CFDA Number 84.326A or 84.326N), 7100 Old Landover Road, Landover, MD 20785–1506.

Regardless of which address you use, you must show proof of mailing consisting of one of the following:

(1) A legibly dated U.S. Postal Service postmark.

(2) A legible mail receipt with the date of mailing stamped by the U.S. Postal Service.

(3) A dated shipping label, invoice, or receipt from a commercial carrier.

(4) Any other proof of mailing acceptable to the Secretary of the U.S. Department of Education.

If you mail your application through the U.S. Postal Service, we do not accept either of the following as proof of mailing:

(1) A private metered postmark.

(2) A mail receipt that is not dated by the U.S. Postal Service.

If your application is postmarked after the application deadline date, we will not consider your application.

Note: The U.S. Postal Service does not uniformly provide a dated postmark. Before relying on this method, you should check with your local post office.

c. Submission of Paper Applications by Hand Delivery.

If you submit your application in paper format by hand delivery, you (or a courier service) must deliver the original and two copies of your application by hand, on or before the application deadline date, to the Department at the following address: U.S. Department of Education, Application Control Center, Attention: (CFDA Number 84.326A or 84.326N) 550 12th Street, SW., Room 7041, Potomac Center Plaza, Washington, DC 20202–4260.

The Application Control Center accepts hand deliveries daily between 8:00 a.m. and 4:30:00 p.m., Washington, DC time, except Saturdays, Sundays and Federal holidays.

Note for Mail or Hand Delivery of Paper Applications: If you mail or hand deliver your application to the Department—

(1) You must indicate on the envelope and—if not provided by the Department—in Item 11 of the SF 424 the CFDA number, including suffix letter, if any, of the competition under which you are submitting your application; and

(2) The Application Control Center will mail to you a notification of receipt of your grant application. If you do not receive this notification within 15 business days from the application deadline date, you should call the U.S. Department of Education Application Control Center at (202) 245–6288.

V. Application Review Information

1. *Selection Criteria:* The selection criteria for this program are from 34 CFR 75.210 and are listed in the application packages for each competition announced in this notice.

2. *Peer Review:* In the past, the Department has had difficulty finding peer reviewers for certain competitions because so many individuals who are eligible to serve as peer reviewers have conflicts of interest. The Standing Panel requirements under IDEA also have placed additional constraints on the availability of reviewers. Therefore, the Department has determined that, for some discretionary grant competitions, applications may be separated into two or more groups and ranked and selected for funding within specific groups. This procedure will make it easier for the Department to find peer reviewers, by ensuring that greater numbers of individuals who are eligible to serve as reviewers for any particular group of applicants will not have conflicts of interest. It also will increase the quality, independence, and fairness of the review process, while permitting panel members to review applications under discretionary grant competitions for which they also have submitted applications. However, if the Department decides to select an equal number of applications in each group for funding, this may result in different cut-off points for fundable applications in each group.

VI. Award Administration Information

1. *Award Notices:* If your application is successful, we notify your U.S. Representative and U.S. Senators and send you a Grant Award Notice (GAN). We may notify you informally, also.

If your application is not evaluated or not selected for funding, we notify you.

2. *Administrative and National Policy Requirements:* We identify administrative and national policy requirements in the application package and reference these and other requirements in the *Applicable Regulations* section in this notice.

We reference the regulations outlining the terms and conditions of an award in the *Applicable Regulations* section in this notice and include these and other specific conditions in the GAN. The GAN also incorporates your approved application as part of your binding commitments under the grant.

3. *Reporting:* At the end of your project period, you must submit a final performance report, including financial information, as directed by the Secretary. If you receive a multi-year award, you must submit an annual performance report that provides the most current performance and financial expenditure information as directed by the Secretary under 34 CFR 75.118. The Secretary also may require more frequent performance reports under 34 CFR 75.720(c). For specific requirements on reporting, please go to *http://www.ed.gov/fund/grant/apply/appforms/appforms.html*

4. *Performance Measures:* Under the Government Performance and Results Act of 1993 (GPRA), the Department has established a set of performance measures, including long-term measures, that are designed to yield information on various aspects of the effectiveness and quality of the Technical Assistance and Dissemination to Improve Services and Results for Children with Disabilities program. These measures focus on the extent to which projects provide high quality products and services, the relevance of project products and services to educational and early intervention policy and practice, and the use of products and services to improve educational and early intervention policy and practice. The grantee will be required to provide information related to these measures.

The grantee also will be required to report information on the project's performance in annual reports to the Department (34 CFR 75.590).

VII. Agency Contact

For Further Information Contact: See chart in the *Award Information* section of this notice for the name, room number and telephone number of the contact person for each competition. You can write to the contact at the following address: U.S. Department of Education, 400 Maryland Avenue, SW., Potomac Center Plaza (PCP), Washington, DC 20202–2550.

If you use a TDD, call the Federal Relay Service (FRS), toll-free, at 1–800–877–8339.

VIII. Other Information

Alternative Format: Individuals with disabilities can obtain this document and a copy of the application package in an alternative format (e.g., Braille, large print, audiotape, or computer diskette) by contacting the Grants and Contracts Services Team, U.S. Department of Education, 400 Maryland Avenue, SW., room 5075, PCP, Washington, DC 20202–2550. Telephone: (202) 245–7363. If you use a TDD, call the FRS, toll free, at 1–800–877–8339.

Electronic Access to This Document: You can view this document, as well as all other documents of this Department published in the **Federal Register**, in text or Adobe Portable Document Format (PDF) on the Internet at the following site: *http://www.ed.gov/news/fedregister*.

To use PDF you must have Adobe Acrobat Reader, which is available free at this site. If you have questions about using PDF, call the U.S. Government Printing Office (GPO), toll free, at 1–888–293–6498; or in the Washington, DC, area at (202) 512–1530.

Note: The official version of this document is the document published in the **Federal Register**. Free Internet access to the official edition of the **Federal Register** and the Code of Federal Regulations is available on GPO Access at: *http://www.gpoaccess.gov/nara/index.html*.

Dated: July 10, 2008.

Tracy R. Justesen,

Assistant Secretary for Special Education and Rehabilitative Services.

[FR Doc. E8–16128 Filed 7–14–08; 8:45 am]

BILLING CODE 4000–01–P

DEPARTMENT OF ENERGY

2008 Department of Energy Nuclear Suppliers Outreach Meeting

AGENCY: Department of Energy.

ACTION: Notice of open meeting.

SUMMARY: The Department of Energy (DOE) Office of Environmental Management (EM), and the National Nuclear Security Administration (NNSA), will co-sponsor a Suppliers Outreach event for suppliers interested in providing service and products in the nuclear sector.

DATES: Thursday, July 31, 2008, 8 a.m.–6 p.m.

ADDRESSES: The Hyatt Regency Tech Center Hotel, 7800 E Tufts Avenue, Denver, Colorado 80237.

FOR FURTHER INFORMATION CONTACT: Nancy Osbourne, Event Coordinator, Performance Results Corporation, 2605 Cranberry Square, Morgantown, WV 26508. Phone (304) 291–2100; Fax (304) 291–5885 or e-mail: *nosbourne@prc8a.com*.

SUPPLEMENTARY INFORMATION:

Purpose of the meeting: This nuclear suppliers' outreach event is an excellent opportunity for companies interested in working in the DOE nuclear sector to gain insights into the current and future markets for products and services, and requirements to enter or to continue to work on nuclear projects in the DOE-complex. In addition, participants will have the opportunity to interact directly with senior executives, project managers, and procurement personnel working for DOE and its prime contractors; and, gain insight into Nuclear Quality Assurance program requirements applicable to both the DOE and commercial nuclear industry sectors.

The purpose of this forum is two fold. First, it will help ensure that all EM and NNSA sites have an adequate number of qualified nuclear and non-nuclear suppliers for future projects and programs. Second, it will provide information for suppliers regarding the needs of DOE projects and programs for their products and services in the years ahead.

Agenda

8 a.m. Welcome and Logistics

8:15 a.m. Key Note Addresses

- Perspectives on EM Nuclear Project Needs
- Perspectives on NNSA Nuclear Project Needs
- Perspectives on U.S. Business Competitiveness in Nuclear Energy

9:45 a.m. Break

10:15 a.m. Market Outlooks for Nuclear Suppliers

- Commercial Nuclear Industry Supplier Interactions and Future Direction
- DOE/EM Outlook: Major Construction and Operation Projects
- DOE/NNSA Outlook: Major Construction and Operation Projects
- Nuclear Quality Assurance (NQA) Requirements and Impact on Suppliers

11:45 a.m. Question and Answer Period

12 p.m. Lunch

1:30 p.m. Concurrent Panel Discussions: NQA–1 Based Procurement Challenges and Major Issues

- Panel Session: Nuclear Services (Design, Engineering, Construction)
- Panel Session: Nuclear Equipment (Pumps, Valves, Tanks, Pipes)

3 p.m. DOE Site and Industry Interactions

- EM/NNSA Site Tables: Federal and Contractor procurement representatives from each site will be available to discuss specific needs and issues
- NQA–1 Table: ASME representatives will be available to discuss Quality Assurance Program requirements and program implementation

Registration Information: There is no conference fee. Participants may register at *http://www.prc8a.com/doenuclearsuppliersoutreachmeeting/*, or by contacting Nancy Osbourne at the address or telephone number listed above.

Issued at Washington, DC, on July 9, 2008.

Dae Y. Chung,

Deputy Assistant Secretary, Office of Safety Management and Operations.

[FR Doc. E8–16028 Filed 7–14–08; 8:45 am]

BILLING CODE 6405–01–P

DEPARTMENT OF ENERGY

Office of Energy Efficiency and Renewable Energy; State Energy Advisory Board

AGENCY: Department of Energy.

ACTION: Notice of open teleconference.

SUMMARY: This notice announces a teleconference of the State Energy Advisory Board (STEAB). The Federal Advisory Committee Act (Pub. L. 92–463; 86 Stat. 770) requires that public notice of these teleconferences be announced in the **Federal Register**.

DATES: July 15, 2008 from 2. p.m. to 3. p.m. EDT.

FOR FURTHER INFORMATION CONTACT: Gary Burch, STEAB Designated Federal Officer, Acting Assistant Manager, Office of Commercialization and Project Management, Golden Field Office, U.S. Department of Energy, 1617 Cole Boulevard, Golden, CO 80401, Telephone 303/275–4801.

SUPPLEMENTARY INFORMATION: *Purpose of the Board:* To make recommendations to the Assistant Secretary for the Office of Energy Efficiency and Renewable Energy regarding goals and objectives, programmatic and administrative policies, and to otherwise carry out the Board's responsibilities as designated in the State Energy Efficiency Programs Improvement Act of 1990 (Pub. L. 101–440).

Tentative Agenda: Update members on routine business matters.

Public Participation: The teleconference is open to the public. Written statements may be filed with the Board either before or after the meeting. Members of the public who wish to make oral statements pertaining to agenda items should contact Gary Burch at the address or telephone number listed above. Requests to make oral comments must be received five days prior to the conference call; reasonable provision will be made to include requested topic(s) on the agenda. The Chair of the Board is empowered to conduct the call in a fashion that will facilitate the orderly conduct of business. This notice is being published less than 15 days before the date of the meeting due to programmatic issues.

Notes: The notes of the teleconference will be available for public review and copying within 60 days on the STEAB Web site, *http://www.steab.org.*

Issued at Washington, DC, on July 9, 2008.

Rachel Samuel,

Deputy Committee Management Officer.

[FR Doc. E8–16162 Filed 7–14–08; 8:45 am]

BILLING CODE 6450–01–P

DEPARTMENT OF ENERGY

Federal Energy Regulatory Commission

[Project No. P–400–051]

Public Service Company of Colorado; Notice of Application Tendered for Filing With the Commission and Establishing Procedural Schedule for Licensing and Deadline for Submission of Final Amendments

July 8, 2008.

Take notice that the following hydroelectric application has been filed with the Commission and is available for public inspection.

a. *Type of Application:* New Major License.

b. *Project No.:* P–400–051.

c. *Date Filed:* June 26, 2008.

d. *Applicant:* Public Service Company of Colorado.

e. *Name of Project:* Ames Hydroelectric Project.

f. *Location:* The existing project is located on Lake Fork, Howard Fork, and South Fork of the San Miguel River, in San Miguel County, about 6 miles north of Telluride, Colorado. The Ames Project occupies 99 acres of the Uncompahgre National Forest.

g. *Filed Pursuant to:* Federal Power Act 16 U.S.C. 791(a)–825(r)

h. *Applicant Contact:* Randy Rhodes, Public Service Company of Colorado, 4653 Table Mountain Drive, Golden Colorado 80403; telephone (720) 497–2123.

i. *FERC Contact:* David Turner (202) 502–6091 or via e-mail at *david.turner@ferc.gov.*

j. This application is not ready for environmental analysis at this time.

k. *Project Description:* The existing project uses water that originates in two separate subbasins (Lake Fork and Howard's Fork) of the South Fork San Miguel River. The existing project, from upstream to downstream along Lake Fork and Howard's Fork, respectively, consists of the following: (1) A 44-acre reservoir (Hope Lake) that has 2,000 acre-feet of active storage capacity at a normal maximum water surface elevation of 11,910 feet; (2) a 150-foot-long, 20-foot high rock-filled, timber dam (Hope Lake dam), with a 816-foot-long, 5-foot-wide, and 6-foot-high rock tunnel that releases water from Hope Lake to Lake Fork Creek; (3) a 138-acre reservoir (Trout Lake) with 2,500 acre-feet of active storage capacity at a normal maximum water surface elevation of 9,700 feet; (4) a 570-foot-long, 30-foot-high earth-filled dam (Trout Lake dam) with a 42-inch-diameter, concrete encased steel pipe outlet that extends through the embankment; (5) a 12,650-foot-long, 42-inch to 26-inch-diameter steel pipe penstock that conveys water from Trout Lake to the Ames powerhouse; (6) a 260-foot-long, 6-foot-high earth-filled and timber crib diversion dam on the Howards Fork, with a concrete inlet structure, which diverts water from a sluiceway constructed through the embankment via a manually-operated 9-foot-wide steel slide gate at the downstream end of the sluiceway; (7) a 4,500-foot-long, 36-inch-diameter welded steel penstock; (8) a 2,000-foot-long, 18-inch-diameter steel penstock; (9) the 44-foot-long, 54-foot-wide, stone masonry Ames powerhouse that contains one 3.6 megawatt (MW) generating unit; and (10) appurtenant facilities. The project is operated both as a base-load plant and a peaking plant depending on the time of the year; the applicant does not propose any changes to project operations. The applicant is proposing new recreation facilities at Trout Lake, along with additions and deletions to the project boundary due to new land surveys and easements

l. *Locations of the Application:* A copy of the application is available for review at the Commission in the Public Reference Room or may be viewed on the Commission's Web site at *http://www.ferc.gov* using the ''eLibrary'' link. Enter the docket number excluding the last three digits in the docket number field to access the document. For assistance, contact FERC Online Support at *FERCOnlineSupport@ferc.gov* or toll-free at (866) 208–3676, or for TTY, (202) 502–8659. A copy is also available for inspection and reproduction at the address in item (h) above.

m. You may also register online at *http://www.ferc.gov/esubscribenow.htm* to be notified via e-mail of new filings and issuances related to this or other pending projects. For assistance, contact FERC Online Support.

n. *Procedural Schedule:* The application will be processed according to the following Hydro Licensing Schedule. Revisions to the schedule may be made as appropriate. For example, issuance of the Ready for Environmental Analysis Notice is based on the assumption that there will be no additional information.

Milestone	Date
Application Deficiency Determination Letter and Issuance of Additional Information Requests (AIRs)	July 2008.
Notice of Acceptance/Notice of Ready for Environmental Analysis	August 2008.
Filing of Interventions, Recommendations, Terms and Conditions, and Fishway Prescriptions	October 2008.
Reply Comments Due	December 2008.
Issuance of Draft EA	January 2009.
Comments on Draft EA Due	February 2009.
Filing of Modified Terms and Conditions	April 2009.
Issuance of Final EA	July 2009.

o. Final amendments to the application must be filed with the Commission no later than 30 days from the issuance date of the notice of ready for environmental analysis.

Kimberly D. Bose,

Secretary.

[FR Doc. E8–16047 Filed 7–14–08; 8:45 am]

BILLING CODE 6717–01–P

DEPARTMENT OF ENERGY

Federal Energy Regulatory Commission

[Project No. P–12589–001]

Public Service Company of Colorado; Notice of Application Tendered for Filing With the Commission and Establishing Procedural Schedule for Licensing and Deadline for Submission of Final Amendments

July 8, 2008.

Take notice that the following hydroelectric application has been filed with the Commission and is available for public inspection.

a. *Type of Application:* New Major License.

b. *Project No.:* P–12589–001.

c. *Date Filed:* June 25, 2008.

d. *Applicant:* Public Service Company of Colorado.

e. *Name of Project:* Tacoma Hydroelectric Project.

f. *Location:* The existing project is located on Cascade Creek, Little Cascade Creek and Elbert Creek in La Plata and San Juan Counties, Colorado. The Tacoma Project occupies 221 acres of the San Juan National Forest.

g. *Filed Pursuant to:* Federal Power Act 16 U.S.C. 791(a)–825(r).

h. *Applicant Contact:* Randy Rhodes, Public Service Company of Colorado, 4653 Table Mountain Drive, Golden Colorado 80403; telephone (720) 497–2123.

i. *FERC Contact:* David Turner (202) 502–6091 or via e-mail at *david.turner@ferc.gov.*

j. This application is not ready for environmental analysis at this time.

k. *Project Description:* The existing project consists of the following: (1) A 30-foot-long, 10-foot-high concrete diversion dam on Cascade Creek; (2) a 4,200-foot-long, 10-foot-diameter, semi-circular, elevated wooden flume; (3) a 1,400-foot-long, 60-inch-diameter steel inverted siphon; (4) a 14,500-foot-long, 64-inch-diameter steel pipeline; (5) the open channel of Little Cascade Creek; (6) a 0.5-mile-long, 5-foot-deep lake (Columbine Lake) formed by a small, partially breached timber dam on Little Cascade Creek; (7) the open channel of Little Cascade Creek downstream of Columbine Lake; (8) the 4-acre Aspaas Lake; (9) a 274-foot-long, 27-foot-high, earth-filled Aspaas dam; (10) a 14-foot-wide, rock-cut open diversion channel that diverts flow from Aspaas Lake to Electra Lake; (11) the 800-acre Electra Lake; (12) a 140-foot-long, 20-foot-high, rock-filled, timber crib dam (Stagecoach dam) serving as the spillway for Electra Lake; (13) a 1,270-foot-long, 62-foot-high, rock-filled dam (Terminal dam), with an impermeable asphalt membrane on the upstream face and an asphalt-paved crest; (14) a 429-foot-long, 54-inch-diameter steel pipe intake under the Terminal dam that leads project flows from Electra Lake to a valve vault; (15) the valve vault; (16) a 9,590-foot-long, 66-inch-diameter welded steel penstock, with a 12-foot-diameter, 116-foot-high surge tank; (17) a bifurcated penstock structure that diverts flow to a 2,050-foot-long, 30-inch-diameter welded steel penstock that enters the powerhouse and a 2,050-foot-long, 54-inch diameter welded steel penstock that branches to a 46-inch diameter pipe immediately prior to entering the power house; (18) a 108-foot-long, 64-foot-wide, steel frame, brick powerhouse containing three generating units with a total installed capacity of 8 megawatts (MW); (19) a 44 kV substation adjacent to the powerhouse; and (20) appurtenant facilities. The project is operated both as a base-load plant and a peaking plant depending on the time of the year. The applicant proposes the following changes to project facilities: (1) project boundary modifications to reflect lands needed for project operations; (2) rehabilitation and addition of the 6-foot-high Canyon Creek diversion to supply potable water, emergency cooling water, and fire protection; (3) the addition of 4 MW turbine-generator (Unit 4); and (4) several recreation and environmental measures.

l. *Locations of the Application:* A copy of the application is available for review at the Commission in the Public Reference Room or may be viewed on the Commission's Web site at *http://www.ferc.gov* using the ''eLibrary'' link. Enter the docket number excluding the last three digits in the docket number field to access the document. For assistance, contact FERC Online Support at *FERCOnlineSupport@ferc.gov* or toll-free at (866) 208–3676, or for TTY, (202) 502–8659. A copy is also available for inspection and reproduction at the address in item (h) above.

m. You may also register online at *http://www.ferc.gov/esubscribenow.htm* to be notified via email of new filings and issuances related to this or other pending projects. For assistance, contact FERC Online Support.

n. *Procedural Schedule:* The application will be processed according to the following Hydro Licensing Schedule. Revisions to the schedule may be made as appropriate. For example, issuance of the Ready for Environmental Analysis Notice is based on the assumption that there will be no additional information.

Milestone	Date
Application Deficiency Determination Letter and Issuance of Additional Information Requests (AIRs)	July 2008.
Notice of Acceptance/Notice of Ready for Environmental Analysis	August 2008.
Filing of Interventions, Recommendations, Terms and Conditions, and Fishway Prescriptions	October 2008.
Reply Comments Due	December 2008.
Issuance of Draft EA	January 2009.
Comments on Draft EA Due	February 2009.
Filing of Modified Terms and Conditions	April 2009.
Issuance of Final EA	July 2009.

o. Final amendments to the application must be filed with the Commission no later than 30 days from the issuance date of the notice of ready for environmental analysis.

Kimberly D. Bose,

Secretary.

[FR Doc. E8–16049 Filed 7–14–08; 8:45 am]

BILLING CODE 6717–01–P

DEPARTMENT OF ENERGY

Federal Energy Regulatory Commission

[Project No. 459–229]

Union Electric Company, dba AmerenUE; Notice of Application for Non-Project Use of Project Lands and Soliciting Comments, Motions To Intervene, and Protests

July 9, 2008.

Take notice that Commission hydroelectric application has been filed with the Commission and is available for public inspection:

a. *Application Type:* Non-Project Use of Project Lands and Waters.

b. *Project No:* 459–229.

c. *Date Filed:* June 23, 2008.

d. *Applicant:* Union Electric Company, dba AmerenUE.

e. *Name of Project:* Osage Project.

f. *Location:* The proposal would be located at the Bella Sera Condominium community near mile marker 31.2+0.1 on the Osage Branch of the Lake of the Ozarks, in Camden County, Missouri.

g. *Filed Pursuant to:* Federal Power Act, 16 U.S.C. 791(a)–825(r).

h. *Applicant Contact:* Mr. Jeff Green, Shoreline Supervisor, Ameren UE, P.O. Box 993, Lake Ozark, MO 65049, (573) 365–9214.

i. *FERC Contact:* Any questions on this notice should be addressed to Isis Johnson, Telephone (202) 502–6346, and e-mail: *Isis.Johnson@ferc.gov.*

j. *Deadline for filing comments, motions to intervene, and protests:* August 11, 2008.

All documents (original and eight copies) should be filed with: Kimberly D. Bose, Secretary, Federal Energy Regulatory Commission, 888 First Street, NE., Washington, DC 20426. Please include the project number (P–459–229) on any comments or motions filed. Comments, protests, and interventions may be filed electronically via the internet in lieu of paper. See, 18 CFR 385.2001(a)(1)(iii) and the instructions on the Commission's Web site under the ''e-Filing'' link. The Commission strongly encourages e-filings.

k. *Description of Request:* Union Electric Company, dba AmerenUE (licensee) filed an application seeking Commission approval to grant permission to Irongate, LLC dba Bella Sera Condominiums to install three multi-slip boat docks on the Osage Branch of the Lake of the Ozarks. The three docks would include a total of 35 boat slips to serve the residents of the Bella Sera Condominium community. The applicant also proposes to provide electrical power to the slips. The proposed facilities would be floated into place and no dredging, fuel-dispensing, or sewage pumping facilities are proposed.

l. *Locations of the Application:* A copy of the application is available for inspection and reproduction at the Commission's Public Reference Room, located at 888 First Street, NE., Room 2A, Washington, DC 20426, or by calling (202) 502–8371. This filing may also be viewed on the Commission's Web site at *http://www.ferc.gov* using the ''eLibrary'' link. Enter the docket number excluding the last three digits in the docket number field to access the document. You may also register online at *http://www.ferc.gov/docs-filing/esubscription.asp* to be notified via e-mail of new filings and issuances related to this or other pending projects. For assistance, call 1–866–208–3372 or e-mail *FERCOnlineSupport@ferc.gov,* for TTY, call (202) 502–8659. A copy is also available for inspection and reproduction at the address in item (h) above.

m. Individuals desiring to be included on the Commission's mailing list should so indicate by writing to the Secretary of the Commission.

n. *Filing and Service of Responsive Documents*—Any filings must bear in all capital letters the title ''COMMENTS'', ''RECOMMENDATIONS FOR TERMS AND CONDITIONS'', ''PROTEST'', or ''MOTION TO INTERVENE'', as applicable, and the Project Number of the particular application to which the filing refers. A copy of any motion to intervene must also be served upon each representative of the Applicant specified in the particular application.

o. Any filings must bear in all capital letters the title ''COMMENTS'', ''PROTEST'', or ''MOTION TO INTERVENE'', as applicable, and the Project Number of the particular application to which the filing refers.

p. *Agency Comments:* Federal, State, and local agencies are invited to file comments on the described application. A copy of the application may be obtained by agencies directly from the Applicant. If an agency does not file comments within the time specified for filing comments, it will be presumed to have no comments. One copy of an agency's comments must also be sent to the Applicant's representatives.

q. Comments, protests and interventions may be filed electronically via the Internet in lieu of paper. See, 18 CFR 385.2001(a)(1)(iii) and the instructions on the Commission's Web site at *http://www.ferc.gov* under the ''e-Filing'' link.

Kimberly D. Bose,

Secretary.

[FR Doc. E8–16210 Filed 7–14–08; 8:45 am]

BILLING CODE 6717–01–P

DEPARTMENT OF ENERGY

Federal Energy Regulatory Commission

[Project No. 13228–000]

Wellesley Rosewood Maynard Mills LP; Notice of Preliminary Permit Application Accepted for Filing and Soliciting Comment, Motions To Intervene, and Competing Applications

July 9, 2008.

On May 19, 2008, Wellesley Rosewood Maynard Mills LP filed an application, pursuant to section 4(f) of the Federal Power Act, proposing to study the feasibility of the Clock Tower Place Hydroelectric Project, to be located on the Assabet River in the Maynard area of Middlesex County, Massachusetts.

The proposed project would consist of: (1) Two existing dams, the larger constructed of dry-laid, cut granite blocks, 9.5-foot-high and 170-foot-long and the smaller a masonry-faced embankment structure, respectively, for the upper and lower reservoirs which would have water surface elevations of 177 and 176 feet, MSL, a (2) proposed powerhouse containing one generating unit having a total installed capacity of 290 kilowatts, a (3) proposed 49-foot-long penstock and twin 300-foot-long tailrace tunnels, a (4) 1,600-foot-long power canal leading to the gatehouse, (5) incorporation of an existing transformer to interconnect equipment with Clock Tower Place at 208y/120 volts, and (5) appurtenant facilities. The project would have an annual energy generation of 1,241,000 kWh per year.

Applicant Contact: Mr. Robert Buonato, President, Wellesley Rosewood Maynard Mills LLC, 12 Clock Tower Place, Suite 200, Maynard, MA 01754; phone: 978–823–8224. FERC Contact: Alyssa Dorval, 202–502–6735.

Deadline for filing comments, motions to intervene, competing applications (without notices of intent), or notices of intent to file competing applications: 60 days from the issuance of this notice. Comments, motions to intervene, notices of intent, and competing applications may be filed electronically via the Internet. See 18 CFR 385.2001(a)(1)(iii) and the instructions on the Commission's website under the ''e-Filing'' link. If unable to be filed electronically, documents may be paper-filed. To paper-file, an original and eight copies should be mailed to: Kimberly D. Bose, Secretary, Federal Energy Regulatory Commission, 888 First Street, NE., Washington, DC 20426. For more information on how to submit these types of filings please go to the Commission's Web site located at *http://www.ferc.gov/filing-comments.asp.* More information about this project can be viewed or printed on the ''eLibrary'' link of Commission's Web site at *http://www.ferc.gov/docs-filing/elibrary.asp.* Enter the docket number (P–13228) in the docket number field to access the document. For assistance, call toll-free 1–866–208–3372.

Kimberly D. Bose,

Secretary.

[FR Doc. E8–16207 Filed 7–14–08; 8:45 am]

BILLING CODE 6717–01–P

DEPARTMENT OF ENERGY

Federal Energy Regulatory Commission

Combined Notice of Filings # 2

July 03, 2008.

Take notice that the Commission received the following electric corporate filings:

Docket Numbers: ER06–1489–002.
Applicants: S.A.C. Energy Investments, L.P.
Description: SAC Energy Investments, LP submits an updated market power analysis, request for Category 1 Seller, and rate schedule revisions pursuant to Order 697 and 697–A.
Filed Date: 06/30/2008.
Accession Number: 20080702–0007.
Comment Date: 5 p.m. Eastern Time on Monday, July 21, 2008.

Docket Numbers: ER06–19–004; ER06–761–003; ER08–620–001.
Applicants: NewPage Energy Services, LLC; Rumford Paper Company; Luke Paper Company.
Description: NewPage Energy Services, LLC et al. submits the Updated Market Power Analysis proposed tariff amendments pursuant to Order 697.
Filed Date: 06/30/2008.
Accession Number: 20080702–0194.
Comment Date: 5 p.m. Eastern Time on Monday, July 21, 2008.

Docket Numbers: ER06–234–001; ER04–1222–001.
Applicants: Deutsche Bank AG; DB Energy Trading LLC.
Description: Deutsche Bank AG et al. submits an application for designation as Category 1 sellers pursuant to Orders 697 and 697–A compliance filings, in the alternative, providing updated market power analysis etc.
Filed Date: 06/30/2008.
Accession Number: 20080702–0211.
Comment Date: 5 p.m. Eastern Time on Monday, July 21, 2008.

Docket Numbers: ER06–271–001; ER06–270–001.
Applicants: Solios Power LLC; Solios Asset Management LLC.
Description: Solios Power, LLC and Solios Asset Management, LLC submits a request for Category 1 Seller Classification and compliance filing.
Filed Date: 06/30/2008.
Accession Number: 20080702–0094.
Comment Date: 5 p.m. Eastern Time on Monday, July 21, 2008.

Docket Numbers: ER06–740–003.
Applicants: Indeck Energy Services of Silver Springs.
Description: Indeck Energy Services of Silver Springs, Inc. submits an application for determination of their status as a Category 1 seller pursuant to Order 697.
Filed Date: 06/30/2008.
Accession Number: 20080702–0199.
Comment Date: 5 p.m. Eastern Time on Monday, July 21, 2008.

Docket Numbers: ER06–1399–006.
Applicants: Sunbury Generation LP.
Description: Sunbury Generation LP submits its compliance filing pursuant to Order 697 issued by FERC on 6/21/07.
Filed Date: 06/27/2008.
Accession Number: 20080702–0187.
Comment Date: 5 p.m. Eastern Time on Friday, July 18, 2008.

Docket Numbers: ER07–30–002.
Applicants: RC Cape May Holdings, LLC.
Description: RC Cape May Holdings, LLC submits an updated market power analysis in support of its continued authorization to make wholesale sales electric energy, capacity and ancillary services at market-based rates.
Filed Date: 06/27/2008.
Accession Number: 20080701–0030.
Comment Date: 5 p.m. Eastern Time on Friday, July 18, 2008.

Docket Numbers: ER07–1019–005; ER07–1020–005; ER07–1021–005.
Applicants: Niagara Mohawk Power Corporation.
Description: Niagara Mohawk Power Corp. submits amended interconnection agreements with Alliance Energy et al.
Filed Date: 06/30/2008.
Accession Number: 20080702–0012.
Comment Date: 5 p.m. Eastern Time on Monday, July 21, 2008.

Docket Numbers: ER07–1050–001.
Applicants: PJM Interconnection, LLC.
Description: PJM Interconnection, LLC submits revised sheets to the PJM Open Access Transmission Tariff and the Amended and Restated Operating Agreement of PJM Interconnection, LLC etc.
Filed Date: 06/30/2008.
Accession Number: 20080702–0117.
Comment Date: 5 p.m. Eastern Time on Monday, July 21, 2008.

Docket Numbers: ER07–1088–001.
Applicants: RBC Energy Services LP.
Description: RBC Energy Services, LP's Order 697 Compliance Filing, Application for Category 1 Status, and filing of pro forma tariff changes.
Filed Date: 06/30/2008.
Accession Number: 20080702–0005.
Comment Date: 5 p.m. Eastern Time on Monday, July 21, 2008.

Docket Numbers: ER07–1106–001.
Applicants: ArcLight Energy Marketing, LLC.
Description: ArcLight Energy Marketing, LLC submits request for Category 1 Seller classification in the Northeast region etc.
Filed Date: 06/30/2008.
Accession Number: 20080702–0128.
Comment Date: 5 p.m. Eastern Time on Monday, July 21, 2008.

Docket Numbers: ER07–1193–001.
Applicants: CPV Liberty, LLC.
Description: CPV Liberty, LLC submits a market power update in compliance with the Commission's order granting CPV Liberty's market-based rate authority, and Order 697.
Filed Date: 06/30/2008.
Accession Number: 20080702–0127.
Comment Date: 5 p.m. Eastern Time on Monday, July 21, 2008.

Docket Numbers: ER07–1212–001.
Applicants: Forked River Power LLC.
Description: Application of Forked River Power LLC for Finding as a Category 1 Seller.
Filed Date: 06/30/2008.
Accession Number: 20080630–5153.
Comment Date: 5 p.m. Eastern Time on Monday, July 21, 2008.

Docket Numbers: ER07–1221–004.
Applicants: Rensselaer Cogeneration LLC.
Description: Rensselaer Cogeneration LLC submits its market power analysis,

together with six clean and six redlined copies of its revised tariff reflecting Category 1 status.

Filed Date: 06/30/2008.

Accession Number: 20080702–0123.

Comment Date: 5 p.m. Eastern Time on Monday, July 21, 2008.

Docket Numbers: ER07–1249–004.

Applicants: Lockport Energy Associates, L.P.

Description: Lockport Energy Associates, LP submits its triennial market power analysis with respect to its authority to sell energy, capacity, and ancillary services at market-based rates.

Filed Date: 06/30/2008.

Accession Number: 20080702–0114.

Comment Date: 5 p.m. Eastern Time on Monday, July 21, 2008.

Docket Numbers: ER07–1274–001; ER98–564–010; ER05–111–004; ER08–25–003; ER08–26–003; ER08–685–002.

Applicants: TransCanada Energy Marketing ULC; TransCanada Power Marketing Ltd; TransCanada Hydro Northeast Inc.; Ocean State Power; Ocean State Power II; TransCanada Maine Wind Development Inc.

Description: TransCanada Energy Marketing ULC et al. submits its updated market power analysis supporting their continued authorization to sell power at market-based rates et al.

Filed Date: 06/27/2008; 06/30/2008.

Accession Number: 20080702–0201; 20080702–0202.

Comment Date: 5 p.m. Eastern Time on Friday, July 18, 2008.

Docket Numbers: ER07–274–002.

Applicants: Juice Energy, Inc.

Description: Juice Energy, Inc. notifies FERC that it is a Category 1 seller pursuant to Order 697–A.

Filed Date: 06/27/2008.

Accession Number: 20080701–0047.

Comment Date: 5 p.m. Eastern Time on Friday, July 18, 2008.

Docket Numbers: ER07–352–002.

Applicants: S.D. Warren Company.

Description: SD Warren Company requests for confirmation of Category 1 Status, and waiver of notice requirement of tariff amendments under the Commission's Orders 697 and 697–A.

Filed Date: 06/30/2008.

Accession Number: 20080702–0102.

Comment Date: 5 p.m. Eastern Time on Monday, July 21, 2008.

Docket Numbers: ER07–412–002; ER08–200–002; ER06–1291–002; ER07–565–001; ER07–566–001.

Applicants: Waterbury Generation, LLC, MT. Tom Generating Company LLC, FirstLight Hydro Generating Company, FirstLight Power Resources Management, L, ECP Energy I, LLC.

Description: Waterbury Generation, LLC et al. submits an updated market power analysis to conform to the requirements of Order 697.

Filed Date: 06/30/2008.

Accession Number: 20080702–0096.

Comment Date: 5 p.m. Eastern Time on Monday, July 21, 2008.

Docket Numbers: ER07–466–002.

Applicants: MET MA, LLC.

Description: MET MA, LLC submits Order 697 compliance filing and Application for Category 1 Status.

Filed Date: 06/30/2008.

Accession Number: 20080702–0119.

Comment Date: 5 p.m. Eastern Time on Monday, July 21, 2008.

Docket Numbers: ER07–515–001.

Applicants: Domtar Corporation.

Description: Domtar Corp. submits its Triennial Market Power Update and amendments to its Market-Based Rate Tariff.

Filed Date: 06/30/2008.

Accession Number: 20080702–0091.

Comment Date: 5 p.m. Eastern Time on Monday, July 21, 2008.

Docket Numbers: ER07–818–001.

Applicants: Indeck-Olean Limited Partnership.

Description: Indeck-Olean Limited Partnership submits Order 697 compliance filing and Application for Category 1 Status.

Filed Date: 06/30/2008.

Accession Number: 20080702–0120.

Comment Date: 5 p.m. Eastern Time on Monday, July 21, 2008.

Docket Numbers: ER08–100–002; ER07–265–002.

Applicants: Sempra Energy Trading LLC; Sempra Energy Solutions LLC.

Description: Sempra Energy Trading LLC et al. submits a request for classification of their status as a Category 1 seller pursuant to Order 697–A.

Filed Date: 06/30/2008.

Accession Number: 20080702–0014.

Comment Date: 5 p.m. Eastern Time on Monday, July 21, 2008.

Docket Numbers: ER08–125–004.

Applicants: Luminant Energy Company LLC.

Description: Petition for determination of status as a Category 1 Seller pursuant to Order 697 re Luminant Energy Company LLC.

Filed Date: 06/30/2008.

Accession Number: 20080702–0121.

Comment Date: 5 p.m. Eastern Time on Monday, July 21, 2008.

Docket Numbers: ER08–237–001.

Applicants: Forward Energy LLC.

Description: Forward Energy LLC submits non-material changes in the characteristics relied upon to grant market-based rate authority to Forward Energy.

Filed Date: 06/27/2008.

Accession Number: 20080701–0049.

Comment Date: 5 p.m. Eastern Time on Friday, July 18, 2008.

Docket Numbers: ER08–303–003; ER03–1331–005.

Applicants: Williams Gas Marketing, Inc.; Williams Power Company, Inc.

Description: Supplemental Information of Williams Gas Marketing, Inc.

Filed Date: 06/30/2008.

Accession Number: 20080630–5150.

Comment Date: 5 p.m. Eastern Time on Monday, July 21, 2008.

Docket Numbers: ER08–338–001.

Applicants: Nexen Marketing U.S.A. Inc.

Description: Nexen Marketing USA, Inc submits proposed revisions to Original Sheet 1 et al. to FERC Electric Tariff, Original Volume 1.

Filed Date: 06/30/2008.

Accession Number: 20080702–0011.

Comment Date: 5 p.m. Eastern Time on Monday, July 21, 2008.

Docket Numbers: ER08–364–003.

Applicants: APX, Inc.

Description: APX, Inc request that the Commission find that it qualifies as a Category 1 seller in accordance with Order 697.

Filed Date: 06/30/2008.

Accession Number: 20080702–0010.

Comment Date: 5 p.m. Eastern Time on Monday, July 21, 2008.

Docket Numbers: ER08–387–005; ER07–254–008; ER08–912–001; ER08–933–001; ER07–195–008; ER08–934–002; ER07–1378–007.

Applicants: Casselman Windpower, LLC, Providence Heights Wind, LLC, Locust Ridge Wind Farm, LLC, Lempster Wind, LLC, IBERDROLA RENEWABLES, Inc., Locust Ridge II, LLC, Atlantic Renewables Projects II LLC.

Description: Application for Determination of Category 1 Status.

Filed Date: 06/30/2008.

Accession Number: 20080630–5154.

Comment Date: 5 p.m. Eastern Time on Monday, July 21, 2008.

Docket Numbers: ER08–415–002.

Applicants: Potomac Electric Power Company.

Description: Potomac Electric Power Co submits its compliance filing with the required modifications to the Construction Agreement with Mirant Mid-Atlantic, LLC.

Filed Date: 06/27/2008.

Accession Number: 20080702–0103.

Comment Date: 5 p.m. Eastern Time on Friday, July 18, 2008.

Docket Numbers: ER08–656–002; ER96–25–033; ER01–1363–011.

Applicants: Shell Energy North America (U.S.), L.P.; Coral Power, L.L.C.; Coral Energy Management, LLC.
Description: Shell Energy North American (US), LP et al. submits an updated market power analysis and notice of change in status in compliance with Order 697–A.
Filed Date: 06/30/2008.
Accession Number: 20080702–0090.
Comment Date: 5 p.m. Eastern Time on Monday, July 21, 2008.

Docket Numbers: ER08–760–002.
Applicants: California Independent System Operator Corporation.
Description: California Independent System Operator Corporation submits revisions to the ISO Tariff & Revisions to include designation of a TCPM Capacity Resource etc in compliance with the Commission's 3/30/08 Order.
Filed Date: 06/30/2008.
Accession Number: 20080702–0125.
Comment Date: 5 p.m. Eastern Time on Monday, July 21, 2008.

Docket Numbers: ER08–780–003.
Applicants: PJM Interconnection, L.L.C.
Description: PJM Interconnection, LLC submits the Amended and Restated Operating Agreement of the PJM Open Access Transmission Tariff in compliance with the 5/30/08 Order.
Filed Date: 06/30/2008.
Accession Number: 20080702–0116.
Comment Date: 5 p.m. Eastern Time on Monday, July 21, 2008.

Docket Numbers: ER08–806–001.
Applicants: Midwest Independent Transmission System Operator, Inc.
Description: Midwest Independent Transmission System Operator, Inc submits the Substitute First Revised Large Generator Interconnection Agreement with Summit Wind, LLC et al. in compliance with the Commission's 5/28/08 Order.
Filed Date: 06/30/2008.
Accession Number: 20080702–0013.
Comment Date: 5 p.m. Eastern Time on Monday, July 21, 2008.

Docket Numbers: ER08–1049–001.
Applicants: MidAmerican Energy Company.
Description: MidAmerican Energy Company submits Substitute First Revised Sheet 201 to their Open Access Transmission Tariff etc, effective 8/1/08.
Filed Date: 06/30/2008.
Accession Number: 20080702–0100.
Comment Date: 5 p.m. Eastern Time on Monday, July 14, 2008.

Docket Numbers: ER08–1050–001.
Applicants: Dragon Energy LLC.
Description: Dragon Energy, LLC submits revisions to its application for authorization to make wholesale sales of energy and capacity etc.
Filed Date: 07/01/2008.
Accession Number: 20080702–0082.
Comment Date: 5 p.m. Eastern Time on Tuesday, July 11, 2008.

Docket Numbers: ER08–1051–001.
Applicants: NSTAR Electric Company.
Description: NSTAR Electric Company—CWIP Supplement to Annual Informational Filing.
Filed Date: 06/30/2008.
Accession Number: 20080630–5060.
Comment Date: 5 p.m. Eastern Time on Friday, July 11, 2008.

Docket Numbers: ER08–1125–001.
Applicants: Brookfield Renewable Energy Marketing US.
Description: Brookfield Renewable Energy Marketing US LLC submits an amendment to its Application for Market-Based Rate Authorization etc.
Filed Date: 06/27/2008.
Accession Number: 20080701–0080.
Comment Date: 5 p.m. Eastern Time on Friday, July 18, 2008.

Docket Numbers: ER08–1160–000.
Applicants: Sconza Candy Company.
Description: Withdrawal of Notification of Succession/Change of Ownership for Sconza Candy Company under ER08–1160.
Filed Date: 07/01/2008.
Accession Number: 20080701–5073.
Comment Date: 5 p.m. Eastern Time on Tuesday, July 22, 2008.

Docket Numbers: ER08–1164–000.
Applicants: Escanaba Paper Co.
Description: Escanaba Paper Co submits an application for market-based rate authorization and certain waivers and blanket authorizations.
Filed Date: 06/27/2008.
Accession Number: 20080702–0189.
Comment Date: 5 p.m. Eastern Time on Friday, July 18, 2008.

Docket Numbers: ER08–1172–000.
Applicants: Grand Ridge Energy LLC.
Description: Grand Ridge Energy LLC submits authorization to make market-based wholesale sales of energy, capacity, and ancillary services under Grand Ridge's FERC Electric Tariff 1.
Filed Date: 06/30/2008.
Accession Number: 20080702–0105.
Comment Date: 5 p.m. Eastern Time on Monday, July 21, 2008.

Docket Numbers: ER08–1174–000.
Applicants: Southwestern Electric Power Company.
Description: Southwestern Electric Power Co submits a notice of cancellation of First revised Rate Schedule 109 et al.
Filed Date: 06/27/2008.
Accession Number: 20080701–0055.
Comment Date: 5 p.m. Eastern Time on Friday, July 18, 2008.

Docket Numbers: ER08–1182–000.
Applicants: Southern California Edison Company.
Description: Southern California Edison Co submits revised rate sheets to the Interconnection Facilities Agreement with the City of Industry.
Filed Date: 06/30/2008.
Accession Number: 20080701–0064.
Comment Date: 5 p.m. Eastern Time on Monday, July 21, 2008.

Docket Numbers: ER08–1183–000.
Applicants: Portland General Electric Company.
Description: Portland General Electric Co submits proposed revisions to Schedules 4 and 4-R.
Filed Date: 06/30/2008.
Accession Number: 20080701–0065.
Comment Date: 5 p.m. Eastern Time on Monday, July 21, 2008.

Docket Numbers: ER08–1185–000.
Applicants: Avista Corporation.
Description: Avista Corp submits an amended and restated Interconnection and Operating Agreement with Northern Lights, Inc.
Filed Date: 06/30/2008.
Accession Number: 20080702–0083.
Comment Date: 5 p.m. Eastern Time on Monday, July 21, 2008.

Docket Numbers: ER08–1186–000.
Applicants: Duke Energy Shared Service, Inc.
Description: Duke Energy Shared Services, Inc submits Notice of Cancellation of the Duke Midwest Operating Companies, FERC Electric tariff, First Revised Volume 8.
Filed Date: 06/30/2008.
Accession Number: 20080702–0124.
Comment Date: 5 p.m. Eastern Time on Monday, July 21, 2008.

Docket Numbers: ER08–1187–000.
Applicants: American Transmission Systems, Incorporated.
Description: American Transmission Systems, Inc submits a Construction Agreement with Northern Lights, Inc. et al.
Filed Date: 06/30/2008.
Accession Number: 20080702–0084.
Comment Date: 5 p.m. Eastern Time on Monday, July 21, 2008.

Docket Numbers: ER08–1188–000.
Applicants: Central Maine Power Company.
Description: Central Maine Power Co submits its annual update to the formula rates in Schedule 21-CMP, to be effective 6/1/08.
Filed Date: 06/30/2008.
Accession Number: 20080702–0085.
Comment Date: 5 p.m. Eastern Time on Monday, July 21, 2008.

Docket Numbers: ER08–1189–000.
Applicants: IndeckYerkes Ltd Partnership.

Description: Indeck-Yerkes LP submits an application for order accepting initial tariff and granting Category 1 status pursuant to Order 697.
Filed Date: 06/30/2008.
Accession Number: 20080702–0155.
Comment Date: 5 p.m. Eastern Time on Monday, July 21, 2008.

Docket Numbers: ER08–1190–000.
Applicants: RPL Holdings, Inc.
Description: RPL Holdings, Inc submits its proposed FERC Electric Tariff, Original Volume 2 and supporting cost data under ER08–1190.
Filed Date: 07/01/2008.
Accession Number: 20080702–0158.
Comment Date: 5 p.m. Eastern Time on Tuesday, July 22, 2008.

Docket Numbers: ER08–1191–000.
Applicants: The American Electric Power Service Corp.
Description: The American Electric Power Service Corp on behalf of AEP Operating Companies submits a third revision to the Interconnection and Local Delivery Service Agreement with the City of St Clairsville.
Filed Date: 06/30/2008.
Accession Number: 20080702–0087.
Comment Date: 5 p.m. Eastern Time on Monday, July 21, 2008.

Docket Numbers: ER08–1192–000.
Applicants: El Paso Electric Company.
Description: El Paso Electric Co submits the Facilities Modification and Construction Agreement for Holloman Station et al. upgrades with Public Service Co of New Mexico.
Filed Date: 06/30/2008.
Accession Number: 20080702–0088.
Comment Date: 5 p.m. Eastern Time on Monday, July 21, 2008.

Docket Numbers: ER08–1194–000.
Applicants: Columbia Energy LLC.
Description: Columbia Energy LLC submits its Rate Schedule FERC No. 1, to be effective 7/1/08.
Filed Date: 06/30/2008.
Accession Number: 20080702–0089.
Comment Date: 5 p.m. Eastern Time on Monday, July 21, 2008.

Docket Numbers: ER08–1196–000.
Applicants: New York Independent System Operator, Inc.
Description: New York Independent System Operator, In submits proposed amendment to its Market Administration and Control Area Services Tariff.
Filed Date: 07/01/2008.
Accession Number: 20080703–0145.
Comment Date: 5 p.m. Eastern Time on Tuesday, July 22, 2008.

Docket Numbers: ER08–1197–000.
Applicants: Southwest Power Pool, Inc.
Description: Southwest Power Pool, Inc submits a notice of cancellation for a Network Integration Transmission Service Agreement etc under ER08–1197.
Filed Date: 07/01/2008.
Accession Number: 20080703–0146.
Comment Date: 5 p.m. Eastern Time on Tuesday, July 22, 2008.

Docket Numbers: ER08–1198–000.
Applicants: Southwestern Electric Power Company.
Description: Southwestern Electric Power Co submits the actuarial reports with respect to actual post-employment benefits other than pensions etc.
Filed Date: 07/01/2008.
Accession Number: 20080703–0144.
Comment Date: 5 p.m. Eastern Time on Tuesday, July 22, 2008.

Docket Numbers: ER08–1199–000.
Applicants: Southwest Power Pool, Inc.
Description: Southwest Power Pool, Inc submits an executed Service Agreement for Network Integration Transmission Service with Kansas Electric Power Cooperative, Inc.
Filed Date: 07/01/2008.
Accession Number: 20080703–0143.
Comment Date: 5 p.m. Eastern Time on Tuesday, July 22, 2008.

Docket Numbers: ER08–1208–000.
Applicants: American Electric Power Service Corporat.
Description: AEP Operating Companies submits a second revision to the Interconnection and Local Delivery Service Agreement with City of Clyde.
Filed Date: 07/02/2008.
Accession Number: 20080703–0149.
Comment Date: 5 p.m. Eastern Time on Wednesday, July 23, 2008.

Take notice that the Commission received the following public utility holding company filings:

Docket Numbers: PH08–30–000.
Applicants: General Electric Company.
Description: Revised Exemption Notification of General Electric Company.
Filed Date: 06/30/2008.
Accession Number: 20080630–5157.
Comment Date: 5 p.m. Eastern Time on Monday, July 21, 2008.

Any person desiring to intervene or to protest in any of the above proceedings must file in accordance with Rules 211 and 214 of the Commission's Rules of Practice and Procedure (18 CFR 385.211 and 385.214) on or before 5 p.m. Eastern time on the specified comment date. It is not necessary to separately intervene again in a subdocket related to a compliance filing if you have previously intervened in the same docket. Protests will be considered by the Commission in determining the appropriate action to be taken, but will not serve to make protestants parties to the proceeding. Anyone filing a motion to intervene or protest must serve a copy of that document on the Applicant. In reference to filings initiating a new proceeding, interventions or protests submitted on or before the comment deadline need not be served on persons other than the Applicant.

The Commission encourages electronic submission of protests and interventions in lieu of paper, using the FERC Online links at *http://www.ferc.gov.* To facilitate electronic service, persons with Internet access who will eFile a document and/or be listed as a contact for an intervenor must create and validate an eRegistration account using the eRegistration link. Select the eFiling link to log on and submit the intervention or protests.

Persons unable to file electronically should submit an original and 14 copies of the intervention or protest to the Federal Energy Regulatory Commission, 888 First St. NE., Washington, DC 20426.

The filings in the above proceedings are accessible in the Commission's eLibrary system by clicking on the appropriate link in the above list. They are also available for review in the Commission's Public Reference Room in Washington, DC. There is an eSubscription link on the Web site that enables subscribers to receive e-mail notification when a document is added to a subscribed dockets(s). For assistance with any FERC Online service, please e-mail *FERCOnlineSupport@ferc.gov.* or call (866) 208–3676 (toll free). For TTY, call (202) 502–8659.

Nathaniel J. Davis, Sr.,
Deputy Secretary.
[FR Doc. E8–16056 Filed 7–14–08; 8:45 am]
BILLING CODE 6717–01–P

DEPARTMENT OF ENERGY

Federal Energy Regulatory Commission

Combined Notice of Filings #2

July 3, 2008.

Take notice that the Commission received the following electric corporate filings:

Docket Numbers: ER06–1489–002.
Applicants: S.A.C. Energy Investments, L.P.
Description: SAC Energy Investments, LP submits an updated market power analysis, request for Category 1 Seller,

and rate schedule revisions pursuant to Order 697 and 697–A.

Filed Date: 06/30/2008.

Accession Number: 20080702–0007.

Comment Date: 5 p.m. Eastern Time on Monday, July 21, 2008.

Docket Numbers: ER06–19–004; ER06–761–003; ER08–620–001.

Applicants: NewPage Energy Services, LLC; Rumford Paper Company; Luke Paper Company.

Description: NewPage Energy Services, LLC et al. submits the Updated Market Power Analysis proposed tariff amendments pursuant to Order 697.

Filed Date: 06/30/2008.

Accession Number: 20080702–0194.

Comment Date: 5 p.m. Eastern Time on Monday, July 21, 2008.

Docket Numbers: ER06–234–001; ER04–1222–001.

Applicants: Deutsche Bank AG; DB Energy Trading LLC.

Description: Deutsche Bank AG et al. submits an application for designation as Category 1 sellers pursuant to Orders 697 and 697–A compliance filings, in the alternative, providing updated market power analysis, etc.

Filed Date: 06/30/2008.

Accession Number: 20080702–0211.

Comment Date: 5 p.m. Eastern Time on Monday, July 21, 2008.

Docket Numbers: ER06–271–001; ER06–270–001.

Applicants: Solios Power LLC; Solios Asset Management LLC.

Description: Solios Power, LLC and Solios Asset Management, LLC submits a request for Category 1 Seller Classification and compliance filing.

Filed Date: 06/30/2008.

Accession Number: 20080702–0094.

Comment Date: 5 p.m. Eastern Time on Monday, July 21, 2008.

Docket Numbers: ER06–740–003.

Applicants: Indeck Energy Services of Silver Springs.

Description: Indeck Energy Services of Silver Springs, Inc submits an application for determination of their status as a Category 1 seller pursuant to Order 697.

Filed Date: 06/30/2008.

Accession Number: 20080702–0199.

Comment Date: 5 p.m. Eastern Time on Monday, July 21, 2008.

Docket Numbers: ER06–1399–006.

Applicants: Sunbury Generation LP.

Description: Sunbury Generation LP submits its compliance filing pursuant to Order 697 issued by FERC on 6/21/07.

Filed Date: 06/27/2008.

Accession Number: 20080702–0187.

Comment Date: 5 p.m. Eastern Time on Friday, July 18, 2008.

Docket Numbers: ER07–30–002.

Applicants: RC Cape May Holdings, LLC.

Description: RC Cape May Holdings, LLC submits an updated market power analysis in support of its continued authorization to make wholesale sales electric energy, capacity and ancillary services at market-based rated.

Filed Date: 06/27/2008.

Accession Number: 20080701–0030.

Comment Date: 5 p.m. Eastern Time on Friday, July 18, 2008.

Docket Numbers: ER07–1019–005; ER07–1020–005; ER07–1021–005.

Applicants: Niagara Mohawk Power Corporation.

Description: Niagara Mohawk Power Corp submits amended interconnection agreements with Alliance Energy *et al.*

Filed Date: 06/30/2008.

Accession Number: 20080702–0012.

Comment Date: 5 p.m. Eastern Time on Monday, July 21, 2008.

Docket Numbers: ER07–1050–001.

Applicants: PJM Interconnection, L.L.C.

Description: PJM Interconnection, LLC submits revised sheets to the PJM open Access Transmission Tariff and the Amended and Restated Operating Agreement of PJM Interconnection, LLC etc.

Filed Date: 06/30/2008.

Accession Number: 20080702–0117.

Comment Date: 5 p.m. Eastern Time on Monday, July 21, 2008.

Docket Numbers: ER07–1088–001.

Applicants: RBC Energy Services LP.

Description: RBC Energy Services, LP's Order 697 Compliance Filing Application for Category 1 Status and filing of pro forma tariff changes.

Filed Date: 06/30/2008.

Accession Number: 20080702–0005.

Comment Date: 5 p.m. Eastern Time on Monday, July 21, 2008.

Docket Numbers: ER07–1106–001.

Applicants: ArcLight Energy Marketing, LLC.

Description: ArcLight Energy Marketing, LLC submits request for Category 1 Seller classification in the Northeast region, etc.

Filed Date: 06/30/2008.

Accession Number: 20080702–0128.

Comment Date: 5 p.m. Eastern Time on Monday, July 21, 2008.

Docket Numbers: ER07–1193–001.

Applicants: CPV Liberty, LLC.

Description: CPV Liberty, LLC submits a market power update in compliance with the Commission's order granting CPV Liberty's market-based rate authority, and Order 697.

Filed Date: 06/30/2008.

Accession Number: 20080702–0127.

Comment Date: 5 p.m. Eastern Time on Monday, July 21, 2008.

Docket Numbers: ER07–1212–001.

Applicants: Forked River Power LLC.

Description: Application of Forked River Power LLC for Finding as a Category 1 Seller.

Filed Date: 06/30/2008.

Accession Number: 20080630–5153.

Comment Date: 5 p.m. Eastern Time on Monday, July 21, 2008.

Docket Numbers: ER07–1221–004.

Applicants: Rensselaer Cogeneration LLC.

Description: Rensselaer Cogeneration LLC submits its market power analysis, together with six clean and six redlined copies of its revised tariff reflecting Category 1 status.

Filed Date: 06/30/2008.

Accession Number: 20080702–0123.

Comment Date: 5 p.m. Eastern Time on Monday, July 21, 2008.

Docket Numbers: ER07–1249–004.

Applicants: Lockport Energy Associates, L.P.

Description: Lockport Energy Associates LP submits its triennial market power analysis with respect to its authority to sell energy, capacity, and ancillary services at market based rates.

Filed Date: 06/30/2008.

Accession Number: 20080702–0114.

Comment Date: 5 p.m. Eastern Time on Monday, July 21, 2008.

Docket Numbers: ER07–1274–001; ER98–564–010; ER05–111–004; ER08–25–003; ER08–26–003; ER08–685–002.

Applicants: TransCanada Energy Marketing ULC; TransCanada Power Marketing Ltd; TransCanada Hydro Northeast Inc.; Ocean State Power; Ocean State Power II; TransCanada Maine Wind Development Inc.

Description: TransCanada Energy Marketing ULC et al. submits its updated market power analysis supporting their continued authorization to sell power at market-based rates *et al.*

Filed Date: 06/27/2008; 06/30/2008.

Accession Number: 20080702–0201; 20080702–0202.

Comment Date: 5 p.m. Eastern Time on Friday, July 18, 2008.

Docket Numbers: ER07–274–002.

Applicants: Juice Energy, Inc.

Description: Juice Energy, Inc notifies FERC that it is a Category 1 seller pursuant to Order 697–A.

Filed Date: 06/27/2008.

Accession Number: 20080701–0047.

Comment Date: 5 p.m. Eastern Time on Friday, July 18, 2008.

Docket Numbers: ER07–352–002.

Applicants: S.D. Warren Company.

Description: S.D. Warren Company requests for confirmation of Category 1 Status, and waiver of notice requirement of tariff amendments under the Commission's Orders 697 and 697–A

Fiiled Date: 06/30/2008.
Accession Number: 20080702–0102.
Comment Date: 5 p.m. Eastern Time on Monday, July 21, 2008.

Docket Numbers: ER07–412–002; ER08–200–002; ER06–1291–002; ER07–565–001; ER07–566–001.
Applicants: Waterbury Generation, LLC, MT. Tom Generating Company LLC, FirstLight Hydro Generating Company, FirstLight Power Resources Management, L, ECP Energy I, LLC.
Description: Waterbury Generation, LLC et al. submits an updated market power analysis to conform to the requirements of Order 697.
Filed Date: 06/30/2008.
Accession Number: 20080702–0096.
Comment Date: 5 p.m. Eastern Time on Monday, July 21, 2008.

Docket Numbers: ER07–466–002.
Applicants: MET MA, LLC.
Description: MET MA, LLC submits Order 697 compliance filing and Application for Category 1 Status.
Filed Date: 06/30/2008.
Accession Number: 20080702–0119.
Comment Date: 5 p.m. Eastern Time on Monday, July 21, 2008.

Docket Numbers: ER07–515–001.
Applicants: Domtar Corporation.
Description: Domtar Corp. submits its Triennial Market Power Update and amendments to its Market-Based Rate Tariff.
Filed Date: 06/30/2008.
Accession Number: 20080702–0091.
Comment Date: 5 p.m. Eastern Time on Monday, July 21, 2008.

Docket Numbers: ER07–818–001.
Applicants: Indeck-Olean Limited Partnership.
Description: Indeck-Olean Limited Partnership submits Order 697 compliance filing and Application for Category 1 Status.
Filed Date: 06/30/2008.
Accession Number: 20080702–0120.
Comment Date: 5 p.m. Eastern Time on Monday, July 21, 2008.

Docket Numbers: ER08–100–002; ER07–265–002.
Applicants: Sempra Energy Trading LLC; Sempra Energy Solutions LLC
Description: Sempra Energy Trading LLC et al. submits a request for classification of their status as a Category 1 seller pursuant to Order 697–A.
Filed Date: 06/30/2008.
Accession Number: 20080702–0014.
Comment Date: 5 p.m. Eastern Time on Monday, July 21, 2008.

Docket Numbers: ER08–125–004.
Applicants: Luminant Energy Company LLC.
Description: Petition for determination of status as a Category 1 Seller pursuant to Order 697 re Luminant Energy Company LLC.
Filed Date: 06/30/2008.
Accession Number: 20080702–0121.
Comment Date: 5 p.m. Eastern Time on Monday, July 21, 2008.

Docket Numbers: ER08–237–001.
Applicants: Forward Energy LLC.
Description: Forward Energy LLC submits non-material changes in the characteristics relied upon to grant market-based rate authority to Forward Energy.
Filed Date: 06/27/2008.
Accession Number: 20080701–0049.
Comment Date: 5 p.m. Eastern Time on Friday, July 18, 2008.

Docket Numbers: ER08–303–003; ER03–1331–005.
Applicants: Williams Gas Marketing, Inc.; Williams Power Company, Inc.
Description: Supplemental Information of Williams Gas Marketing, Inc.
Filed Date: 06/30/2008.
Accession Number: 20080630–5150.
Comment Date: 5 p.m. Eastern Time on Monday, July 21, 2008.

Docket Numbers: ER08–338–001.
Applicants: Nexen Marketing U.S.A. Inc.
Description: Nexen Marketing USA, Inc submits proposed revisions to Original Sheet 1 et al. to FERC Electric Tariff, Original Volume 1.
Filed Date: 06/30/2008.
Accession Number: 20080702–0011.
Comment Date: 5 p.m. Eastern Time on Monday, July 21, 2008.

Docket Numbers: ER08–364–003.
Applicants: APX, Inc.
Description: APX, Inc request that the Commission find that it qualifies as a Category 1 seller in accordance with Order 697.
Filed Date: 06/30/2008.
Accession Number: 20080702–0010.
Comment Date: 5 p.m. Eastern Time on Monday, July 21, 2008.

Docket Numbers: ER08–387–005; ER07–254–008; ER08–912–001; ER08–933–001; ER07–195–008; ER08–934–002; ER07–1378–007.
Applicants: Casselman Windpower, LLC, Providence Heights Wind, LLC, Locust Ridge Wind Farm, LLC, Lempster Wind, LLC, Iberdrola Renewables, Inc., Locust Ridge II, LLC, Atlantic Renewables Projects II LLC.
Description: Application for Determination of Category 1 Status.
Filed Date: 06/30/2008.
Accession Number: 20080630–5154.
Comment Date: 5 p.m. Eastern Time on Monday, July 21, 2008.

Docket Numbers: ER08–415–002.
Applicants: Potomac Electric Power Company.
Description: Potomac Electric Power Co. submits its compliance filing with the required modifications to the Construction Agreement with Mirant Mid-Atlantic, LLC.
Filed Date: 06/27/2008.
Accession Number: 20080702–0103.
Comment Date: 5 p.m. Eastern Time on Friday, July 18, 2008.

Docket Numbers: ER08–656–002; ER96–25–033; ER01–1363–011.
Applicants: Shell Energy North America (U.S.), L.P.; Coral Power, L.L.C.; Coral Energy Management, LLC.
Description: Shell Energy North American (US), LP et al. submits an updated market power analysis and notice of change in status in compliance with Order 697–A.
Filed Date: 06/30/2008.
Accession Number: 20080702–0090.
Comment Date: 5 p.m. Eastern Time on Monday, July 21, 2008.

Docket Numbers: ER08–760–002.
Applicants: California Independent System Operator Corporation.
Description: California Independent System Operator Corporation submits revisions to the ISO Tariff & Revisions to include designation of a TCPM Capacity Resource etc in compliance with the Commission's 3/30/08 Order.
Filed Date: 06/30/2008.
Accession Number: 20080702–0125.
Comment Date: 5 p.m. Eastern Time on Monday, July 21, 2008.

Docket Numbers: ER08–780–003.
Applicants: PJM Interconnection, L.L.C.
Description: PJM Interconnection, LLC submits the Amended and Restated Operating Agreement of the PJM Open Access Transmission Tariff in compliance with the 5/30/08 Order.
Filed Date: 06/30/2008.
Accession Number: 20080702–0116.
Comment Date: 5 p.m. Eastern Time on Monday, July 21, 2008.

Docket Numbers: ER08–806–001.
Applicants: Midwest Independent Transmission System Operator, Inc.
Description: Midwest Independent Transmission System Operator, Inc submits the Substitute First Revised Large Generator Interconnection Agreement with Summit Wind, LLC et al. in compliance with the Commission's 5/28/08 Order.
Filed Date: 06/30/2008.
Accession Number: 20080702–0013.
Comment Date: 5 p.m. Eastern Time on Monday, July 21, 2008.

Docket Numbers: ER08–1049–001.
Applicants: MidAmerican Energy Company.
Description: MidAmerican Energy Company submits Substitute First Revised Sheet 201 to their Open Access Transmission Tariff etc, effective 8/1/08.

Filed Date: 06/30/2008.
Accession Number: 20080702–0100.
Comment Date: 5 p.m. Eastern Time on Monday, July 14, 2008.

Docket Numbers: ER08–1050–001.
Applicants: Dragon Energy LLC.
Description: Dragon Energy, LLC submits revisions to its application for authorization to make wholesale sales of energy and capacity etc.
Filed Date: 07/01/2008.
Accession Number: 20080702–0082.
Comment Date: 5 p.m. Eastern Time on Tuesday, July 11, 2008.

Docket Numbers: ER08–1051–001.
Applicants: NSTAR Electric Company.
Description: NSTAR Electric Company—CWIP Supplement to Annual Informational Filing.
Filed Date: 06/30/2008.
Accession Number: 20080630–5060.
Comment Date: 5 p.m. Eastern Time on Friday, July 11, 2008.

Docket Numbers: ER08–1125–001.
Applicants: Brookfield Renewable Energy Marketing US.
Description: Brookfield Renewable Energy Marketing US LLC submits an amendment to its Application for Market-Based Rate Authorization etc.
Filed Date: 06/27/2008.
Accession Number: 20080701–0080.
Comment Date: 5 p.m. Eastern Time on Friday, July 18, 2008.

Docket Numbers: ER08–1160–000.
Applicants: Sconza Candy Company.
Description: Withdrawal of Notification of Succession/Change of Ownership for Sconza Candy Company under ER08–1160.
Filed Date: 07/01/2008.
Accession Number: 20080701–5073.
Comment Date: 5 p.m. Eastern Time on Tuesday, July 22, 2008.

Docket Numbers: ER08–1164–000.
Applicants: Escanaba Paper Co.
Description: Escanaba Paper Co submits an application for market-based rate authorization and certain waivers and blanket authorizations.
Filed Date: 06/27/2008.
Accession Number: 20080702–0189.
Comment Date: 5 p.m. Eastern Time on Friday, July 18, 2008.

Docket Numbers: ER08–1172–000.
Applicants: Grand Ridge Energy LLC.
Description: Grand Ridge Energy LLC submits authorization to make market-based wholesale sales of energy, capacity, and ancillary services under Grand Ridge's FERC Electric Tariff 1.
Filed Date: 06/30/2008.
Accession Number: 20080702–0105.
Comment Date: 5 p.m. Eastern Time on Monday, July 21, 2008.

Docket Numbers: ER08–1174–000.
Applicants: Southwestern Electric Power Company.
Description: Southwestern Electric Power Co submits a notice of cancellation of First revised Rate Schedule 109 et al.
Filed Date: 06/27/2008.
Accession Number: 20080701–0055.
Comment Date: 5 p.m. Eastern Time on Friday, July 18, 2008.

Docket Numbers: ER08–1182–000.
Applicants: Southern California Edison Company.
Description: Southern California Edison Co submits revised rate sheets to the Interconnection Facilities Agreement with the City of Industry.
Filed Date: 06/30/2008.
Accession Number: 20080701–0064.
Comment Date: 5 p.m. Eastern Time on Monday, July 21, 2008.

Docket Numbers: ER08–1183–000.
Applicants: Portland General Electric Company.
Description: Portland General Electric Co submits proposed revisions to Schedules 4 and 4–R.
Filed Date: 06/30/2008.
Accession Number: 20080701–0065.
Comment Date: 5 p.m. Eastern Time on Monday, July 21, 2008.

Docket Numbers: ER08–1185–000.
Applicants: Avista Corporation.
Description: Avista Corp submits an amended and restated Interconnection and Operating Agreement with Northern Lights, Inc.
Filed Date: 06/30/2008.
Accession Number: 20080702–0083.
Comment Date: 5 p.m. Eastern Time on Monday, July 21, 2008.

Docket Numbers: ER08–1186–000.
Applicants: Duke Energy Shared Service, Inc.
Description: Duke Energy Shared Services, Inc submits Notice of Cancellation of the Duke Midwest Operating Companies, FERC Electric tariff, First Revised Volume 8.
Filed Date: 06/30/2008.
Accession Number: 20080702–0124.
Comment Date: 5 p.m. Eastern Time on Monday, July 21, 2008.

Docket Numbers: ER08–1187–000.
Applicants: American Transmission Systems, Incorporated.
Description: American Transmission Systems, Inc submits a Construction Agreement with Northern Lights, Inc et al.
Filed Date: 06/30/2008.
Accession Number: 20080702–0084.
Comment Date: 5 p.m. Eastern Time on Monday, July 21, 2008.

Docket Numbers: ER08–1188–000.
Applicants: Central Maine Power Company.
Description: Central Maine Power Co submits its annual update to the formula rates in Schedule 21–CMP, to be effective 6/1/08.
Filed Date: 06/30/2008.
Accession Number: 20080702–0085.
Comment Date: 5 p.m. Eastern Time on Monday, July 21, 2008.

Docket Numbers: ER08–1189–000.
Applicants: Indeck Yerkes Ltd Partnership.
Description: Indeck-Yerkes LP submits an application for order accepting initial tariff and granting Category 1 status pursuant to Order 697.
Filed Date: 06/30/2008.
Accession Number: 20080702–0155.
Comment Date: 5 p.m. Eastern Time on Monday, July 21, 2008.

Docket Numbers: ER08–1190–000.
Applicants: RPL Holdings, Inc.
Description: RPL Holdings, Inc submits its proposed FERC Electric Tariff, Original Volume 2 and supporting cost data under ER08–1190.
Filed Date: 07/01/2008.
Accession Number: 20080702–0158.
Comment Date: 5 p.m. Eastern Time on Tuesday, July 22, 2008.

Docket Numbers: ER08–1191–000.
Applicants: The American Electric Power Service Corp.
Description: The American Electric Power Service Corp on behalf of AEP Operating Companies submits a third revision to the Interconnection and Local Delivery Service Agreement with the City of St Clairsville.
Filed Date: 06/30/2008.
Accession Number: 20080702–0087.
Comment Date: 5 p.m. Eastern Time on Monday, July 21, 2008.

Docket Numbers: ER08–1192–000.
Applicants: El Paso Electric Company.
Description: El Paso Electric Co. submits the Facilities Modification and Construction Agreement for Holloman Station et al. upgrades with Public Service Co. of New Mexico.
Filed Date: 06/30/2008.
Accession Number: 20080702–0088.
Comment Date: 5 p.m. Eastern Time on Monday, July 21, 2008.

Docket Numbers: ER08–1194–000.
Applicants: Columbia Energy LLC.
Description: Columbia Energy LLC submits its Rate Schedule FERC No. 1, to be effective 7/1/08.
Filed Date: 06/30/2008.
Accession Number: 20080702–0089.
Comment Date: 5 p.m. Eastern Time on Monday, July 21, 2008.

Docket Numbers: ER08–1196–000.
Applicants: New York Independent System Operator, Inc.
Description: New York Independent System Operator, Inc. submits proposed amendment to its Market

Administration and Control Area Services Tariff.

Filed Date: 07/01/2008.

Accession Number: 20080703–0145.

Comment Date: 5 p.m. Eastern Time on Tuesday, July 22, 2008.

Docket Numbers: ER08–1197–000.

Applicants: Southwest Power Pool, Inc.

Description: Southwest Power Pool, Inc. submits a notice of cancellation for a Network Integration Transmission Service Agreement etc. under ER08–1197.

Filed Date: 07/01/2008.

Accession Number: 20080703–0146.

Comment Date: 5 p.m. Eastern Time on Tuesday, July 22, 2008.

Docket Numbers: ER08–1198–000.

Applicants: Southwestern Electric Power Company.

Description: Southwestern Electric Power Co. submits the actuarial reports with respect to actual post-employment benefits other than pensions etc.

Filed Date: 07/01/2008.

Accession Number: 20080703–0144.

Comment Date: 5 p.m. Eastern Time on Tuesday, July 22, 2008.

Docket Numbers: ER08–1199–000.

Applicants: Southwest Power Pool, Inc.

Description: Southwest Power Pool, Inc. submits an executed Service Agreement for Network Integration Transmission Service with Kansas Electric Power Cooperative, Inc.

Filed Date: 07/01/2008.

Accession Number: 20080703–0143.

Comment Date: 5 p.m. Eastern Time on Tuesday, July 22, 2008.

Docket Numbers: ER08–1208–000.

Applicants: American Electric Power Service Corporation.

Description: AEP Operating Companies submits a second revision to the Interconnection and Local Delivery Service Agreement with City of Clyde.

Filed Date: 07/02/2008.

Accession Number: 20080703–0149.

Comment Date: 5 p.m. Eastern Time on Wednesday, July 23, 2008.

Take notice that the Commission received the following public utility holding company filings:

Docket Numbers: PH08–30–000.

Applicants: General Electric Company.

Description: Revised Exemption Notification of General Electric Company.

Filed Date: 06/30/2008.

Accession Number: 20080630–5157.

Comment Date: 5 p.m. Eastern Time on Monday, July 21, 2008.

Any person desiring to intervene or to protest in any of the above proceedings must file in accordance with Rules 211 and 214 of the Commission's Rules of Practice and Procedure (18 CFR 385.211 and 385.214) on or before 5 p.m. Eastern time on the specified comment date. It is not necessary to separately intervene again in a subdocket related to a compliance filing if you have previously intervened in the same docket. Protests will be considered by the Commission in determining the appropriate action to be taken, but will not serve to make protestants parties to the proceeding. Anyone filing a motion to intervene or protest must serve a copy of that document on the Applicant. In reference to filings initiating a new proceeding, interventions or protests submitted on or before the comment deadline need not be served on persons other than the Applicant.

The Commission encourages electronic submission of protests and interventions in lieu of paper, using the FERC Online links at *http://www.ferc.gov.* To facilitate electronic service, persons with Internet access who will eFile a document and/or be listed as a contact for an intervenor must create and validate an eRegistration account using the eRegistration link. Select the eFiling link to log on and submit the intervention or protests.

Persons unable to file electronically should submit an original and 14 copies of the intervention or protest to the Federal Energy Regulatory Commission, 888 First St., NE., Washington, DC 20426.

The filings in the above proceedings are accessible in the Commission's eLibrary system by clicking on the appropriate link in the above list. They are also available for review in the Commission's Public Reference Room in Washington, DC. There is an eSubscription link on the Web site that enables subscribers to receive e-mail notification when a document is added to a subscribed docket(s). For assistance with any FERC Online service, please e-mail *FERCOnlineSupport@ferc.gov* or call (866) 208–3676 (toll free). For TTY, call (202) 502–8659.

Nathaniel J. Davis, Sr.,

Deputy Secretary.

[FR Doc. E8–16057 Filed 7–14–08; 8:45 am]

BILLING CODE 6717–01–P

DEPARTMENT OF ENERGY

Federal Energy Regulatory Commission

Combined Notice of Filings #1

July 7, 2008.

Take notice that the Commission has received the following Natural Gas Pipeline Rate and Refund Report filings:

Docket Numbers: RP08–436–000.

Applicants: Stingray Pipeline Company, L.L.C.

Description: Stingray Pipeline Company, LLC submits its rate filing including Appendicies A through E.

Filed Date: 06/30/2008.

Accession Number: 20080702–0180.

Comment Date: 5 p.m. Eastern Time on Monday, July 14, 2008.

Docket Numbers: RP08–437–000.

Applicants: CenterPoint Energy Gas Transmission Co.

Description: CenterPoint Energy Gas Transmission Company submits its FERC GAS Tariff, Sixth Revised Volume 1.

Filed Date: 07/01/2008.

Accession Number: 20080702–0301.

Comment Date: 5 p.m. Eastern Time on Monday, July 14, 2008.

Docket Numbers: CP06–421–005.

Applicants: Transcontinental Gas Pipe Line Corporation.

Description: Transcontinental Gas Pipe Line Corporation submits the Ninth Revised Sheet No. 40N to FERC Gas Tariff, Third Revised Volume No. 1, re: Potomac Expansion Project.

Filed Date: 06/20/2008.

Accession Number: 20080627–0129.

Comment Date: 5 p.m. Eastern Time on Monday, July 14, 2008.

Any person desiring to intervene or to protest in any of the above proceedings must file in accordance with Rules 211 and 214 of the Commission's Rules of Practice and Procedure (18 CFR 385.211 and 385.214) on or before 5 p.m. Eastern time on the specified comment date. It is not necessary to separately intervene again in a subdocket related to a compliance filing if you have previously intervened in the same docket. Protests will be considered by the Commission in determining the appropriate action to be taken, but will not serve to make protestants parties to the proceeding. Anyone filing a motion to intervene or protest must serve a copy of that document on the Applicant. In reference to filings initiating a new proceeding, interventions or protests submitted on or before the comment deadline need not be served on persons other than the Applicant.

The Commission encourages electronic submission of protests and

interventions in lieu of paper, using the FERC Online links at *http://www.ferc.gov.* To facilitate electronic service, persons with Internet access who will eFile a document and/or be listed as a contact for an intervenor must create and validate an eRegistration account using the eRegistration link. Select the eFiling link to log on and submit the intervention or protests.

Persons unable to file electronically should submit an original and 14 copies of the intervention or protest to the Federal Energy Regulatory Commission, 888 First St., NE., Washington, DC 20426.

The filings in the above proceedings are accessible in the Commission's eLibrary system by clicking on the appropriate link in the above list. They are also available for review in the Commission's Public Reference Room in Washington, DC. There is an eSubscription link on the Web site that enables subscribers to receive e-mail notification when a document is added to a subscribed dockets(s). For assistance with any FERC Online service, please e-mail *FERCOnlineSupport@ferc.gov.* or call (866) 208–3676 (toll free). For TTY, call (202) 502–8659.

Nathaniel J. Davis, Sr.

Deputy Secretary.

[FR Doc. E8–16058 Filed 7–14–08; 8:45 am]

BILLING CODE 6717–01–P

DEPARTMENT OF ENERGY

Federal Energy Regulatory Commission

Combined Notice of Filings # 2

July 2, 2008.

Take notice that the Commission received the following electric rate filings:

Docket Numbers: ER08–580–001.
Applicants: Ontario Power Generation Energy Trading, Inc.
Description: Ontario Power Generation Energy Trading, Inc submits the updated market power analysis and conforming market-based rate tariff in compliance with the requirements of Order 697 and 697–A.
Filed Date: 06/27/2008.
Accession Number: 20080701–0052.
Comment Date: 5 p.m. Eastern Time on Friday, July 18, 2008.

Docket Numbers: ER08–723–001.
Applicants: Wisconsin Power and Light Company.
Description: Wisconsin Power and Light Co submits Second Revised Master Power Supply Agreement that complies with FERC's Order 614.
Filed Date: 06/27/2008.
Accession Number: 20080701–0032.
Comment Date: 5 p.m. Eastern Time on Friday, July 18, 2008.

Docket Numbers: ER08–746–001.
Applicants: Southwest Power Pool, Inc.
Description: Southwest Power Pool Inc submits their compliance filing providing revisions to its Open Access Transmission Tariff.
Filed Date: 06/25/2008.
Accession Number: 20080626–0035.
Comment Date: 5 p.m. Eastern Time on Wednesday, July 16, 2008.

Docket Numbers: ER08–763–001.
Applicants: Appalachian Power Company.
Description: Appalachian Power Co submits their compliance filing.
Filed Date: 06/27/2008.
Accession Number: 20080701–0050.
Comment Date: 5 p.m. Eastern Time on Friday, July 18, 2008.

Docket Numbers: ER08–770–002.
Applicants: Longview Power, LLC.
Description: Longview Power LLC submits an updated market power analysis and tariff revisions.
Filed Date: 06/27/2008.
Accession Number: 20080701–0053.
Comment Date: 5 p.m. Eastern Time on Friday, July 18, 2008.

Docket Numbers: ER08–813–001.
Applicants: Otter Tail Power Company.
Description: Otter Tail Power Co submits their report required by the Commission's 6/5/08 Order.
Filed Date: 06/27/2008.
Accession Number: 20080701–0022.
Comment Date: 5 p.m. Eastern Time on Friday, July 18, 2008.

Docket Numbers: ER08–868–001.
Applicants: Commonwealth Edison Company.
Description: Commonwealth Edison Company of Indiana, Inc submits revised Attachment H–13 of the PJM Interconnection, LLC Open Access Transmission Tariff as directed by the 6/17/08 Order etc.
Filed Date: 06/27/2008.
Accession Number: 20080701–0031.
Comment Date: 5 p.m. Eastern Time on Friday, July 18, 2008.

Docket Numbers: ER08–900–001.
Applicants: The Potomac Edison Company.
Description: The Potomac Edison Company submits revision of FERC Rate Schedule 2, Reactive Support and Voltage Control from Generation Sources Services and on 6/25/08 submit the original affidavit of John J Rostock this filing.
Filed Date: 06/24/2008; 06/25/08.
Accession Number: 20080626–0033; 20080627–0130.
Comment Date: 5 p.m. Eastern Time on Tuesday, July 15, 2008.

Docket Numbers: ER08–953–001.
Applicants: Wisconsin Electric Power Company.
Description: Wisconsin Electric Power Co submits an errata to the 5/14/08 executed revised Facilities Agreement with City of Oconomowoc.
Filed Date: 06/25/2008.
Accession Number: 20080626–0064.
Comment Date: 5 p.m. Eastern Time on Wednesday, July 16, 2008.

Docket Numbers: ER08–981–001.
Applicants: Puget Sound Energy, Inc.
Description: Puget Sound Energy, Inc submits revised FERC Electric Tariff, Fourth Revised Volume 8.
Filed Date: 06/25/2008.
Accession Number: 20080626–0061.
Comment Date: 5 p.m. Eastern Time on Wednesday, July 16, 2008.

Docket Numbers: ER08–1042–001.
Applicants: Midwest Independent Transmission System.
Description: Midwest Independent Transmission System Operator, Inc supplements its 5/30/08 filing.
Filed Date: 06/25/2008.
Accession Number: 20080626–0034.
Comment Date: 5 p.m. Eastern Time on Wednesday, July 16, 2008.

Docket Numbers: ER08–1115–000.
Applicants: Northern Virginia Electric Cooperative.
Description: Withdrawal of Application of Northern Virginia Electric Cooperative.
Filed Date: 06/26/2008.
Accession Number: 20080626–5056.
Comment Date: 5 p.m. Eastern Time on Thursday, July 17, 2008.

Docket Numbers: ER08–1121–001.
Applicants: Royal Bank of Canada.
Description: Royal Bank of Canada supplements their Application for Order Accepting Initial Rate Schedule FERC 1 etc.
Filed Date: 06/26/2008.
Accession Number: 20080630–0003.
Comment Date: 5 p.m. Eastern Time on Thursday, July 17, 2008.

Docket Numbers: ER08–1146–000.
Applicants: Midwest Independent Transmission System, American Transmission Company LLC.
Description: ATC Management, Inc and Midwest Independent Transmission System Operator, Inc submits proposed Appendix I Agreement.
Filed Date: 06/20/2008.
Accession Number: 20080624–0033.
Comment Date: 5 p.m. Eastern Time on Friday, July 11, 2008.

Docket Numbers: ER08–1161–000.
Applicants: Southwest Power Pool, Inc.
Description: Southwest Power Pool, Inc submits revisions to Attachment AD of its Open Access Transmission Tariff to modify the Tariff Administration Agreement governing its relationship with the Southwestern Power Administration.
Filed Date: 06/24/2008.
Accession Number: 20080626–0036.
Comment Date: 5 p.m. Eastern Time on Tuesday, July 15, 2008.

Docket Numbers: ER08–1162–000.
Applicants: Southwest Power Pool, Inc.
Description: Southwest Power Pool Inc submits Service Agreement for Network Integration Transmission Service with Grand River Dam Authority.
Filed Date: 06/25/2008.
Accession Number: 20080626–0037.
Comment Date: 5 p.m. Eastern Time on Wednesday, July 16, 2008.

Docket Numbers: ER08–1163–000.
Applicants: PJM Interconnection, L.L.C.
Description: PJM Interconnection, LLC submits an executed service agreement for network integration transmission service under their Open Access Transmission Tariff with American Electric Power Service Corp et al.
Filed Date: 06/25/2008.
Accession Number: 20080626–0065.
Comment Date: 5 p.m. Eastern Time on Wednesday, July 16, 2008.

Docket Numbers: ER08–1165–000.
Applicants: MidAmerican Energy Company.
Description: MidAmerican Energy Company submits Second Revised Sheet 155 et al. to FERC Gas Tariff, Second Revised Volume 8, reflecting several changes to their Open Access Transmission Tariff, Attachment C etc.
Filed Date: 06/26/2008.
Accession Number: 20080627–0009.
Comment Date: 5 p.m. Eastern Time on Thursday, July 17, 2008.

Docket Numbers: ER08–1166–000.
Applicants: Hudson Bay Energy Solutions LLC.
Description: Hudson Bay Energy Solutions, LLC submits notice of cancellation of its Market Based Rate Tariff, FERC Electric Tariff, Original Volume 1, effective 6/27/08.
Filed Date: 06/26/2008.
Accession Number: 20080627–0010.
Comment Date: 5 p.m. Eastern Time on Thursday, July 17, 2008.

Docket Numbers: ER08–1167–000.
Applicants: Kansas City Power & Light Company.
Description: Kansas City Power & Light Company submits the Revised and Restated Amendatory Agreement 1 to Municipal Participation Agreement with the City of Higginsville, MO.
Filed Date: 06/26/2008.
Accession Number: 20080627–0011.
Comment Date: 5 p.m. Eastern Time on Thursday, July 17, 2008.

Docket Numbers: ER08–1168–000.
Applicants: Munnsville Wind Farm, LLC.
Description: Munnsville Wind Farm, LLC submits a Notice of Succession to inform the Commission that as a result of a corporate name change, Munnsville has succeeded the market-based rate tariff of Airtricity Munnsville Wind Farm, LLC.
Filed Date: 06/26/2008.
Accession Number: 20080630–0007.
Comment Date: 5 p.m. Eastern Time on Thursday, July 17, 2008.

Docket Numbers: ER08–1169–000.
Applicants: Midwest Independent Transmission System Operator, Inc.
Description: Midwest Independent Transmission System Operator Inc submits proposed revisions to their Open Access Transmission and Energy Markets Tariff.
Filed Date: 06/26/2008.
Accession Number: 20080630–0024.
Comment Date: 5 p.m. Eastern Time on Thursday, July 17, 2008.

Docket Numbers: ER08–1170–000.
Applicants: PJM Interconnection, LLC.
Description: PJM Interconnection, LLC submits revisions to Section 6A.2.1 of Schedule 1 of the Amended & Restated Operating Agreement, Second Revised Sheet 10A et al. to FERC Electric Tariff, Sixth Revised Volume 1, effective 8/26/08.
Filed Date: 06/27/2008.
Accession Number: 20080630–0006.
Comment Date: 5 p.m. Eastern Time on Friday, July 18, 2008.

Docket Numbers: ER08–1171–000.
Applicants: Southwestern Electric Power Company.
Description: American Electric Power Company submits notice of Cancellation of First Revised Rate Schedule 86, to be effective 6/31/08.
Filed Date: 06/27/2008.
Accession Number: 20080630–0005.
Comment Date: 5 p.m. Eastern Time on Friday, July 18, 2008.

Docket Numbers: ER08–1173–000.
Applicants: Energy West Resources, Inc.
Description: Energy West Resources, Inc submits a notice of cancellation of its FERC Electric Tariff Volume 1, effective 6/28/08.
Filed Date: 06/27/2008.
Accession Number: 20080701–0056.
Comment Date: 5 p.m. Eastern Time on Friday, July 18, 2008.

Docket Numbers: ER08–1175–000.
Applicants: Niagara Mohawk Power Corporation.
Description: Niagara Mohawk Power submits First Revised Service Agreement 339 to FERC Electric Tariff, Original Volume 1 with Carthage Energy LLC.
Filed Date: 06/27/2008.
Accession Number: 20080701–0057.
Comment Date: 5 p.m. Eastern Time on Friday, July 18, 2008.

Docket Numbers: ER08–1176–000.
Applicants: Wisconsin Electric Power Company.
Description: Wisconsin Electric Power Company submits their proposed revised Market Rate Tariff to remove the restrictions that currently exist on their market based rate authority.
Filed Date: 06/27/2008.
Accession Number: 20080701–0058.
Comment Date: 5 p.m. Eastern Time on Friday, July 18, 2008.

Docket Numbers: ER08–1177–000.
Applicants: Midwest Independent Transmission System Operator, Inc.
Description: Midwest Independent Transmission System Operator, Inc submits proposed revisions to the Coordination Agreement with Manitoba Hydro.
Filed Date: 06/27/2008.
Accession Number: 20080701–0059.
Comment Date: 5 p.m. Eastern Time on Friday, July 18, 2008.

Docket Numbers: ER08–1178–000.
Applicants: California Independent System Operator Corporation.
Description: California Independent System Operator Corporation submits an amendment to the CAISO's Market Redesign and Technology Tariff.
Filed Date: 06/27/2008.
Accession Number: 20080701–0060.
Comment Date: 5 p.m. Eastern Time on Friday, July 18, 2008.

Docket Numbers: ER08–1179–000.
Applicants: Southwest Power Pool, Inc.
Description: Southwest Power Pool Inc submits Revised Meter Agency Service Agreement.
Filed Date: 06/27/2008.
Accession Number: 20080701–0061.
Comment Date: 5 p.m. Eastern Time on Friday, July 18, 2008.

Docket Numbers: ER08–1180–000.
Applicants: IPP Energy LLC.
Description: IPP Energy LLC submits a Notice of Cancellation of Market-Based Rate Schedule FERC 1, effective 6/30/08.
Filed Date: 06/27/2008.

Accession Number: 20080701–0062.
Comment Date: 5 p.m. Eastern Time on Friday, July 18, 2008.

Docket Numbers: ER08–1181–000.
Applicants: Southwest Power Pool, Inc.
Description: Southwest Power Pool, Inc submits an executed Service Agreement for Network Integration Transmission Service between SPP as Transmission Provider and Kansas Electric Power Cooperative, Inc.
Filed Date: 06/27/2008.
Accession Number: 20080701–0063.
Comment Date: 5 p.m. Eastern Time on Friday, July 18, 2008.

Take notice that the Commission received the following open access transmission tariff filings:

Docket Numbers: OA07–35–001; OA08–68–001.
Applicants: Cleco Power LLC.
Description: Compliance Filing of Cleco Power LLC in Response to May 28, 2008 Order under Docket Nos. OA07–35, et al.
Filed Date: 06/27/2008.
Accession Number: 20080627–5127.
Comment Date: 5 p.m. Eastern Time on Friday, July 18, 2008.

Docket Numbers: OA07–50–002.
Applicants: Alcoa Power Generating Inc.—Yadkin.
Description: Alcoa Power Generating, Inc submits Second Revised Sheet 311 et al. to FERC Electric Tariff, First Revised Volume 3 to its Open Access Transmission Tariff pursuant to the Commission's 5/27/08 Order under OA07–50.
Filed Date: 06/26/2008.
Accession Number: 20080630–0004.
Comment Date: 5 p.m. Eastern Time on Thursday, July 17, 2008.

Docket Numbers: OA08–52–002.
Applicants: New York Independent System Operator, Inc.
Description: New York Independent System Operator, Inc submits Attachment Y changes to the 6/18/08 submittal etc. under OA08–52.
Filed Date: 06/27/2008.
Accession Number: 20080701–0054.
Comment Date: 5 p.m. Eastern Time on Friday, July 18, 2008.

Any person desiring to intervene or to protest in any of the above proceedings must file in accordance with Rules 211 and 214 of the Commission's Rules of Practice and Procedure (18 CFR 385.211 and 385.214) on or before 5 p.m. Eastern time on the specified comment date. It is not necessary to separately intervene again in a subdocket related to a compliance filing if you have previously intervened in the same docket. Protests will be considered by the Commission in determining the appropriate action to be taken, but will not serve to make protestants parties to the proceeding. Anyone filing a motion to intervene or protest must serve a copy of that document on the Applicant. In reference to filings initiating a new proceeding, interventions or protests submitted on or before the comment deadline need not be served on persons other than the Applicant.

The Commission encourages electronic submission of protests and interventions in lieu of paper, using the FERC Online links at *http://www.ferc.gov*. To facilitate electronic service, persons with Internet access who will eFile a document and/or be listed as a contact for an intervenor must create and validate an eRegistration account using the eRegistration link. Select the eFiling link to log on and submit the intervention or protests.

Persons unable to file electronically should submit an original and 14 copies of the intervention or protest to the Federal Energy Regulatory Commission, 888 First St. NE., Washington, DC 20426.

The filings in the above proceedings are accessible in the Commission's eLibrary system by clicking on the appropriate link in the above list. They are also available for review in the Commission's Public Reference Room in Washington, DC. There is an eSubscription link on the Web site that enables subscribers to receive e-mail notification when a document is added to a subscribed docket(s). For assistance with any FERC Online service, please e-mail *FERCOnlineSupport@ferc.gov* or call (866) 208–3676 (toll-free). For TTY, call (202) 502–8659.

Kimberly D. Bose,
Secretary.

[FR Doc. E8–16199 Filed 7–14–08; 8:45 am]

BILLING CODE 6717–01–P

DEPARTMENT OF ENERGY

Federal Energy Regulatory Commission

Combined Notice of Filings #1

July 2, 2008.

Take notice that the Commission received the following electric corporate filings:

Docket Numbers: EC08–105–000.
Applicants: Reliant Energy Mid-Atlantic Power Holdings, Reliant Energy New Jersey Holdings, LLC.
Description: Reliant Energy Mid-Atlantic Power Holdings, LLC et al. submits Application for Authorization under 203 of the Federal Power Act and Request for Waivers and Expedited Action.
Filed Date: 06/24/2008.
Accession Number: 20080626–0025.
Comment Date: 5 p.m. Eastern Time on Tuesday, July 15, 2008.

Take notice that the Commission received the following exempt wholesale generator filings:

Docket Numbers: EG08–76–000.
Applicants: Windthorst–1, LLC.
Description: Notice of Self Certification of Exempt Wholesale Generator Status of Windthorst–1, LLC.
Filed Date: 06/26/2008.
Accession Number: 20080626–5050.
Comment Date: 5 p.m. Eastern Time on Thursday, July 17, 2008.

Take notice that the Commission received the following electric rate filings:

Docket Numbers: ER94–1478–019.
Applicants: Electrade Corporation.
Description: Electrade Corp. submits an updated market power analysis and rate schedule revisions pursuant to Order 697 and 697–A.
Filed Date: 06/27/2008.
Accession Number: 20080701–0026.
Comment Date: 5 p.m. Eastern Time on Friday, July 18, 2008.

Docket Numbers: ER96–1551–020; ER01–615–016; ER07–965–002.
Applicants: Public Service Company of New Mexico; EnergyCo Marketing and Trading, LLC.
Description: Public Service Company of New Mexico and EnergyCo Marketing and Trading, LLC submits Substitute Original Sheet 6 et al. to the Revised Market-Based Rate Tariffs submitted 6/5/08.
Filed Date: 06/25/2008.
Accession Number: 20080626–0023.
Comment Date: 5 p.m. Eastern Time on Wednesday, July 16, 2008.

Docket Numbers: ER96–1947–022; ER07–1001–001; ER07–1100–001; ER02–1052–008.
Applicants: LS Power Marketing, LLC; Sugar Creek Power Company, LLC; Entergy Services, Inc.; West Georgia Generating Company, LLC.
Description: LS Power Development LLC et al. amends the May 2008 Filing and submits Substitute Fifth Revised Sheet 1 et al. to FERC Electric Tariff, First Revised Volume 1 in Compliance with Order 697.
Filed Date: 06/26/2008.
Accession Number: 20080701–0019.
Comment Date: 5 p.m. Eastern Time on Thursday, July 17, 2008.

Docket Numbers: ER97–851–017.
Applicants: Hydro-Quebec Energy Services (U.S.) Inc.
Description: HQ Energy Services (US) Inc. submits an updated market power

analysis and conforming market-based rate tariff.

Filed Date: 06/26/2008.

Accession Number: 20080630–0016.

Comment Date: 5 p.m. Eastern Time on Thursday, July 17, 2008.

Docket Numbers: ER98–830–019; ER03–719–010.

Applicants: Millennium Power Partners, LP; New Athens Generating Company, LLC.

Description: New Athens Generating Co., LLC and Millennium Power Partners, LP submits their updated market power analyses triennial report in accordance with Order 697 etc.

Filed Date: 06/27/2008.

Accession Number: 20080701–0066.

Comment Date: 5 p.m. Eastern Time on Friday, July 18, 2008.

Docket Numbers: ER99–1757–015; EL05–67–003.

Applicants: Empire District Electric Company, The.

Description: The Empire District Electric Company submits its Refund Report.

Filed Date: 06/26/2008.

Accession Number: 20080626–5058.

Comment Date: 5 p.m. Eastern Time on Thursday, July 17, 2008.

Docket Numbers: ER99–3168–008; ER04–994–004; ER04–659–009; ER04–657–009; ER04–660–009.

Applicants: Astoria Generating Company, LP; Boston Generating, LLC; Fore River Development, LLC; Mystic I, LLC; Mystic Development, LLC.

Description: Astoria Generating Co., LP et al. submits an updated market power analysis and Order 697 and 697–A compliance filing.

Filed Date: 06/24/2008.

Accession Number: 20080626–0051.

Comment Date: 5 p.m. Eastern Time on Tuesday, July 15, 2008.

Docket Numbers: ER99–4102–007.

Applicants: Milford Power Co., LLC.

Description: Milford Power Company submits revised market-based tariff sheets reflecting the new tariff requirements established in Order 697 and 697–A.

Filed Date: 06/27/2008.

Accession Number: 20080701–0021.

Comment Date: 5 p.m. Eastern Time on Friday, July 18, 2008.

Docket Numbers: ER03–447–005.

Applicants: Black Oak Energy, LLC.

Description: Black Oak Energy, LLC submits its Order 697 Compliance Filing and application for Category 1 Status.

Filed Date: 06/25/2008.

Accession Number: 20080630–0010.

Comment Date: 5 p.m. Eastern Time on Wednesday, July 16, 2008.

Docket Numbers: ER03–770–004.

Applicants: AIG Energy Inc.

Description: AIG Energy, Inc submits their request for Category 1 Seller classification in accordance with the criteria set forth in Section 35.36(a)(2) of FERC's regulations.

Filed Date: 06/26/2008.

Accession Number: 20080630–0001.

Comment Date: 5 p.m. Eastern Time on Thursday, July 17, 2008.

Docket Numbers: ER03–774–008.

Applicants: Eagle Energy Partners I, L.P.

Description: Eagle Energy Partners I, LP submits Notice of Non-Material Change in Status to inform the Commission of a non-material change from the characteristics upon which the Commission relied in granting Eagle market-based rate etc.

Filed Date: 06/25/2008.

Accession Number: 20080626–0078.

Comment Date: 5 p.m. Eastern Time on Wednesday, July 16, 2008.

Docket Numbers: ER04–31–002; ER07–808–001; ER06–1233–001; ER06–1230–001; ER06–1231–001; ER06–1232–002.

Applicants: Epic Merchant Energy, L.P.; Epic Merchant Energy CA, LLC; EPIC Merchant Energy Midwest, L.P.; EPIC Merchant Energy NY, L.P.; EPIC NJ PA, L.P.

Description: EPIC Merchant Energy, LP et al. submits an application for determination of Category 1 Status.

Filed Date: 06/25/2008.

Accession Number: 20080626–0068.

Comment Date: 5 p.m. Eastern Time on Wednesday, July 16, 2008.

Docket Numbers: ER04–170–007.

Applicants: MxEnergy Electric Inc.

Description: MXenergy Electric Inc submits the regional schedule set in Appendix D–2 of Order 697–A, request for Category 1 Seller classification in accordance with criteria set forth in section 35.36(a)(2) of the Commission's regulations.

Filed Date: 06/24/2008.

Accession Number: 20080626–0030.

Comment Date: 5 p.m. Eastern Time on Tuesday, July 15, 2008.

Docket Numbers: ER04–222–006.

Applicants: CPV Milford, LLC.

Description: CPV Milford, LLC submits a market power update in compliance with FERC's Order 697.

Filed Date: 06/27/2008.

Accession Number: 20080701–0027.

Comment Date: 5 p.m. Eastern Time on Friday, July 18, 2008.

Docket Numbers: ER04–381–002; ER06–914–002; ER06–912–002; ER06–913–002; ER05–1467–001; ER08–632–002; ER08–731–001.

Applicants: DC Energy, LLC; DC Energy New England, LLC; DC Energy New York, LLC; DC Energy Mid-Atlantic, LLC; DC Energy Midwest, LLC; DC Energy Texas, LLC; DC Energy California, LLC.

Description: DCE Entitles submits compliance filing, an update market power analysis, and request for determination of Category 1 Seller status.

Filed Date: 06/24/2008.

Accession Number: 20080626–0031.

Comment Date: 5 p.m. Eastern Time on Tuesday, July 15, 2008.

Docket Numbers: ER05–235–003.

Applicants: El Paso Marketing, L.P.

Description: Petition requesting classification as category 1 seller pursuant to order 697 and market-based rate compliance filings re El Paso Marketing, LP.

Filed Date: 06/25/2008.

Accession Number: 20080626–0067.

Comment Date: 5 p.m. Eastern Time on Wednesday, July 16, 2008.

Docket Numbers: ER05–287–004.

Applicants: Granite Ridge Energy, LLC.

Description: Granite Ridge Energy, LLC submits its updated market power analysis (Triennial Report).

Filed Date: 06/27/2008.

Accession Number: 20080701–0068.

Comment Date: 5 p.m. Eastern Time on Friday, July 18, 2008.

Docket Numbers: ER05–330–002.

Applicants: City Power Marketing LLC.

Description: City Power Marketing, LLC request for determination by the Commission that it qualifies as a Category 1 Seller pursuant to Section 205 of the FPA etc.

Filed Date: 06/26/2008.

Accession Number: 20080630–0014.

Comment Date: 5 p.m. Eastern Time on Thursday, July 17, 2008.

Docket Numbers: ER05–493–002; ER05–494–002; ER05–495–002; ER08–901–002.

Applicants: Saracen Energy LP; Saracen Energy Power Advisors LP; Saracen Merchant Energy LP; Saracen Energy Partners, LP.

Description: Saracen Energy, LP et al. submits an updated market power analysis and rate schedule revisions.

Filed Date: 06/25/2008.

Accession Number: 20080626–0066.

Comment Date: 5 p.m. Eastern Time on Wednesday, July 16, 2008.

Docket Numbers: ER05–1218–003; ER05–1219–003; ER96–149–013; ER97–2414–012; ER00–2887–006; ER06–703–002; ER07–1341–003.

Applicants: Bayonne Plant Holding, L.L.C.; Camden Plant Holding, L.L.C.; Dartmouth Power Associates Limited Partn; Lowell Cogeneration Company

Limited Part; Newark Bay Cogeneration Partnership, L.P; Pedricktown Cogeneration Company, LP; York Generation Company LLC.

Description: Bayonne Plant Holding, LLC et al. submits an updated market power analysis in compliance with FERC's Order 697–A.

Filed Date: 06/26/2008.

Accession Number: 20080630–0008.

Comment Date: 5 p.m. Eastern Time on Thursday, July 17, 2008.

Docket Numbers: ER05–1262–016; ER06–1093–012.

Applicants: Flat Rock Windpower LLC; Flat Rock Windpower II LLC.

Description: Flat Rock Windpower, LLC submits an updated market power anlysis in compliance with the requirements of Section 35.37 of the regulations of FERC's Order 697–A.

Filed Date: 06/26/2008.

Accession Number: 20080630–0002.

Comment Date: 5 p.m. Eastern Time on Thursday, July 17, 2008.

Docket Numbers: ER06–386–002; ER02–1632–004; ER03–1088–003; ER05–1280–003.

Applicants: Direct Energy Services, LLC; Energy America LLC; Direct Energy Marketing Inc.; Strategic Energy LLC.

Description: Application for determination of category 1 status, providing revised market-based rate tariff sheets and reporting change in facts relating to market-based rate authority re Direct Energy Services, LLC et al.

Filed Date: 06/24/2008.

Accession Number: 20080626–0032.

Comment Date: 5 p.m. Eastern Time on Tuesday, July 15, 2008.

Docket Numbers: ER06–713–002.

Applicants: Weyerhaeuser Company.

Description: Weyerhaeuser Company submits their triennial market power update and amendments to their market-based rate tariff.

Filed Date: 06/27/2008.

Accession Number: 20080701–0028.

Comment Date: 5 p.m. Eastern Time on Friday, July 18, 2008.

Docket Numbers: ER06–1220–001.

Applicants: USEG, LLP.

Description: USEG, LLP submits an updated market power analysis and rate schedule revisions.

Filed Date: 06/25/2008.

Accession Number: 20080626–0038.

Comment Date: 5 p.m. Eastern Time on Wednesday, July 16, 2008.

Docket Numbers: ER06–1364–001.

Applicants: International Paper Company.

Description: International Paper Co submits the triennial market power update and amendments to its market-based rate tariff.

Filed Date: 06/27/2008.

Accession Number: 20080701–0029.

Comment Date: 5 p.m. Eastern Time on Friday, July 18, 2008.

Docket Numbers: ER07–501–009; ER08–649–004; ER06–739–013; ER06–738–013; ER03–983–011; ER07–758–007; ER02–537–015.

Applicants: Birchwood Power Partners, L.P.; EFS Parlin Holdings, LLC; East Coast Power Linden Holding, LLC; Cogen Technologies Linden Venture, L.P.; Fox Energy Company LLC; Inland Empire Energy Center, L.L.C.; Shady Hills Power Company, L.L.C.

Description: GE Energy Financial Services Inc submits Notice of Change in Status.

Filed Date: 06/27/2008.

Accession Number: 20080627–5078.

Comment Date: 5 p.m. Eastern Time on Friday, July 18, 2008.

Docket Numbers: ER07–522–003; ER06–1122–003.

Applicants: Old Trail Wind Farm, LLC; High Trail Wind Farm, LLC.

Description: Old Trail Wind Farm, LLC and High Trail Wind Farm, LLC submits their updated market power analysis in compliance with Order 697–A.

Filed Date: 06/26/2008.

Accession Number: 20080630–0009.

Comment Date: 5 p.m. Eastern Time on Thursday, July 17, 2008.

Docket Numbers: ER07–769–001.

Applicants: Cedar Rapids Transmission Company, Ltd.

Description: Cedar Rapids Transmission Co, Ltd submits an updated market power analysis and revised market-based rate tariff.

Filed Date: 06/27/2008.

Accession Number: 20080701–0051.

Comment Date: 5 p.m. Eastern Time on Friday, July 18, 2008.

Docket Numbers: ER07–892–001.

Applicants: Louis Dreyfus Energy Services L.P.

Description: Louis Dreyfus Energy Services, LP submits an update market power analysis and tariff revisions.

Filed Date: 06/25/2008.

Accession Number: 20080626–0063.

Comment Date: 5 p.m. Eastern Time on Wednesday, July 16, 2008.

Docket Numbers: ER07–907–001.

Applicants: Bruce Power Inc.

Description: Bruce Power Inc submits an updated market analysis in compliance with requirements of sections 35.37 of the regulations of the FERC etc.

Filed Date: 06/27/2008.

Accession Number: 20080701–0024.

Comment Date: 5 p.m. Eastern Time on Friday, July 18, 2008.

Docket Numbers: ER07–936–001; ER07–958–001.

Applicants: Rumford Power Inc., Tiverton Power Inc.; Rumford Power Inc.

Description: Rumford Power, Inc et al. submits an updated market power analysis and Appendix B list of generation and transmission assets.

Filed Date: 06/27/2008.

Accession Number: 20080701–0025.

Comment Date: 5 p.m. Eastern Time on Friday, July 18, 2008.

Docket Numbers: ER08–92–005.

Applicants: Virginia Electric and Power Company.

Description: Virginia Electric and Power Co submits Substitute Original Sheet 314F.14, FERC Electric Tariff, Sixth Revised Volume 1.

Filed Date: 06/26/2008.

Accession Number: 20080627–0008.

Comment Date: 5 p.m. Eastern Time on Thursday, July 17, 2008.

Docket Numbers: ER08–394–003.

Applicants: Midwest Independent Transmission System Operator, Inc.

Description: Midwest Independent Transmission System Operator, Inc submits its Open Access Transmission and Energy Markets Tariff to include RAR financial settlement provisions, in compliance with Commission's directives.

Filed Date: 06/25/2008.

Accession Number: 20080626–0062.

Comment Date: 5 p.m. Eastern Time on Wednesday, July 16, 2008.

Any person desiring to intervene or to protest in any of the above proceedings must file in accordance with Rules 211 and 214 of the Commission's Rules of Practice and Procedure (18 CFR 385.211 and 385.214) on or before 5 p.m. Eastern time on the specified comment date. It is not necessary to separately intervene again in a subdocket related to a compliance filing if you have previously intervened in the same docket. Protests will be considered by the Commission in determining the appropriate action to be taken, but will not serve to make protestants parties to the proceeding. Anyone filing a motion to intervene or protest must serve a copy of that document on the Applicant. In reference to filings initiating a new proceeding, interventions or protests submitted on or before the comment deadline need not be served on persons other than the Applicant.

The Commission encourages electronic submission of protests and interventions in lieu of paper, using the FERC Online links at *http://www.ferc.gov.* To facilitate electronic service, persons with Internet access who will eFile a document and/or be

listed as a contact for an intervenor must create and validate an eRegistration account using the eRegistration link. Select the eFiling link to log on and submit the intervention or protests.

Persons unable to file electronically should submit an original and 14 copies of the intervention or protest to the Federal Energy Regulatory Commission, 888 First St., NE., Washington, DC 20426.

The filings in the above proceedings are accessible in the Commission's eLibrary system by clicking on the appropriate link in the above list. They are also available for review in the Commission's Public Reference Room in Washington, DC. There is an eSubscription link on the Web site that enables subscribers to receive e-mail notification when a document is added to a subscribed dockets(s). For assistance with any FERC Online service, please e-mail *FERCOnlineSupport@ferc.gov.* or call (866) 208–3676 (toll free). For TTY, call (202) 502–8659.

Kimberly D. Bose,

Secretary.

[FR Doc. E8–16200 Filed 7–14–08; 8:45 am]

BILLING CODE 6717–01–P

DEPARTMENT OF ENERGY

Federal Energy Regulatory Commission

[Project No. 1417–198]

Central Nebraska Public Power and Irrigation District; Notice of Availability of Environmental Assessment

July 8, 2008.

In accordance with the National Environmental Policy Act of 1969 and the Federal Energy Regulatory Commission's regulations, 18 CFR Part 380 (Order No. 486, 52 FR 47879) the Office of Energy Projects has prepared an environmental assessment (EA) for an application filed by Central Nebraska Public Power and Irrigation District (licensee) on February 12, 2007, requesting Commission approval to amend the Land and Shoreline Management Plan (LSMP) for the Kingsley Dam Hydroelectric Project (FERC No. 1417). The licensee proposes to reclassify certain shoreline lands at Plum Creek reservoir (reservoir) from open-space to residential in order to allow adjacent landowners to apply for shoreline access facilities. The reservoir is located within the Platte River Basin in Dawson and Gosper Counties, near the towns of Lexington and Elwood, Nebraska. The project does not occupy any federal lands. The EA evaluates the environmental impacts that would result from approving the licensee's proposal. The EA finds that approval of the application would not constitute a major federal action significantly affecting the quality of the human environment.

A copy of the EA is on file with the Commission and is available for public inspection. The EA may also be viewed on the Commission's Web site at *http://www.ferc.gov* using the ''eLibrary'' link. Enter the docket number (P–1417) excluding the last three digits in the docket number field to access the document. For assistance, contact FERC Online Support at *FERCOnlineSupport@ferc.gov* or toll-free at 1–866–208–3676, or for TTY, (202) 502–8659.

You also may register online at *http://www.ferc.gov/docs-filing/esubscription.asp* to be notified via e-mail of new filings and issuances related to this or other pending projects. For assistance, contact FERC Online Support.

For further information, please contact Christopher Yeakel by telephone at (202) 502–8132 or by e-mail at *Christopher.yeakel@ferc.gov.*

Kimberly D. Bose,

Secretary.

[FR Doc. E8–16048 Filed 7–14–08; 8:45 am]

BILLING CODE 6717–01–P

DEPARTMENT OF ENERGY

Federal Energy Regulatory Commission

[Docket No. PH08–28–000]

Starwood Energy Group Global, L.L.C.; Notice of Filing

July 8, 2008.

Take notice that on May 23, 2008, Starwood Energy Group Global, L.L.C., on behalf of itself and its subsidiary holding companies, filed an application, FERC–65B Waiver Notification, requesting waiver of the accounting, record retention and reporting requirements of sections 366.21, 366.22 and 366.23 of the Commission's regulations, 18 CFR sections 366.21–366.23.

Any person desiring to intervene or to protest this filing must file in accordance with Rules 211 and 214 of the Commission's Rules of Practice and Procedure (18 CFR 385.211, 385.214). Protests will be considered by the Commission in determining the appropriate action to be taken, but will not serve to make protestants parties to the proceeding. Any person wishing to become a party must file a notice of intervention or motion to intervene, as appropriate. Such notices, motions, or protests must be filed on or before the comment date. On or before the comment date, it is not necessary to serve motions to intervene or protests on persons other than the Applicant.

The Commission encourages electronic submission of protests and interventions in lieu of paper using the ''eFiling'' link at *http://www.ferc.gov.* Persons unable to file electronically should submit an original and 14 copies of the protest or intervention to the Federal Energy Regulatory Commission, 888 First Street, NE., Washington, DC 20426.

This filing is accessible on-line at *http://www.ferc.gov,* using the ''eLibrary'' link and is available for review in the Commission's Public Reference Room in Washington, DC. There is an ''eSubscription'' link on the Web site that enables subscribers to receive e-mail notification when a document is added to a subscribed docket(s). For assistance with any FERC Online service, please e-mail *FERCOnlineSupport@ferc.gov,* or call (866) 208–3676 (toll free). For TTY, call (202) 502–8659.

Comment Date: 5 p.m. Eastern Time on July 17, 2008.

Kimberly D. Bose,

Secretary.

[FR Doc. E8–16046 Filed 7–14–08; 8:45 am]

BILLING CODE 6717–01–P

DEPARTMENT OF ENERGY

Federal Energy Regulatory Commission

[Docket No. EL08–71–000]

TexMex Energy, LLC; Notice of Filing

July 8, 2008.

Take notice that on June 19, 2008, TexMex Energy, LLC filed a Petition for Declaratory Order resolving jurisdictional uncertainty regarding the operation and use of the ''Eagle Pass DC Tie'' between the Electric Reliability Council of Texas Region and the grid controlled by the Comision Federal de Electricidad.

Any person desiring to intervene or to protest this filing must file in accordance with Rules 211 and 214 of the Commission's Rules of Practice and Procedure (18 CFR 385.211, 385.214). Protests will be considered by the Commission in determining the appropriate action to be taken, but will

not serve to make protestants parties to the proceeding. Any person wishing to become a party must file a notice of intervention or motion to intervene, as appropriate. Such notices, motions, or protests must be filed on or before the comment date. On or before the comment date, it is not necessary to serve motions to intervene or protests on persons other than the Applicant.

The Commission encourages electronic submission of protests and interventions in lieu of paper using the ''eFiling'' link at *http://www.ferc.gov.* Persons unable to file electronically should submit an original and 14 copies of the protest or intervention to the Federal Energy Regulatory Commission, 888 First Street, NE., Washington, DC 20426.

This filing is accessible on-line at *http://www.ferc.gov,* using the ''eLibrary'' link and is available for review in the Commission's Public Reference Room in Washington, DC. There is an ''eSubscription'' link on the Web site that enables subscribers to receive e-mail notification when a document is added to a subscribed docket(s). For assistance with any FERC Online service, please e-mail *FERCOnlineSupport@ferc.gov,* or call (866) 208–3676 (toll free). For TTY, call (202) 502–8659.

Comment Date: 5 p.m. Eastern Time on July 15, 2008.

Kimberly D. Bose,

Secretary.

[FR Doc. E8–16050 Filed 7–14–08; 8:45 am]

BILLING CODE 6717–01–P

ENVIRONMENTAL PROTECTION AGENCY

[EPA–HQ–OW–2006–0771, FRL–8692–2]

Agency Information Collection Activities; Submission to OMB for Review and Approval; Comment Request; Coalbed Methane Extraction Sector Survey (New), EPA ICR Number 2291.01, OMB Control No. 2040–NEW

AGENCY: Environmental Protection Agency (EPA).

ACTION: Notice.

SUMMARY: In compliance with the Paperwork Reduction Act (PRA) (44 U.S.C. 3501 *et seq.*), this document announces that an Information Collection Request (ICR) has been forwarded to the Office of Management and Budget (OMB) for review and approval. This is a request for a new collection. The ICR, which is abstracted below, describes the nature of the information collection and its estimated burden and cost.

DATES: Additional comments may be submitted on or before August 14, 2008.

ADDRESSES: Submit your comments, referencing Docket ID No. EPA–HQ–OW–2006–0771 to (1) EPA online using *http://www.regulations.gov* (our preferred method), by e-mail to *OW–Docket@epa.gov,* or by mail to: EPA Docket Center, Environmental Protection Agency, Water Docket, Mail Code 28221T, 1200 Pennsylvania Ave., NW., Washington, DC 20460, and (2) OMB by mail to: Office of Information and Regulatory Affairs, Office of Management and Budget (OMB), Attention: Desk Officer for EPA, 725 17th Street, NW., Washington, DC 20503.

FOR FURTHER INFORMATION CONTACT: Mr. Carey A. Johnston, Office of Science and Technology, Mail Code 4303T, Environmental Protection Agency, 1200 Pennsylvania Ave., NW., Washington, DC 20460; telephone number: (202) 566–1014; fax number: (202) 566–1053; e-mail address: *johnston.carey@epa.gov.*

SUPPLEMENTARY INFORMATION: EPA has submitted the following ICR to OMB for review and approval according to the procedures prescribed in 5 CFR 1320.12. On January 25, 2008 (73 FR 4556), EPA sought comments on this ICR pursuant to 5 CFR 1320.8(d). EPA received comments during the comment period from 35 individuals or organizations including industry representatives; Federal, State, and Tribal representatives; public interest groups and landowners; and water treatment experts. These comments are summarized in this notice and addressed in the supporting statement for this ICR (*see* DCN 05763). Any additional comments on this ICR should be submitted to EPA and OMB within 30 days of this notice.

EPA has established a public docket for this ICR under Docket ID No. EPA–HQ–OW–2006–0771, which is available for online viewing at *http://www.regulations.gov,* or in person viewing at the Water Docket in the EPA Docket Center (EPA/DC), EPA West, Room 3334, 1301 Constitution Ave., NW., Washington, DC. The EPA/DC Public Reading Room is open from 8:30 a.m. to 4:30 p.m., Monday through Friday, excluding legal holidays. The telephone number for the Reading Room is 202–566–1744, and the telephone number for the Water Docket is 202–566–2426.

Use EPA's electronic docket and comment system at *http://www.regulations.gov,* to submit or view public comments, access the index listing of the contents of the docket, and to access those documents in the docket that are available electronically. Once in the system, select ''docket search,'' then key in the docket ID number identified above. Please note that EPA's policy is that public comments, whether submitted electronically or in paper, will be made available for public viewing at *http://www.regulations.gov* as EPA receives them and without change, unless the comment contains copyrighted material, Confidential Business Information (CBI), or other information whose public disclosure is restricted by statute. For further information about the electronic docket, go to *http://www.regulations.gov.*

Title: Coalbed Methane Extraction Sector Questionnaire (New).

ICR numbers: EPA ICR No. 2291.01, OMB Control No. 2040–NEW.

ICR Status: This ICR is for a new information collection activity. An Agency may not conduct or sponsor, and a person is not required to respond to, a collection of information, unless it displays a currently valid OMB control number. The OMB control numbers for EPA's regulations in title 40 of the CFR are displayed either by publication in the **Federal Register** or by other appropriate means, such as on the related collection instrument or form, if applicable. The display of OMB control numbers in certain EPA regulations is consolidated in 40 CFR part 9.

Abstract: The Clean Water Act (CWA) directs EPA to develop regulations, called effluent guidelines, to limit the amount of pollutants that are discharged to surface waters or to sewage treatment plants. Coalbed methane (CBM) extraction activities accounted for about 9.4 percent of the total U.S. natural gas production in 2006 and are expanding in multiple basins across the United States. EPA's effluent guidelines do not currently regulate pollutant discharges from CBM extraction operations.

CBM extraction requires removal of large amounts of water from underground coal seams before CBM can be released. CBM wells have a distinctive production cycle characterized by an early stage when large amounts of water are produced to reduce reservoir pressure which in turn encourages release of gas; a stable stage when quantities of produced gas increase as the quantities of produced water decrease; and a late stage when the amount of gas produced declines and water production remains low. Pollutants often found in these wastewaters include chloride, sodium, sulfate, bicarbonate, fluoride, iron, barium, magnesium, ammonia, and arsenic.

EPA identified the CBM sector as a candidate for a detailed study in the final 2006 Effluent Guidelines Program Plan (71 *FR* 76656; December 21, 2006) and also identified that it would develop an industry questionnaire to support this detailed study and would seek OMB approval under the Paperwork Reduction Act (PRA). EPA is conducting this review to determine if it would be appropriate to conduct a rulemaking to revise the effluent guidelines for the Oil and Gas Extraction Point Source Category (40 CFR part 435) to control pollutants discharged in CBM produced water. EPA again announced it will conduct an ICR in the preliminary 2008 Plan (72 *FR* 61343; October 30, 2007) and sought comments on this ICR pursuant to 5 CFR 1320.8(d) (73 *FR* 4556; January 25, 2008). For each industrial sector, EPA's planning process considers four factors: pollutants discharged, current and potential pollution prevention and control technology options, growth and economic affordability, and implementation and efficiency considerations of revising existing effluent guidelines or publishing new effluent guidelines. EPA will use this ICR to collect technical and economic information from a wide range of CBM operations to address these factors. EPA plans to collect information on geographical and geologic differences in the characteristics of CBM produced waters, environmental data, current regulatory controls, and availability and affordability of treatment technology options. See final 2006 Plan (71 *FR* 76666). Response to the questionnaire will be mandatory for recipients. EPA will administer the questionnaire using its authority under Section 308 of the CWA, 33 U.S.C. 1318.

EPA received 35 public comments from industry, landowners, public interest groups, water treatment experts, and Federal agencies in response to its notice on January 25, 2008 (73 *FR* 4556). Industry commenters noted that CBM well circumstances (e.g., produced water quantity and quality, available and applicable produced waste management and control technologies, etc.) are diverse and complex geographically and geologically, and that the initial questionnaire did not address this complexity and variation. These commenters also expressed concerns about the survey burden and about how the Agency would use the data. Several industry comments also indicated that there is a general lack of availability and documentation of common technologies that can be used for CBM produced water. Finally, industry representatives asserted that EPA does not need detailed financial data and technical information requested in the draft questionnaire to determine whether regulations should be developed. Federal agencies requested that EPA develop different groupings for survey respondents to ensure that the survey adequately captures the heterogeneity of different CBM produced waters and industry practices. They also suggested additional questions to the survey to better inform EPA's decision-making (e.g., specifically collect data to assess the amount of open water in acres that could attract migratory aquatic birds). Public interest groups indicated that produced water discharges from CBM production have had both quality and quantity impacts on surface water. They also requested that EPA include questions in the survey to assess the costs to communities of not limiting these discharges. EPA has a summary of the ICR modifications and comment responses in the supporting statement to address these comments (*see* DCN 05763).

Burden Statement: The annual public reporting and recordkeeping burden for this collection of information is estimated to average 5 hours for the screener survey response and approximately 80 hours for the detailed survey response. Burden means the total time, effort, or financial resources expended by persons to generate, maintain, retain, or disclose or provide information to or for a Federal agency. This includes the time needed to review instructions; develop, acquire, install, and utilize technology and systems for the purposes of collecting, validating, and verifying information, processing and maintaining information, and disclosing and providing information; adjust the existing ways to comply with any previously applicable instructions and requirements which have subsequently changed; train personnel to be able to respond to a collection of information; search data sources; complete and review the collection of information; and transmit or otherwise disclose the information.

Respondents/Affected Entities: Companies operating wells that produce coalbed methane.

Estimated Number of Respondents: 484.

Frequency of Response: Once For Screener Survey, Once for Respondents Selected for Detailed Survey.

Estimated Total Annual Hour Burden: 40,017.

Estimated Total Annual Cost: $2,140,796, includes $28,415 annualized capital and O&M costs.

Changes in the Estimates: There is an increase of 40,017 hours in the total estimated burden currently identified in the OMB Inventory of Approved ICR Burdens. This increase is due to the fact that this is a new ICR which identifies this industry for a detailed study for EPA's effluent guidelines planning program.

Dated: July 9, 2008.

Sara Hisel-McCoy,

Director, Collection Strategies Division.

[FR Doc. E8–16117 Filed 7–14–08; 8:45 am]

BILLING CODE 6560–50–P

ENVIRONMENTAL PROTECTION AGENCY

[FRL–8692–3]

Science Advisory Board Staff Office; Notification of Upcoming Meeting of the Science Advisory Board Particulate Matter Research Centers Program Advisory Panel

AGENCY: Environmental Protection Agency (EPA).

ACTION: Notice.

SUMMARY: The Environmental Protection Agency (EPA or Agency) Science Advisory Board (SAB) Staff Office announces a public meeting of the SAB Particulate Matter (PM) Research Centers Program Advisory Panel to comment on the Agency's current PM research centers program and provide advice to EPA concerning future structures and strategic direction for the program.

DATES: The meeting dates are Wednesday, October 1, 2008, from 8:30 a.m. to 5:30 p.m. through Thursday, October 2, 2008, from 8:30 a.m. to 3 p.m. (Eastern Time).

ADDRESSES: The meeting will be held in the SAB Conference Center located at: 1025 F Street, NW., Room 3705, Washington, DC 20004.

FOR FURTHER INFORMATION CONTACT: Members of the public who wish to obtain further information about this meeting must contact Mr. Fred Butterfield, Designated Federal Officer (DFO). Mr. Butterfield may be contacted at the EPA Science Advisory Board (1400F), U.S. Environmental Protection Agency, 1200 Pennsylvania Avenue, NW., Washington, DC 20460; or via telephone/voice mail: 202–343–9994; fax 202–233–0643; or e-mail at *butterfield.fred@epa.gov.* General information about the EPA SAB, as well as any updates concerning the meeting announced in this notice, may be found on the SAB Web site at *http://www.epa.gov/sab.*

SUPPLEMENTARY INFORMATION: The SAB was established by 42 U.S.C. 4365 to provide independent scientific and technical advice to the Administrator on the technical basis for Agency positions and regulations. The SAB is a Federal Advisory Committee chartered under the Federal Advisory Committee Act (FACA), as amended, 5 U.S.C., App. This SAB Panel will comply with the provisions of FACA and all appropriate SAB Staff Office procedural policies.

Background: In 1998, the Congress directed EPA to establish as many as five university-based PM research centers as part of the Agency's expanded Office of Research and Development (ORD) PM research program. The first PM Research Centers were funded from 1999 to 2005 with a total program budget of $8 million annually (see: *http://es.epa.gov/ncer/science/pm/centers.html).* In the original Request for Applications (RFA), prospective centers were asked to propose an integrated research program on the health effects of PM, including exposure, dosimetry, toxicology and epidemiology. ORD's PM Research Centers program was initially shaped by recommendations from the National Research Council.

In 2002, ORD requested that the Science Advisory Board conduct an interim review of EPA's PM Research Centers program, the report from which is found at *http://yosemite.epa.gov/sab/sabproduct.nsf/6374FD2B32EFE730852570CA007415FE/$File/ec02008.pdf.* This review was instrumental in providing additional guidance to ORD for the second phase of the program (2005–2010). In 2004, ORD held a second competition for the PM Research Centers program. This RFA asked respondents to address the central theme of ''linking health effects to PM sources and components,'' and to focus on the research priorities of susceptibility, biological mechanisms, exposure-response relationships, and source linkages. From this RFA, five current centers are funded for 2005–2010 with the total program budget at $40 million (see: *http://cfpub.epa.gov/ncer_abstracts/index.cfm/fuseaction/outlinks.centers/centerGroup/19*).

EPA's National Center for Environmental Research (NCER), within ORD, requested that the SAB Staff Office form an expert panel to comment on the Agency's current PM Research Centers program and to advise EPA concerning the possible structures and strategic direction for the program as ORD considers funding a third round of air pollution research centers into the future, *i.e.*, from 2010 to 2015. Therefore, in response to this request from NCER, the SAB Staff Office published a notice in the **Federal Register** (73 FR 5838) on January 31, 2008, which announced the formation of an SAB *ad hoc* panel for this advisory activity and requested public nominations of qualified experts to serve on this panel.

The SAB Staff Office has established the SAB PM Research Centers Program Advisory Panel. This *ad hoc* Panel is comprised of nationally- and internationally-recognized, non-EPA scientists with extensive research program management expertise and experience related to airborne pollution (including PM) and the application of research results in reducing air pollution in protection of human health and the environment. Furthermore, these experts have had direct research experience related to airborne particulate matter. The roster and biosketches of this SAB Panel are posted on the SAB Web site at *http://www.epa.gov/sab.*

Technical Contacts: Any programmatic or technical questions concerning EPA's Airborne Particulate Matter Research Centers Program can be directed to Ms. Stacey Katz, NCER, at phone: 202–343–9855, or e-mail: *katz.stacey@epa.gov;* Ms. Gail Robarge, NCER, at phone: 202–343–9857, or e-mail: *robarge.gail@epa.gov;* or to Mr. Dan Costa, ORD's National Program Director for Air Research, at phone: 919–541–2532, or e-mail: *costa.dan@epa.gov.*

Availability of Meeting Materials: All Agency documents to be discussed during this advisory activity will be available on EPA's ''Airborne Particulate Matter Research Centers—New (2005)'' Web page at: *http://cfpub.epa.gov/ncer_abstracts/index.cfm/fuseaction/outlinks.centers/centerGroup/19.*

The SAB meeting agenda and any other materials for this upcoming public advisory meeting will be available on the EPA Web site at *http://www.epa.gov/casac* in advance of the meeting.

Procedures for Providing Public Input: Interested members of the public may submit relevant written or oral information for the SAB Panel to consider on the topics included in this advisory activity and/or group conducting the activity. *Oral Statements:* In general, individuals or groups requesting an oral presentation at a public meeting will be limited to five minutes per speaker, with no more than a total of one hour for all speakers. Interested parties should contact Mr. Butterfield, DFO, in writing (preferably via e-mail) at the contact information noted above, by September 24, 2008, to be placed on a list of public speakers for the meeting. *Written Statements:* Written statements should be received in the SAB Staff Office by September 24, 2008, so that the information may be made available to the SAB Panel members for their consideration. Written statements should be supplied to the DFO electronically via e-mail (acceptable file formats: Adobe PDF, MS Word, WordPerfect, MS PowerPoint, or Rich Text files in IBM-PC/Windows 98/2000/XP format).

Accessibility: For information on access or services for individuals with disabilities, please contact Mr. Butterfield at the phone number or e-mail address noted above, preferably at least ten days prior to the meeting to give EPA as much time as possible to process your request.

Dated: July 8, 2008.

Anthony F. Maciorowski,

Deputy Director, EPA Science Advisory Board Staff Office.

[FR Doc. E8–16118 Filed 7–14–08; 8:45 am]

BILLING CODE 6560–50–P

ENVIRONMENTAL PROTECTION AGENCY

[FRL–8692–4]

New York State Prohibition of Marine Discharges of Vessel Sewage; Receipt of Petition and Tentative Affirmative Determination

AGENCY: Environmental Protection Agency (EPA).

ACTION: Notice.

SUMMARY: Notice is hereby given that a petition has been received from the State of New York requesting a determination by the Regional Administrator, U.S. Environmental Protection Agency, that adequate facilities for the safe and sanitary removal and treatment of sewage from all vessels are reasonably available for Hempstead Harbor, Nassau County, New York. The waters of the proposed No Discharge Zone fall within the jurisdictions of the Town of North Hempstead, the Town of Oyster Bay, the County of Nassau, the City of Glen Cove and the Villages of Sea Cliff, Roslyn Harbor, Roslyn, Flower Point and Sands Point. These entities, through the New York Department of State and the Hempstead Harbor Protection Committee prepared the application for the designation of a Vessel Waste No Discharge Zone, which was submitted by the New York State Department of Environmental Conservation (NYSDEC).

DATES: Comments regarding this tentative determination are due by August 14, 2008.

ADDRESSES: Submit your comments using one of the following methods:

E-mail: olander.james@epa.gov.

Fax: (212) 637–3887.

Mail and hand delivery: U.S. Environmental Protection Agency—Region 2, 290 Broadway, 24th Floor, New York, NY 10007–1866. Deliveries are only accepted during the Regional Office's normal hours of operation (8 a.m.–5 p.m., Monday through Friday, excluding legal holidays), and special arrangements should be made for deliveries of boxed information.

FOR FURTHER INFORMATION CONTACT: James L. Olander, U.S. Environmental Protection Agency—Region 2, 290 Broadway, 24th Floor, New York, NY 10007–1866.

Telephone: (212) 637–3833, Fax number: (212) 637–3887; e-mail address: *olander.james@epa.gov.*

SUPPLEMENTARY INFORMATION: Notice is hereby given that a petition has been received from the State of New York requesting a determination by the Regional Administrator, U.S. Environmental Protection Agency, pursuant to section 312(f)(3) of Public Law 92–500 as amended by Public Law 95–217 and Public Law 100–4, that adequate facilities for the safe and sanitary removal and treatment of sewage from all vessels are reasonably available for Hempstead Harbor and its harbors and creeks within the following boundaries: South of a line drawn from Mott Point on the west side of the harbor to a breakwater approximately one-half mile north of Mosquito Cove on the east side of the harbor (Lat 40°52′ N, Long 73°40′ W) within the Villages of Sea Cliff, Roslyn, Roslyn Harbor, Flower Point and Sands Point and the City of Glen Cove.

New York has provided documentation indicating that the total vessel population is estimated to be 1,350 in the proposed area. Five pumpout facilities are operational in the harbor, these facilities are Tappen Marina, Bar Beach, Brewer's Marina, Sea Cliff Yacht Club, and Glen Cove Yacht Club. In addition to these five pumpout facilities, the Towns of North Hempstead Harbor and Oyster Bay each operate pumpout boats that serve the harbor. Based upon the criteria cited in the Clean Vessel Act and based upon the vessel population, Hempstead Harbor requires approximately three to five pumpout facilities. The harbor has seven facilities operational which satisfies the criteria.

Tappen Marina Pumpout is located at 40°50′2.44″ N/73°39′2.93″ W. The pumpout is user operated and available 24 hours per day and 365 days a year. The contact for information on the pumpout is the Town of Oyster Bay Dockmaster or the Parks Commissioner at 516–674–7100 and the facility fee is free. Vessel limitations are 50 feet in length and 10 feet in draft. An onsite septic field is used for disposal, with transport to a wastewater treatment plant as backup.

Brewer's Marina is located at 40°51′16.17″ N/73°38′46.51″ W. The pumpout is user operated and available 24 hours per day from April 1 to November 30, seven days a week. The contact for information is the Brewer's Marina at 516–671–5563 and the facility fee is free. Vessel limitations are 40 feet in length and 6 feet in draft. The pumpout facility is directly connected to the Glen Cove wastewater treatment facility.

Sea Cliff Yacht Club is located at 40°51′11.03″ N/73°38′59.11″ W and is available Memorial Day through October 15th, 9 a.m. until 5 p.m. on weekdays and by appointment on weekends. The contact for information is Jim Kowchesski, Manager, at (516) 671–7374 or the Dockmaster at (516) 671–0193 and the facility fee is $5.00. Vessel limitations are 40 feet in length and 4.5 feet in draft. The pumpout facility discharges to the Glen Cove wastewater treatment facility.

The Town of Oyster Bay Pumpout Boat operates in Hempstead Harbor and Oyster Bay and is available June through October, Friday through Monday. The contact for information is the Town of Oyster Bay at 516–677–5711 or VHF Channel 9 and the fee is free. No vessel limitations exist. The Roosevelt Marina pumpout is used for disposal sewage from the pumpout boat and the marina pumpout discharges to the Oyster Bay Sewer District wastewater treatment plant.

The Town of North Hempstead Pumpout Boat operates in Hempstead Harbor and Manhasset Bay and is available June through September, Wednesday through Sunday. The contact for information is the Town of Hempstead at 516–767–4622 or VHF Channel 9 and the fee is free. No vessel limitations exist. The pumpout boat discharges to the local sewer at Town dock. While Bar Beach and the Glen Cove Yacht Club pumpout facilities are listed in the petition, no information is provided regarding location, contact information or fees.

The EPA hereby makes a tentative affirmative determination that adequate facilities for the safe and sanitary removal and treatment of sewage from all vessels are reasonably available for Hempstead Harbor in the County of Nassau, New York. A 30-day period for public comment has been opened on this matter.

Dated: June 27, 2008.

George Pavlou,

Acting Regional Administrator, Region 2.

[FR Doc. E8–16119 Filed 7–14–08; 8:45 am]

BILLING CODE 6560–50–P

ENVIRONMENTAL PROTECTION AGENCY

[FRL–8692–5]

New York State Prohibition of Marine Discharges of Vessel Sewage; Receipt of Petition and Tentative Affirmative Determination

AGENCY: Environmental Protection Agency (EPA).

ACTION: Notice.

SUMMARY: Notice is hereby given that a petition has been received from the State of New York requesting a determination by the Regional Administrator, U.S. Environmental Protection Agency, that adequate facilities for the safe and sanitary removal and treatment of sewage from all vessels are reasonably available for Oyster Bay/Cold Springs Harbor Complex, New York. The waters of the proposed No Discharge Zone fall within the jurisdictions of the Town of Oyster Bay, the Town of Huntington, the Village of Bayville, the Village of Bayville, the Village of Centre Island, the Village of Cove Neck, the Village of Lattingtown, the Village of Laurel Hollow, the Village of Lloyd Harbor, the Village of Mill Neck, the Village of Oyster Bay Cove, the County of Nassau, and the County of Suffolk. These entities submitted an application prepared by Cashin Associates, P.C. for the designation of a Vessel Waste No Discharge Zone. New York State Department of Environmental Conservation certified the need for greater protection of the water quality.

DATES: Comments regarding this tentative determination are due by August 14, 2008.

ADDRESSES: Submit your comments using one of the following methods:

E-mail: olander.james@epa.gov.

Fax: (212) 637–3887.

Mail and hand delivery: U.S. Environmental Protection Agency—Region 2, 290 Broadway, 24th Floor, New York, NY 10007–1866. Deliveries are only accepted during the Regional Office's normal hours of operation (8

a.m.–5 p.m., Monday through Friday, excluding legal holidays), and special arrangements should be made for deliveries of boxed information.

FOR FURTHER INFORMATION CONTACT: James L. Olander, U.S. Environmental Protection Agency—Region 2, 290 Broadway, 24th Floor, New York, NY 10007–1866. Telephone: (212) 637–3833, Fax number: (212) 637–3887; e-mail address: *olander.james@epa.gov.*

SUPPLEMENTARY INFORMATION: Notice is hereby given that a petition has been received from the State of New York requesting a determination by the Regional Administrator, U.S. Environmental Protection Agency, pursuant to section 312(f)(3) of Public Law 92–500 as amended by Public Law 95–217 and Public Law 100–4, that adequate facilities for the safe and sanitary removal and treatment of sewage from all vessels are reasonably available for Oyster Bay/Cold Springs Harbor Complex and its harbors and creeks within the following boundary:

South of a line drawn from Rocky Point on Centre Island in west to Caumsett State Park in the east. The Complex encompasses 6400 acres of open water and intertidal area. The waterbodies included in the Complex are Oyster Bay Harbor between Bayville Bridge and Plum Point on Centre Island, Mill Neck Creek to the west of Bayville Bridge, Cold Spring Harbor south of a line between Cooper Bluff in Cove Neck and West Neck Beach in the Village of Lloyd Harbor, and Oyster Bay between Centre Island and the Lloyd Neck peninsula that connects Oyster Bay Harbor and Cold Spring Harbor to Long Island Sound.

New York has provided documentation indicating that the total vessel population is estimated to be 2,000 in the proposed area. Based upon boat census data, approximately 1000 to 1500 vessels would be equipped with a Type III marine sanitation device (holding tank). Four pumpout facilities are operational in the Complex, these facilities are Roosevelt Marina, Powles Marina, Town of Oyster Bay Pumpout Barges (2–East and West), and Town of Oyster Bay Pumpout Vessel. Based upon the criteria cited in the Clean Vessel Act (a pumpout facility can adequately service 300 to 600 vessels) and based upon the vessel population, the Complex requires approximately three to six pumpout facilities. The harbor has five facilities operational which satisfies the criteria. An additional pumpout boat is available when needed.

Roosevelt Marina Pumpout is located at 40° 52.635″ N/73° 31.805″ W. The pumpout is available 24 hours per day and 365 days a year. The contact for information on the pumpout is the Town of Oyster Bay, Roosevelt Marina Pumpout, VHF Channel 9 or 516–797–4110. The facility fee is free. Vessel limitations are 36 feet in length and 4 feet in draft at dead low tide. The collected vessel sewage is discharged to the sewer and treated at the Oyster Bay Sewer District Wasterwater Treatment Plant.

Powles Marina Pumpout is at 40° 52′ 31.17″ N/73° 28′ 17.94″ W. The pumpout is available 24 hours per day from Mid-April to October 31, seven days a week. The contact for information is the Powles Marina at 631–367–7670 or VHF Channel 9. The facility fee is free. Vessel limitations are 50 feet in length and 5 feet in draft at low tide. The pumpout facility is serviced by the town sewage truck.

Town of Oyster Bay Pumpout Barges are located at 40° 52.657″ N/73° 31.456″ W and 40° 52.804″ N/73° 32.264″ W. The barges are available Mid-April through October 31, 24 hours a day, 7 days per week. The contact for information is Oyster Bay Pumpout Barge on VHF Channel 9. The facility fee is free. Vessel limitations are location dependent. The pumpout barges offload vessel sewage at the Roosevelt Marina Pumpout.

The Town of Oyster Bay Pumpout Vessel operates in the Complex and is available Mid-April through October 31, Thursday through Sunday, from 10 a.m. until 6 p.m. The contact for information is the Town of Oyster Bay Pumpout Vessel on VHF Channel 9. The facility fee is free. The Roosevelt Marina Pumpout is used for disposal sewage from the pumpout boat and the marina pumpout discharges to the Oyster Bay Sewer District wastewater treatment plant.

The EPA hereby makes a tentative affirmative determination that adequate facilities for the safe and sanitary removal and treatment of sewage from all vessels are reasonably available for the Oyster Bay/Cold Spring Harbor Complex in the Counties of Nassau and Suffolk, New York. A 30-day period for public comment has been opened on this matter which may result in a New York State prohibition of any sewage discharges from vessels in for the Oyster Bay/Cold Spring Harbor Complex in the Counties of Nassau and Suffolk, New York.

Dated: June 27, 2008.

George Pavlou,

Acting Regional Administrator, Region 2.

[FR Doc. E8–16120 Filed 7–14–08; 8:45 am]

BILLING CODE 6560–50–P

FEDERAL MARITIME COMMISSION

Meetings; Sunshine Act

AGENCY HOLDING THE MEETING: Federal Maritime Commission.

FEDERAL REGISTER CITATION OF PREVIOUS ANNOUNCEMENT: 73 FR 38214.

PREVIOUSLY ANNOUNCED TIME AND DATE OF THE MEETING: 10 a.m.–July 9, 2008.

CHANGES: The addition of Item 2 in the Open Session of the Meeting.

Item 2—Application of Japan Grace Co., Inc. for a Certificate (Performance) Using an Escrow Agreement as Evidence of Section 3, Public Law 89–777 Financial Responsibility.

CONTACT PERSON FOR MORE INFORMATION: Karen V. Gregory, Assistant Secretary, (202) 523–5725.

Karen V. Gregory,

Assistant Secretary.

[FR Doc. E8–16138 Filed 7–14–08; 8:45 am]

BILLING CODE 6730–01–P

FEDERAL RESERVE SYSTEM

Sunshine Act Meeting

AGENCY HOLDING THE MEETING: Board of Governors of the Federal Reserve System.

TIME AND DATE: 11:30 a.m., Monday, July 21, 2008.

PLACE: Marriner S. Eccles Federal Reserve Board Building, 20th and C Streets, N.W., Washington, D.C. 20551.

STATUS: Closed.

MATTERS TO BE CONSIDERED:

1. Personnel actions (appointments, promotions, assignments, reassignments, and salary actions) involving individual Federal Reserve System employees.

2. Any items carried forward from a previously announced meeting.

FOR FURTHER INFORMATION CONTACT: Michelle Smith, Director, or Dave Skidmore, Assistant to the Board, Office of Board Members at 202–452–2955.

SUPPLEMENTARY INFORMATION: You may call 202–452–3206 beginning at approximately 5 p.m. two business days before the meeting for a recorded announcement of bank and bank holding company applications scheduled for the meeting; or you may contact the Board's Web site at *http://www.federalreserve.gov* for an electronic announcement that not only lists applications, but also indicates procedural and other information about the meeting.

Board of Governors of the Federal Reserve System, July 11, 2008.

Robert deV. Frierson,

Deputy Secretary of the Board.

[FR Doc. 08–1439 Filed 7–11–08; 3:10 pm]

BILLING CODE 6210–01–S

FEDERAL RESERVE SYSTEM

Notice of Proposals to Engage in Permissible Nonbanking Activities or to Acquire Companies that are Engaged in Permissible Nonbanking Activities

The companies listed in this notice have given notice under section 4 of the Bank Holding Company Act (12 U.S.C. 1843) (BHC Act) and Regulation Y (12 CFR Part 225) to engage *de novo*, or to acquire or control voting securities or assets of a company, including the companies listed below, that engages either directly or through a subsidiary or other company, in a nonbanking activity that is listed in § 225.28 of Regulation Y (12 CFR 225.28) or that the Board has determined by Order to be closely related to banking and permissible for bank holding companies. Unless otherwise noted, these activities will be conducted throughout the United States.

Each notice is available for inspection at the Federal Reserve Bank indicated. The notice also will be available for inspection at the offices of the Board of Governors. Interested persons may express their views in writing on the question whether the proposal complies with the standards of section 4 of the BHC Act. Additional information on all bank holding companies may be obtained from the National Information Center website at *www.ffiec.gov/nic/*.

Unless otherwise noted, comments regarding the applications must be received at the Reserve Bank indicated or the offices of the Board of Governors not later than July 30, 2008.

A. Federal Reserve Bank of Chicago (Burl Thornton, Assistant Vice President) 230 South LaSalle Street, Chicago, Illinois 60690-1414:

1. Country Bancorporation, Crawfordsville, Iowa; to continue to engage in extending credit and servicing loans pursuant to section 225.28(b)(1) of Regulation Y.

Board of Governors of the Federal Reserve System, July 10, 2008.

Robert deV. Frierson,

Deputy Secretary of the Board.

[FR Doc. E8–16097 Filed 7–14–08; 8:45 am]

BILLING CODE 6210–01–S

FEDERAL TRADE COMMISSION

Franchise Rule Information Collection Activities; Proposed Collection; Comment Request

AGENCY: Federal Trade Commission (''Commission'' or ''FTC'').

ACTION: Notice.

SUMMARY: The information collection requirements described below will be submitted to the Office of Management and Budget (''OMB'') for review, as required by the Paperwork Reduction Act (''PRA''). The FTC is seeking public comments on its proposal to extend through October 31, 2011, the current PRA clearance for information collection requirements contained in its Trade Regulation Rule on Disclosure Requirements and Prohibitions Concerning Franchising (''Franchise Rule''). That clearance expires on October 31, 2008.

DATES: Comments must be submitted on or before September 15, 2008.

ADDRESSES: Interested parties are invited to submit written comments. Comments should refer to ''16 CFR Part 436, Paperwork Comment, FTC File No. R511003'' to facilitate the organization of comments. A comment filed in paper form should include this reference both in the text and on the envelope and should be mailed or delivered to the following address: Federal Trade Commission, Office of the Secretary, Room H-135 (Annex J), 600 Pennsylvania Avenue, N.W., Washington, D.C. 20580. Because paper mail in the Washington area and at the FTC is subject to delay, please consider submitting your comments in electronic form, as prescribed below. If, however, the comment contains any material for which confidential treatment is requested, the comment must be filed in paper form, and the first page of the document must be clearly labeled ''Confidential.''[1]

Comments filed in electronic form should be submitted by following the instructions on the web-based form at: (*https://secure.commentworks.com/ftc-franchiserule.*) To ensure that the Commission considers an electronic comment, you must file it on the web-based form at (*https://secure.commentworks.com/ftc-franchiserule.*) You may also visit *http://www.regulations.gov* to read this notice, and may file an electronic comment through that website. The Commission will consider all comments that *www.regulations.gov* forwards to it.

The FTC Act and other laws the Commission administers permit the collection of public comments to consider and use in this proceeding as appropriate. All timely and responsive public comments will be considered by the Commission and will be available to the public on the FTC website, to the extent practicable, at *www.ftc.gov*. As a matter of discretion, the FTC makes every effort to remove home contact information for individuals from the public comments it receives before placing those comments on the FTC website. More information, including routine uses permitted by the Privacy Act, may be found in the FTC's privacy policy at (*http://www.ftc.gov/ftc/privacy.shtm*).

FOR FURTHER INFORMATION CONTACT: Requests for additional information or copies of the proposed information requirements for the Franchise Rule should be addressed to Craig Tregillus, Staff Attorney, Division of Marketing Practices, Bureau of Consumer Protection, Federal Trade Commission, Room H-238, 600 Pennsylvania Ave., N.W., Washington, D.C. 20580, (202) 326-2970.

SUPPLEMENTARY INFORMATION: Under the PRA, 44 U.S.C. 3501-3521, federal agencies must obtain approval from OMB for each collection of information they conduct or sponsor. ''Collection of information'' means agency requests or requirements that members of the public submit reports, keep records, or provide information to a third party. 44 U.S.C. 3502(3); 5 CFR 1320.3(c). As required by section 3506(c)(2)(A) of the PRA, the FTC is providing this opportunity for public comment before requesting that OMB extend the existing paperwork clearance for the Franchise Rule, 16 CFR Part 436 (OMB Control Number 3084-0107).

The FTC invites comments on: (1) whether the proposed collection of information is necessary for the proper performance of the functions of the agency, including whether the information will have practical utility; (2) the accuracy of the agency's estimate of the burden of the proposed collection of information, including the validity of the methodology and assumptions used; (3) ways to enhance the quality, utility, and clarity of the information to be collected; and (4) ways to minimize the burden of the collection of information on those who are to respond, including

[1] Commission Rule 4.2(d), 16 CFR 4.2(d). The comment must be accompanied by an explicit request for confidential treatment, including the factual and legal basis for the request, and must identify the specific portions of the comment to be withheld from the public record. The request will be granted or denied by the Commission's General Counsel, consistent with applicable law and the public interest. *See* Commission Rule 4.9(c), 16 CFR 4.9(c).

through the use of appropriate automated, electronic, mechanical, or other technological collection techniques or other forms of information technology, *e.g.*, permitting electronic submission of responses.

The Franchise Rule ensures that consumers who are considering a franchise investment have access to the material information they need to make an informed investment decision provided in a format that facilitates comparisons of different franchise offerings. The Rule requires that franchisors disclose this information to consumers and maintain records to facilitate enforcement of the Rule. Revisions to the Rule promulgated on March 30, 2007,[2] which took final effect on July 1, 2008, after a one-year phase-in, largely merged the Rule's disclosure requirements with the Uniform Franchise Offering Circular (''UFOC'') disclosure format accepted by 15 states that have franchise registration and disclosure laws. This should significantly minimize any compliance burden beyond what is now required by state law.

As amended, the Rule requires franchisors to furnish to prospective purchasers a disclosure document that provides information relating to the franchisor, its business, the nature of the proposed franchise, and any representations by the franchisor about financial performance regarding actual or potential sales, income, or profits made to a prospective franchise purchaser. The franchisor must preserve materially different copies of its disclosures and franchise agreements, as well as information that forms a reasonable basis for any financial performance representation it elects to make. These requirements are subject to the PRA, and for which the Commission seeks to extend existing clearance.[3]

Estimated annual hours burden: 16,750 hours

Based on a review of trade publications and information from state regulatory authorities, staff believes that, on average, from year to year, there are approximately 2,500 sellers of franchises covered by the Rule, with perhaps about 10% of that total reflecting an equal amount of new and departing business entrants.[4] Staff's burden hour estimate reflects the incremental burden that part 436 may impose beyond the information and recordkeeping requirements imposed by state law and/or followed by franchisors who have been using the UFOC disclosure format nationwide.[5] This estimate likely overstates the actual incremental burden because some franchisors, for various reasons, may not be covered by the Rule (*e.g.*, they sell only franchises that qualify for the Rule's large franchise investment exemption of at least $1 million).[6]

For October 31, 2008 to October 31, 2009, the first twelve months of prospective 3-year renewed PRA clearance, staff estimates that the average annual disclosure burden to update existing disclosure documents will be three hours each year for the 2,250 established franchisors, or 6,750 hours (3 x 2,250), and 30 hours each year for the 250 or so new entrant franchisors to prepare their initial disclosure documents, or 7,500 hours (30 x 250). These estimates for the amended Rule are based on staff's prior estimates for the original Rule, and further adopt the analysis of the 2005 clearance request and the Statement of Basis and Purpose (''SBP'') for the amended Rule.[7]

As discussed in the 2005 Notices and the SBP, as under the original Rule, covered franchisors also may need to maintain additional documentation for the sale of franchises in non-registration states, which could take up to an additional hour of recordkeeping per year. This yields an additional cumulative total of 2,500 hours per year for covered franchisors (1 hour x 2,500 franchisors).

Part 436 of the amended Rule would also increase franchisors' recordkeeping obligations. Specifically, a franchisor would be required to retain copies of receipts for disclosure documents, as well as materially different versions of its disclosure documents. Such recordkeeping requirements, however, are consistent with, or less burdensome, than those imposed by the states.

Thus, staff estimates the average hours burden for new and established franchisors during the three-year clearance period ahead would be 16,750 ((30 hours of annual disclosure burden x 250 new franchisors = 7,500 hours) + (3 hours of average annual disclosure burden x 2,250 established franchisors = 6,750 hours) + (1 hour of annual recordkeeping burden x 2,500 franchisors = 2,500 hours)).

Estimated annual labor cost burden for part 436: $3,595,000

Labor costs are derived by applying appropriate hourly cost figures to the burden hours described above. The hourly rates used below are estimated averages.

As stated in the 2005 Notices, staff believes that an attorney will prepare the disclosure document, and at an estimated $250 per hour. Accordingly, staff estimates that 250 new franchisors will each annually incur $7,500 in labor costs (30 hours x $250 per hour) and 2,250 established franchisors will each incur $750, annually, in labor costs (3 hours x $250 per hour).

Further, staff anticipates that recordkeeping under part 436 will be performed by clerical staff at approximately $13 per hour. Thus, 2,500 hours of recordkeeping burden per year for all covered franchisors will amount to a total annual labor cost of $32,500.

Cumulatively, then, total estimated labor costs under part 436 is $3,595,000 (($7,500 attorney costs x 250 new franchisors = $1,875,000) + ($750 attorney costs x 2,250 established franchisors =$1,687,500) + ($13 clerical costs x 2,500 franchisors = $32,500)).

Estimated non-labor costs for part 436: $8,000,000

As an initial matter, in developing cost estimates, Commission staff consulted with practitioners who prepare disclosure documents for a cross-section of franchise systems. Accordingly, the Commission believes that its cost estimates are representative of the costs incurred by franchise systems generally. In addition, many franchisors establish and maintain

[2] 72 FR 15444 *et seq.*

[3] The current clearance under OMB Control Number 3084-0107 covers the disclosure and recordkeeping requirements of the original Franchise Rule, 16 CFR Part 436, which applied both to the sale of franchises and of business opportunity ventures. The disclosure and recordkeeping requirements applicable to business opportunity ventures are now separately set forth in 16 CFR Part 437, and are covered under recently assigned OMB Control Number 3084-0142. The portion of the prior clearance applicable to business format franchisors under Part 436 retains the pre-existing OMB Control Number 3084-0107.

[4] This is one-half of the number used in the 2005 clearance request, when both franchises and busienss opportunities were covered by the Rule, and reflects the fact that business opportunities are now separately covered by Part 437 and a separate OMB clearance. This number appears to be consistent with the number of business format franchise offerings registered in compliance with state franchise laws, and listed in franchise directories.

[5] Staff estimates that about 95 percent of all franchisors use the UFOC format because the original Franchise Rule authorized use of the UFOC in lieu of the Rule disclosure format to satisfy the Rule's disclosure requirements in order to reduce compliance burdens.

[6] 16 CFR 436.8(a)(5). This exemption was added by the amended Rule.

[7] 70 FR 28937, 28940 (May 19, 2005); 70 FR 51817, 51819 (Aug. 31, 2005) (''2005 Notices''); 72 FR 15444, 15542 (Mar. 30, 2007). Although the 2005 Notices and the amended Rule's SBP assumed that additional time (cumulatively, 2,750 hours) would be required to prepare disclosures during the transition to compliance with the amended Rule, the one-year transition period ended on July 1, 2008, when the amended Rule took full effect.

websites for ordinary business purposes, including advertising their goods or services and to facilitate communication with the public. Accordingly, any costs franchisors would incur specifically as a result of electronic disclosure under part 436 appear to be minimal.

As set forth in the 2005 Notices, staff estimates that the non-labor burden incurred by franchisors under part 436 will differ based on the length of the disclosure document and the number of disclosure documents produced. Staff estimates that 2,000 franchisors (80% of total franchisors covered by the Rule) will print and mail 100 disclosure documents at $35 each. Thus, these franchisors will each incur $3,500 in printing and mailing costs. Staff estimates that the remaining 20% of covered franchisors (500) will transmit 50% of their 100 disclosure documents electronically, at $5 per electronic disclosure. Thus, these franchisors will each incur $2,000 in distribution costs (($250 for electronic disclosure [$5 for electronic disclosure x 50 disclosure documents]) + ($1,750 for printing and mailing [$35 for printing and mailing x 50 disclosure documents])).

Accordingly, the cumulative annual non-labor costs for part 436 of the amended Rule is approximately $8,000,000 (($3,500 printing and mailing costs x 2,000 franchisors = $7,000,000) + ($250 electronic distribution costs + $1,750 printing and mailing costs) x 500 franchisors = $1,000,000)).

William Blumenthal

General Counsel

[FR Doc. E8–16092 Filed 7–15–08: 8:45 am]

[BILLING CODE 6750–01–S]

DEPARTMENT OF HEALTH AND HUMAN SERVICES

Centers for Disease Control and Prevention (CDC)

National Institute for Occupational Safety and Health (NIOSH) Advisory Board on Radiation and Worker Health (ABRWH orAdvisory Board)

In accordance with section 10(a)(2) of the Federal Advisory Committee Act (Pub. L. 92–463), the Centers for Disease Control and Prevention announces the following committee meeting:

Name: Advisory Board on Radiation and Worker Health, National Institute for Occupational Safety and Health.

Audio Conference Call Time And Date: 11 a.m.–4 p.m., EDT, Tuesday, August 5, 2008.

Place: Audio Conference Call via FTS Conferencing. The USA toll free dial in number is 1–866–659–0537 with a pass code of 9933701.

Status: Open to the public, but without a public comment period.

Background: The Advisory Board was established under the Energy Employees Occupational Illness Compensation Program Act of 2000 to advise the President on a variety of policy and technical functions required to implement and effectively manage the new compensation program. Key functions of the Advisory Board include providing advice on the development of probability of causation guidelines which have been promulgated by the Department of Health and Human Services (HHS) as a final rule, advice on methods of dose reconstruction which have also been promulgated by HHS as a final rule, advice on the scientific validity and quality of dose estimation and reconstruction efforts being performed for purposes of the compensation program, and advice on petitions to add classes of workers to the Special Exposure Cohort (SEC). In December 2000, the President delegated responsibility for funding, staffing, and operating the Advisory Board to HHS, which subsequently delegated this authority to the CDC. NIOSH implements this responsibility for CDC. The charter was issued on August 3, 2001, renewed at appropriate intervals, most recently, August 3, 2007, and will expire on August 3, 2009.

Purpose: This Advisory Board is charged with (a) Providing advice to the Secretary, HHS, on the development of guidelines under Executive Order 13179; (b) providing advice to the Secretary, HHS, on the scientific validity and quality of dose reconstruction efforts performed for this program; and (c) upon request by the Secretary, HHS, advising the Secretary on whether there is a class of employees at any Department of Energy facility who were exposed to radiation but for whom it is not feasible to estimate their radiation dose, and on whether there is reasonable likelihood that such radiation doses may have endangered the health of members of this class.

Matters to be Discussed: The agenda for the conference call includes: Special Exposure Cohort (SEC) Petition Status Updates; Updates from the Subcommittee on Dose Reconstruction and Work Groups; Update on selection of the Board's contractor; Future Plans; and Status of transcripts and minutes.

The agenda is subject to change as priorities dictate.

Because there is not a public comment period, written comments may be submitted. Any written comments received will be included in the official record of the meeting and should be submitted to the contact person below well in advance of the meeting.

Contact Person for More Information: Zaida Burgos, Committee Management Specialist, NIOSH, CDC, 1600 Clifton Road, Atlanta, Georgia 30033, Telephone (404) 498–2548 e-mail: *zab6@cdc.gov.*

Toll Free 1–800–CDC-INFO, e-mail *ocas@cdc.gov.*

The Director, Management Analysis and Services Office, has been delegated the authority to sign **Federal Register** notices pertaining to announcements of meetings and other committee management activities, for both CDC and the Agency for Toxic Substances and Disease Registry.

Dated: July 8, 2008.

Elaine L. Baker,

Director, Management Analysis and Services Office, Centers for Disease Control and Prevention.

[FR Doc. E8–16065 Filed 7–14–08; 8:45 am]

BILLING CODE 4163–18–P

DEPARTMENT OF HEALTH AND HUMAN SERVICES

Food and Drug Administration

[Docket No. FDA–2007–P–0326]

Determination That SANOREX (Mazindol) Tablets 1 and 2 Milligrams Were Not Withdrawn From Sale for Reasons of Safety or Effectiveness

AGENCY: Food and Drug Administration, HHS.

ACTION: Notice.

SUMMARY: The Food and Drug Administration (FDA) is announcing its determination that SANOREX (mazindol) Tablets, 1 and 2 milligrams (mg), were not withdrawn from sale for reasons of safety or effectiveness. This determination will allow FDA to approve abbreviated new drug applications (ANDAs) for mazindol tablets if all other legal and regulatory requirements are met.

FOR FURTHER INFORMATION CONTACT: Carol E. Drew, Center for Drug Evaluation and Research, Food and Drug Administration, 10903 New Hampshire Ave., Bldg. 51, rm. 6306 Silver Spring, MD 20993–0002, 301–796–3601.

SUPPLEMENTARY INFORMATION: In 1984, Congress enacted the Drug Price Competition and Patent Term Restoration Act of 1984 (Public Law 98–417) (the 1984 amendments), which authorized the approval of duplicate versions of drug products approved under an ANDA procedure. ANDA applicants must, with certain exceptions, show that the drug for which they are seeking approval contains the same active ingredient in the same strength and dosage form as the ''listed drug,'' which is a version of the drug that was previously approved. ANDA applicants do not have to repeat the extensive clinical testing otherwise necessary to gain approval of a new drug application (NDA). The only clinical data required in an ANDA are data to show that the drug that is the subject of the ANDA is bioequivalent to the listed drug.

The 1984 amendments include what is now section 505(j)(7) of the Federal Food, Drug, and Cosmetic Act (21 U.S.C. 355(j)(7)), which requires FDA to publish a list of all approved drugs. FDA publishes this list as part of the ''Approved Drug Products With Therapeutic Equivalence Evaluations,'' which is known generally as the ''Orange Book.'' Under FDA regulations, drugs are removed from the list if the agency withdraws or suspends approval of the drug's NDA or ANDA for reasons of safety or effectiveness, or if FDA determines that the listed drug was withdrawn from sale for reasons of safety or effectiveness (21 CFR 314.162). Regulations also provide that the agency must make a determination as to whether a listed drug was withdrawn from sale for reasons of safety or effectiveness before an ANDA that refers to that listed drug may be approved (§ 314.161(a)(1) (21 CFR 314.161(a)(1))). FDA may not approve an ANDA that does not refer to a listed drug.

On August 20, 2007, AAIPharma submitted a citizen petition (Docket No. 2007P–0326/CP1) to FDA under 21 CFR 10.30. The petition requests that the agency determine whether SANOREX (mazindol) Tablets, 1 and 2 mg (NDA 17–247), manufactured by Novartis Pharmaceuticals Corp. (Novartis), were withdrawn from sale for reasons of safety or effectiveness. SANOREX is approved for the management of exogenous obesity as a short term adjunct in a regimen of weight reduction based on caloric restriction in certain patients. SANOREX Tablets were approved on June 14, 1973. SANOREX Tablets were discontinued in 1999, and the drug product was moved from the prescription drug product list to the ''Discontinued Drug Product List'' section of the Orange Book.

FDA has reviewed its records and, under § 314.161, has determined that SANOREX Tablets, 1 and 2 mg, were not withdrawn from sale for reasons of safety or effectiveness. The petitioner identified no data or other information suggesting that SANOREX Tablets, 1 and 2 mg, were withdrawn for reasons of safety or effectiveness. FDA has independently evaluated relevant literature and data for possible postmarketing adverse events and has found no information that would indicate that this product was withdrawn from sale for reasons of safety or effectiveness. Accordingly, the agency will continue to list SANOREX Tablets 1 and 2 mg in the ''Discontinued Drug Product List'' section of the Orange Book. The ''Discontinued Drug Product List'' delineates, among other items, drug products that have been discontinued from marketing for reasons other than safety or effectiveness. ANDAs that refer to SANOREX (mazindol) Tablets, 1 and 2 mg, may be approved by the agency if all other legal and regulatory requirements for the approval of ANDAs are met. If FDA determines that labeling for this drug product should be revised to meet current standards, the agency will advise ANDA applicants to submit such labeling.

Dated: July 3, 2008.

Jeffrey Shuren,

Associate Commissioner for Policy and Planning.

[FR Doc. E8–15998 Filed 7–14–08; 8:45 am]

BILLING CODE 4160–01–S

DEPARTMENT OF HEALTH AND HUMAN SERVICES

Food and Drug Administration

[Docket No. FDA–2008–N–0356]

Global Harmonization Task Force, Study Groups 1 and 3; Proposed and Final Documents; Availability

AGENCY: Food and Drug Administration, HHS.

ACTION: Notice.

SUMMARY: The Food and Drug Administration (FDA) is announcing the availability of final and proposed documents that have been prepared by Study Groups 1 and 3 of the Global Harmonization Task Force (GHTF), respectively. These documents represent a harmonized proposal and recommendation from the GHTF Study Groups that may be used by governments developing and updating their regulatory requirements for medical devices. These documents are intended to provide information only and do not describe FDA's current regulatory requirements; elements of these documents may not be consistent with current U.S. regulatory requirements. In particular, FDA seeks comments on the advantages and disadvantages of the approaches in the GHTF documents, particularly where they are not consistent with current practices for the manufacturer of products distributed within the United States.

DATES: Submit written or electronic comments on these documents by October 14, 2008. After October 14, 2008, written comments or electronic comments may be submitted at any time to the contact persons listed in this document.

ADDRESSES: Submit written requests for single copies of these documents to the Division of Small Manufacturers, International, and Consumer Assistance (HFZ–220), Center for Devices and Radiological Health, Food and Drug Administration, 1350 Piccard Dr., Rockville, MD 20850. Send one self-addressed adhesive label to assist that office in processing your request, or fax your request to 240–276–3151. See the **SUPPLEMENTARY INFORMATION** section for information on electronic access to the documents.

Submit written comments concerning these documents to the Division of Dockets Management (HFA–305), Food and Drug Administration, 5630 Fishers Lane, rm. 1061, Rockville, MD 20852. Submit electronic comments to *http://www.reguations.gov*. Identify comments with the docket number found in brackets in the heading of this document.

FOR FURTHER INFORMATION CONTACT: *For information regarding Study Group 1*: Ginette Y. Michaud, Chairperson, GHTF, Study Group 1, Office of Device Evaluation, Center for Devices and Radiological Health (HFZ–480), Food and Drug Administration, 9200 Corporate Blvd., Rockville, MD 20850, 240–276–3700.

For information regarding Study Group 3: Kimberly Trautman, GHTF, Study Group 3, Office of Compliance, Center for Devices and Radiological Health (HFZ–340), Food and Drug Administration, 2094 Gaither Rd., Rockville, MD 20850, 240–276–0296.

SUPPLEMENTARY INFORMATION:

I. Background

FDA has participated in a number of activities to promote the international harmonization of regulatory requirements. In September 1992, a meeting was held in Nice, France by senior regulatory officials to evaluate international harmonization. This meeting led to the development of the organization now known as the GHTF to facilitate harmonization. Subsequent meetings have been held in various locations throughout the world.

The GHTF is a voluntary group of representatives from national medical device regulatory authorities and the regulated industry. Since its inception, the GHTF has been comprised of representatives from five founding members grouped into three geographical areas: Europe, Asia-Pacific, and North America, each of which actively regulates medical devices using their own unique regulatory framework.

The objective of the GHTF is to encourage convergence at the global

level of regulatory systems of medical devices to facilitate trade while preserving the right of participating members to address the protection of public health by regulatory means considered most suitable. One of the ways this objective is achieved is by identifying and developing areas of international cooperation to facilitate progressive reduction of technical and regulatory differences in systems established to regulate medical devices. In an effort to accomplish these objectives, the GHTF formed five study groups to draft documents and carry on other activities designed to facilitate global harmonization. This notice relates to documents that have been developed by two of the Study Groups (1 and 3).

Study Group 1 was initially tasked with the responsibility of identifying differences between various regulatory systems. In 1995, the group was asked to propose areas of potential harmonization for premarket device regulations and possible guidelines that could help lead to harmonization. As a result of its efforts, this group has developed final document GHTF/SG1/N011:2008. GHTF/SG1/N011:2008 ''Summary Technical Documentation for Demonstrating Conformity to the Essential Principles of Safety and Performance of Medical Devices (STED)'' is intended to provide information on the content of the STED to be assembled and submitted to a Regulatory Authority (RA) or Conformity Assessment Body (CAB) for premarket review, and for use postmarket to assess continuing conformity to GHTF Study Group 1's document, GHTF/SG1/N41R9:2005, ''Essential Principles of Safety and Performance.''

Study Group 3 was initially tasked with the responsibility of developing documents on Quality Systems. As a result of their efforts, this group has developed proposed document SG3(PD)N17R7. The proposed document SG3(PD)N17R7 entitled, ''Quality Management System—Medical Devices—Guidance on the Control of Products and Services Obtained From Suppliers'' provides information for medical device manufacturers on control of products and services obtained from suppliers.

II. Significance of Documents

These documents represent recommendations from the GHTF study groups and do not describe regulatory requirements. FDA is making these documents available so that industry and other members of the public may express their views and opinions. In particular, FDA seeks comments on the advantages and disadvantages of the approaches in the GHTF documents, particular where they are not consistent with current practices for the manufacturer of products distributed in the United States.

III. Electronic Access

Persons interested in obtaining a copy of these documents may do so by using the Internet. The Center for Devices and Radiological Health (CDRH) maintains an entry on the Internet for easy access to information including text, graphics, and files that may be downloaded to a personal computer with Internet access. Updated on a regular basis, the CDRH home page includes device safety alerts, **Federal Register** reprints, information on premarket submissions (including lists of approved applications and manufacturers' addresses), small manufacturer's assistance, information on video conferencing and electronic submissions, Mammography Matters, and other device-oriented information. Information on the GHTF may be accessed at *http://www.ghtf.org*. The CDRH Web site may be accessed at *http://www.fda.gov/cdrh*.

IV. Comments

Interested persons may submit to the Division of Dockets Management (see **ADDRESSES**), written or electronic comments regarding these documents. Submit a single copy of electronic comments or two paper copies of any mailed comments, except that individuals may submit one paper copy. Comments are to be identified with the docket number found in brackets in the heading of this document. Received comments may be seen in the Division of Dockets Management between 9 a.m. and 4 p.m., Monday through Friday.

Please note that on January 15, 2008, the FDA Division of Dockets Management Web site transitioned to the Federal Dockets Management System (FDMS). FDMS is a Government-wide, electronic docket management system. Electronic comments or submissions will be accepted by FDA only through FDMS at *http://www.regulations.gov*.

Dated: July 8, 2008.

Jeffrey Shuren,

Associate Commissioner for Policy and Planning.

[FR Doc. E8–16000 Filed 7–14–08; 8:45 am]

BILLING CODE 4160–01–S

DEPARTMENT OF HEALTH AND HUMAN SERVICES

Food and Drug Administration

[Docket No. FDA–2005–D–0157] (formerly Docket No. 2005D–0286)

Guidance for Industry: Current Good Manufacturing Practice for Phase 1 Investigational Drugs; Availability

AGENCY: Food and Drug Administration, HHS.

ACTION: Notice.

SUMMARY: The Food and Drug Administration (FDA) is announcing the availability of a document entitled ''Guidance for Industry: CGMP for Phase 1 Investigational Drugs'' dated July 2008. The guidance provides assistance in applying relevant current good manufacturing practice (CGMP) requirements of the Federal Food, Drug, and Cosmetic Act (the act) to the manufacture of most investigational new drugs, including biological drugs, used in phase 1 clinical trials. FDA is issuing this guidance concurrently with a final rule published elsewhere in this issue of the **Federal Register** specifying that compliance with FDA's CGMP regulations is not required for most investigational drugs that are manufactured for use in phase 1 clinical trials. Therefore, FDA is recommending the approaches outlined in this guidance for complying with the statutory CGMP requirements in the act. The guidance announced in this notice finalizes the draft guidance entitled ''INDs—Approaches to Complying with CGMP During Phase 1'' dated January 2006.

DATES: Submit written or electronic comments on agency guidances at any time.

ADDRESSES: Submit written requests for single copies of the guidance to the Division of Drug Information (HFD–240), Center for Drug Evaluation and Research, Food and Drug Administration, 5600 Fishers Lane, Rockville, MD 20857, or the Office of Communication, Training, and Manufacturers Assistance (HFM–40), Center for Biologics Evaluation and Research (CBER), Food and Drug Administration, 1401 Rockville Pike, suite 200N, Rockville, MD 20852–1448. Send one self-addressed adhesive label to assist the office in processing your requests. The guidance may also be obtained by mail by calling CBER at 1–800–835–4709 or 301–827–1800. See the **SUPPLEMENTARY INFORMATION** section for electronic access to the guidance document.

Submit written comments on the guidance to the Division of Dockets Management (HFA–305), Food and Drug Administration, 5630 Fishers Lane, rm. 1061, Rockville, MD 20852. Submit electronic comments to *http://www.regulations.gov*.

FOR FURTHER INFORMATION CONTACT: Monica Caphart, Center for Drug Evaluation and Research (HFD–320), Food and Drug Administration, 11919 Rockville Pike, Rockville, MD 20852, 301–827–9047, or Christopher Joneckis, Center for Biologics Evaluation and Research (HFM–1), Food and Drug Administration, 1401 Rockville Pike, suite 200N, Rockville, MD 20852–1448, 301–827–5000.

SUPPLEMENTARY INFORMATION:

I. Background

FDA is announcing the availability of a document entitled ''Guidance for Industry: CGMP for Phase 1 Investigational Drugs'' dated July 2008. This guidance provides assistance in applying CGMP required under section 501(a)(2)(B) of the act (21 U.S.C. 351(a)(2)(B)) in the manufacture of most investigational new drugs used in phase 1 clinical trials (phase 1 investigational drugs). The guidance is being issued concurrently with a final rule that specifies that the manufacture of most investigational new drugs manufactured for use in phase 1 clinical trials do not have to comply with the specific regulatory requirements in part 211 (21 CFR part 211).

Because a phase 1 clinical trial initially introduces an investigational new drug into human subjects, appropriate CGMP helps ensure subject safety. This guidance applies, as part of CGMP, quality control principles to the manufacture of phase 1 investigational drugs (i.e., interpreting and implementing CGMP consistent with good scientific methodology), which foster CGMP activities that are more appropriate for phase 1 clinical trials, improve the quality of phase 1 investigational drugs, and facilitate the initiation of investigational clinical trials in humans while continuing to protect trial subjects. For the manufacture of phase 1 investigational drugs described in this guidance (see section III of the guidance), this guidance will replace the guidance issued in 1991 (56 FR 7048, February 21, 1991) entitled ''Preparation of Investigational New Drug Products (Human and Animal)'' (the 1991 guidance). However, the 1991 guidance still applies to the manufacture of investigational new products (human and animal) used in phase 2 and phase 3 clinical trials.

In the **Federal Register** of January 17, 2006 (71 FR 2552), FDA announced the availability of the draft guidance entitled ''INDs—Approaches to Complying with CGMP During Phase 1'' dated January 2006. FDA received a moderate number of comments on the draft guidance and those comments were considered as the guidance was finalized. The guidance announced in this notice finalizes the draft guidance dated January 2006.

The guidance is being issued consistent with FDA's good guidance practices regulation (21 CFR 10.115). The guidance represents FDA's current thinking on this topic. It does not create or confer any rights for or on any person and does not operate to bind FDA or the public. An alternative approach may be used if such approach satisfies the requirements of the applicable statutes and regulations.

II. Paperwork Reduction Act of 1995

This guidance refers to previously approved collections of information found in FDA regulations. These collections of information are subject to review by the Office of Management and Budget (OMB) under the Paperwork Reduction Act of 1995 (44 U.S.C. 3501–3520). The collections of information in this guidance for part 211 have been approved under OMB control number 0910–0139.

III. Comments

Interested persons may submit to the Division of Dockets Management (see **ADDRESSES**) written or electronic comments regarding the guidance. Submit a single copy of electronic comments or two paper copies of any mailed comments, except that individuals may submit one paper copy. Comments are to be identified with the docket number found in brackets in the heading of this document. A copy of the guidance and received comments may be seen in the Division of Dockets Management between 9 a.m. and 4 p.m., Monday through Friday.

Please note that on January 15, 2008, the FDA Division of Dockets Management Web site transitioned to the Federal Dockets Management System (FDMS). FDMS is a Government-wide, electronic docket management system. Electronic comments or submissions will be accepted by FDA only through FDMS at *http://www.regulations.gov*.

IV. Electronic Access

Persons with access to the Internet may obtain the guidance at *http://www.fda.gov/cder/guidance/index.htm*, *http://www.fda.gov/cber/guidelines.htm*, or *http://www.regulations.gov*.

Dated: July 9, 2008.

Jeffrey Shuren,

Associate Comissioner for Policy and Planning.

[FR Doc. E8–16002 Filed 7–14–08; 8:45 am]

BILLING CODE 4160–01–S

DEPARTMENT OF HEALTH AND HUMAN SERVICES

National Institutes of Health

Government-Owned Inventions; Availability for Licensing

AGENCY: National Institutes of Health, Public Health Service, HHS.

ACTION: Notice.

SUMMARY: The inventions listed below are owned by an agency of the U.S. Government and are available for licensing in the U.S. in accordance with 35 U.S.C. 207 to achieve expeditious commercialization of results of federally-funded research and development. Foreign patent applications are filed on selected inventions to extend market coverage for companies and may also be available for licensing.

ADDRESSES: Licensing information and copies of the U.S. patent applications listed below may be obtained by writing to the indicated licensing contact at the Office of Technology Transfer, National Institutes of Health, 6011 Executive Boulevard, Suite 325, Rockville, Maryland 20852–3804; telephone: 301/496–7057; fax: 301/402–0220. A signed Confidential Disclosure Agreement will be required to receive copies of the patent applications.

Neutralization of Hepatitis C Virus (HCV)

Description of Technology: Available for licensing and commercial development are anti-hepatitis C virus (HCV) vaccines, therapeutics and inhibitors. The invention is based on mapping studies conducted by the inventors of two epitopes within HCV E2: epitope I and epitope II. It has been discovered that epitope I is involved in virus neutralization but that epitope II mediates antibody interference; probably an adaptation of the virus to obfuscate the immune system. The present invention provides compositions and methods for treating and or preventing HCV infection caused by HCV. The invention is directed to a HCV E2 polypeptide substitution of

amino acids LFY of the skein LFY in epitope II. In certain embodiments, the invention is directed to a HCV E2 polypeptide deletion of amino acids LFY of the skein LFY in epitope II. In additional embodiments, the invention is directed to a HCV E2 polypeptide addition of amino acids between LFY of the skein LFY in epitope II. The above are directed to attenuating or disabling the interference effect of HCV-E2 epitope II.

In additional embodiments, the invention is directed to use of epitope II as a molecular decoyant. In further embodiments, the invention is directed to use of epitope II to affinity purify an immune globulin to deplete interfering antibodies from and enrich neutralizing antibodies in the preparation.

Applications: Antiviral; Hepatitis C Virus (HCV) therapy.

Inventors: Pei Zhang, Marian Major, Stephen Feinstone (FDA).

Publications:

1. P Zhang et al. Hepatitis C virus epitope-specific neutralizing antibodies in Igs prepared from human plasma. Proc Natl Acad Sci USA. 2007 May 15;104(20):8449–8454.

2. MY Yu et al. Neutralizing antibodies to hepatitis C virus (HCV) in immune globulins derived from anti-HCV-positive plasma. Proc Natl Acad Sci USA. 2004 May 18;101(20):7705–7710.

Patent Status: U.S. Provisional Application No. 61/002,031 filed 06 Nov 2007 (HHS Reference No. E–276–2007/0–US–01).

Licensing Status: Available for licensing.

Licensing Contact: RC Tang, JD, LLM; 301–435–5031; *tangrc@mail.nih.gov.*

Collaborative Research Opportunity: The FDA Center for Biologics Evaluation and Research, Laboratory of Plasma Derivatives, is seeking statements of capability or interest from parties interested in collaborative research to further develop, evaluate, or commercialize this technology. Please contact Michelle Hawley at 301–827–1991 or *michelle.hawley@fda.hhs.gov* for more information.

Treatment of Skin Conditions Using DKK1

Description of Technology: This invention discloses a method for inducing non-palmoplantar skin (skin of the trunk, arms, and face etc.) to develop characteristics of palmoplantar skin (skin of the soles and palms). This effect is achieved by use of Dickkopf 1 (DKK1), a protein which is highly expressed by palmoplantar fibroblasts and is a known antagonist of the Wnt signaling pathway. Topical application of DKK1 to non-palmoplantar skin induces the development of increased skin thickness, decreased pigmentation, and decreased hair growth. These characteristics are desirable for treating several dermatological conditions.

The skin thickening caused by topical application of DKK1 can be useful for skin grafts, and skin ulcers or abrasions. Decreased skin pigmentation, experimentally achieved by either topical or in vitro application of DKK1, may be desirable for conditions such as uneven skin pigmentation, pigmented birthmarks, or post inflammatory pigmentation. Suppressed hair growth may be cosmetically desirable for some areas of the skin, and in conditions such hypertrichosis, adrenal hyperplasia, or polycystic ovarian syndrome. DKK1 treatment may also be important for treating or preventing certain melanomas which involve hyperplastic or pre-malignant lesions.

Applications: Useful for skin grafts, skin ulcers, skin abrasions, fragrance dermatitis, vitiligo, etc.; Treatment of several conditions which require decreased skin pigmentation; Decreased hair growth for cosmetic or therapeutic purposes.

Development Status: Early stage.

Inventors: Vincent J. Hearing et al. (NCI).

Publication: Y Yamaguchi, T Passeron, T Hoashi, H Watabe, F Rouzaud, K Yasumoto, T Hara, C Tohyama, I Katayama, T Miki, VJ Hearing. Dickkopf 1 (DKK1) regulates skin pigmentation and thickness by affecting Wnt/β-catenin signaling in keratinocytes. FASEB J. 2008 Apr;22(4):1009–1020.

Patent Status:

U.S. Provisional Application No. 60/873,874 filed 07 Dec 2006 (HHS Reference No. E–321–2006/0–US–01).

PCT Application No. PCT/US2007/086855 filed 07 Dec 2007 (HHS Reference No. E–321–2006/0–PCT–02).

Licensing Status: Available for exclusive or non-exclusive licensing.

Licensing Contact: Jasbir (Jesse) S. Kindra, J.D., M.S.; 301–435–5170; *kindraj@mail.nih.gov.*

Collaborative Research Opportunity: The National Cancer Institute Laboratory of Cell Biology is seeking statements of capability or interest from parties interested in collaborative research to further develop, evaluate, or commercialize the use of DKK1 or a bioactive fragment of DKK1 to treat abnormal pigmentation of the skin or to regulate hair growth. Please contact John D. Hewes, Ph.D. at 301–435–3121 or *hewesj@mail.nih.gov* for more information.

Flow-Through Thermal-Expansion-Compensated Microcells for Analytical Transmission Infrared Spectroscopy

Description of Technology: Available for licensing and commercial distribution are optical cells spectroscopically stable and can be used for spectroscopic measurement in transmission, sample reflection, back plate reflection, emission, or scattering modes. The cell allows fluid in a sample space to be exchanged without separating a front or a back plate from a spacer, allows a solid sample to be placed in or removed from the sample space, requires only a small amount of sample, and allows for different sample gaps to be easily and inexpensively set. Alternatively, the spacers can be manufactured using a hydrocarbon-resistant polymer so that samples dissolved in organic solvents can be used without the risk of changing the spectral properties of the microcell and solvent leakage from the sample space. The inventive cell and methods allow spectral measurements to be taken over wavelengths ranging at least from the mid-infrared to the vacuum ultraviolet, provide a simple path for light traveling through a sample, and allow fast kinetic processes to be detected and monitored reproducibly and sensitively.

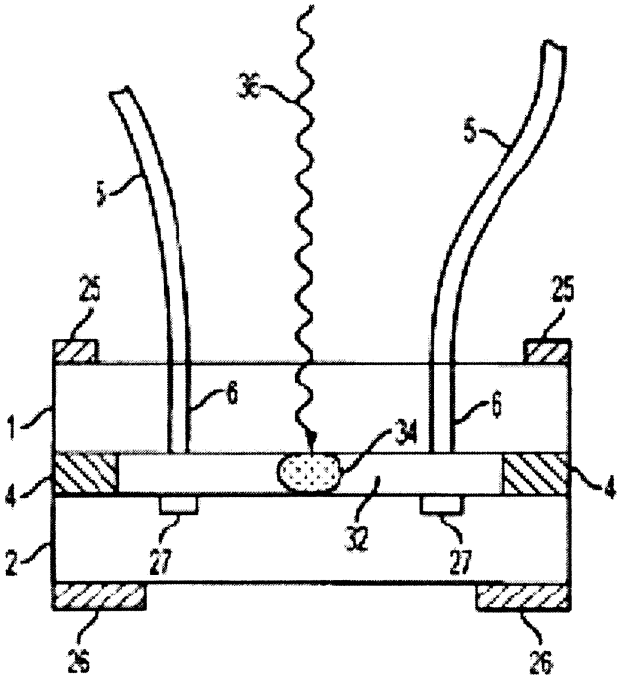

Applications: Analytics; Spectroscopy; Infrared spectroscopy; Chemical Imaging; Material characterization; Quality control; Chemometrics in chemical and pharmaceutical manufacturing; Forensic applications; Tissue pathology diagnostics

Inventors: Edward Mertz and James Sullivan (NICHD).

Publications:

1. Makareeva E, Mertz EL, Kuznetsova NV, Sutter MB, DeRidder AM, Cabral WA, Barnes AM, McBride DJ, Marini JC, Leikin S. Structural heterogeneity of type I collagen triple helix and its role in osteogenesis imperfecta. J Biol Chem. 2008 Feb 22;283(8):4787–4798.
2. Mertz EL, Leikin S. Interactions of inorganic phosphate and sulfate anions with collagen. Biochemistry. 2004 Nov 30;43(47):14901–14912.

Patent Status:

U.S. Patent 7,355,697 issued 08 Apr 2008 (HHS Reference No. E–096–2004/0–US–01).

International Patent Application No. PCT/US2005/030218 filed 25 Aug 2005, which published as WO 2006/026342 on 09 Mar 2006 (HHS Reference No. E–096–2004/0–PCT–02).

European Patent Application 05786373.9 filed 26 Aug 2005 (HHS Reference No. E–096–2004/0–EP–03).

U.S. Patent Application No. 11/826,806 filed 18 Jul 2007 (HHS Reference No. E–096–2004/1–US–01).

Licensing Status: Available for non-exclusive or exclusive licensing.

Licensing Contact: Michael A. Shmilovich, Esq.; 301–435–5019; *shmilovm@mail.nih.gov.*

Collaborative Research Opportunity: The Eunice Kennedy Shriver National Institute of Child Health and Human Development, Section on Physical Biochemistry is seeking statements of capability or interest from parties interested in collaborative research to further develop, evaluate, or commercialize microcells for infrared and other spectroscopies and their applications to pathology diagnostics. Please contact John D. Hewes, PhD at 301–435–3121 or *hewesj@mail.nih.gov* for more information.

Rapid and Sensitive Detection of Nucleic Acid Sequence Variations

Description of Technology: The ability to easily detect small mutations in nucleic acids, such as single base substitutions, can provide a powerful tool for use in cancer detection, perinatal screens for inherited diseases, and analysis of genetic polymorphisms such as genetic mapping or for identification purposes. Current approaches make use of the mismatch that occurs between complimentary strands of DNA when there is a genetic mutation, the electrophoretic mobility differences caused by small sequence changes, and chemicals or enzymes that can cleave heteroduplex sites. Some of these methods, however, prove to be too cumbersome, are unable to pinpoint mutations, only detect a subset of mutations, or involve the use of hazardous materials.

The current invention takes advantage of the ability of transposons, or mobile genetic elements, to move from one part of the genome to another by the cleavage and joining of their sequences into the target site; a reaction facilitated by a transposase enzyme. The phage Mu transposase is capable of inserting the right end sequence of the Mu transposon into any DNA sequence both *in vitro* and *in vivo.* The surprising discovery that the Mu transposase displays a strong preference for inserting Mu-end DNA into mismatched sites, the very sites which occur when DNA is mutated and paired with its complementary strand that does not have the corresponding mutation, makes it a powerful tool for detecting variations in nucleic acid sequences. In this system, the transposition of Mu-end DNA at a site is used to indicate the presence of a nucleic acid mismatch or mutation at that site. The invention can be used with labeled Mu-end DNA to further facilitate the precise mapping of the mutations. This specificity allows Mu to detect even single base mutations among a large quantity of non-specific DNA. The Mu detection system is simple, rapid, and highly sensitive compared to current methods and can find a broad range of use in genetic research and the diagnosis of several diseases such as cystic fibrosis, spinal and bulbar muscular dystrophy, human fragile-X syndrome, and Huntington's disease.

Applications:

Fast, simple screening for genetic mutations in several diseases such as cystic fibrosis, spinal and bulbar muscular dystrophy, human fragile-X syndrome, Huntington's disease,

detection of birth defects, and paternity testing, etc.

Genetic mapping and identification.

Development Status: Early stage.

Inventors: Katsuhiko Yanagihara and Kiyoshi Mizuuchi (NIDDK).

Publication: Yanagihara K and Mizuuchi K. Mismatch-targeted transposition of Mu: a new strategy to map genetic polymorphism. Proc Natl Acad Sci USA. 2002 Aug 20; 99(17):11317–11321.

Patent Status: U.S. Patent No. 7,316,903 issued 08 Jan 2008 (HHS Reference No. E–071–2003/0–US–02).

Licensing Status: Available for exclusive or non-exclusive licensing.

Licensing Contact: Jasbir (Jesse) S. Kindra, JD, MS; 301–435–5170; *kindraj@mail.nih.gov.*

Collaborative Research Opportunity: The Section on Genetic Mechanisms, LMB, NIDDK is seeking statements of capability or interest from parties interested in collaborative research to further develop, evaluate, or commercialize Mu transposition system as a tool for mutation detection and other genetic research/manipulation. Please contact Kiyoshi Mizuuchi at *kmizu@helix.nih.gov* for more information.

Dated: July 8, 2008.

Richard U. Rodriguez,

Director, Division of Technology Development and Transfer, Office of Technology Transfer, National Institutes of Health.

[FR Doc. E8–16134 Filed 7–14–08; 8:45 am]

BILLING CODE 4140–01–P

DEPARTMENT OF HEALTH AND HUMAN SERVICES

National Institutes of Health

National Cancer Institute; Notice of Closed Meeting

Pursuant to section 10(d) of the Federal Advisory Committee Act, as amended (5 U.S.C. Appendix 2), notice is hereby given of the following meeting.

The meeting will be closed to the public in accordance with the provisions set forth in sections 552b(c)(4) and 552b(c)(6), Title 5 U.S.C., as amended. The grant applications and the discussions could disclose confidential trade secrets or commercial property such as patentable material, and personal information concerning individuals associated with the grant applications, the disclosure of which would constitute a clearly unwarranted invasion of personal privacy.

Name of Committee: National Cancer Institute Initial Review Group; Subcommittee A—Cancer Centers.

Date: August 7–8, 2008.

Time: 8 a.m. to 3 p.m.

Agenda: To review and evaluate grant applications.

Place: Doubletree Hotel Bethesda, 8120 Wisconsin Ave, Bethesda, MD 20814.

Contact Person: Gail J. Bryant, MD, Scientific Review Officer, Resources and Training Review Branch, Division of Extramural Activities, National Cancer Institute, 6116 Executive Blvd, Room 8107, MSC 8328, Bethesda, MD 20892–8328, (301) 402–0801, *gb30t@nih.gov.*

(Catalogue of Federal Domestic Assistance Program Nos. 93.392, Cancer Construction; 93.393, Cancer Cause and Prevention Research; 93.394, Cancer Detection and Diagnosis Research; 93.395, Cancer Treatment Research; 93.396, Cancer Biology Research; 93.397, Cancer Centers Support; 93.398, Cancer Research Manpower; 93.399, Cancer Control, National Institutes of Health, HHS)

Dated: July 9, 2008.

Jennifer Spaeth,

Director, Office of Federal Advisory Committee Policy.

[FR Doc. E8–16139 Filed 7–14–08; 8:45 am]

BILLING CODE 4140–01–P

DEPARTMENT OF HOMELAND SECURITY

National Protection and Programs Directorate; Submission for Review: TRIPWire User Registration 1670–NEW

AGENCY: National Protection and Programs Directorate, Infrastructure Protection, DHS.

ACTION: 60-Day Notice and request for comments.

SUMMARY: The Department of Homeland Security (DHS) invites the general public and other federal agencies to comment on new information collection request 1670–NEW, TRIPWire User Registration. As required by the Paperwork Reduction Act of 1995, (Pub. L. 104–13, 44 U.S.C. chapter 35) as amended by the Clinger-Cohen Act (Pub. L. 104–106), DHS is soliciting comments for this collection.

DATES: Comments are encouraged and will be accepted until September 15, 2008. This process is conducted in accordance with 5 CFR 1320.1.

ADDRESSES: Interested persons are invited to submit written comments on the proposed information collection to Department of Homeland Security, Attn: IP/PSCD/Charlie Payne, Mail Stop 8540, 245 Murray Lane, SW., Washington, DC 20528–8540, or e-mail *obp@dhs.gov.*

FOR FURTHER INFORMATION CONTACT: Department of Homeland Security, Attn: IP/PSCD/Charlie Payne, Mail Stop 8540, 245 Murray Lane, SW., Washington, DC 20528–8540, or e-mail *obp@dhs.gov.*

SUPPLEMENTARY INFORMATION: The Office of Management and Budget is particularly interested in comments that:

1. Evaluate whether the proposed collection of information is necessary for the proper performance of the functions of the agency, including whether the information will have practical utility;
2. Evaluate the accuracy of the agency's estimate of the burden of the proposed collection of information, including the validity of the methodology and assumptions used;
3. Enhance the quality, utility, and clarity of the information to be collected; and
4. Minimize the burden of the collection of information on those who are to respond, including through the use of appropriate automated, electronic, mechanical, or other technological collection techniques or other forms of information technology, *e.g.*, permitting electronic submission of responses.

Analysis

Agency: Department of Homeland Security, National Protection and Programs Directorate, Infrastructure Protection.

Title: TRIPWire User Registration.

OMB Number: 1670–NEW.

Frequency: Once.

Affected Public: Federal, State, Local, Tribal.

Number of Respondents: 5000.

Estimated Time Per Respondent: 10 minutes.

Total Burden Hours: 834 hours.

Total Burden Cost (capital/startup): None.

Total Burden Cost (operating/maintaining): None.

Description: The Technical Resource for Incident Prevention (TRIPWire) is DHS's online, collaborative, information-sharing network for bomb squad, law enforcement, and other emergency services personnel to learn about current terrorist improvised explosive device (IED) tactics, techniques, and procedures, including design and emplacement considerations. Developed and maintained by the DHS Office for Bombing Prevention (OBP), the system combines expert analyses and reports with relevant documents, images, and videos gathered directly from terrorist sources to assist law enforcement to anticipate, identify, and prevent IED incidents. The TRIPWire portal contains sensitive information related to terrorist use of explosives and therefore user information is needed to verify eligibility and access to the system.

Dated: July 9, 2008.

John Campbell,

Acting Chief Information Officer, National Protection and Programs Directorate, Department of Homeland Security.

[FR Doc. E8–16166 Filed 7–14–08; 8:45 am]

BILLING CODE 4410–10–P

DEPARTMENT OF HOMELAND SECURITY

Office of the Secretary

Published Privacy Impact Assessments on the Web

AGENCY: Privacy Office, DHS.

ACTION: Notice of Publication of Privacy Impact Assessments.

SUMMARY: The Privacy Office of the Department of Homeland Security (DHS) is making available sixteen (16) Privacy Impact Assessments on various programs and systems in the Department. These assessments were approved and published on the Privacy Office's Web site between January 1 and March 31, 2008.

DATES: The Privacy Impact Assessments will be available on the DHS Web site until September 15, 2008, after which they may be obtained by contacting the DHS Privacy Office (contact information below).

FOR FURTHER INFORMATION CONTACT: Hugo Teufel III, Chief Privacy Officer, Department of Homeland Security, Mail Stop 0550, Washington, DC 20528, or e-mail: *pia@dhs.gov*.

SUPPLEMENTARY INFORMATION: Between January 1 and March 31, 2008, the Chief Privacy Officer of the Department of Homeland Security (DHS) approved and published sixteen (16) Privacy Impact Assessments (PIAs) on the DHS Privacy Office Web site, *http://www.dhs.gov/privacy*, under the link for ''Privacy Impact Assessments.'' These PIAs cover sixteen (16) separate DHS programs. Below is a short summary of those programs, indicating the DHS component responsible for the system, and the date on which the PIA was approved. Additional information can be found on the Web site or by contacting the Privacy Office.

System: Whole Body Imaging.

Component: Transportation Security Administration.

Date of approval: January 2, 2008.

The Transportation Security Administration (TSA) is conducting pilot operations to evaluate the use of various Whole Body Imaging (WBI) technologies, including backscatter x-ray and millimeter wave devices, to detect threat objects carried on persons entering airport sterile areas. WBI creates an image of the full body, showing the surface of the skin and revealing objects that are on the body, not in the body. To mitigate the privacy risk associated with creating an image of the individual's body, TSA isolates the Transportation Security Officer (TSO) viewing the image from the TSO interacting with the individual. During the initial phase of the pilot, individuals who must undergo secondary screening will be given the option of undergoing the normal secondary screening technique involving a physical pat down by a TSO or a screening by a WBI device. A subsequent phase will evaluate WBI technology for individuals undergoing primary screening. Individuals will be able to choose to undergo WBI screening in primary.

System: Federal Flight Deck Officer Program.

Component: Transportation Security Administration.

Date of approval: January 10, 2008.

The Federal Flight Deck Officer program was established by the Arming Pilots Against Terrorism Act as Title XIV of the Homeland Security Act (Pub. L. 107–296, Nov. 25, 2003, 116 Stat. 2300), codified at 49 U.S.C. 44921. Under this program, TSA deputizes qualified volunteer pilots and flight crewmembers of passenger and cargo aircraft as law enforcement officers to defend the flight deck of aircraft against acts of criminal violence or air piracy. Participants in the program, known as Federal Flight Deck Officers (FFDOs), are trained and authorized to transport and carry a firearm and to use force, including deadly force. Through this program, TSA collects data on pilots to assess the qualification and suitability of prospective and current FFDOs through an online application, and to administer the program.

System: The Department of Homeland Security REAL–ID Final Rule.

Component: DHS-Wide.

Date of approval: January 11, 2008.

DHS issued a final rule establishing minimum standards for State-issued driver's licenses and identification cards that Federal agencies will accept for official purposes after May 11, 2008, in accordance with the REAL–ID Act of 2005, Pub. L. 109–13, 119 Stat. 231, 302 (2005) (codified at 49 U.S.C. 30301 note) (the Act). The final rule establishes standards to meet the minimum requirements of the Act including: Information and security features that must be incorporated into each card; application information to establish the identity and lawful status of an applicant before a card can be issued; and physical security standards for locations issuing driver's licenses and identification cards.

System: Personnel Security Activities Management System/Integrated Security Management System Update.

Component: DHS-Wide.

Date of approval: January 15, 2008.

The DHS Office of Security uses the Integrated Security Management System (ISMS) to automate the tracking of Personnel Security related activities at DHS headquarters and component sites. ISMS is an update system to the Personnel Security Activities Management System (PSAMS). ISMS will help manage DHS personnel and security case records by adding to the existing functionality of PSAMS.

System: USCIS Person Centric Query Service Supporting the Verification Information System.

Component: U.S. Citizenship and Immigration Services.

Date of approval: January 18, 2008.

This is an update to the PIA for the USCIS Person Centric Query (PCQ) Service, operating through the USCIS Enterprise Service Bus (ESB) to describe the privacy impact of expanding the PCQ Service to include the following additional PCQ Client: The National Security and Records Verification Directorate/Verification Division's VIS.

System: USCIS Person Centric Query Service Supporting Immigration Status Verifiers of the USCIS National Security and Records Verification Directorate/Verification Division.

Component: U.S. Citizenship and Immigration Services.

Date of approval: January 18, 2008.

This is an update to the PIA for the USCIS PCQ Service, operating through the USCIS ESB to describe the privacy impact of expanding the PCQ Service to include the following additional PCQ Client: The Immigrant Status Verifiers of the USCIS National Security and Records Verification Directorate/Verification Division.

System: Use of Radio Frequency Identification (RFID) Technology for Border Crossings.

Component: Customs and Border Protection.

Date of approval: January 22, 2008.

U.S. Customs and Border Protection (CBP) employs Radio Frequency Identification (RFID) Technology that is to be used in cross-border travel documents to facilitate the land border primary inspection process. A unique number is embedded in an RFID tag which, in turn, is embedded in each cross-border travel document. At the border, the unique number is read wirelessly by CBP and then forwarded through a secured data circuit to back-end computer systems. The back-end

systems use the unique number to retrieve personally identifiable information (PII) about the traveler. This information is sent to the CBP Officer to assist in the authentication of the identity of the traveler and to facilitate the land border primary inspection process. Multiple border crossing programs use or plan to take advantage of CBP's vicinity RFID-reader enabled border crossing functionality including CBP's own trusted traveler programs, the pending Department of State's Passport Card, the Mexican Border Crossing Card, the proposed Enhanced Driver's License offered by various states, tribal enrollment cards that could be developed by various Native American Tribes, and the proposed Enhanced Driver's Licenses being developed within the various provincial authorities in Canada.

System: ICE Pattern Analysis and Information Collection (ICEPIC).

Component: Immigration and Customs Enforcement.

Date of approval: January 30, 2008.

U.S. Immigration and Customs Enforcement (ICE) has established a system called the ICE Pattern Analysis and Information Collection (ICEPIC) system. ICEPIC is a toolset that assists ICE law enforcement agents and analysts in identifying suspect identities and discovering possible non-obvious relationships among individuals and organizations that are indicative of violations of the customs and immigration laws as well as possible terrorist threats and plots. All ICEPIC activity is predicated on ongoing law enforcement investigations. This PIA is being completed to provide additional notice of the existence of the ICEPIC system and publicly document the privacy protections that are in place for the ICEPIC system.

System: Office of Inspector General Investigative Records.

Component: Office of Inspector General.

Date of approval: January 30, 2008.

DHS Office of Inspector General (OIG) Investigative Records System includes both paper investigative files and the ''Investigations Data Management System'' (IDMS)—an electronic case management and tracking information system, which also generates reports. OIG uses IDMS to manage information relating to DHS OIG investigations of alleged criminal, civil, or administrative violations relating to DHS employees, contractors and other individuals and entities associated with the DHS. This PIA is being conducted to assess the privacy impact of the OIG Investigative Records system that includes both paper investigative files and the IDMS.

System: Crew Member Self Defense Training (CMSDT) Program.

Component: Transportation Security Administration.

Date of approval: February 6, 2008.

DHS TSA has developed the Crew Member Self-Defense Training Program (CMSDT), a voluntary self-defense training course, for air carrier crew members. TSA will collect name, last four (4) numerals of the Social Security Number, contact information, employer information including employee identification number, and course location preferences in order to verify a crew member's eligibility for the program and to provide the self-defense training. Because the CMSDT collects PII on members of the public, TSA is conducting this PIA in accordance with the statutory requirements of the E-Government Act of 2002.

System: Science and Technology's Experimental Testing of Project Hostile Intent Technology.

Component: Science and Technology.

Date of approval: February 25, 2008.

Project Hostile Intent (PHI) is a research effort by the Science and Technology Directorate to ascertain whether screening technology can aid DHS screeners in making better decisions by supplementing the current screening process (wherein a human screener evaluates an individual's behavior) with training and computers. This PIA addresses privacy impacts of this program, and specifically, the temporary storage of video images during field tests of PHI's performance with real behavioral data to ensure that it is effective in a ''real world'' environment.

System: Protected Repository for the Defense of Infrastructure Against Cyber Threats.

Component: Science and Technology.

Date of approval: February 25, 2008.

The Science & Technology Directorate's Protected Repository for the Defense of Infrastructure Against Cyber Threats (PREDICT) system is a repository of test datasets of Internet traffic data that is made available to approved researchers and managed by an outside contractor serving as the PREDICT Coordination Center. The goal of PREDICT is to create a national research and development resource to bridge the gap between (a) the producers of security-relevant network operations data and (b) technology developers and evaluators who can use this data to accelerate the design, production, and evaluation of next-generation cyber security solutions, including commercial products. A key motivation of PREDICT is to make these data sources more widely available to technology developers and evaluators, who are currently forced to base the efficacy of their technical solutions on old, irrelevant traffic data, anecdotal evidence, or small-scale test experiments, rather than on more comprehensive, real-world data analysis.

System: USCIS Verification Information System Supporting Verification Programs.

Component: U.S. Citizenship and Immigration Services.

Date of approval: February 28, 2008.

The Verification Division of the U.S. Citizenship and Immigration Services (USCIS) operates the Verification Information System (VIS). VIS is a composite information system incorporating data from various DHS databases. It is the underlying information technology that provides immigration status verification for (1) benefits determinations through the Systematic Alien Verification for Entitlements (SAVE) program for government benefits and (2) verification of employment authorization for newly hired employees through the E-Verify program. USCIS is conducting this PIA to clarify previous VIS PIAs and to describe updates to VIS that will improve the ability of USCIS to verify citizenship and immigration status information to users of SAVE and E-Verify.

System: DHS Enterprise e-Recruitment System.

Component: DHS Wide.

Date of approval: March 4, 2008.

Office of the Chief Human Capital Officer (OCHCO) implemented an enterprise e-Recruitment system for DHS. The use of an automated recruitment solution is necessary to meet mission critical needs of DHS and comply with the 45-day hiring model under the President's Management Agenda. OCHCO has conducted this PIA because e-Recruitment will use and maintain PII.

System: United States Coast Guard ''Biometrics at Sea''.

Component: United States Coast Guard.

Date of approval: March 14, 2008.

This PIA describes the expansion of the existing U.S. Coast Guard (USCG) and U.S. Visitor and Immigrant Status Indicator Technology (US–VISIT) Program partnership to provide mobile biometrics collection and analysis capability at sea, along with other remote areas where DHS operates. As a result of the success of this partnership's USCG Mona Pass Proof of Concept, the USCG plans a measured expansion of at-sea biometric capability throughout its mission scope and areas

of operation. This measured expansion of biometrics at sea will assist in the prosecution of persons engaged in such activities as illegal maritime migration, smuggling, illegal drug transportation, and other types illegal maritime activity. By deterring unsafe and illegal maritime migration and other illegal activities at sea, the use of biometrics will promote an important USCG mission, in particular the preservation of life at sea and the enforcement of U.S. law.

System: Western Hemisphere Travel Initiative Land and Sea Final Rule.

Component: Customs and Border Protection.

Date of approval: March 24, 2008.

DHS and CBP, in conjunction with the Bureau of Consular Affairs at the Department of State, published in the **Federal Register** a final rule to notify the public of how they will implement the Western Hemisphere Travel Initiative (WHTI) for sea and land ports of entry. The final rule removes the current regulatory exceptions to the passport requirement provided under sections 212(d)(4)(B) and 215(b) of the Immigration and Nationality Act. On August 9, 2007, the DHS Privacy Office issued a PIA for the proposed rule, which was published in the **Federal Register** on June 26, 2007, at 72 FR 35088. This PIA updates the earlier PIA for the proposed rule to reflect changes in the WHTI final rule for land and sea ports-of-entry.

Hugo Teufel III,

Chief Privacy Officer, Department of Homeland Security.

[FR Doc. E8–16044 Filed 7–14–08; 8:45 am]

BILLING CODE 4410–10–P

DEPARTMENT OF HOMELAND SECURITY

Office of the Secretary

Published Privacy Impact Assessments on the Web

AGENCY: Privacy Office, DHS.

ACTION: Notice of Publication of Privacy Impact Assessments.

SUMMARY: The Privacy Office of the Department of Homeland Security (DHS) is making available ten (10) Privacy Impact Assessments on various programs and systems in the Department. These assessments were approved and published on the Privacy Office's Web site between October 1, 2007, and December 31, 2007.

DATES: The Privacy Impact Assessments will be available on the DHS Web site until September 15, 2008, after which they may be obtained by contacting the DHS Privacy Office (contact information below).

FOR FURTHER INFORMATION CONTACT: Hugo Teufel III, Chief Privacy Officer, Department of Homeland Security, Mail Stop 0550, Washington, DC 20528, or e-mail: *pia@dhs.gov*.

SUPPLEMENTARY INFORMATION: Between October 1 and December 31, 2007, the Chief Privacy Officer of the Department of Homeland Security (DHS) approved and published ten (10) Privacy Impact Assessments (PIAs) on the DHS Privacy Office Web site, *http://www.dhs.gov/privacy*, under the link for ''Privacy Impact Assessments.'' These PIAs cover ten (10) separate DHS programs. Below is a short summary of those programs, indicating the DHS component responsible for the system, and the date on which the PIA was approved. Additional information can be found on the Web site or by contacting the Privacy Office.

System: Transportation Worker Identification Credential Program Final Rule.

Component: Transportation Security Administration.

Date of approval: October 5, 2007.

The Transportation Security Administration (TSA) published a joint Final Rule with the United States Coast Guard to implement a Transportation Worker Identification Credential (TWIC) program to provide a biometric credential that can be used to confirm the identity of workers in the national transportation system, and conducted a PIA associated with that Final Rule. TSA is amending the PIA to reflect the development of TWIC contactless card capability in sections 1.4, 1.6, 9.2 and 9.3, and the approval of the records schedule by NARA in section 3. This PIA replaces the one published December 29, 2006.

System: Universal Commercial Driver's License (CDL) Security Threat Assessment.

Component: Transportation Security Administration.

Date of approval: October 12, 2007.

TSA conducts security threat assessments on Commercial Driver's License (CDL) holders. CDL holders are licensed to operate large commercial motor vehicles that potentially pose threats to transportation security. Congress directed TSA to perform threat assessments on certain CDL holders in the SAFE PORT Act Pub. L. No. 109–347, 120 Stat. 1884 (2006). Since the potential threat extends beyond ports, TSA will perform security threat assessments on all CDL holders pursuant to its authority under 49 U.S.C. 14(f) which gives TSA broad authority ''to assess threats to transportation'' including vetting persons who could pose a threat to transportation.

System: Visitor Management System.

Component: Transportation Security Administration.

Date of approval: October 19, 2007.

The PIA previously published on July 14, 2006, has been amended to reflect the collection of a photograph to be placed on the temporary badge. The photograph will be stored in the system only for so long as is required to create the badge, then is deleted to create the next badge. This PIA replaces the previously published PIA.

System: Airmen Certificate Vetting Program.

Component: Transportation Security Administration.

Date of approval: October 22, 2007.

TSA implemented a process to conduct security threat assessments on all Federal Aviation Administration (FAA) Airmen Certificate applicants and holders to ensure that the individual does not pose or is not suspected of posing a threat to transportation or national security. FAA Airmen Certificate holders include pilots, air crews, and others required to hold a certificate pursuant to FAA regulations. Because this program entails a new collection of information by TSA about members of the public in an identifiable form, the E-Government Act of 2002 and the Homeland Security Act of 2002 require that the TSA issue a PIA. The data collected and maintained for this program and the details and uses of this information are outlined in this PIA.

System: DHS/UKvisas Project.

Component: U.S. Citizenship and Immigration Services.

Date of approval: November 14, 2007.

Recently the United Kingdom (UK) enacted legislation requiring the submission of biometric data by almost all individuals filing applications for UK visas. Officials from the UK and DHS have agreed that individuals who are physically located in the United States (US) may provide the requisite biometrics and limited biographical information at U.S. Citizenship and Immigration Services (USCIS) Application Support Centers (ASCs) for forward transfer to the UK in support of the adjudication of applications for visas. USCIS will temporarily retain the submitted biometric and biographical records until the UK provides confirmation that the transfer of data was successful. USCIS will delete the biometric and biographical records immediately after it receives that confirmation.

System: Conversion to 10-Fingerprint Collection for the United States Visitor and Immigrant Status Indicator Technology Program.

Component: US–VISIT.

Date of approval: November 15, 2007.

US–VISIT is an office and program within the National Protection and Programs Directorate of DHS. The office manages DHS' IDENT system and provides biometrics-based identity management services to agencies throughout immigration and border management, law enforcement, and intelligence communities. The Program provides an integrated, automated, biometric entry and exit system that records the arrival and departure of foreign nationals. US–VISIT published this PIA to update and describe the US–VISIT Program's change from collecting two (2) fingerprints to collecting up to ten (10) fingerprints (using inkless optical reading devices) from foreign nationals upon entering or exiting the United States.

System: National Infrastructure Coordinating Center INSight Application.

Component: National Protection and Programs Directorate.

Date of approval: November 23, 2007.

The National Infrastructure Coordinating Center (hereafter refer to as the NICC), part of the National Operations Center (NOC) in the Operations Directorate, operates the INSight Information Management System (INSight), designed to support the identification of potentially significant changes in the operational status of the nation's Critical Infrastructures and Key Resources so that trained analysts can provide timely coordination with the NOC, respective Information Sharing and Analysis Centers, and other involved agencies in the public sector and federal sectors. INSight may collect personally identifiable information (PII) associated with infrastructure information; accordingly NICC has conducted this PIA.

System: Boarding Pass Scanning System.

Component: Transportation Security Administration.

Date of approval: November 29, 2007.

The Boarding Pass Scanning System (BPSS) is a process and technology that validates the authenticity of the boarding pass at the TSA security checkpoint using 2-dimensional (2D) bar code readers and encryption techniques. The BPSS will display machine readable data from the boarding pass for confirmation against the human readable portions of the boarding pass to verify that the boarding pass is legitimate and has not been tampered with. Once confirmed, the displayed data will be deleted from the BPSS.

System: Enterprise Correspondence Tracking System (ECT).

Component: Department Wide.

Date of approval: December 3, 2007.

The Executive Secretariat of DHS operates the Enterprise Correspondence Tracking (ECT) system. The ECT is a correspondence workflow management system that assists DHS in responding to inquiries from the public, other government agencies, and the private sector. Tens of thousands of pieces of correspondence ranging from official rulings, policy statements, testimony, or even thank you letters are processed annually by DHS. The Executive Secretariat conducted this privacy impact assessment because the ECT collects and uses PII.

System: DHSAccessGate System.

Component: Management.

Date of approval: December 3, 2007.

DHS added a new layer of security to its vendor employee access control procedures at certain facilities by offering a new and voluntary vendor program called the DHSAccessGate Program. Part of this program will involve the collection of PII from individuals who are not DHS employees or contractors. The DHS Office of Security has conducted this privacy impact assessment because of the collection of new PII.

Hugo Teufel III,

Chief Privacy Officer, Department of Homeland Security.

[FR Doc. E8–16045 Filed 7–14–08; 8:45 am]

BILLING CODE 4410–10–P

DEPARTMENT OF HOMELAND SECURITY

Federal Emergency Management Agency

[Docket ID: FEMA–2007–0008]

National Advisory Council Meeting

AGENCY: Federal Emergency Management Agency, DHS.

ACTION: Notice of Federal Advisory Committee Meeting.

SUMMARY: This notice announces the date, time, location, and agenda for the next meeting of the National Advisory Council (NAC). At the meeting, the subcommittees will be reporting back regarding their work since the May 14–15, 2008 meeting. This meeting will be open to the public.

DATES: *Meeting Dates:* Wednesday, August 13, 2008, from approximately 11 a.m. to 5 p.m. and Thursday, August 14, 2008, 9 a.m. to 4:30 p.m. A public comment period will take place on the afternoon of August 14, 2008, between approximately 2:30 p.m. and 3 p.m.

Comment Date: Written comments or requests to make oral presentations must be received by August 6, 2008.

ADDRESSES: The meeting will be held at the Grand Hyatt Washington, 1000 H St. NW., Washington, DC 20001. Persons wishing to make an oral presentation, or who are unable to attend or speak at the meeting, may submit written comments. Written comments and requests to make oral presentations at the meeting should be provided to the address listed in the **FOR FURTHER INFORMATION CONTACT** section and must be received by August 6, 2008. All submissions received must include the Docket ID FEMA–2007–0008 and may be submitted by any one of the following methods:

Federal Rulemaking Portal: http://www.regulations.gov. Follow instructions for submitting comments on the Web site.

E-mail: FEMA–RULES@dhs.gov. Include Docket ID FEMA–2007–0008 in the subject line of the message.

Facsimile: (866) 466–5370.

Mail: Office of Chief Counsel, Federal Emergency Management Agency, Room 835, 500 C Street, SW., Washington, DC 20472.

Hand Delivery/Courier: Office of the Chief Counsel, Federal Emergency Management Agency, Room 835, 500 C Street, SW., Washington, DC 20472.

Instructions: All submissions received must include the Docket ID FEMA–2007–0008. Comments received will also be posted without alteration at *http://www.regulations.gov,* including any personal information provided.

Docket: For access to the docket to read background documents or comments received by the National Advisory Council, go to *http://www.regulations.gov.*

FOR FURTHER INFORMATION CONTACT: Alyson Price, Designated Federal Officer, Federal Emergency Management Agency, 500 C Street, SW., Washington, DC 20472, telephone 202–646–3746, fax 202–646–3061, and e-mail *FEMA–NAC@dhs.gov* or *Jennifer.Veal@associates.dhs.gov.* The NAC's Web site is located at: *http://www.fema.gov/about/nac/.*

SUPPLEMENTARY INFORMATION: Notice of this meeting is given under the Federal Advisory Committee Act (FACA), Public Law 92–463, as amended (5 U.S.C. App. 1 *et seq.*). The National Advisory Council (NAC) will meet for the purpose of reviewing the progress of the NAC subcommittees, to receive an update on

the Regional Advisory Councils, transition issues, and other matters.

Public Attendance: The meeting is open to the public. Please note that the meeting may close early, if all business is finished. Persons with disabilities who require special assistance should advise the Designated Federal Officer of their anticipated special needs as early as possible. Members of the public who wish to make comments on Thursday, August 14, 2008 between 2:30 p.m. and 3 p.m. are requested to register in advance, and must be present and seated by 1:30 pm. In order to allow as many people as possible to speak, speakers are requested to limit their remarks to 3 minutes. For those wishing to submit written comments, please follow the procedure noted above.

Dated: July 7, 2008.

R. David Paulison,

Administrator, Federal Emergency Management Agency.

[FR Doc. E8–15978 Filed 7–14–08; 8:45 am]

BILLING CODE 9111–48–P

DEPARTMENT OF HOMELAND SECURITY

U.S. Citizenship and Immigration Services

Agency Information Collection Activities: Form I–192, Revision of a Currently Approved Information Collection; Comment Request

ACTION: 30-Day Notice of Information Collection Under Review: Form I–192, Application for Advance Permission to Enter as Nonimmigrant (Pursuant to 212(d)(3) of the Immigration and Nationality Act); OMB Control No. 1615–0017.

The Department of Homeland Security, U.S. Citizenship and Immigration Services (USCIS) has submitted the following information collection request to the Office of Management and Budget (OMB) for review and clearance in accordance with the Paperwork Reduction Act of 1995. The information collection was previously published in the **Federal Register** on March 10, 2008, at 73 FR 12750, allowing for a 60-day public comment period. USCIS did not receive any comments for this information collection.

The purpose of this notice is to allow an additional 30 days for public comments. Comments are encouraged and will be accepted until August 14, 2008. This process is conducted in accordance with 5 CFR 1320.10.

Written comments and/or suggestions regarding the item(s) contained in this notice, especially regarding the estimated public burden and associated response time, should be directed to the Department of Homeland Security (DHS), and to the Office of Information and Regulatory Affairs, Office of Management and Budget (OMB), USCIS Desk Officer. Comments may be submitted to: USCIS, Chief, Regulatory Management Division, Clearance Office, 111 Massachusetts Avenue, Suite 3008, Washington, DC 20529. Comments may also be submitted to DHS via facsimile to 202–272–8352 or via e-mail at *rfs.regs@dhs.gov*, and to the OMB USCIS Desk Officer via facsimile at 202–395–6974 or via e-mail at *oira_submission@omb.eop.gov*.

Written comments and suggestions from the public and affected agencies concerning the proposed collection of information should address one or more of the following four points:

(1) Evaluate whether the collection of information is necessary for the proper performance of the functions of the agency, including whether the information will have practical utility;

(2) Evaluate the accuracy of the agency's estimate of the burden of the collection of information, including the validity of the methodology and assumptions used;

(3) Enhance the quality, utility, and clarity of the information to be collected; and

(4) Minimize the burden of the collection of information on those who are to respond, including through the use of appropriate automated, electronic, mechanical, or other technological collection techniques, or other forms of information technology, *e.g.*, permitting electronic submission of responses.

Overview of This Information Collection

(1) *Type of Information Collection:* Revision of an existing information collection.

(2) *Title of the Form/Collection:* Application for Advance Permission to Enter as Nonimmigrant (Pursuant to 212(d)(3) of the Immigration and Nationality Act).

(3) *Agency form number, if any, and the applicable component of the Department of Homeland Security sponsoring the collection:* Form I–192. U.S. Citizenship and Immigration Services.

(4) *Affected public who will be asked or required to respond, as well as a brief abstract: Primary:* Individuals and households. The information furnished on Form I–192 will be used to determine if the applicant is eligible to enter the U.S. temporarily under the provisions of section 212(d)(3) of the Immigration and Nationality Act.

(5) *An estimate of the total number of respondents and the amount of time estimated for an average respondent to respond:* 17,000 responses at 30 minutes (.50 hours) per response.

(6) *An estimate of the total public burden (in hours) associated with the collection:* 8,500 annual burden hours.

If you have additional comments, suggestions, or need a copy of the proposed information collection instrument with instructions, or additional information, please visit the USCIS Web site at: *http://www.regulations.gov/search/index.jsp.*

If additional information is required contact: USCIS, Regulatory Management Division, 111 Massachusetts Avenue, Suite 3008, Washington, DC 20529, (202) 272–8377.

Dated: July 9, 2008.

Stephen Tarragon,

Acting Chief, Regulatory Management Division, U.S. Citizenship and Immigration Services, Department of Homeland Security.

[FR Doc. E8–16063 Filed 7–14–08; 8:45 am]

BILLING CODE 9111–97–P

DEPARTMENT OF HOMELAND SECURITY

U.S. Customs and Border Protection

Agency Information Collection Activities: Guam Visa Waiver Agreement

AGENCY: U.S. Customs and Border Protection, Department of Homeland Security.

ACTION: 30-Day Notice and request for comments; Extension of an existing information collection: 1651–0126; Proposed collection; comments requested.

SUMMARY: U.S. Customs and Border Protection (CBP) of the Department of Homeland Security has submitted the following information collection request to the Office of Management and Budget (OMB) for review and approval in accordance with the Paperwork Reduction Act: Guam Visa Waiver Agreement (Form I–760). This is a proposed extension of an information collection that was previously approved. CBP is proposing that this information collection be extended with no change to the burden hours. This document is published to obtain comments form the public and affected agencies. This proposed information collection was previously published in

the **Federal Register** (73 FR 27842) on May 14, 2008, allowing for a 60-day comment period. This notice allows for an additional 30 days for public comments. This process is conducted in accordance with 5 CFR 1320.10.

DATES: Written comments should be received on or before August 14, 2008.

ADDRESSES: Interested persons are invited to submit written comments on the proposed information collection to the Office of Information and Regulatory Affairs, Office of Management and Budget. Comments should be addressed to Department of Homeland Security/ Customs and Border Protection, and sent via electronic mail to *oira_submission@omb.eop.gov* or faxed to (202) 395–6974.

SUPPLEMENTARY INFORMATION: U.S. Customs and Border Protection (CBP) encourages the general public and affected Federal agencies to submit written comments and suggestions on proposed and/or continuing information collection requests pursuant to the Paperwork Reduction Act (Pub. L.104–13). Your comments should address one of the following four points:

(1) Evaluate whether the proposed collection of information is necessary for the proper performance of the functions of the agency/component, including whether the information will have practical utility;

(2) Evaluate the accuracy of the agencies/components estimate of the burden of The proposed collection of information, including the validity of the methodology and assumptions used;

(3) Enhance the quality, utility, and clarity of the information to be collected; and

(4) Minimize the burden of the collections of information on those who are to respond, including the use of appropriate automated, electronic, mechanical, or other technological collection techniques or other forms of information technology, e.g., permitting electronic submission of responses.

Title: Guam Visa Waiver Agreement.

OMB Number: 1651–0126.

Form Number: I–760.

Abstract: This Agreement is intended to ensure that every alien transported to Guam pursuant to Public Law 99–396 meets all of the stipulated eligibility criteria prior to departure to Guam. It also outlines the requirements to be satisfied by the carrier.

Current Actions: There are no changes to the information collection. This submission is being submitted to extend the expiration date.

Estimated Number of Respondents: 5.

Estimated Number of Responses: 5.

Estimated Time per Response: 12 minutes.

Estimated Total Annual Burden Hours: 1.

If additional information is required contact: Tracey Denning, U.S. Customs and Border Protection, 1300 Pennsylvania Avenue, NW., Room 3.2.C, Washington, DC 20229, at 202–344–1429.

Dated: July 9, 2008.

Tracey Denning,

Agency Clearance Officer, Customs and Border Protection.

[FR Doc. E8–16127 Filed 7–14–08; 8:45 am]

BILLING CODE 9111–14–P

DEPARTMENT OF HOUSING AND URBAN DEVELOPMENT

[Docket No. FR–5187–N–40]

Interstate Land Sales Full Disclosure Requirements

AGENCY: Office of the Chief Information Officer, HUD.

ACTION: Notice.

SUMMARY: The proposed information collection requirement described below has been submitted to the Office of Management and Budget (OMB) for review, as required by the Paperwork Reduction Act. The Department is soliciting public comments on the subject proposal.

The Interstate Land Sales Full Disclosure Act, 15 U.S.C. 1701, *et seq.*, requires developers to register subdivisions or condominiums of 100 more non-exempt lots or units with HUD. The developer must give each purchaser a property report that meets HUD's requirements before the purchaser signs the sales contract or agreement for sales or lease.

DATES: *Comments Due Date:* August 14, 2008.

ADDRESSES: Interested persons are invited to submit comments regarding this proposal. Comments should refer to the proposal by name and/or OMB approval Number (2502–0243) and should be sent to: HUD Desk Officer, Office of Management and Budget, New Executive Office Building, Washington, DC 20503; fax: 202–395–6974.

FOR FURTHER INFORMATION CONTACT: Lillian Deitzer, Reports Management Officer, QDAM, Department of Housing and Urban Development, 451 Seventh Street, SW., Washington, DC 20410; e-mail Lillian Deitzer at *Lillian_L_Deitzer@HUD.gov* or telephone (202) 402–8048. This is not a toll-free number. Copies of available documents submitted to OMB may be obtained from Ms. Deitzer.

SUPPLEMENTARY INFORMATION: This notice informs the public that the Department of Housing and Urban Development has submitted to OMB a request for approval of the Information collection described below. This notice is soliciting comments from members of the public and affecting agencies concerning the proposed collection of information to: (1) Evaluate whether the proposed collection of information is necessary for the proper performance of the functions of the agency, including whether the information will have practical utility; (2) Evaluate the accuracy of the agency's estimate of the burden of the proposed collection of information; (3) Enhance the quality, utility, and clarity of the information to be collected; and (4) Minimize the burden of the collection of information on those who are to respond, including through the use of appropriate automated collection techniques or other forms of information technology, e.g., permitting electronic submission of responses.

This notice also lists the following information:

Title of Proposal: Interstate Land Sales Full Disclosure Requirements.

OMB Approval Number: 2502–0243.

Form Numbers: HUD–762.

Description of the Need for the Information and its Proposed Use: The Interstate Land Sales Full Disclosure Act, 15 U.S.C. 1701, *et seq.*, requires developers to register subdivisions or condominiums of 100 or more non-exempt lots or units with HUD. The developer must give each purchaser a property report that meets HUD's requirements before the purchaser signs the sales contract or agreement for sales or lease.

Frequency of Submission: On occasion, Annually.

	Number of respondents	Annual responses	×	Hours per response	=	Burden hours
Reporting burden	1,011	112		0.303		34,653

Total Estimated Burden Hours: 34,653.

Status: Extension of a currently approved collection.

Authority: Section 3507 of the Paperwork Reduction Act of 1995, 44 U.S.C. 35, as amended.

Dated: July 8, 2008.

Lillian L. Deitzer,

Departmental Paperwork Reduction Act Officer, Office of the Chief Information Officer.

[FR Doc. E8–16017 Filed 7–14–08; 8:45 am]

BILLING CODE 4210–67–P

DEPARTMENT OF HOUSING AND URBAN DEVELOPMENT

[Docket No. FR–5141–N–07]

Conference Call Meeting of the Manufactured Housing Consensus Committee

AGENCY: Office of the Assistant Secretary for Housing-Federal Housing Commissioner, HUD.

ACTION: Notice of upcoming meeting via conference call.

SUMMARY: This notice sets forth the schedule and proposed agenda of an upcoming meeting of the Manufactured Housing Consensus Committee (the Committee) to be held via telephone conference. This meeting is open to the general public, which may participate by following the instructions below.

DATES: The conference call meeting will be held on Wednesday, July 16, 2008, from 11 a.m. to 3 p.m. eastern daylight time.

ADDRESSES: Information concerning the conference call can be obtained from the Department's Consensus Committee Administering Organization, the National Fire Protection Association (NFPA). Interested parties can link onto the NFPA's Web site for instructions concerning how to participate, and for contact information for the conference call, in the section marked ''Business'' ''Manufactured Housing Consensus Committee Information''. The link can be found at: *http://www.hud.gov/offices/hsg/sfh/mhs/mhshome.cfm.* Alternately, interested parties may contact Jill McGovern of NFPA at (617) 984–7404 (this is not a toll-free number) for conference call information.

FOR FURTHER INFORMATION CONTACT: William W. Matchneer III, Associate Deputy Assistant Secretary, Office of Regulatory Affairs and Manufactured Housing, Department of Housing and Urban Development, 451 7th Street, SW., Washington, DC 20410, telephone (202) 708–6409 (this is not a toll-free number). Persons who have difficulty hearing or speaking may access this number via TTY by calling the toll-free Federal Information Relay Service at (800) 877–8339.

SUPPLEMENTARY INFORMATION: Notice of this meeting is provided in accordance with Sections 10(a) and (b) of the Federal Advisory Committee Act (5 U.S.C. App. 2) and 41 CFR 102–3.150. The Manufactured Housing Consensus Committee was established under Section 604(a)(3) of the National Manufactured Housing Construction and Safety Standards Act of 1974, as amended, 42 U.S.C. 5403(a)(3). The Committee is charged with providing recommendations to the Secretary to adopt, revise, and interpret manufactured home construction and safety standards and procedural and enforcement regulations, and with developing and recommending proposed model installation standards to the Secretary.

The purpose of this conference call meeting is for the Committee to review and provide comments to the Secretary on a draft proposed rule for the On-Site Completion of Construction of Manufactured Homes.

Tentative Agenda

A. Roll call.

B. Welcome and opening remarks.

C. Regulatory Enforcement subcommittee discussion and recommendations.

D. Full Committee meeting for discussion of the On-Site Completion of Construction of Manufactured Homes Draft Proposed Rule.

E. Adjournment.

Dated: July 10, 2008.

Brian D. Montgomery,

Assistant Secretary for Housing—Federal Housing Commissioner.

[FR Doc. E8–16136 Filed 7–14–08; 8:45 am]

BILLING CODE 4210–67–P

DEPARTMENT OF THE INTERIOR

Bureau of Indian Affairs

Privacy Act of 1974, as Amended; Amendment of an Existing System of Records

AGENCY: Bureau of Indian Affairs, Interior.

ACTION: Proposed amendment of existing Privacy Act system of records.

SUMMARY: Under the Privacy Act of 1974, as amended (5 U.S.C. 552a), the Bureau of Indian Affairs (BIA) is issuing public notice of its intent to amend an existing Privacy Act system of records notice entitled Interior, BIA—13 ''Indian Loan Files,'' published at 48 FR 41098 (September 13, 1983).

DATES: Comments must be received by August 25, 2008.

ADDRESSES: Any persons interested in commenting on this proposed amendment may do so by submitting comments in writing to the Privacy Act Officer, Bureau of Indian Affairs, 625 Herndon Parkway, Herndon, VA 20170, or by e-mail to *Joan.Tyler@bia.gov*

FOR FURTHER INFORMATION CONTACT: Darlene Greifenberger, Office of Indian Energy and Economic Development, 1951 Constitution Avenue, NW., MS SIB–20, Washington, DC 20245, 202–513–7680 or by e-mail at *Darlene.Greifenberger@bia.gov*

SUPPLEMENTARY INFORMATION: This notice is published pursuant to the Privacy Act of 1974 (5 U.S.C. 552a(e)(4)) and is in exercise of authority delegated by the Secretary of the Interior to the Assistant Secretary—Indian Affairs in 209 DM 8.1.

The Office of Indian Energy and Economic Development Loan Guaranty and Insurance Program was developed to implement the Indian Financing Act of 1974 (25 U.S.C. 1481), as amended. This law requires the Department of the Interior to encourage private commercial lenders to make loans to Indian businesses they might otherwise deny because of insufficient familiarity with Indian business prospects. The program offers private lenders enhanced loan security with a partial loan guaranty which allows a modest federal investment to leverage large amounts of private capital for Indian business development. The system of records supporting this program, now known as the Loan Management and Accounting System (LOMAS), protects information contained in loan applications and supporting documents.

The purpose of this notice is to amend the Privacy Act System of Records entitled Interior, BIA—13: ''Indian Loan Files,'' by (1) Changing the name of the system to Interior, BIA—13: ''Loan Management and Accounting System (LOMAS)''; (2) updating the addresses of the system locations, system managers, the categories of individuals covered by the system; (3) updating the information regarding disclosures outside the Department of the Interior; and (4) updating the storage, retrievability and safeguards statements to incorporate the changes since the system notice was last published.

A copy of the notice, with changes incorporated, is attached.

Dated: July 9, 2008.

George T. Skibine,

Acting Deputy Assistant Secretary for Policy and Economic Development—Indian Affairs.

SYSTEM NAME

Loan Management and Accounting System (LOMAS)—Interior, BIA—13.

SYSTEM LOCATION

(1) Office of Indian Energy and Economic Development, 1951 Constitution Avenue NW., MS SIB–20, Washington, DC, 20245.

(2) Loan Accounting Section, Bureau of Indian Affairs (BIA), 1001 Indian School Road NW., Ste. 349, Albuquerque, NM, 87104. (Send correspondence to: P.O. Box 7430, Albuquerque, NM, 87194–7430.)

(3) System Administrator—LOMAS, National Business Center, 421 Gold Street SW., Suite 103, Albuquerque, NM, 87102.

(4) BIA Regional and Agency credit offices. For a listing of specific locations, contact the System Manager, at the address provided below.

CATEGORIES OF INDIVIDUALS COVERED BY THE SYSTEM

(1) Applicants who applied for or received loan guaranties, loan insurance, or interest subsidies.

(2) Applicants who applied for guarantied bonds.

(3) Purchasers of guarantied or insured loans.

CATEGORIES OF RECORDS IN THE SYSTEM:

(1) Loan applications, including but not limited to loan collateral information, loan collection information, loan approval information, loan budget validation, and loan disbursement information;

(2) Supporting documents for loans;

(3) Borrower information including name, address, birth date, phone number, loan guaranty number, tribal name, record of payment cards, guaranty agreements, eligibility certificates, default documents, and/or promissory notes;

(4) Information pertaining to individuals who refuse to make required loan payments when it is determined by the Department of Treasury that they have sufficient assets to pay and/or as a result of the individual misuse of loan proceeds;

(5) Interest subsidy requests;

(6) Loan extension approvals;

(7) Information on loan applications not approved for guaranty or insurance; and

(8) Account information for individuals approved for loans, which includes loan account status, loan advance and subsidy status and approval status, loan number and borrower ID.

AUTHORITY FOR MAINTENANCE OF THE SYSTEM:

This system of records is maintained under the authority of Public Law 98–449, codified at 25 U.S.C. 1451, which authorizes the Department of the Interior to finance economic development on Indian Reservations.

ROUTINE USES OF RECORDS MAINTAINED IN THE SYSTEM, INCLUDING CATEGORIES OF USERS AND THE PURPOSES OF SUCH USES:

The primary use of the records is to administer the Loan Guaranty and Insurance Program by tracking and recording payments and unpaid balances and providing information on payments made for paying interest subsidy, credits obtained, service loans made, and premiums paid by lenders.

Disclosures outside the Department of the Interior may also be made:

(1) To the Department of the Treasury and/or Justice in the form of information on individual delinquent borrowers or borrowers who have misused funds in order to support debt collection efforts.

(2) To Congress in the form of periodic reports on the status of the Indian Affairs Loan Guarantee, Insurance and Interest Subsidy Program in order to document the use of program funds.

(3) To credit reporting agencies in the form of basic information regarding payment delinquencies in order to satisfy Federal claims collection standards.

(4) (a) To any of the following entities or individuals, when the circumstances set forth in paragraph (b) are met:

(i) The Department of Justice (DOJ);

(ii) A court, adjudicative or other administrative body;

(iii) A party in litigation before a court or adjudicative or other administrative body; or

(iv) Any DOI employee acting in his or her individual capacity if DOI or DOJ has agreed to represent that employee or pay for private representation of the employee;

(b) When:

(i) One of the following is a party to the proceeding or has an interest in the proceeding:

(A) DOI or any component of DOI;

(B) Any other Federal agency appearing before the Office of Hearings and Appeals;

(C) Any DOI employee acting in his or her official capacity;

(D) Any DOI employee acting in his or her individual capacity if DOI or DOJ has agreed to represent that employee or pay for private representation of the employee;

(E) The United States, when DOJ determines that DOI is likely to be affected by the proceeding; and

(ii) DOI deems the disclosure to be:

(A) Relevant and necessary to the proceeding; and

(B) Compatible with the purposes for which the records were compiled.

(5) To a congressional office in response to a written inquiry that an individual covered by the system, or the heir of such individual if covered individual is deceased, has made to the office.

(6) To any criminal, civil, or regulatory law enforcement authority (whether federal, state, territorial, local, tribal or foreign) when a record, either alone or in conjunction with other information, indicates a violation or potential violation of law—criminal, civil, or regulatory in nature, and the disclosure is compatible with the purpose for which the records were compiled.

(7) To an official of another Federal agency to provide information needed in the performance of official duties related to reconciling or reconstructing data files or to enable that agency to respond to an inquiry by the individual to whom the record pertains.

(8) To Federal, State, territorial, local, tribal, or foreign agencies that have requested information relevant or necessary to the hiring, firing, or retention of an employee or contractor, or the issuance of a security clearance, license, contract, grant, or other benefit, when the disclosure is compatible with the purpose for which the records were compiled.

(9) To representatives of the National Archives and Records Administration to conduct records management inspections under the authority of 44 U.S.C. 2904 and 2906.

(10) To state and local governments and tribal organizations to provide information needed in response to court order and/or discovery purposes related to litigation, when the disclosure is compatible with the purpose for which the records were compiled.

(11) To an expert, consultant, or contractor (including employees of the contractor) of DOI that performs services requiring access to these records on DOI's behalf to carry out the purposes of the system.

(12) The appropriate agencies, entities, and persons when:

(a) It is suspected or confirmed that the security or confidentiality of information in the system of records has been compromised; and

(b) The Department has determined that as a result of the suspected or confirmed compromise there is a risk of

harm to economic or property interest, identity theft or fraud, or harm to the security or integrity of this system or other systems or programs (whether maintained by the Department or another agency or entity) that rely upon the compromised information; and

(c) The disclosure is made of such agencies, entities, and persons who are reasonably necessary to assist in connection with the Department's efforts to respond to the suspected or confirmed compromise and prevent, minimize, or remedy such harm.

(13) To the Office of Management and Budget during the coordination and clearance process in connection with legislative affairs as mandated by OMB Circular A–19.

(14) To the Department of the Treasury to recover debts owed to the United States.

(15) To the news media when the disclosure is compatible with the purpose for which the records were compiled.

DISCLOSURES TO CONSUMER REPORTING AGENCIES:

Pursuant to 5 U.S.C. 552a(b)(12), records can be disclosed to consumer reporting agencies as they are defined by the Fair Credit Reporting Act (15 U.S.C. 1681a(f)) or the Federal Claims Collection Act of 1966 (31 U.S.C. 3701(a)(3)).

POLICIES AND PRACTICES FOR STORING, RETRIEVING, ACCESSING, RETAINING, AND DISPOSING OF RECORDS IN THE SYSTEM:

STORAGE:

Records are stored in both manual and electronic format. Manual records are maintained in letter files, application files, and computer printouts. Electronic records are maintained in network access storage, on hard disks, and on magnetic tapes.

RETRIEVABILITY:

Records are:

(a) Indexed by name of borrower, loan guaranty number, and tribal name when applicable.

(b) Retrieved by manual search or computer inquiry.

SAFEGUARDS:

LOMAS is maintained with controls meeting safeguard requirements identified in Departmental Privacy Act Regulations (43 CFR 2.51) for manual and automated records. Access to records is limited to authorized personnel whose official duties require such access; agency officials have access only to records pertaining to their agencies.

(1) Physical Security: Paper or electronic format records are maintained in locked file cabinets and/or in secured rooms.

(2) Technical Security: Electronic records are maintained in conformity with Office of Management and Budget and Departmental guidelines reflecting the implementation of the Federal Information Security Management Act. Electronic data is protected through user identification, passwords, database permissions, and software controls. These security measures establish different degrees of access for different types of users. An audit trail is maintained and reviewed periodically to identify unauthorized access. A Privacy Impact Assessment was completed for LOMAS and is updated at least annually to ensure that Privacy Act requirements and personally identifiable information safeguard requirements are met.

(3) Administrative Security: All DOI and contractor employees with access to LOMAS are required to complete Privacy Act, Records Management Act, and Security Training.

RETENTION AND DISPOSAL:

Records relating to individuals covered by this system are retained in accordance with the 16 Bureau of Indian Affairs Manual (BIAM), as approved by the National Archives and Records Administration (NARA), and are scheduled for permanent retention. All records of guarantied or insured loans are stored permanently. Records of loans that are paid, cancelled, or otherwise disposed of are archived. Records of rejected loans are stored for 1 year and then archived.

SYSTEM MANAGER AND ADDRESS:

Director, Office of Indian Energy and Economic Development, Office of the Assistant Secretary—Indian Affairs, 1951 Constitution Avenue, NW., MS SIB–20,Washington, DC 20245.

NOTIFICATION PROCEDURES:

Inquiries regarding the existence of records should be addressed to the System Manager. The request must be in writing, signed by the requester, and meet the requirements of 43 CFR 2.60.

RECORDS ACCESS PROCEDURES:

A request for access may be addressed to the System Manager. The request must be in writing, signed by the requester, and meet the requirements of 43 CFR 2.63.

CONTESTING RECORD PROCEDURES:

A petition for amendment should be addressed to the System Manager. The request must be in writing, signed by the requester, and meet the content requirements of 43 CFR 2.71.

RECORD SOURCE CATEGORIES:

Information is received from individuals on whom the records are maintained, commercial banks, BIA employees and contractors, and purchasers of guarantied or insured loans.

EXEMPTIONS CLAIMED FOR THE SYSTEM:

None.

[FR Doc. E8–16098 Filed 7–14–08; 8:45 am]

BILLING CODE 4312–RY–P

DEPARTMENT OF THE INTERIOR

Bureau of Indian Affairs

Privacy Act of 1974, as Amended; Establishment of a New System of Records

AGENCY: Bureau of Indian Affairs.

ACTION: Notice of addition of a new system of records.

SUMMARY: The Department of the Interior (DOI), Bureau of Indian Affairs is issuing public notice of its intent to add a new Privacy Act system of records to its inventory of records systems subject to the Privacy Act of 1974 (5 U.S.C. 552a). This action is necessary to meet the requirements of the Privacy Act to publish in the **Federal Register** notice of the existence and character of records systems maintained by the agency (5 U.S.C. 552a(e)(4)). This new Privacy Act system of records is entitled Interior, BIA—31: ''Information Management System'' (IMS).

DATE: Comments must be received by August 25, 2008.

ADDRESSES: Any persons interested in commenting on this new system of records may do so by submitting comments in writing to the Privacy Act Officer, 625 Herndon Parkway, Herndon, VA 20170, or by e-mail to *Joan.Tyler@bia.gov.*

FOR FURTHER INFORMATION CONTACT: Nicole Jaber, Director, Division of Internal Validation and Verification, Office of the Chief Information Officer, 625 Herndon Parkway, Herndon, VA 20170, or by e-mail at *Nicole.Jaber@bia.gov.*

SUPPLEMENTARY INFORMATION: This notice is published pursuant to the Privacy Act of 1974 (5 U.S.C. 552a(3)(4)) and is in exercise of authority delegated by the Secretary of the Interior to the Assistant Secretary—Indian Affairs in 209 DM 8.1. This notice establishes the Privacy Act system or record entitled Interior, BIA—31, ''Information Management System'' (IMS).

The purpose of IMS is to automate the management of all types of documents

in a single database. Records in the system are maintained as electronic copies only. IMS provides a Web-based document management system accessible via a browser interface with the Office of the Assistant Secretary of Indian Affairs, and the Bureau of Indian Affairs. Documents are stored in the database in any file format, such as, but not limited to, Microsoft Word, Excel, Power Point, and scanned PDF or TIF files. Documents can be routed from one person to another for assignment, comment, response, editing, surname, and signature. A variety of status reports are available to track the progress of workflows. Routing includes communication tools for route members to add comments to the workflow. Documents can be electronically delivered to a number of individuals simultaneously, either for a response or for read only purposes.

Dated: July 9, 2008.

George T. Skibine,

Acting Deputy Assistant Secretary, Policy and Economic Development.

SYSTEM NAME:

Information Management System (IMS): Interior, BIA–31.

SYSTEM LOCATION:

Herndon Data Center (HDC), 625 Herndon Parkway, Herndon, VA 20170.

CATEGORIES OF INDIVIDUALS COVERED BY THE SYSTEM:

Individuals who are employees of BIA and AS-IA who are the originators or approving officials for government documentation.

CATEGORIES OF RECORDS IN THE SYSTEM:

(1) Information about employees to include name, work location and home address, work and home telephone number and fax numbers;

(2) Employee's office information, title, supervisor, and supervisory status;

(3) AS–IA and BIA Offices;

(4) Documents generated, their originator and originating office, and their approval destination(s); and

(5) Document tracking data and document suspense requirements.

AUTHORITY FOR MAINTENANCE OF THE SYSTEM:

This system of records is maintained under the authority of 25 U.S.C. 1, 1a, 13; 18 U.S.C. 3055; 25 U.S.C. 480.

ROUTINE USES OF RECORDS MAINTAINED IN THE SYSTEM, INCLUDING CATEGORIES OF USERS AND THE PURPOSES OF SUCH USES:

The system is used to manage all AS–IA correspondence in a single database. IMS contains information to facilitate the efficiency of the correspondence process throughout AS–IA. The system will allow the tracking of correspondence from receipt to completion/response, provide valuable information to AS–IA coordinators, identify duplicate requests, ensure consistency in responses, reduce processing time, support action on correspondence, and improve customer service. IMS facilitates the management of documents, maintains multiple versions of any single document, and provides a mechanism to distribute documents to a group of individuals with the capability for the group members to respond/reply to the sender, and to manage/track workflow.

Disclosure(s) outside the Department of the Interior may be made:

(1)(a) To any of the following entities or individuals, when the circumstances set forth in paragraph (b) are met:

(i) The Department of Justice (DOJ);

(ii) A court, adjudicative or other administrative body;

(iii) A party in litigation before a court or adjudicative or other administrative body; or

(iv) Any DOI employee acting in his or her individual capacity if DOI or DOJ has agreed to represent that employee or pay for private representation of the employee;

(b) When:

(i) One of the following is a party to the proceeding or has an interest in the proceeding:

(A) DOI or any component of DOI;

(B) Any other Federal agency appearing before the Office of Hearings and Appeals;

(C) Any DOI employee acting in his or her official capacity;

(D) Any DOI employee acting in his or her individual capacity if DOI or DOJ has agreed to represent that employee or pay for private representation of the employee;

(E) The United States, when DOJ determines that DOI is likely to be affected by the proceeding; and

(ii) DOI deems the disclosure to be:

(A) Relevant and necessary to the proceeding; and

(B) Compatible with the purposes for which the records were compiled.

(2) To a congressional office in response to a written inquiry that an individual covered by the system, or the heir of such individual if covered individual is deceased, has made to the office.

(3) To any criminal, civil, or regulatory law enforcement authority (whether Federal, State, territorial, local, tribal, or foreign) when a record, either alone or in conjunction with other information, indicates a violation or potential violation of law—criminal, civil, or regulatory in nature, and the disclosure is compatible with the purpose for which the records were compiled.

(4) To an official of another Federal agency to provide information needed in the performance of official duties related to reconciling or reconstructing data files or to enable that agency to respond to an inquiry by the individual to whom the record pertains.

(5) To Federal, State, territorial, local, tribal, or foreign agencies that have requested information relevant or necessary to the hiring, firing, or retention of an employee or contractor, or the issuance of a security clearance, license, contract, grant, or other benefit, when the disclosure is compatible with the purpose of which the records were compiled.

(6) To representatives of the National Archives and Records Administration to conduct records management inspections under the authority of 44 U.S.C. 2904 and 2906.

(7) To State and local governments and tribal organizations to provide information needed in response to court order and/or discovery purposes related to litigation, when the disclosure is compatible with the purpose for which the records were compiled.

(8) To an expert, consultant, or contractor (including employees of the contractor) of DOI that performs services requiring access to these records on DOI's behalf to carry out the purposes of the system.

(9) The appropriate agencies, entities, and persons when:

(a) It is suspected or confirmed that the security or confidentiality of information in the system of records has been compromised; and

(b) The Department has determined that as a result of the suspected or confirmed compromise there is a risk of harm to economic or property interest, identity theft or fraud, or harm to the security or integrity of this system or other systems or programs (whether maintained by the Department or another agency or entity) that rely upon the compromised information; and

(c) The disclosure is made of such agencies, entities and persons who are reasonably necessary to assist in connection with the Department's efforts to respond to the suspected or confirmed compromise and prevent, minimize, or remedy such harm.

(10) To the Office of Management and Budget during the coordination and clearance process in connection with legislative affairs as mandated by OMB Circular A–19.

(11) To the Department of the Treasury to recover debts owed to the United States.

(12) To the news media when the disclosure is compatible with the purpose for which the records were compiled.

DISCLOSURES TO CONSUMER REPORTING AGENCIES:

Pursuant to 5 U.S.C. 552a(b)(12), records can be disclosed to consumer reporting agencies as they are defined by the Fair Credit Reporting Act (15 U.S.C. 1681a(f)) or the Federal Claims Collection Act of 1966 (31 U.S.C. 3701(a)(3)).

POLICIES AND PRACTICES FOR STORING, RETRIEVING, ACCESSING, RETAINING, AND DISPOSING OF RECORDS IN THE SYSTEM:

STORAGE:

Records are stored in electronic media: hard disks and magnetic tapes.

RETRIEVABILITY:

Users can access the IMS system by navigating (via browser) to the IMS logon Web page, and successfully entering their login credentials. Documents stored in IMS are retrieved by document name, subject matter, or author.

SAFEGUARDS:

IMS is maintained with controls meeting safeguard requirements identified in Departmental Privacy Act Regulations (43 CFR 2.51) for manual and automated records. Access to records is limited to authorized personnel whose official duties require such access; agency officials have access only to records pertaining to their agencies.

(1) Physical Security: Electronic format records are maintained in locked file cabinets and/or in secured rooms. Buildings have security guards and/or secured doors, and all entrances are monitored by electronic surveillance equipment on a 24/7 basis.

(2) Technical Security: Electronic records are maintained in conformity with Office of Management and Budget and Departmental guidelines reflecting the implementation of the Federal Information Security Management Act. Electronic data are protected through user identification, passwords, database permissions, and software controls. These security measures establish different degrees of access for different types of users. An audit trail is maintained and reviewed periodically to identify changes made to records. A Privacy Impact Assessment was completed for the IMS and is updated at least annually to ensure that Privacy Act requirements and personally identifiable information safeguard requirements are met.

(3) Administrative Security: All DOI and contractor employees with access to IMS are required to complete Privacy Act, Records Management Act, and Security Awareness Training.

RETENTION AND DISPOSAL:

Records relating to individuals covered by this system are retained in accordance with the 16 Bureau of Indian Affairs Manual (BIAM), approved by the National Archives and Records Administration (NARA), and scheduled for permanent retention.

SYSTEM MANAGER AND ADDRESS:

Director, Office of Information Operations (OIO), Office of the Chief Information Officer, 625 Herndon Parkway, Herndon, VA 20170.

NOTIFICATION PROCEDURES:

Inquiries regarding the existence of records should be addressed to the System Manager. The request must be in writing, signed by the requester, and meet the requirements of 43 CFR 2.60.

RECORDS ACCESS PROCEDURES:

A request for access should be addressed to the System Manager. The request must be in writing, signed by the requester, and meet the requirements of 43 CFR 2.63.

CONTESTING RECORD PROCEDURES:

A petition for amendment should be addressed to the System Manager. The request must be in writing, signed by the requester, and meet the content requirements of 43 CFR 2.71.

RECORD SOURCE CATEGORIES:

Authorized user data comes from the Identity Information System (IIS). The subject document data is entered by the user.

EXEMPTIONS CLAIMED FOR THE SYSTEM:

None.

[FR Doc. E8–16099 Filed 7–14–08; 8:45 am]

BILLING CODE 4312–RY–P

DEPARTMENT OF THE INTERIOR

Bureau of Indian Affairs

Privacy Act of 1974, as Amended; Amendment of an Existing System of Records

AGENCY: Bureau of Indian Affairs, Interior.

ACTION: Proposed amendment of an existing system of records.

SUMMARY: The Department of the Interior (DOI), Bureau of Indian Affairs (BIA) is issuing public notice, pursuant to the Privacy Act of 1974 (5 U.S.C. 552a), of its intent to amend its existing Privacy Act system of records notice entitled Interior, BIA–07, ''Tribal Rolls,'' published at 48 FR 41098 (September 13, 1983).

DATES: Comments must be received by August 25, 2008.

ADDRESSES: Any persons interested in commenting on this proposed amendment may do so by submitting comments in writing to the Privacy Act Officer, Bureau of Indian Affairs, 625 Herndon Parkway, Herndon, VA 20170, or by e-mail to *Joan.Tyler@bia.gov.*

FOR FURTHER INFORMATION CONTACT: Dolores Ayotte, Acting Superintendent, Alaska Region, West Central Alaska Agency, Bureau of Indian Affairs, Department of the Interior, 3601 C Street, Suite 1100, Anchorage, AK 99503, or by e-mail to *Delores.Ayotte@bia.gov.*

SUPPLEMENTARY INFORMATION: This notice is published pursuant to the Privacy Act of 1974 (5 U.S.C. 552a(e)(4)) and is in exercise of authority delegated by the Secretary of the Interior to the Assistant Secretary—Indian Affairs in 209 DM 8.1. This notice amends the Privacy Act System of Records entitled Interior, BIA–07, ''Tribal Rolls.''

The purpose of this amendment is to: (1) Change the name of the system to Interior, BIA–07, ''Progeny;'' (2) update the information on the location of the records and the technology used to store and retrieve records; (3) more clearly state the information that is included in the system of records; (4) more clearly state the current routine uses of the records by organizations and individuals outside of the Department of the Interior; and (5) expand the routine uses of such information to include using these records as a basis for the creation of the Certificate of Degree of Indian Blood (CDIB) for the Alaska Native Claims Settlement Act (ANCSA) enrollees and descendants. A copy of the notice, with changes incorporated, is attached.

Dated: July 9, 2008.

George T. Skibine,

Acting Deputy Assistant Secretary, Policy and Economic Development.

SYSTEM NAME:

Progeny—Interior, BIA–07.

SYSTEM LOCATION:

(1) BIA Albuquerque Data Center, 1011 Indian School Rd. NW., Albuquerque, NM 87104.

(2) Other BIA Area, Agency, and Field Offices. (For a listing of specific locations, contact the System Manager.)

CATEGORIES OF INDIVIDUALS COVERED BY THE SYSTEM:

Alaska Native Individuals originally enrolled through the Alaska Native Claims Settlement Act and their descendants.

CATEGORIES OF RECORDS IN THE SYSTEM:

- Tribal member information, including name, social security number, birth date, address, phone number, blood quantum, names of biological parents, and grandparents, and certificate of Degree of Indian Blood (CDIB);
- Tribal affiliation information, including Tribal Enrollment Number, Tribal member profile report, and Tribal composition;
- Tribal member genealogy information, including a family tree report, birth, marriage, and death notices; and
- Records of actions taken, including judgment distributions, per capita payments, shares of stocks, ownership, and census data taken using the rolls as a base.

AUTHORITY FOR MAINTENANCE OF THE SYSTEM:

This system of records is maintained under the authority of 25 U.S.C. 163; 25 U.S.C. 480.

ROUTINE USES OF RECORDS MAINTAINED IN THE SYSTEM, INCLUDING CATEGORIES OF USERS AND THE PURPOSES OF SUCH USES:

The primary use of the records is to support DOI's statutory duty to create a Secretary's Roll of Tribal group members. Records are used to determine eligibility of individuals to participate in or enjoy benefits from an interest in a Tribal group, and to provide lists of approved enrollees used to distribute funds or income, or as a base to gather census or ownership data for planning purposes.

Disclosures outside of the Department of the Interior may be made:

(1) To the Tribe, Band, Pueblo, or corporation of which the individual to which the record pertains is a member or stockholder.

(2) (a) To any of the following entities or individuals, when the circumstances set forth in paragraph (b) are met:

(i) The Department of Justice (DOJ);

(ii) A court, adjudicative or other administrative body;

(iii) A party in litigation before a court or adjudicative or other administrative body; or

(iv) Any DOI employee acting in his or her individual capacity if DOI or DOJ has agreed to represent that employee or pay for private representation of the employee;

(b) When:

(i) One of the following is a party to the proceeding or has an interest in the proceeding:

(A) DOI or any component of DOI;

(B) Any other Federal agency appearing before the Office of Hearings and Appeals;

(C) Any DOI employee acting in his or her official capacity;

(D) Any DOI employee acting in his or her individual capacity if DOI or DOJ has agreed to represent that employee or pay for private representation of the employee;

(E) The United States, when DOJ determines that DOI is likely to be affected by the proceeding; and

(ii) DOI deems the disclosure to be:

(A) Relevant and necessary to the proceeding; and

(B) Compatible with the purposes for which the records were compiled.

(3) To a congressional office in response to a written inquiry that an individual covered by the system, or the heir of such individual if covered individual is deceased, has made to the office.

(4) To any criminal, civil, or regulatory law enforcement authority (whether Federal, State, territorial, local, tribal, or foreign) when a record, either alone or in conjunction with other information, indicates a violation or potential violation of law—criminal, civil, or regulatory in nature, and the disclosure is compatible with the purpose for which the records were compiled.

(5) To an official of another Federal agency to provide information needed in the performance of official duties related to reconciling or reconstructing data files or to enable that agency to respond to an inquiry by the individual to whom the record pertains.

(6) To Federal, State, territorial, local, tribal, or foreign agencies that have requested information relevant or necessary to the hiring, firing, or retention of an employee or contractor, or the issuance of a security clearance, license, contract, grant, or other benefit, when the disclosure is compatible with the purpose for which the records were compiled.

(7) To representatives of the National Archives and Records Administration to conduct records management inspections under the authority of 44 U.S.C. 2904 and 2906.

(8) To State and local governments and tribal organizations to provide information needed in response to court order and/or discovery purposes related to litigation, when the disclosure is compatible with the purpose for which the records were compiled.

(9) To an expert, consultant, or contractor (including employees of the contractor) of DOI that performs services requiring access to these records on DOI's behalf to carry out the purposes of the system.

(10) The appropriate agencies, entities, and persons when:

(a) It is suspected or confirmed that the security or confidentiality of information in the system of records has been compromised; and

(b) The Department has determined that as a result of the suspected or confirmed compromise there is a risk of harm to economic or property interest, identity theft or fraud, or harm to the security or integrity of this system or other systems or programs (whether maintained by the Department or another agency or entity) that rely upon the compromised information; and

(c) The disclosure is made of such agencies, entities and persons who are reasonably necessary to assist in connection with the Department's efforts to respond to the suspected or confirmed compromise and prevent, minimize, or remedy such harm.

(11) To the Office of Management and Budget during the coordination and clearance process in connection with legislative affairs as mandated by OMB Circular A–19.

(12) To the Department of the Treasury to recover debts owed to the United States.

(13) To the news media when the disclosure is compatible with the purpose for which the records were compiled.

DISCLOSURES TO CONSUMER REPORTING AGENCIES:

Pursuant to 5 U.S.C. 552a(b)(12), records can be disclosed to consumer reporting agencies as they are defined by the Fair Credit Reporting Act (15 U.S.C. 1681a(f)) or the Federal Claims Collection Act of 1966 (31 U.S.C. 3701(a)(3)).

POLICIES AND PRACTICES FOR STORING, RETRIEVING, ACCESSING, RETAINING, AND DISPOSING OF RECORDS IN THE SYSTEM:

STORAGE:

Records are stored in both paper and electronic form.

RETRIEVABILITY:

Manual records are indexed by name. Electronic records can be retrieved by name, social security number, birth date, enrollment number, phone number, or address.

SAFEGUARDS:

Progeny is maintained with controls meeting safeguard requirements

identified in Departmental Privacy Act Regulations (43 CFR 2.51) for manual and automated records. Access to records is limited to authorized personnel whose official duties require such access; agency officials have access only to records pertaining to their agencies.

(1) Physical Security: Paper or electronic format records are maintained in locked file cabinets and/or in secured rooms.

(2) Technical Security: Electronic records are maintained in conformity with Office of Management and Budget and Departmental guidelines reflecting the implementation of the Federal Information Security Management Act. Electronic data are protected through user identification, passwords, database permissions, and software controls. These security measures establish different degrees of access for different types of users. An audit trail is maintained and reviewed periodically to identify unauthorized access. A Privacy Impact Assessment was completed for Progeny and is updated at least annually to ensure that Privacy Act requirements and personally identifiable information safeguard requirements are met.

(3) Administrative Security: All DOI and contractor employees with access to Progeny are required to complete Privacy Act, Records Management Act, and Security Training.

RETENTION AND DISPOSAL:

Records relating to individuals covered by this system are retained in accordance with the 16 Bureau of Indian Affairs Manual (BIAM), as approved by the National Archives and Records Administration, and are scheduled for permanent retention.

SYSTEM MANAGER AND ADDRESS:

Deputy Bureau Director, Office of Trust Services, 1849 C Street, NW., Washington, DC, 20240.

NOTIFICATION PROCEDURES:

Inquiries regarding the existence of records should be addressed to the System Manager. The request must be in writing, signed by the requester, and meet the requirements of 43 CFR 2.60.

RECORD ACCESS PROCEDURES:

A request for access may be addressed to the System Manager. The request must be in writing, signed by the requester, and meet the requirements of 43 CFR 2.63.

CONTESTING RECORD PROCEDURES:

A petition for amendment should be addressed to the System Manager. The request must be in writing, signed by the requester, and meet the content requirements of 43 CFR 2.71.

RECORD SOURCE CATEGORIES:

Source information is received from individuals on whom the records are maintained, or from Federal and Tribal Government enrollment records.

EXEMPTIONS CLAIMED FOR THE SYSTEM:

None.

[FR Doc. E8–16100 Filed 7–14–08; 8:45 am]

BILLING CODE 4312–RY–P

DEPARTMENT OF THE INTERIOR

Bureau of Indian Affairs

Privacy Act of 1974, as Amended; Establishment of a New System of Records

AGENCY: Bureau of Indian Affairs, Interior.

ACTION: Notice of addition of a new system of records.

SUMMARY: The Department of the Interior (DOI), Bureau of Indian Affairs (BIA) is issuing public notice of its intent to add a new Privacy Act system of records to its inventory of records systems subject to the Privacy Act of 1974 (5 U.S.C. 552a). This action is necessary to meet the requirements of the Privacy Act to publish in the **Federal Register** notice of the existence and character of records systems maintained by the agency (5 U.S.C. 552a(e)(4)). The new Privacy Act system of records is entitled Interior, BIA–34: ''National Irrigation Information Management System (NIIMS).''

DATES: Comments must be received by August 25, 2008.

ADDRESSES: Any persons interested in commenting on this new system of records may do so by submitting comments in writing to the Privacy Act Officer, 625 Herndon Parkway, Herndon, Virginia 20170, or by e-mail to *Joan.Tyler@bia.gov.*

FOR FURTHER INFORMATION CONTACT: For information regarding Interior, BIA–34, National Irrigation Information Management System (NIIMS), contact Vicki Forrest, Deputy Bureau Director, Office of Trust Services, Bureau of Indian Affairs, 1849 C Street, NW., Washington, DC 20240, or by e-mail to *Vicki.Forrest@bia.gov.*

SUPPLEMENTARY INFORMATION: This notice is published pursuant to the Privacy Act of 1974 (5 U.S.C. 552a(e)(4)) and is in exercise of authority delegated by the Secretary of the Interior to the Assistant Secretary—Indian Affairs in 209 DM 8.1. This notice establishes the Privacy Act system of records entitled Interior, BIA–34, ''National Irrigation Information Management System (NIIMS).''

NIIMS is a billing, debt collection, and debt management system for customers of Indian irrigation operation-and-maintenance and construction projects operated by the BIA with costs that are reimbursable to the Federal government. NIIMS tracks financial billing and collection information, establishes receivables, processes collection actions and posts them against the receivables, and on a daily basis generates summarized transactions for interfacing with other Departmental financial systems.

Dated: July 9, 2008.

George T. Skibine,

Acting Deputy Assistant Secretary for Policy and Economic Development—Indian Affairs.

SYSTEM NAME:

National Irrigation Information Management System (NIIMS): Interior, BIA—34.

SYSTEM LOCATION:

DOI National Business Center (NBC), 7401 W. Mansfield Ave, D–2772, Denver, CO 80235–2230.

CATEGORIES OF INDIVIDUALS COVERED BY THE SYSTEM:

(1) Customers (water users) of Indian irrigation operation-and-maintenance and construction projects operated by the BIA, including individuals (Indians and non-Indians), private sector parties (businesses), and tribal governments.

(2) Owners of land on which Indian irrigation projects are constructed, operated and maintained, to whom payments for water are made, including individuals (Indians and non-Indians), private sector parties (businesses), and tribal governments.

CATEGORIES OF RECORDS IN THE SYSTEM:

(1) Information on current and former owners of land on which Indian irrigation projects are constructed, including land owner account number, Social Security Number, tax identification number, Indian identification number, phone number, name, address, Federal or State identification numbers.

(2) Customer (water user) billing information, including name of the person who remits payment, and the name of the party who was legally allowed to claim an applicable tax write-off for irrigation related expenses.

(3) Information about land on which irrigation projects are constructed including land construction data, county assigned district identifier,

acreage, description of location, name of owner or lessee, phone number of the owner or lessee, and the value of the construction debt allocated to the land.

AUTHORITY FOR MAINTENANCE OF THE SYSTEM:

This system of records is maintained under the authority of 25 U.S.C. 1, 1a, 13; 18 U.S.C. 3055; 25 U.S.C. 480.

ROUTINE USES OF RECORDS MAINTAINED IN THE SYSTEM, INCLUDING CATEGORIES OF USERS AND THE PURPOSES OF SUCH USES:

The primary uses of the records are to bill customers of Indian irrigation operation-and-maintenance and construction projects operated by the BIA, (including individual Indian and non-Indians and private sector parties (businesses)) with costs that are reimbursable to the Federal government, for water supplied by these projects, and to collect debts resulting from unpaid bills.

Disclosure outside the Department of the Interior may be made:

(1) To the Department of the Treasury to recover debts owed to the United States. When a NIIMS account is delinquent for 120 days, it is referred to the Treasury for collection. The information shared with the Treasury includes the tax ID or social security number, the customer name and address, along with the amount of debt owed.

(2)(a) To any of the following entities or individuals, when the circumstances set forth in paragraph (b) are met:

(i) The Department of Justice (DOJ);

(ii) A court, adjudicative or other administrative body;

(iii) A party in litigation before a court or adjudicative or other administrative body; or

(iv) Any DOI employee acting in his or her individual capacity if DOI or DOJ has agreed to represent that employee or pay for private representation of the employee;

(b) When:

(i) One of the following is a party to the proceeding or has an interest in the proceeding:

(A) DOI or any component of DOI;

(B) Any other Federal agency appearing before the Office of Hearings and Appeals;

(C) Any DOI employee acting in his or her official capacity;

(D) Any DOI employee acting in his or her individual capacity if DOI or DOJ has agreed to represent that employee or pay for private representation of the employee;

(E) The United States, when DOJ determines that DOI is likely to be affected by the proceeding; and

(ii) DOI deems the disclosure to be:

(A) Relevant and necessary to the proceeding; and

(B) Compatible with the purposes for which the records were compiled.

(3) To a congressional office in response to a written inquiry that an individual covered by the system, or the heir of such individual if covered individual is deceased, has made to the office.

(4) To any criminal, civil, or regulatory law enforcement authority (whether Federal, State, territorial, local, tribal, or foreign) when a record, either alone or in conjunction with other information, indicates a violation or potential violation of law—criminal, civil, or regulatory in nature, and the disclosure is compatible with the purpose for which the records were compiled.

(5) To an official of another Federal agency to provide information needed in the performance of official duties related to reconciling or reconstructing data files or to enable that agency to respond to an inquiry by the individual to whom the record pertains.

(6) To Federal, State, territorial, local, tribal, or foreign agencies that have requested information relevant or necessary to the hiring, firing, or retention of an employee or contractor, or the issuance of a security clearance, license, contract, grant, or other benefit, when the disclosure is compatible with the purpose of which the records were compiled.

(7) To representatives of the National Archives and Records Administration to conduct records management inspections under the authority of 44 U.S.C. 2904 and 2906.

(8) To State and local governments and tribal organizations to provide information needed in response to court order and/or discovery purposes related to litigation, when the disclosure is compatible with the purpose for which the records were compiled.

(9) To an expert, consultant, or contractor (including employees of the contractor) of DOI that performs services requiring access to these records on DOI's behalf to carry out the purposes of the system.

(10) The appropriate agencies, entities, and persons when:

(a) It is suspected or confirmed that the security or confidentiality of information in the system of records has been compromised; and

(b) The Department has determined that as a result of the suspected or confirmed compromise there is a risk of harm to economic or property interest, identity theft, or fraud, or harm to the security or integrity of this system or other systems or programs (whether maintained by the Department or another agency or entity) that rely upon the compromised information; and

(c) The disclosure is made of such agencies, entities, and persons who are reasonably necessary to assist in connection with the Department's efforts to respond to the suspected or confirmed compromise and prevent, minimize, or remedy such harm.

(11) To the Office of Management and Budget during the coordination and clearance process in connection with legislative affairs as mandated by OMB Circular A–19.

(12) To the news media when the disclosure is compatible with the purpose for which the records were compiled.

(13) To owners of land on which Indian irrigation projects are constructed, operated and maintained (including individual Indian and non-Indians and private sector parties (businesses)) to verify the payment received.

DISCLOSURES TO CONSUMER REPORTING AGENCIES:

Pursuant to 5 U.S.C. 552a(b)(12), records can be disclosed to consumer reporting agencies as they are defined by the Fair Credit Reporting Act (15 U.S.C. 1681a(f)) or the Federal Claims Collection Act of 1966 (31 U.S.C. 3701(a)(3)).

POLICIES AND PRACTICES FOR STORING, RETRIEVING, ACCESSING, RETAINING, AND DISPOSING OF RECORDS IN THE SYSTEM:

STORAGE:

Records are stored on paper in a locked office or secured desk or cabinet, and in electronic form on hard disks and magnetic tapes.

RETRIEVABILITY:

Customer records are retrieved by name or customer ID number (if assigned). Ownership information is retrieved by owner name, unit serial number, or owner ID number (if assigned). Land information is retrieved by unit serial number.

SAFEGUARDS:

NIIMS is maintained with controls meeting safeguard requirements identified in Departmental Privacy Act Regulations (43 CFR 2.51) for manual and automated records. Access to records is limited to authorized personnel whose official duties require such access.

(1) *Physical Security:* Paper or electronic format records are maintained in locked file cabinets and/or in secured rooms.

(2) *Technical Security:* Electronic records are maintained in conformity

with Office of Management and Budget and Departmental guidelines reflecting the implementation of the Federal Information Security Management Act. Electronic data are protected through user identification, passwords, database permissions, and software controls. These security measures establish different degrees of access for different types of users. An audit trail is maintained and reviewed periodically to identify unauthorized access. A Privacy Impact Assessment was completed for the NIIMS and is updated at least annually to ensure that Privacy Act requirements and personally identifiable information safeguard requirements are met.

(3) *Administrative Security:* All DOI and contractor employees with access to NIIMS are required to complete Privacy Act, Records Management Act, and Security Training.

RETENTION AND DISPOSAL:

Records relating to individuals covered by this system are retained in accordance with the Bureau of Indian Affairs Manual (BIAM), approved by the National Archives and Records Administration (NARA), and are scheduled for permanent retention.

SYSTEM MANAGER(S) AND ADDRESS:

Financial Specialist, Division of Irrigation, Power, and Safety of Dams, Office of Trust Services, Bureau of Indian Affairs, 911 NE 11th Avenue, Portland, OR 97232.

NOTIFICATION PROCEDURES:

Inquiries regarding the existence of records should be addressed to the System Manager. The request must be in writing, signed by the requester, and meet the requirements of 43 CFR 2.60.

RECORDS ACCESS PROCEDURES:

A request for access may be addressed to the System Manager. The request must be in writing, signed by the requester, and meet the requirements of 43 CFR 2.63.

CONTESTING RECORD PROCEDURES:

A petition for amendment should be addressed to the System Manager. The request must be in writing, signed by the requester, and meet the content requirements of 43 CFR 2.71.

RECORD SOURCE CATEGORIES:

Source information includes information taken from individuals, information manually extracted from other in-house BIA records such as realty and probate records, information from county assessors and title companies, information from tribal documents, information collected from the Department of the Treasury, and information extracted from native allotment files by authorized BIA employees.

EXEMPTIONS CLAIMED FOR THE SYSTEM:

None.

[FR Doc. E8–16101 Filed 7–14–08; 8:45 am]

BILLING CODE 4312–RY–P

DEPARTMENT OF THE INTERIOR

Bureau of Indian Affairs

Privacy Act of 1974, as Amended; Establishment of a New System of Records

AGENCY: Bureau of Indian Affairs, Interior.

ACTION: Notice of addition of a new system of records.

SUMMARY: The Department of the Interior (DOI), Bureau of Indian Affairs (BIA) is issuing public notice, pursuant to the Privacy Act of 1974 (5 U.S.C. 552a), of its intent to add a new Privacy Act system of records to its inventory of records systems subject to the Privacy Act of 1974 (5 U.S.C. 552a). This action is necessary to meet the requirements of the Privacy Act to publish in the **Federal Register** notice of the existence and character of records systems maintained by the agency (5 U.S.C. 552a(e)(4)). The new Privacy Act system of records is entitled ''Interior BIA–28: Alaska Title Plant Database System (AKTitle)''.

DATES: Comments must be received by August 25, 2008.

ADDRESSES: Any persons interested in commenting on this proposed amendment may do so by submitting comments in writing to the Privacy Act Officer, Bureau of Indian Affairs, 625 Herndon Parkway, Herndon, VA 20170, or by e-mail to *Joan.Tyler@bia.gov.*

FOR FURTHER INFORMATION CONTACT: Vicki Forrest, Deputy Bureau Director, Office of Trust Services, 1849 C Street, NW., Washington. DC 20240, or by e-mail to *vicki.forrest@bia.gov.*

SUPPLEMENTARY INFORMATION: This notice is published pursuant to the Privacy Act of 1974 (5 U.S.C. 552a(e)(4)) and is in exercise of authority delegated by the Secretary of the Interior to the Assistant Secretary—Indian Affairs in 209 DM 8.1. This notice establishes the Privacy Act System of Records entitled Interior, BIA–28, ''AKTitle.''

The purpose of this system is to maintain a single database of records related to individual Indians enrolled in Alaska Native corporations and their heirs. The existence of one consolidated database allows Alaska Title Plant and Probate personnel to quickly and accurately locate records in order to verify real estate holdings.

Dated: July 9, 2008.

George T. Skibine,

Acting Deputy Assistant Secretary, Policy and Economic Development.

SYSTEM NAME:

AKTitle—Interior, BIA–28.

SYSTEM LOCATION:

Alaska Title Services Center, 3601 C Street, Suite 1100, Anchorage, AK 99053.

CATEGORIES OF INDIVIDUALS COVERED BY THE SYSTEM:

Individual Indians enrolled in Alaska Native Corporations and heirs.

CATEGORIES OF RECORDS IN THE SYSTEM:

- Enrollee information, including name, date of birth, date of death, social security number, Alaska Native Enrollment Number, names of mother and father, Native Corporation to which individual is enrolled, and title ownership; and
- Information on individual real estate holdings, including lot, block, section, township, range, and tract number.

AUTHORITY FOR MAINTENANCE OF THE SYSTEM:

This system of records is maintained under the authority of 36 Stat. 855, 856, 38 Stat. 588, 42 Stat. 1185, 44 U.S.C. 3101 *et seq.*

ROUTINE USES OF RECORDS MAINTAINED IN THE SYSTEM, INCLUDING CATEGORIES OF USERS AND THE PURPOSES OF SUCH USES:

AKTitle is used to manage records of real estate holdings of individual Indians enrolled in Alaska Native corporations. AKTitle shares information with ''Alaska National Interest Lands Conservation Act'' (ANILCA) and Native Allotment Distributions for Alaska Realty and Compact/Contract Offices.

Disclosures outside the Department of the Interior may be made:

(1) To State Offices (primarily Welfare, etc.); the Social Security Office; Indian Health Services; Department of Education; and Alaskan Natives.

(2)(a) To any of the following entities or individuals, when the circumstances set forth in paragraph (b) are met:

(i) The Department of Justice (DOJ);

(ii) A court, adjudicative or other administrative body;

(iii) A party in litigation before a court or adjudicative or other administrative body; or

(iv) Any DOI employee acting in his or her individual capacity if DOI or DOJ

has agreed to represent that employee or pay for private representation of the employee;

(b) When:

(i) One of the following is a party to the proceeding or has an interest in the proceeding:

(A) DOI or any component of DOI;

(B) Any other Federal agency appearing before the Office of Hearings and Appeals;

(C) Any DOI employee acting in his or her official capacity;

(D) Any DOI employee acting in his or her individual capacity if DOI or DOJ has agreed to represent that employee or pay for private representation of the employee;

(E) The United States, when DOJ determines that DOI is likely to be affected by the proceeding; and

(ii) DOI deems the disclosure to be:

(A) Relevant and necessary to the proceeding; and

(B) Compatible with the purposes for which the records were compiled.

(3) To a congressional office in response to a written inquiry that an individual covered by the system, or the heir of such individual if covered individual is deceased, has made to the office.

(4) To any criminal, civil, or regulatory law enforcement authority (whether Federal, State, territorial, local, tribal, or foreign) when a record, either alone or in conjunction with other information, indicates a violation or potential violation of law—criminal, civil, or regulatory in nature, and the disclosure is compatible with the purpose for which the records were compiled.

(5) To an official of another Federal agency to provide information needed in the performance of official duties related to reconciling or reconstructing data files or to enable that agency to respond to an inquiry by the individual to whom the record pertains.

(6) To Federal, State, territorial, local, Alaskan Native, or foreign agencies that have requested information relevant or necessary to the hiring, firing, or retention of an employee or contractor, or the issuance of a security clearance, license, contract, grant, or other benefit, when the disclosure is compatible with the purpose for which the records were compiled.

(7) To representatives of the National Archives and Records Administration to conduct records management inspections under the authority of 44 U.S.C. 2904 and 2906.

(8) To State and local governments and Alaskan Native organizations to provide information needed in response to court order and/or discovery purposes related to litigation, when the disclosure is compatible with the purpose for which the records were compiled.

(9) To an expert, consultant, or contractor (including employees of the contractor) of DOI that performs services requiring access to these records on DOI's behalf to carry out the purposes of the system.

(10) The appropriate agencies, entities, and persons when:

(a) It is suspected or confirmed that the security or confidentiality of information in the system of records has been compromised; and

(b) The Department has determined that as a result of the suspected or confirmed compromise, there is a risk of harm to economic or property interest, identity theft or fraud, or harm to the security or integrity of this system or other systems or programs (whether maintained by the Department or another agency or entity) that rely upon the compromised information; and

(c) The disclosure is made of such agencies, entities, and persons who are reasonably necessary to assist in connection with the Department's efforts to respond to the suspected or confirmed compromise and prevent, minimize, or remedy such harm.

(11) To the Office of Management and Budget during the coordination and clearance process in connection with legislative affairs as mandated by OMB Circular A–19.

(12) To the Department of the Treasury to recover debts owed to the United States.

(13) To the news media when the disclosure is compatible with the purpose for which the records were compiled.

(14) To individual Indians and their heirs to verify their real estate holdings.

DISCLOSURES TO CONSUMER REPORTING AGENCIES:

Pursuant to 5 U.S.C. 552a(b)(12), records can be disclosed to consumer reporting agencies as they are defined by the Fair Credit Reporting Act (15 U.S.C. 1681a(f)) or the Federal Claims Collection Act of 1966 (31 U.S.C. 3701(a)(3)).

POLICIES AND PRACTICES FOR STORING, RETRIEVING, ACCESSING, RETAINING, AND DISPOSING OF RECORDS IN THE SYSTEM:

STORAGE:

Records are stored in both paper and electronic form.

RETRIEVABILITY:

Manual records are indexed by name. Electronic records can be retrieved by name, social security number, date of birth, ID number, names of parents, U.S. Survey Numbers, or land descriptions such as Township or Range.

SAFEGUARDS:

AKTitle is maintained with controls meeting safeguard requirements identified in Departmental Privacy Act Regulations (43 CFR 2.51) for manual and automated records. Access to records is limited to authorized personnel whose official duties require such access; agency officials have access only to records pertaining to their agencies.

(1) *Physical Security:* Paper or electronic format records are maintained in locked file cabinets and/or in secured rooms.

(2) *Technical Security:* Electronic records are maintained in conformity with Office of Management and Budget and Departmental guidelines reflecting the implementation of the Federal Information Security Management Act. Electronic data are protected through user identification, passwords, database permissions, and software controls. These security measures establish different degrees of access for different types of users. An audit trail is maintained and reviewed periodically to identify unauthorized access. A Privacy Impact Assessment was completed for AKTitle and is updated at least annually to ensure that Privacy Act requirements and personally identifiable information safeguard requirements are met.

(3) *Administrative Security:* All DOI and contractor employees with access to AKTitle are required to complete Privacy Act, Records Management Act, and Security Training.

RETENTION AND DISPOSAL:

Records relating to individuals covered by this system are retained in accordance with the 16 Bureau of Indian Affairs Manual (BIAM), as approved by the National Archives and Records Administration, and are scheduled for permanent retention.

SYSTEM MANAGER AND ADDRESS:

Deputy Bureau Director, Office of Trust Services, 1849 C Street, NW., Washington, DC 20240.

NOTIFICATION PROCEDURES:

Inquiries regarding the existence of records should be addressed to the System Manager. The request must be in writing, signed by the requester, and meet the requirements of 43 CFR 2.60.

RECORD ACCESS PROCEDURES:

A request for access should be addressed to the System Manager. The request must be in writing, signed by

the requester, and meet the requirements of 43 CFR 2.63.

CONTESTING RECORD PROCEDURES:

A petition for amendment should be addressed to the System Manager. The request must be in writing, signed by the requester, and meet the content requirements of 43 CFR 2.71.

RECORD SOURCE CATEGORIES:

Source information is received from Probate files, Native Allotment files, the Bureau of Vital Statistics, the Regional Solicitor, and decisions from the Office of Hearings and Appeals. Information was collected from the public for the Vietnam Veterans Allotment Act.

EXEMPTIONS CLAIMED FOR THE SYSTEM:

None.

[FR Doc. E8–16102 Filed 7–14–08; 8:45 am]

BILLING CODE 4312–RY–P

DEPARTMENT OF THE INTERIOR

Bureau of Indian Affairs

Privacy Act of 1974, as Amended; Amendment of an Existing System of Records

AGENCY: Bureau of Indian Affairs (BIA), Interior.

ACTION: Proposed amendment of an existing system of records.

SUMMARY: The Department of the Interior (DOI), Bureau of Indian Affairs (BIA) is issuing public notice, pursuant to the Privacy Act of 1974 (5 U.S.C. 552a), of its intent to amend its existing Privacy Act system of records notice entitled Interior, BIA–22, ''Indian Student Records,'' published at 55 FR 34085 (August 21, 1990).

DATE: Comments must be received by August 25, 2008.

ADDRESSES: Any persons interested in commenting on the amended system of records may do so by submitting comments in writing to the Privacy Act Officer, Bureau of Indian Affairs, 625 Herndon Parkway, Herndon, VA 20170, or by e-mail to *Joan.Tyler@bia.gov.*

FOR FURTHER INFORMATION CONTACT: Kevin Skenandore, Acting Director, Bureau of Indian Education (BIE), 1849 C Street, NW., MIB MS 3609, Washington, DC 20245, or by e-mail to *Kevin.Skenandore@bia.gov.*

SUPPLEMENTARY INFORMATION: This notice is published pursuant to the Privacy Act of 1974 (5 U.S.C. 552a(e)(4)) and is in exercise of authority delegated by the Secretary of the Interior to the Assistant Secretary—Indian Affairs, in 209 DM 8.1. This notice amends the Privacy Act System of Records entitled Interior, BIA–22, ''Indian Student Records.'' The purpose of the amendment is to: (1) Change the name of the system from Interior, BIA–22, ''Indian Student Records'' to Interior, BIA–22, ''Native American Student Information System'' (NASIS) (2) update the addresses of the system locations, system managers, and the categories of individuals covered by the system statement; (3) update the information regarding disclosures outside the Department of the Interior; (4) update the information on student records; (5) update the routine uses, storage, retrievability and safeguards statements to incorporate the changes since the system notice was last published, and (6) expand the existing system of records to include information necessary to generate the reports the Bureau of Indian Education produces annually to meet the various requirements. A copy of the notice, with changes incorporated, is attached.

Dated: July 9, 2008.

George T. Skibine,

Acting Deputy Assistant Secretary, Policy and Economic Development.

SYSTEM NAME:

Native American Student Information System (NASIS), Interior, BIA–22.

SYSTEM LOCATION:

(1) Bureau of Indian Education (BIE) Central Office, 1849 C Street, NW., MS 3609, Washington, DC 20240.

(2) Bureau of Indian Affairs (BIA) Albuquerque Data Center, 1011 Indian School Road, NW, Albuquerque, NM 87104.

(3) Infinite Campus, 2 Pine Tree Drive, Suite 302, Arden Hills, MN 55112.

(4) BIE-specific school locations. For a listing of specific locations, contact the Systems Manager.

CATEGORIES OF INDIVIDUALS COVERED BY THE SYSTEM:

- All students who attend BIE-funded primary and secondary schools;
- All education staff who work at BIE-funded primary and secondary schools, including school administrators, principals, registrars, school clerks, teachers, teacher aides, counselors, school bus drivers (for certifications), janitorial staff, food service staff, school complex security staff, and dormitory staff; and
- Parents or guardians of, and emergency or authorized contacts for, students attending BIE-funded primary and secondary schools.

CATEGORIES OF RECORDS IN THE SYSTEM:

- School staff information including, but not limited to, staff ID number, qualifications for staff position, school district of employment and school district assignments, home address, home phone number, and e-mail address;
- Student information including name, birth date, address, phone number, e-mail address, student ID information, student photo, school, residential enrollment, free or reduced meal status, and household census information;
- Student tribal affiliation, tribal certificate type, and validation of tribal membership;
- Student contact information including contact information for parents or guardians or other parties to contact in an emergency, and relationships of students to emergency contacts;
- Records documenting student behavior including information on behavior problems and the resolution of the problems;
- Transcripts, test scores, grades, education level, classes available, class scheduling, special education data, gifted and talented data, instructional and residential attendance;
- School bus transportation data;
- Languages spoken by students, level of English proficiency, indigenous Indian languages spoken, and preferred language;
- Immunization records of students, health conditions of students and other information pertaining to student health, including treatments for health problems.

AUTHORITY FOR MAINTENANCE OF THE SYSTEM:

This system of records is maintained under the authority of 25 U.S.C. 1, 1a, 13; 25 U.S.C. 480; Public Law 95–561 and subsequent amendments; 25 CFR parts 31, 36, and 39; the Snyder Act (25 U.S.C. 13); Johnson O'Malley Act (codified as amended, 25 U.S.C. 452 (2000)); Elementary and Secondary Education Act (20 U.S.C. 6301); Tribally Controlled Schools Act (25 U.S.C. 2501 *et seq.*); Indian Self-Determination and Education Assistance Act (25 U.S.C. 450); Indian Education Amendments of 1978 (25 U.S.C. 2001 *et seq.*); Individuals with Disabilities Education Act (IDEA) (20 U.S.C. 1400 *et seq.*); Improving America's Schools Act (Pub. L. 103–382); and the No Child Left Behind Act of 2002 (NCLBA) (Pub. L. 107–110).

ROUTINE USES OF RECORDS MAINTAINED IN THE SYSTEM, INCLUDING CATEGORIES OF USERS AND THE PURPOSE OF SUCH USES:

The system is used to administer BIE-funded schools by providing high quality data to legitimate users. NASIS serves as the BIE's primary tracking and reporting system for students attending BIE-funded schools and for duty certifications of employees at such schools.

Disclosure outside the Department of the Interior may be made:

(1) To Congress in the form of Indian Student Equalization Program (ISEP) reports to justify ISEP funding for Indian schools.

(2) To the Department of Education in the form of Consolidated School Reports to satisfy accountability requirements of NCLBA.

(3) To the Department of Education in the form of Annual Performance Reports to satisfy accountability requirements of the IDEA.

(4) To parents and guardians of students in the form of web-enabled access to grades, assignments, attendance, behavior, schedule, and school calendar for their student.

(5) To parents and guardians of students in the form of periodic reports on their student(s).

(6) To State education departments in the form of bio-grid data for assessment access for students within that State for the purpose of fulfilling accountability requirements under NCLBA.

(7) To State education departments in the form of attendance and graduation rate data for students within that State for the purpose of fulfilling accountability requirements under NCLBA.

(8) To an authorized recipient such as a parent, medical facility, service provider, or school to which the student is transferring, in the form of a data package containing information about the student to enable the recipient to provide services to the student, following the guidelines of the IDEA for special education students, or privacy policies for DOI and Family Education Rights and Privacy Act (FERPA) for all other students.

(9) To the public in the form of school report cards as required by NCLBA.

(10) To individual requestors in accordance with the requirements of FERPA and Freedom of Information Act (FOIA).

(11) To schools receiving grants from or under contract to the BIE.

(12)(a) To any of the following entities or individuals, when the circumstances set forth in paragraph (b) are met:

(i) The Department of Justice (DOJ);

(ii) A court, adjudicative or other administrative body;

(iii) A party in litigation before a court or adjudicative or other administrative body; or

(iv) Any DOI employee acting in his or her individual capacity if DOI or DOJ has agreed to represent that employee or pay for private representation of the employee;

(b) When:

(i) One of the following is a party to the proceeding or has an interest in the proceeding:

(A) DOI or any component of DOI;

(B) Any other Federal agency appearing before the Office of Hearings and Appeals;

(C) Any DOI employee acting in his or her official capacity;

(D) Any DOI employee acting in his or her individual capacity if DOI or DOJ has agreed to represent that employee or pay for private representation of the employee;

(E) The United States, when DOJ determines that DOI is likely to be affected by the proceeding; and

(ii) DOI deems the disclosure to be:

(A) Relevant and necessary to the proceeding; and

(B) Compatible with the purposes for which the records were compiled.

(13) To a congressional office in response to a written inquiry that an individual covered by the system, or the heir of such individual if covered individual is deceased, has made to the office.

(14) To any criminal, civil, or regulatory law enforcement authority (whether Federal, State, territorial, local, tribal, or foreign) when a record, either alone or in conjunction with other information, indicates a violation or potential violation of law—criminal, civil, or regulatory in nature, and the disclosure is compatible with the purpose for which the records were compiled.

(15) To an official of another Federal agency to provide information needed in the performance of official duties related to reconciling or reconstructing data files or to enable that agency to respond to an inquiry by the individual to whom the record pertains.

(16) To Federal, State, territorial, local, tribal, or foreign agencies that have requested information relevant or necessary to the hiring, firing, or retention of an employee or contractor, or the issuance of a security clearance, license, contract, grant, or other benefit, when the disclosure is compatible with the purpose for which the records were compiled.

(17) To representatives of the National Archives and Records Administration to conduct records management inspections under the authority of 44 U.S.C. 2904 and 2906.

(18) To state and local governments and tribal organizations to provide information needed in response to court order and/or discovery purposes related to litigation, when the disclosure is compatible with the purpose for which the records were compiled.

(19) To an expert, consultant, or contractor (including employees of the contractor) of DOI that performs services requiring access to these records on DOI's behalf to carry out the purposes of the system.

(20) The appropriate agencies, entities, and persons when:

(a) It is suspected or confirmed that the security or confidentiality of information in the system of records has been compromised; and

(b) The Department has determined that as a result of the suspected or confirmed compromise there is a risk of harm to economic or property interest, identity theft or fraud, or harm to the security or integrity of this system or other systems or programs (whether maintained by the Department or another agency or entity) that rely upon the compromised information; and

(c) The disclosure is made of such agencies, entities, and persons who are reasonably necessary to assist in connection with the Department's efforts to respond to the suspected or confirmed compromise and prevent, minimize, or remedy such harm.

(21) To the Office of Management and Budget during the coordination and clearance process in connection with legislative affairs as mandated by OMB Circular A–19.

(22) To the Department of the Treasury to recover debts owed to the United States.

(23) To the news media when the disclosure is compatible with the purpose for which the records were compiled.

DISCLOSURES TO CONSUMER REPORTING AGENCIES:

Pursuant to 5 U.S.C. 552a(b)(12), records can be disclosed to consumer reporting agencies as they are defined by the Fair Credit Reporting Act (15 U.S.C. 1681a(f)) or the Federal Claims Collection Act of 1966 (31 U.S.C. 3701(a)(3)).

POLICIES AND PRACTICES FOR STORING, RETRIEVING, ACCESSING, RETAINING, AND DISPOSING OF RECORDS IN THE SYSTEM:

STORAGE:

Records are stored in both paper and electronic form. Technical data from audit logs and database queries produced by IT support in Infinite Campus are stored in paper form at this location. Sensitive student records

including grades, attendance records, health, special programs, and behavior information are stored in paper form in locked file cabinets. Electronic records are stored on hard disks.

RETRIEVABILITY:

Records including attendance, grades, discipline information, test and assessment histories, program enrollments, and health information are retrieved from the NASIS using a unique student identification code assigned by the system. Other records for school administrators, principals, teachers, teacher aides, counselors, school bus drivers, line officers, regional directors, system administrators, librarians, food service workers, dormitory managers, and parents/guardian records are retrievable using a unique identifier code assigned by the system for each individual.

SAFEGUARDS:

NASIS is maintained with controls meeting safeguard requirements identified in Departmental Privacy Act Regulations (43 CFR 2.51) for manual and automated records. Access to records is limited to authorized personnel whose official duties require such access; agency officials have access only to records pertaining to their agencies.

(1) *Physical Security:* Paper records are maintained in locked file cabinets and/or in secured rooms.

(2) *Technical Security:* Electronic records are maintained in conformity with Office of Management and Budget and Departmental guidelines reflecting the implementation of the Federal Information Security Management Act. Electronic data are protected through user identification, passwords, database permissions, and software controls. These security measures establish different degrees of access for different types of users. An audit trail is maintained and reviewed periodically to identify unauthorized access. A Privacy Impact Assessment was completed for the NASIS and is updated at least annually to ensure that Privacy Act requirements and personally identifiable information safeguard requirements are met. Security procedures are verified through annual assessments of the applications. The NASIS Security Assessment was last performed 12/19/2006 in accordance with FIPS 200 and NIST 800–53.

(3) *Administrative Security:* All DOI and contractor employees with access to NASIS are required to complete Privacy Act, Records Management Act, and Security Awareness Training.

RETENTION AND DISPOSAL:

Records relating to individuals covered by this system are retained in accordance with the 16 Bureau of Indian Affairs Manual (BIAM), as approved by the National Archives and Records Administration (NARA), and are scheduled for permanent retention.

SYSTEM MANAGER(S) AND ADDRESS:

NASIS COTR and Project Manager, Bureau of Indian Education, 1001 Indian School Road, NW, Suite 219A, Albuquerque, NM 87103

NOTIFICATION PROCEDURES:

Inquiries regarding the existence of records should be addressed to the System Manager. The request must be in writing, signed by the requester, and meet the requirements of 43 CFR 2.60.

RECORDS ACCESS PROCEDURES:

A request for access may be addressed to the System Manager. The request must be in writing, signed by the requester, and meet the requirements of 43 CFR 2.63.

CONTESTING RECORD PROCEDURES:

A petition for amendment should be addressed to the System Manager. The request must be in writing, signed by the requester, and meet the content requirements of 43 CFR 2.71.

RECORD SOURCE CATEGORIES:

Information is received from students attending BIE-funded schools, parents/guardians of students, school administrators, principals, teachers, teacher aides, counselors, school bus drivers, librarians, food service workers, and dormitory managers on whom records are maintained.

EXEMPTIONS CLAIMED FOR THE SYSTEM:

None.

[FR Doc. E8–16103 Filed 7–14–08; 8:45 am]

BILLING CODE 4312–RY–P

DEPARTMENT OF THE INTERIOR

Bureau of Indian Affairs

Privacy Act of 1974, as Amended; Establishment of a New System of Records

AGENCY: Bureau of Indian Affairs, Interior.

ACTION: Notice of addition of a new system of records.

SUMMARY: The Department of the Interior, Bureau of Indian Affairs (BIA) is issuing public notice of its intent to add a new Privacy Act system of records to its inventory of records systems subject to the Privacy Act of 1974 (5 U.S.C. 552). This action is necessary to meet the requirements of the Privacy Act to publish in the **Federal Register** notice of the existence and character of records systems maintained by the agency (5 U.S.C. 552a(e)(4)). The new Privacy Act system of records is entitled Interior, BIA–30, ''Identity Information System'' (IIS).

DATES: Comments must be received by August 25, 2008.

ADDRESSES: Any persons interested in commenting on this new system of records may do so by submitting comments in writing to the Privacy Act Officer, 625 Herndon Parkway, Herndon VA 20170, or by e-mail to *Joan.Tyler@bia.gov.*

FOR FURTHER INFORMATION CONTACT: Nicole Jaber, Director, Division of Independent Validation and Verification, Office of the Chief Information Officer, 625 Herndon Parkway, Herndon, VA 20170, or by e-mail at *Nicole.Jaber@bia.gov.*

SUPPLEMENTARY INFORMATION: This notice is published pursuant to the Privacy Act of 1974 (5 U.S.C. 552a(e)(4)) and is in exercise of authority delegated by the Secretary of the Interior to the Assistant Secretary—Indian Affairs in 209 DM 8.1. This notice establishes the Privacy Act system of records entitled Interior, BIA–30, ''Identity Information System'' (IIS). The purpose of this system is to provide an automated tool to track the security screening of BIA and Assistant Secretary—Indian Affairs (AS–IA) employees and contractors. It enables or allows BIA and AS–IA to record completion of official required IT security training and track requests for access to BIA IT information systems.

Dated: July 9, 2008.

George T. Skibine,

Acting Deputy Assistant Secretary, Policy and Economic Development.

SYSTEM NAME:

Identity Information System (IIS)—Interior, BIA–30.

SYSTEM LOCATION:

Herndon Data Center (HDC), 625 Herndon Parkway, Herndon, VA 20170.

CATEGORIES OF INDIVIDUALS COVERED BY THE SYSTEM:

Those members from the following organizations who require access to BIA IT systems:

(1) Employees and contractors of AS–IA, BIA and the Bureau of Indian Education (BIE)

(2) Office of the Special Trustee for American Indians (OST)

(3) Office of Hearings and Appeals (OHA)

(4) Office of Historical Trust Accounting (OHTA)

(5) Bureau of Land Management (BLM)

(6) Tribal users covered under a 638 Compact/Contract

CATEGORIES OF RECORDS IN THE SYSTEM:

(1) Individual data including the name, title, birth date, Social Security Number, phone number, office name, and office location;

(2) Agency affiliation and status as employee or contractor

(3) Status of required training;

(4) System role based accesses granted to each user;

(5) Building access badge information;

(6) Acceptance date of BIA Rules of Behavior;

(7) Record showing that background status has been confirmed by personnel security;

(8) IT systems for which access has been requested and the status of those requests;

(9) Supervisor or government approver records showing those users whose access or removal request needs to be approved by the supervisor or government approver;

(10) Business owner records showing those users whose access or removal request needs to be approved by the business owner;

(11) System administrator records showing the names of those users whose access needs to be set up or revoked;

(12) Contract Officer Technical Representative (COTR) records showing the names and other data of contract IT users employed on a contract under the administrative support of that COTR.

AUTHORITY FOR MAINTENANCE OF THE SYSTEM:

This system of records is maintained under the authority of 25 U.S.C. 1, 1a, 13; 25 U.S.C. 480.

ROUTINE USES OF RECORDS MAINTAINED IN THE SYSTEM, INCLUDING CATEGORIES OF USERS AND THE PURPOSES OF SUCH USES:

The system is used to record and manage contact, training, and security screening information about BIA and AS–IA employees and contractors; and to manage access by BIA and AS–IA employees and contractors to BIA information systems.

Disclosure(s) outside the Department of the Interior may be made:

(1) (a) To any of the following entities or individuals, when the circumstances set forth in paragraph (b) are met:

(i) The Department of Justice (DOJ);

(ii) A court, adjudicative or other administrative body;

(iii) A party in litigation before a court or adjudicative or other administrative body; or

(iv) Any DOI employee acting in his or her individual capacity if DOI or DOJ has agreed to represent that employee or pay for private representation of the employee;

(b) When:

(i) One of the following is a party to the proceeding or has an interest in the proceeding:

(A) DOI or any component of DOI;

(B) Any other Federal agency appearing before the Office of Hearings and Appeals;

(C) Any DOI employee acting in his or her official capacity;

(D) Any DOI employee acting in his or her individual capacity if DOI or DOJ has agreed to represent that employee or pay for private representation of the employee;

(E) The United States, when DOJ determines that DOI is likely to be affected by the proceeding; and

(ii) DOI deems the disclosure to be:

(A) Relevant and necessary to the proceeding; and

(B) Compatible with the purposes for which the records were compiled.

(2) To a congressional office in response to a written inquiry that an individual covered by the system, or the heir of such individual if covered individual is deceased, has made to the office.

(3) To any criminal, civil, or regulatory law enforcement authority (whether Federal, State, territorial, local, tribal, or foreign) when a record, either alone or in conjunction with other information, indicates a violation or potential violation of law—criminal, civil, or regulatory in nature, and the disclosure is compatible with the purpose for which the records were compiled.

(4) To an official of another Federal agency to provide information needed in the performance of official duties related to reconciling or reconstructing data files or to enable that agency to respond to an inquiry by the individual to whom the record pertains.

(5) To Federal, State, territorial, local, tribal, or foreign agencies that have requested information relevant or necessary to the hiring, firing, or retention of an employee or contractor, or the issuance of a security clearance, license, contract, grant, or other benefit, when the disclosure is compatible with the purpose for which the records were compiled.

(6) To representatives of the National Archives and Records Administration to conduct records management inspections under the authority of 44 U.S.C. 2904 and 2906.

(7) To State and local governments and tribal organizations to provide information needed in response to court order and/or discovery purposes related to litigation, when the disclosure is compatible with the purpose for which the records were compiled.

(8) To an expert, consultant, or contractor (including employees of the contractor) of DOI that performs services requiring access to these records on DOI's behalf to carry out the purposes of the system.

(9) The appropriate agencies, entities, and persons when:

(a) It is suspected or confirmed that the security or confidentiality of information in the system of records has been compromised; and

(b) The Department has determined that as a result of the suspected or confirmed compromise there is a risk of harm to economic or property interest, identity theft or fraud, or harm to the security or integrity of this system or other systems or programs (whether maintained by the Department or another agency or entity) that rely upon the compromised information; and

(c) The disclosure is made of such agencies, entities, and persons who are reasonably necessary to assist in connection with the Department's efforts to respond to the suspected or confirmed compromise and prevent, minimize, or remedy such harm.

(10) To the Office of Management and Budget during the coordination and clearance process in connection with legislative affairs as mandated by OMB Circular A–19.

(11) To the Department of the Treasury to recover debts owed to the United States.

(12) To the news media when the disclosure is compatible with the purpose for which the records were compiled.

DISCLOSURES TO CONSUMER REPORTING AGENCIES:

Pursuant to 5 U.S.C. 552a(b)(12), records can be disclosed to consumer reporting agencies as they are defined by the Fair Credit Reporting Act (15 U.S.C. 1681a(f)) or the Federal Claims Collection Act of 1966 (31 U.S.C. 3701(a)(3)).

POLICIES AND PRACTICES FOR STORING, RETRIEVING, ACCESSING, RETAINING, AND DISPOSING OF RECORDS IN THE SYSTEM:

STORAGE:

Records are stored on network storage devices, (*e.g.*, hard disks, magnetic tapes) and on paper.

RETRIEVABILITY:

IIS users view their own data by signing onto IIS with their user name and password. Additional access to data

is role based. For example, supervisors and COTRs can see the data of those for whom they are responsible, and IIS system administrators can see the data for all users in the system.

SAFEGUARDS:

IIS is maintained with controls meeting safeguard requirements identified in Departmental Privacy Act Regulations (43 CFR 2.51) for manual and automated records. Access to records is limited to authorized personnel whose official duties require such access; agency officials have access only to records pertaining to their agencies.

(1) *Physical Security:* Paper or electronic format records are maintained in locked file cabinets and/or in secured rooms.

(2) *Technical Security:* Electronic records are maintained in conformity with Office of Management and Budget and Departmental guidelines reflecting the implementation of the Federal Information Security Management Act. Electronic data are protected through user identification, passwords, database permissions, and software controls. These security measures establish different degrees of access for different types of users. An audit trail is maintained and reviewed periodically to identify unauthorized access. A Privacy Impact Assessment was completed for the IIS and is updated at least annually to ensure that Privacy Act requirements and personally identifiable information safeguard requirements are met.

(3) *Administrative Security:* All DOI and contractor employees with access to IIS are required to complete Privacy Act, Records Management Act, and Security Awareness Training.

RETENTION AND DISPOSAL:

Records relating to individuals covered by this system are retained in accordance with the 16 Bureau of Indian Affairs Manual (BIAM), as approved by the National Archives and Records Administration, and scheduled for permanent retention.

SYSTEM MANAGER AND ADDRESS:

Director, Office of Information Operations (OIO), Office of the Chief Information Officer, 625 Herndon Parkway, Herndon, VA 20170.

NOTIFICATION PROCEDURES:

Inquiries regarding the existence of records should be addressed to the System Manager. The request must be in writing, signed by the requester, and meet the requirements of 43 CFR 2.60.

RECORDS ACCESS PROCEDURES:

A request for access may be addressed to the System Manager. The request must be in writing, signed by the requester, and meet the requirements of 43 CFR 2.63.

CONTESTING RECORD PROCEDURES:

A petition for amendment should be addressed to the System Manager. The request must be in writing, signed by the requester, and meet the content requirements of 43 CFR 2.71.

RECORD SOURCE CATEGORIES:

Individuals on whom the records are maintained providing information on themselves, managers issuing approvals for system access requests, IT technicians reporting status of IT system access requests, and personnel security officers reporting verification of background investigations.

EXEMPTIONS CLAIMED FOR THE SYSTEM:

None.

[FR Doc. E8–16104 Filed 7–14–08; 8:45 am]

BILLING CODE 4312–RY–P

DEPARTMENT OF THE INTERIOR

Bureau of Indian Affairs

Privacy Act of 1974, as Amended; Addition of a New System of Records

AGENCY: Bureau of Indian Affairs, Interior.

ACTION: Notice of addition of a new system of records.

SUMMARY: The Department of the Interior (DOI), Bureau of Indian Affairs (BIA) is issuing public notice of its intent to add a new Privacy Act system of records to its inventory of records systems subject to the Privacy Act of 1974 (5 U.S.C. 552a). This action is necessary to meet the requirements of the Privacy Act to publish in the **Federal Register** notice of the existence and character of records systems maintained by the agency (5 U.S.C. 552a(e)(4)). The new Privacy Act system of records is entitled Interior, BIA–29: ''Fee to Trust Tracking System'' (FTTS).

DATE: Comments must be received by August 25, 2008.

ADDRESSES: Any persons interested in commenting on this proposed amendment may do so by submitting comments in writing to the Privacy Act Officer, Bureau of Indian Affairs, 625 Herndon Parkway, Herndon, VA 20170, or by e-mail to *Joan.Tyler@bia.gov.*

FOR FURTHER INFORMATION CONTACT: Vicki Forrest, Deputy Bureau Director, Office of Trust Services, 1849 C Street, NW., Washington, DC 20240, or by e-mail at *Vicki.Forrest@bia.gov.*

SUPPLEMENTARY INFORMATION: This notice is published pursuant to the Privacy Act of 1974 (5 U.S.C. 552a(e)(4)) and is in exercise of authority delegated by the Secretary of the Interior to the Principal Deputy Assistant Secretary—Indian Affairs in 209 DM 8.1. This notice establishes the Privacy Act system of records entitled Interior, BIA–29: ''Fee to Trust Tracking System'' (FTTS).

FTTS was developed for the BIA to track applications for conversions of land from fee ownership into trust status for Tribes and individual Indians. FTTS is replacing an existing legacy system, Fee to Trust (FTT), that does not collect sufficient information to properly track applications.

Dated: July 9, 2008.

George T. Skibine,

Acting Deputy Assistant Secretary for Policy and Economic Development—Indian Affairs.

SYSTEM NAME:

Fee to Trust Tracking System (FTTS), Interior, BIA–29.

SYSTEM LOCATION:

Office of Information Operations, Bureau of Indian Affairs, 625 Herndon Parkway, Herndon, VA 20170.

CATEGORIES OF INDIVIDUALS COVERED BY THE SYSTEM:

(1) Individuals applying to the Department of the Interior (DOI) for conversion of land from fee ownership into trust status.

(2) Individuals, Tribes, organizations or other stakeholders or their representatives with an interest in applications for converting land from fee ownership into trust status.

(3) DOI employees or contractors who process the applications for conversion of land from fee ownership into trust status if their contact information is required.

CATEGORIES OF RECORDS IN THE SYSTEM:

(1) Statistical information necessary to improve and streamline the process, as well as, budget preparatory information to support the entire transfer of fee simple land into trust lands for tribes and individual Indians.

(2) Information required by the trust fee lands transfer case packet application, including but not limited to, a legal description of the trust fee land packet, and the name, phone number and address of the party (or parties) filing the application.

(3) Legal representation information pertaining to the trust fee lands transfer packet application, including but not

limited to the name, phone number, and business address, of the lawyers representing the party (or parties) filing the application.

(4) Case management information for each packet, including but not limited to trust fee land packet number, documents required for the processing of the trust fee land transfer, and Tribal consensual information.

(5) Information pertaining to the status of the packet with respect to the steps required to transfer fee simple land into trust land for tribes and individual Indians.

AUTHORITY FOR MAINTENANCE OF THE SYSTEM:

5 U.S.C. 552; 5 U.S.C. 552A; 5 U.S.C. 301; 43 U.S.C. 1457; and 44 U.S.C. 3101 *et seq.* authorize the Department of the Interior to maintain this system of records.

ROUTINE USES OF RECORDS MAINTAINED IN THE SYSTEM, INCLUDING CATEGORIES OF USERS AND THE PURPOSES OF SUCH USES:

FTTS is used primarily to track applications for conversions of land from fee simple ownership into trust status for Tribes and individual Indians.

Disclosure outside the Department of the Interior may be made:

(1) (a) To any of the following entities or individuals, when the circumstances set forth in paragraph (b) are met:

(i) The Department of Justice (DOJ);

(ii) A court, adjudicative or other administrative body;

(iii) A party in litigation before a court or adjudicative or other administrative body; or

(iv) Any DOI employee acting in his or her individual capacity if DOI or DOJ has agreed to represent that employee or pay for private representation of the employee;

(b) When:

(i) One of the following is a party to the proceeding or has an interest in the proceeding:

(A) DOI or any component of DOI;

(B) Any other Federal agency appearing before the Office of Hearings and Appeals;

(C) Any DOI employee acting in his or her official capacity;

(D) Any DOI employee acting in his or her individual capacity if DOI or DOJ has agreed to represent that employee or pay for private representation of the employee;

(E) The United States, when DOJ determines that DOI is likely to be affected by the proceeding; and

(ii) DOI deems the disclosure to be:

(A) Relevant and necessary to the proceeding; and

(B) Compatible with the purposes for which the records were compiled.

(2) To a congressional office in response to a written inquiry that an individual covered by the system, or the heir of such individual if covered individual is deceased, has made to the office.

(3) To any criminal, civil, or regulatory law enforcement authority (whether federal, State, territorial, local, tribal, or foreign) when a record, either alone or in conjunction with other information, indicates a violation or potential violation of law—criminal, civil, or regulatory in nature, and the disclosure is compatible with the purpose for which the records were compiled.

(4) To an official of another Federal agency to provide information needed in the performance of official duties related to reconciling or reconstructing data files or to enable that agency to respond to an inquiry by the individual to whom the record pertains.

(5) To Federal, State, territorial, local, tribal, or foreign agencies that have requested information relevant or necessary to the hiring, firing, or retention of an employee or contractor, or the issuance of a security clearance, license, contract, grant, or other benefit, when the disclosure is compatible with the purpose for which the records were compiled.

(6) To representatives of the National Archives and Records Administration to conduct records management inspections under the authority of 44 U.S.C. 2904 and 2906.

(7) To State and local governments and tribal organizations to provide information needed in response to court order and/or discovery purposes related to litigation, when the disclosure is compatible with the purpose for which the records were compiled.

(8) To an expert, consultant, or contractor (including employees of the contractor) of DOI that performs services requiring access to these records on DOI's behalf to carry out the purposes of the system.

(9) The appropriate agencies, entities, and persons when:

(a) It is suspected or confirmed that the security or confidentiality of information in the system of records has been compromised; and

(b) The Department has determined that as a result of the suspected or confirmed compromise there is a risk of harm to economic or property interest, identity theft or fraud, or harm to the security or integrity of this system or other systems or programs (whether maintained by the Department or another agency or entity) that rely upon the compromised information; and

(c) The disclosure is made of such agencies, entities, and persons who are reasonably necessary to assist in connection with the Department's efforts to respond to the suspected or confirmed compromise and prevent, minimize, or remedy such harm.

(10) To the Office of Management and Budget during the coordination and clearance process in connection with legislative affairs as mandated by OMB Circular A–19.

(11) To the Department of the Treasury to recover debts owed to the United States.

(12) To the news media when the disclosure is compatible with the purpose for which the records were compiled.

DISCLOSURE TO CONSUMER REPORTING AGENCIES:

Pursuant to 5 U.S.C. 552a(b)(12), records can be disclosed to consumer reporting agencies as they are defined by the Fair Credit Reporting Act (15 U.S.C. 1681a(f)) or the Federal Claims Collection Act of 1966 (31 U.S.C. 3701(a)(3)).

POLICIES AND PRACTICES FOR STORING, RETRIEVING, ACCESSING, RETAINING, AND DISPOSING OF RECORDS IN THE SYSTEM:

STORAGE:

Records are stored in both paper and electronic form.

RETRIEVABILITY:

Both manual and electronic data can be retrieved (by means of a search of electronic indices) by land transfer packet case number, name of party (or parties) filing the application, name of Tribe, property name, assessor's parcel number, or region, state, county and meridian.

SAFEGUARDS:

FTTS is maintained with controls meeting safeguard requirements identified in Departmental Privacy Act Regulations (43 CFR 2.51) for manual and automated records. Access to records is limited to authorized personnel whose official duties require such access; agency officials have access only to records pertaining to their agencies.

(1) *Physical Security:* Paper or electronic format records are maintained in locked file cabinets and/or in secured rooms.

(2) *Technical Security:* Electronic records are maintained in conformity with Office of Management and Budget and Departmental guidelines reflecting the implementation of the Federal Information Security Management Act. Electronic data are protected through

user identification, passwords, database permissions, and software controls. These security measures establish different degrees of access for different types of users. An audit trail is maintained and reviewed periodically to identify unauthorized access. A Privacy Impact Assessment was completed for FTTS and is updated at least annually to ensure that Privacy Act requirements and personally identifiable information safeguard requirements are met.

(3) *Administrative Security:* All DOI and contractor employees with access to FTTS are required to complete Privacy Act, Records Management Act, and Security Training.

RETENTION AND DISPOSAL:

Records relating to individuals covered by this system are retained in accordance with the 16 Bureau of Indian Affairs Manual (BIAM), as approved by the National Archives and Records Administration, and are scheduled for permanent retention.

SYSTEM MANAGER AND ADDRESS:

Deputy Bureau Director, Office of Trust Services, 1849 C Street, NW., Washington, DC 20240.

NOTIFICATION PROCEDURES:

Inquiries regarding the existence of records should be addressed to the System Manager. The request must be in writing, signed by the requester, and meet the requirements of 43 CFR 2.60.

RECORD ACCESS PROCEDURES:

A request for access should be addressed to the System Manager. The request must be in writing, signed by the requester, and meet the requirements of 43 CFR 2.63.

CONTESTING RECORD PROCEDURES:

A petition for amendment should be addressed to the System Manager. The request must be in writing, signed by the requester, and meet the content requirements of 43 CFR 2.71.

RECORD SOURCE CATEGORIES:

Source information is received from individuals on whom the records are maintained, or from legal representatives acting on the behalf of parties filing applications to convert land from fee simple ownership into trust status.

EXEMPTIONS CLAIMED FOR THE SYSTEM:

None.

[FR Doc. E8–16105 Filed 7–14–08; 8:45 am]

BILLING CODE 4312–RY–P

DEPARTMENT OF THE INTERIOR

Bureau of Indian Affairs

Privacy Act of 1974, as Amended; Establishment of a New System of Records

AGENCY: Bureau of Indian Affairs, Interior.

ACTION: Notice of addition of a new system of records.

SUMMARY: The Department of the Interior (DOI), Bureau of Indian Affairs (BIA) is issuing public notice of its intent to add a new Privacy Act system of records to its inventory of records systems subject to the Privacy Act of 1974 (5 U.S.C. 552a). This action is necessary to meet the requirements of the Privacy Act to publish in the **Federal Register** notice of the existence and character of records systems maintained by the agency (5 U.S.C. 552a(e)(4)). This new Privacy Act system of records is entitled Interior, BIA–32, ''Land Consolidation Tracking System'' (LCTS).

DATES: Comments must be received by August 25, 2008.

ADDRESSES: Any persons interested in commenting on this new system of records may do so by submitting comments in writing to the Privacy Act Officer, 625 Herndon Parkway, Herndon, VA 20170, via fax to 703–735–4386, or by e-mail to *Joan.Tyler@bia.gov*.

FOR FURTHER INFORMATION CONTACT: For information regarding Interior, BIA–32, ''Land Consolidation Tracking System'' (LCTS), contact Melissa O'Connor, Program Assistant, BIA, Indian Land Consolidation Center, 721 W. Lakeshore Dr., Ashland, WI, 54806, or by e-mail at *Melissa.O'Connor@bia.gov*.

SUPPLEMENTARY INFORMATION: This notice is published pursuant to the Privacy Act of 1974 (5 U.S.C. 552a(e)(4)) and is in exercise of authority delegated by the Secretary of the Interior to the Assistant Secretary—Indian Affairs in 209 DM 8.1. This notice establishes the Privacy Act system of records entitled Interior, BIA–32, ''Land Consolidation Tracking System'' (LCTS).

The purpose of the LCTS is to provide the Indian Land Consolidation Program (ILCP) with an electronic means of tracking the land sale process. LCTS tracks the land sale process from initiation by the landowner until the sale is complete. The LCTS gives a land owner an updated status report on the sale of his/her land. It also provides the BIA with a means of tracking the paper documents that pertain to the sale and with management reports pertaining to the steps in the land sale process.

Dated: July 9, 2008.

George T. Skibine,

Acting Deputy Assistant Secretary for Policy and Economic Development—Indian Affairs.

SYSTEM NAME:

Land Consolidation Tracking System (LCTS)—Interior, BIA–32.

SYSTEM LOCATION:

Office of the Chief Information Officer, Office of Information Operations, Bureau of Indian Affairs, 625 Herndon Parkway, Herndon, VA 20170.

CATEGORIES OF INDIVIDUALS COVERED BY THE SYSTEM:

(1) Land owners who are sellers and clients of the LCTS process.

(2) Indian Land Consolidation Office (ILCO) staff whose office and work information is used to validate staffing requirements.

CATERGORIES OF RECORDS IN THE SYSTEM:

(1) The name, surname at birth if different from married name (if married), address, telephone number, Social Security Number, tribal enrollment number, gender, date of birth, date of death, mother's maiden name, and father's name of each Indian land owner.

(2) The land owner's fractionated interests by Land Area Code, ownership percentage, number of shares, equivalent acres, and value.

(3) Summaries of land tracts and locations for each individual land holder, location and summary information on the tracts and whether the land has mineral value or not.

(4) The information necessary to track information about the seller and document the interaction with ILCO.

(5) The status of land sales, metrics on the Indian Land Consolidation Act program to help determine the effectiveness of the program.

(6) The time spent and contribution value of support carried out by ILCO personnel in order to track Activity Based Costing Management.

(7) Information on the location of documents generated by the sale process that are needed by the members of the ILCO staff in order to continue a transaction or answer a question.

(8) Names and contact information for ILCO staff, which is used for tracking the land consolidation work and validating the staff requirements.

AUTHORITY FOR MAINTENANCE OF THE SYSTEM:

This system of records is maintained under the authority of 25 U.S.C. 1, 1a, 13; 18 U.S.C. 3055; 25 U.S.C. 480.

ROUTINE USES OF RECORDS MAINTAINED IN THE SYSTEM, INCLUDING CATEGORIES OF USERS AND THE PURPOSES OF SUCH USES:

The LCTS is primarily used to administer the Indian Land Consolidation Program by tracking the land sale process, providing the BIA with a means of tracking the paper documents that pertain to the land sale, and providing the land owner with status reports on the sale of his/her land. LCTS tracks the land sale process from initiation by the landowner until the sale is complete.

Disclosures outside the Department of the Interior may be made:

(1) To Tribes that compact, contract, or enter into cooperative agreements with the BIA.

(2) (a) To any of the following entities or individuals, when the circumstances set forth in paragraph (b) are met:

(i) The Department of Justice (DOJ);

(ii) A court, adjudicative or other administrative body;

(iii) A party in litigation before a court or adjudicative or other administrative body; or

(iv) Any DOI employee acting in his or her individual capacity if DOI or DOJ has agreed to represent that employee or pay for private representation of the employee;

(b) When:

(i) One of the following is a party to the proceeding or has an interest in the proceeding:

(A) DOI or any component of DOI;

(B) Any other Federal agency appearing before the Office of Hearings and Appeals;

(C) Any DOI employee acting in his or her official capacity;

(D) Any DOI employee acting in his or her individual capacity if DOI or DOJ has agreed to represent that employee or pay for private representation of the employee;

(E) The United States, when DOJ determines that DOI is likely to be affected by the proceeding; and

(ii) DOI deems the disclosure to be:

(A) Relevant and necessary to the proceeding; and

(B) Compatible with the purposes for which the records were compiled.

(3) To a congressional office in response to a written inquiry that an individual covered by the system, or the heir of such individual if covered individual is deceased, has made to the office.

(4) To any criminal, civil, or regulatory law enforcement authority (whether Federal, State, territorial, local, tribal, or foreign) when a record, either alone or in conjunction with other information, indicates a violation or potential violation of law—criminal, civil, or regulatory in nature, and the disclosure is compatible with the purpose for which the records were compiled.

(5) To an official of another Federal agency to provide information needed in the performance of official duties related to reconciling or reconstructing data files or to enable that agency to respond to an inquiry by the individual to whom the record pertains.

(6) To Federal, State, territorial, local, tribal, or foreign agencies that have requested information relevant or necessary to the hiring, firing, or retention of an employee or contractor, or the issuance of a security clearance, license, contract, grant, or other benefit, when the disclosure is compatible with the purpose for which the records were compiled.

(7) To representatives of the National Archives and Records Administration to conduct records management inspections under the authority of 44 U.S.C. 2904 and 2906.

(8) To State and local governments and tribal organizations to provide information needed in response to court order and/or discovery purposes related to litigation, when the disclosure is compatible with the purpose for which the records were compiled.

(9) To an expert, consultant, or contractor (including employees of the contractor) of DOI that performs services requiring access to these records on DOI's behalf to carry out the purposes of the system.

(10) The appropriate agencies, entities, and persons when:

(a) It is suspected or confirmed that the security or confidentiality of information in the system of records has been compromised; and

(b) The Department has determined that as a result of the suspected or confirmed compromise there is a risk of harm to economic or property interest, identity theft or fraud, or harm to the security or integrity of this system or other systems or programs (whether maintained by the Department or another agency or entity) that rely upon the compromised information; and

(c) The disclosure is made of such agencies, entities, and persons who are reasonably necessary to assist in connection with the Department's efforts to respond to the suspected or confirmed compromise and prevent, minimize, or remedy such harm.

(11) To the Office of Management and Budget during the coordination and clearance process in connection with legislative affairs as mandated by OMB Circular A–19.

(12) To the Department of the Treasury to recover debts owed to the United States.

(13) To the news media when the disclosure is compatible with the purpose for which the records were compiled.

DISCLOSURES TO CONSUMER REPORTING

Pursuant to 5 U.S.C. 552a(b)(12), records can be disclosed to consumer reporting agencies as they are defined by the Fair Credit Reporting Act (15 U.S.C. 1681a(f)) or the Federal Claims Collection Act of 1966 (31 U.S.C. 3701(a)(3)).

POLICIES AND PRACTICES FOR STORING, RETRIEVING, ACCESSING, RETAINING, AND DISPOSING OF RECORDS IN THE SYSTEM:

STORAGE:

Paper records are maintained in manual form in file folders. Electronic data extracted from title documents pertaining to land owners, land ownership, conveyances, encumbrances, valuation and income, are maintained on electronic media (*e.g.*, tape, disk, and other digital or electronic media.)

RETRIEVABILITY:

Manual records are retrievable by the surname of the land owner. Electronic records are retrievable from LCTS by name, Social Security Number, tribal enrollment number, mother's maiden name, or date of birth.

SAFEGUARDS:

LCTS is maintained with controls meeting safeguard requirements identified in Departmental Privacy Act Regulations (43 CFR 2.51) for manual and automated records. Access to records is limited to authorized personnel whose official duties require such access; agency officials have access only to records pertaining to their agencies.

(1) Physical Security: Paper or electronic format records are maintained in locked file cabinets and/or in secured rooms.

(2) Technical Security: Electronic records are maintained in conformity with Office of Management and Budget and Departmental guidelines reflecting the implementation of the Federal Information Security Management Act. Electronic data is protected through user identification, passwords, database permissions, and software controls. These security measures establish different degrees of access for different types of users. An audit trail is maintained and reviewed periodically to identify unauthorized access. A Privacy Impact Assessment was

completed for LCTS and is updated at least annually to ensure that Privacy Act requirements and personally identifiable information safeguard requirements are met.

(3) Administrative Security: All DOI and contractor employees with access to LCTS are required to complete Privacy Act, Records Management Act, and Security Awareness Training.

RETENTION AND DISPOSAL:

Records relating to individuals covered by this system are retained in accordance with the 16 Bureau of Indian Affairs Manual (BIAM), as approved by the National Archives and Records Administration, and, as such, are scheduled for permanent retention.

SYSTEM MANAGER(S) AND ADDRESS:

Program Assistant, BIA, Indian Land Consolidation Office, 721 W. Lakeshore Dr., Ashland, WI 54806.

NOTIFICATION PROCEDURES:

Inquiries regarding the existence of records should be addressed to the System Manager. The request must be in writing, signed by the requester, and meet requirements of 43 CFR 2.60.

RECORDS ACCESS PROCEDURES:

A request for access should be addressed to the System Manager. The request must be in writing, signed by the requester, and meet the requirements of 43 CFR 2.63.

CONTESTING RECORD PROCEDURES:

A petition for amendment should be addressed to the System Manager. The request must be in writing, signed by the requester, and meet the content requirements of 43 CFR 2.71.

RECORD SOURCE CATEGORIES:

Source information includes information taken from individuals and information manually extracted from other in-house BIA records, such as realty and probate records. Source information also includes county assessor, title company, and tribal documents, and documents collected from the Department of Treasury and from native allotment files.

EXEMPTIONS CLAIMED FOR THE SYSTEM:

None.

[FR Doc. E8–16106 Filed 7–14–08; 8:45 am]

BILLING CODE 4312–RY–P

DEPARTMENT OF THE INTERIOR

Bureau of Land Management

[AZ–220–08–5410–FR–A511; AZA–33799]

Notice of Realty Action: Application for Conveyance of Federal Mineral Interests, Maricopa County, AZ

AGENCY: Bureau of Land Management, Interior.

ACTION: Notice of application.

SUMMARY: The surface owner of the lands described in this notice, aggregating approximately 160 acres, has filed an application for the purchase of the Federally-owned mineral interests in the lands. Publication of this notice temporarily segregates the mineral interest from appropriation under the public land laws, including the mining law.

DATES: Interested persons may submit written comments to the Bureau of Land Management (BLM) at the address stated below. Comments must be received no later than August 29, 2008.

Comments: Before including your address, phone number, e-mail address, or other personal identifying information in your comment, you should be aware that your entire comment—including your personal identifying information—may be made publicly available at any time. If you wish to withhold your name or address from public review or from disclosure under the Freedom of Information Act, you must clearly state this at the beginning of your written comment. While you can ask us in your comment to withhold your personal identifying information from public review, we cannot guarantee that we will be able to do so. The BLM will honor requests for confidentiality on a case-by-case basis to the extent allowed by law. All submissions from organizations or businesses, and from individuals identifying themselves as representatives or officials of organizations or businesses, will be made available for public inspection in their entirety. All persons who wish to present comments, suggestions, or objections in connection with the pending application may do so by writing to Teresa A. Raml, Phoenix District Manager, at the following address.

ADDRESSES: Bureau of Land Management, Phoenix District, 21605 North 7th Avenue, Phoenix, AZ 85027. Detailed information concerning this action, including appropriate environmental information, is available for review at the above address.

FOR FURTHER INFORMATION CONTACT: Matthew Magaletti, Lands and Realty Specialist, at the above address or at 623–580–5590.

SUPPLEMENTARY INFORMATION: The surface owner of the following described lands has filed an application pursuant to section 209 of the Federal Land Policy and Management Act of 1976, 43 U.S.C. 1719(b), for the purchase and conveyance of the Federally-owned mineral interest in the following described lands:

Gila and Salt River Base and Meridian, Yavapai County, Arizona

T. 1 S., R. 3 W.,
Sec. 9, SW¼NE¼, SE¼NW¼, NE¼SW¼, NW¼SE¼.
Total Acres 160.00, more or less.

Effective immediately, the BLM will process the pending application in accordance with the regulations stated in 43 CFR part 2720. Written comments concerning the application must be received no later than the date specified above in this notice. The purpose for a purchase and conveyance is to allow consolidation of surface and subsurface minerals ownership where (1) there are no known mineral values or (2) in those instances where the Federal mineral interest reservation interferes with or precludes appropriate nonmineral development and such development is a more beneficial use of the land than the mineral development.

On July 15, 2008 the mineral interests owned by the United States in the above described lands will be segregated to the extent that they will not be subject to appropriation under the public land laws, including the mining laws. The segregative effect shall terminate upon issuance of a patent or deed of such mineral interest; upon final rejection of the mineral conveyance application; or July 15, 2010, whichever occurs first.

Authority: 43 CFR 2720.1–1(b).

Teresa A. Raml,
District Manager.

[FR Doc. E8–16081 Filed 7–14–08; 8:45 am]

BILLING CODE 4310–32–P

DEPARTMENT OF THE INTERIOR

Bureau of Land Management

[AZ–310–08–1610–DU–241A]

Notice of Intent To Amend the Kingman Resource Area, Resource Management Plan and Associated Environmental Assessment

AGENCY: Bureau of Land Management, Interior.

ACTION: Notice of intent.

SUMMARY: The Bureau of Land Management (BLM) Kingman Field Office, Kingman, Arizona, intends to amend the Kingman Resource Management Plan (RMP) with an associated Environmental Assessment (EA) and by this notice is announcing the start of the public scoping period. The Kingman RMP, approved March 1995, requires amendment in order to designate a Transportation Corridor in response to an Arizona Department of Transportation (ADOT) proposal to realign State Route 95 (SR–95).

DATES: Public scoping comments will be accepted for 30 days from the publication date of this **Federal Register** Notice.

ADDRESSES: You may submit comments by any of the following methods:

- *E-mail: john_reid@blm.gov.*
- *Fax:* 928–718–3761.
- *Mail:* Ruben Sanchez, Field Manager, BLM , Kingman Field Office, 2755 Mission Boulevard, Kingman, Arizona 86401.

Documents pertinent to this proposal may be examined at the Kingman Field Office.

FOR FURTHER INFORMATION: For further information and/or to have your name added to our mailing list, contact John Reid, Environmental Protection Specialist, Kingman Field Office, telephone (928) 718–3735; e-mail *john_reid@blm.gov.*

SUPPLEMENTARY INFORMATION: This document provides notice that the BLM Kingman Field Office, Kingman, Arizona, intends to amend the Kingman RMP with an associated EA and announces the public scoping period.

The proposed location for the Transportation Corridor would be within Gila and Salt River Meridian, Mohave County, Arizona: T. 16N., R.20 W.; T. 17 N., R. 20 W.; T. 17 N., R. 21 W.; T. 19 N., R. 21 W.; and, T. 21 N., R. 20 W. The area described contains about 776 acres in Mohave County, Arizona. The amendment will fulfill the needs and obligations set forth by the National Environmental Policy Act (NEPA), the Federal Land Policy and Management Act (FLPMA), and BLM management policies. The BLM will work collaboratively with interested parties to identify the management decisions that are best suited to local, regional, and national needs and concerns.

The purpose of the public scoping process is to determine relevant issues that will influence the scope of the environmental analysis and alternatives. You may submit comments on issues to the BLM using one of the methods listed in the **ADDRESSES** section above. To be most helpful, please submit formal scoping comments within 30 days after publication of this notice. Comments received after conclusion of the 30-day period will be considered, but may not be addressed in the EA. Before including your address, phone number, e-mail address, or other personal identifying information in your comment, you should be aware that your entire comment—including your personal identifying information—may be made publicly available at any time. While you can ask us in your comment to withhold your personal identifying information from public review, we cannot guarantee that we will be able to do so. The minutes and list of attendees for each scoping meeting will be available to the public and open for 30 days after the meeting to any participant who wishes to clarify the views he or she expressed.

Preliminary issues and management concerns have been identified by BLM personnel, other agencies, and in meetings with individuals and user groups. They represent the BLM's knowledge to date regarding the existing issues and concerns with current land management. The major issues identified thus far that will be addressed include:

- Land Tenure adjustments;
- Cultural Resources management;
- Visual Resource management;
- Special Status Species management;
- Wild and Free Roaming Horse and Burro management; and,
- Resource Access and Travel Management.

In addition to these major issues, a number of management questions and concerns will be addressed in the RMP amendment. The public is encouraged to help identify these questions and concerns during the scoping phase.

The Federal Highway Administration is in the process of developing an EIS that will analyze project specific effects. Following the preparation of the EIS there will be further opportunities for public involvement and comment.

Authority: 43 CFR 2809.

Dated: July 2, 2008.

Ruben A. Sánchez,

Kingman Field Office Manager.

[FR Doc. E8–16082 Filed 7–14–08; 8:45 am]

BILLING CODE 4310–32–P

DEPARTMENT OF THE INTERIOR

National Park Service

General Management Plan, Environmental Impact Statement, Golden Spike National Historic Site, UT

AGENCY: National Park Service, Department of the Interior.

ACTION: Notice of intent to prepare an environmental impact statement for the general management plan for Golden Spike National Historic Site.

SUMMARY: Pursuant to the National Environmental Policy Act of 1969, 42 U.S.C. 4332(2)(C), the National Park Service is preparing an environmental impact statement for the general management plan for Golden Spike National Historic Site, Utah. The Regional Director, Intermountain Region, will approve the environmental impact statement.

Golden Spike National Historic Site is in Box Elder County, Utah. The national historic site was authorized by Congress on July 30, 1965. Congress charged the Secretary with acquisition of lands '' * * * for the purpose of establishing a national historic site commemorating the completion of the first transcontinental railroad across the United States * * *'' The enabling legislation also states that ''the National Park Service * * * shall administer, protect, and develop such historic site, subject to the provisions of the Act entitled 'An Act to establish a National Park Service, and for other purposes' '' approved August 25, 1916 (39 Stat. 525), as amended and supplemented, and the Act entitled ''An Act to provide for the preservation of historic American sites buildings, objects, and antiquities of national significance, and for other purposes,'' approved August 21, 1935 (49 Stat. 666), as amended.

The general management plan will prescribe the resource conditions and visitor experiences that are to be achieved and maintained in the national historic site over the next approximately 20 years. The clarification of what must be achieved according to law and policy will be based on review of the park's purpose, significance, special mandates, and the body of law and policies directing the park management. Management decisions to be made where law, policy, or regulations do not provide clear guidance or limits will be based on the purposes of the park; the range of public expectations and concerns; resource analysis; an evaluation of the natural, cultural, and social impacts of alternative courses of action; and consideration of long-term

economic costs. Based on determinations of desired conditions, the general management plan will outline the kinds of resource management activities, visitor activities, land acquisition, and development that would be appropriate in the park in the future. Alternatives will be developed through this planning process and will include, at a minimum, no-action and the preferred alternative. Major issues may include, but are not limited to, the need to identify desired conditions and future management strategies for cultural and natural resources, the need to address visitor use and experience issues, and site operations concerns.

DATES: The National Park Service will conduct public scoping for 90 days from the date of publication of this notice. Open meetings regarding the general management plan may be held during the public scoping period depending on the level of public interest. Specific dates, times, and locations will be made available in the local media, or by contacting the Superintendent, Golden Spike National Historic Site.

ADDRESSES: Throughout the scoping and planning process, information will be available for public review and comment online at *http://parkplanning.nps.gov/gosp,* and from the office of the Superintendent, Golden Spike National Historic Site, Promontory Summit, Utah.

FOR FURTHER INFORMATION CONTACT: Leslie Crossland, Superintendent, Golden Spike National Historic Site, P.O. Box 897, Brigham City, Utah 84302–0897; TEL (435) 471–2209; FAX (435) 471–2341.

SUPPLEMENTARY INFORMATION: If you want to comment on the general management planning process for Golden Spike National Historic Site, or on any issues associated with the plan, you many submit your comments by any one of several methods. You may mail comments to Superintendent, Golden Spike National Historic Site, P.O. Box 897, Brigham City, Utah 84302–0897. You may also submit comments on the National Park Service's Planning, Environment, and Public Comment Web site at *http://parkplanning.nps.gov/gosp.* Finally, you may hand-deliver comments to Golden Spike Headquarters near Promontory, Utah. Before including your address, phone number, e-mail address, or other personal identifying information in your comment, you should be aware that your entire comment—including your personal identifying information—may be made publicly available at any time. Although you can ask us in your comment to withhold your personal identifying information from public review, we cannot guarantee that we will be able to do so. We will make all submissions from organizations, businesses, or individuals identifying themselves as representatives or officials of organizations or businesses available for public inspection in their entirety.

Dated: May 22, 2008.

John T. Crowley,

Acting Regional Director, Intermountain Region, National Park Service.

[FR Doc. E8–16083 Filed 7–14–08; 8:45 am]

BILLING CODE 4312–DE–P

INTERNATIONAL TRADE COMMISSION

[Investigation No. 337–TA–627]

In the Matter of Certain Short Wavelength Semiconductor Lasers and Products Containing Same; Notice of Commission Decision Not To Review an Initial Determination Extending the Target Date of the Investigation

AGENCY: U.S. International Trade Commission.

ACTION: Notice.

SUMMARY: Notice is hereby given that the U.S. International Trade Commission has determined not to review an initial determination (''ID'') (Order No. 9) issued by the presiding administrative law judge (''ALJ'') extending the target date in the above-captioned investigation to September 14, 2009.

FOR FURTHER INFORMATION CONTACT: Paul M. Bartkowski, Office of the General Counsel, U.S. International Trade Commission, 500 E Street, SW., Washington, DC 20436, telephone (202) 708–5432. Copies of non-confidential documents filed in connection with this investigation are or will be available for inspection during official business hours (8:45 a.m. to 5:15 p.m.) in the Office of the Secretary, U.S. International Trade Commission, 500 E Street, SW., Washington, DC 20436, telephone (202) 205–2000. General information concerning the Commission may also be obtained by accessing its Internet server at *http://www.usitc.gov.* The public record for this investigation may be viewed on the Commission's electronic docket (EDIS) at *http://edis.usitc.gov.* Hearing-impaired persons are advised that information on this matter can be obtained by contacting the Commission's TDD terminal on (202) 205–1810.

SUPPLEMENTARY INFORMATION: This investigation was instituted on January 3, 2008, based on a complaint filed by Seoul Semiconductor Company, Ltd. (''SSC'') of Seoul, Korea. The complaint, as supplemented, alleged violations of section 337 of the Tariff Act of 1930 (19 U.S.C. 1337) in the importation into the United States, the sale for importation, and the sale within the United States after importation of short wavelength semiconductor lasers and products containing the same that infringe claim 1 of U.S. Patent No. 5,321,713. The complaint initially named Nichia Corporation (''Nichia'') of Tokushima, Japan as the sole respondent. Subsequently, five additional respondents were added to the investigation.

On May 27, 2008, the administrative law judge (''ALJ'') issued Order No. 8, requesting that the parties submit a proposed target date and proposed schedules in response to Order No. 6, which added the five additional respondents mentioned above. Upon receipt and consideration of the submissions received, the ALJ issued the subject ID on June 13, 2008, extending the target date from August 24, 2009, to September 14, 2009. No petitions for review were filed. The Commission has determined not to review the ID.

The authority for the Commission's determination is contained in section 337 of the Tariff Act of 1930, as amended (19 U.S.C. 1337), and in sections 210.42 and 210.51 of the Commission's Rules of Practice and Procedure (19 CFR 210.42, 210.51).

By order of the Commission:

Issued: July 9, 2008.

Marilyn R. Abbott,

Secretary to the Commission.

[FR Doc. E8–16023 Filed 7–14–08; 8:45 am]

BILLING CODE 7020–02–P

INTERNATIONAL TRADE COMMISSION

[USITC SE–08–018]

Government in the Sunshine Act Meeting Notice

AGENCY HOLDING THE MEETING: United States International Trade Commission.

TIME AND DATE: July 16, 2008 at 11 a.m.

PLACE: Room 101, 500 E Street, SW., Washington, DC 20436, Telephone: (202) 205–2000.

STATUS: Open to the public.

MATTERS TO BE CONSIDERED:

1. Agenda for future meetings: None.
2. Minutes.

3. Ratification List.

4. Inv. No. 731–TA–990 (Review) (Non-Malleable Cast Iron Pipe Fittings from China)—briefing and vote. (The Commission is currently scheduled to transmit its determination and Commissioners' opinions to the Secretary of Commerce on or before July 24, 2008.)

5. Outstanding action jackets: None.

In accordance with Commission policy, subject matter listed above, not disposed of at the scheduled meeting, may be carried over to the agenda of the following meeting.

By order of the Commission:

Issued: July 9, 2008.

William R. Bishop,

Hearings and Meetings Coordinator.

[FR Doc. E8–16033 Filed 7–14–08; 8:45 am]

BILLING CODE 7020–02–P

INTERNATIONAL TRADE COMMISSION

[USITC SE–08–019]

Government In the Sunshine Act Meeting Notice

AGENCY HOLDING THE MEETING: United States International Trade Commission.

TIME AND DATE: July 17, 2008 at 11 a.m.

PLACE: Room 101, 500 E Street, SW., Washington, DC 20436, Telephone: (202) 205–2000.

STATUS: Open to the public.

MATTERS TO BE CONSIDERED:

1. Agenda for future meetings: none

2. Minutes

3. Ratification List

4. Inv. Nos. 701–TA–449 and 731–TA–1118–1120 (Final) (Light-Walled Rectangular Pipe and Tube from China, Korea, and Mexico)—briefing and vote. (The Commission is currently scheduled to transmit its determinations and Commissioners' opinions to the Secretary of Commerce on or before July 28, 2008.)

5. Outstanding action jackets: None.

In accordance with Commission policy, subject matter listed above, not disposed of at the scheduled meeting, may be carried over to the agenda of the following meeting.

By order of the Commission:

Issued: July 9, 2008.

William R. Bishop,

Hearings and Meetings Coordinator.

[FR Doc. E8–16034 Filed 7–14–08; 8:45 am]

BILLING CODE 7020–02–P

INTERNATIONAL TRADE COMMISSION

[USITC SE–08–020]

Government In the Sunshine Act Meeting Notice

AGENCY HOLDING THE MEETING: United States International Trade Commission.

TIME AND DATE: July 18, 2008 at 11 a.m.

PLACE: Room 101, 500 E Street, SW., Washington, DC 20436, Telephone: (202) 205–2000.

STATUS: Open to the public.

MATTERS TO BE CONSIDERED:

1. Agenda for future meetings: None.

2. Minutes

3. Ratification List

4. Inv. Nos. 701–TA–450 and 731–TA–1122 (Final) (Laminated Woven Sacks from China)—briefing and vote. (The Commission is currently scheduled to transmit its determinations and Commissioners' opinions to the Secretary of Commerce on or before July 30, 2008.)

5. Outstanding action jackets: None.

In accordance with Commission policy, subject matter listed above, not disposed of at the scheduled meeting, may be carried over to the agenda of the following meeting.

By order of the Commission:

Issued: July 9, 2008.

William R. Bishop,

Hearings and Meetings Coordinator.

[FR Doc. E8–16035 Filed 7–14–08; 8:45 am]

BILLING CODE 7020–02–P

DEPARTMENT OF JUSTICE

Notice of Lodging of Consent Decree Under the Clean Air Act

Notice is hereby given that on July 8, 2008, a proposed Consent Decree in *United States* v. *Bristol-Myers Squibb Company,* Civil Action No. 3:08–CV–097, was lodged with the United States District Court for the Southern District of Indiana.

In this action, the United States sought injunctive relief and civil penalties for violations of the industrial refrigerant repair, recordkeeping, and reporting regulations at 40 CFR 82.152–82.166 (Recycling and Emission Reduction) promulgated by the Environmental Protection Agency (''EPA'') under Subchapter VI of the Act (Stratospheric Ozone Protection), 42 U.S.C. 7671–7671q, at thirteen of Bristol-Myers Squibb's United States facilities, which are located in Wallingford, Connecticut; Evansville and Mount Vernon, Indiana; Billerica, Massachusetts; Zeeland, Michigan; Hopewell, Lawrenceville, and New Brunswick, New Jersey; Buffalo and East Syracuse, New York; and Barceloneta, Humacao, and Mayaguez, Puerto Rico. In the proposed Consent Decree, Bristol-Myers Squibb agrees to (1) retrofit or retire seventeen of its industrial process and comfort cooling (air conditioners) refrigeration units at five of its facilities, in Evansville and Mt. Vernon, Indiana; Hopewell, New Jersey; and Humacao and Mayaguez, Puerto Rico by July 1, 2009, (2) pay a $127,000 penalty to the United States, and (3) perform a Supplemental Environmental Project by retiring two comfort cooling refrigeration units at its New Brunswick, New Jersey facility and tying the functions served by the comfort coolers into the company's new centralized water-chilled refrigeration systems at a cost of at least $2,250,000.

The Department of Justice will receive for a period of thirty (30) days from the date of this publication comments relating to the Consent Decree. Comments should be addressed to the Assistant Attorney General, Environment and Natural Resources Division, and either e-mailed to *pubcomment-ees.enrd@usdoj.gov* or mailed to P.O. Box 7611, U.S. Department of Justice, Washington, DC 20044–7611, and should refer to *United States* v. *Bristol-Myers Squibb Company,* D.J. Ref. 90–5–2–1–08547.

The Consent Decree may be examined at the Office of the United States Attorney, 10 West Market St., Suite 2100, Indianapolis, IN, 46204, and at U.S. EPA Region 5, 77 West Jackson Blvd., Chicago, IL 60604. During the public comment period, the Consent Decree may also be examined on the following Department of Justice Web site, to *http://www.usdoj.gov/enrd/Consent_Decrees.html.* A copy of the Consent Decree may also be obtained by mail from the Consent Decree Library, P.O. Box 7611, U.S. Department of Justice, Washington, DC 20044–7611 or by faxing or e-mailing a request to Tonia Fleetwood (*tonia.fleetwood@usdoj.gov*), fax no. (202) 514–0097, phone confirmation number (202) 514–1547. In requesting a copy from the Consent Decree Library, please enclose a check in the amount of $9.00 (25 cents per page reproduction cost) payable to the U.S. Treasury or, if by e-mail or fax, forward a check in that amount to the

Consent Decree Library at the stated address.

William D. Brighton,

Assistant Chief, Environmental Enforcement Section, Environment and Natural Resources Division.

[FR Doc. E8–16107 Filed 7–14–08; 8:45 am]

BILLING CODE 4410–15–P

DEPARTMENT OF JUSTICE

Supplemental Notice of Lodging of Consent Decree Pursuant to the Comprehensive Environmental Response, Compensation and Liability Act

On June 5, 2008, the Department of Justice published notice of lodging of a proposed Consent Decree on May 29, 2008, with the United States District Court for the Northern District of Illinois in *United States* v. *Waste Management of Illinois, Inc. et al.*, Civil No. 08–50094 (N.D. Ill.), under the Comprehensive Environmental Response, Compensation, and Liability Act (''CERCLA''), 42 U.S.C. 9601–9675. *See* 73 FR 32050–1 (June 5, 2008).

The Department of Justice hereby supplements its Notice to indicate that under Section 7003(d) of the Resource Conservation and Recovery Act (''RCRA''), 42 U.S.C. 6973(d), the public may request an opportunity for a public meeting in the affected area at which time they may offer comment. This opportunity to request a public meeting is extended for 10 days from the date of publication of this Supplemental Notice.

William D. Brighton,

Assistant Chief, Environmental Enforcement Section, Environment and Natural Resources Division.

[FR Doc. E8–16110 Filed 7–14–08; 8:45 am]

BILLING CODE 4410–15–P

DEPARTMENT OF LABOR

Employment and Training Administration

[TA–W–61,393]

Best: Artex LLC, Currently Known as Best Textiles International Ltd., Highland, IL; Amended Certification Regarding Eligibility to Apply for Worker Adjustment Assistance and Alternative Trade Adjustment Assistance

In accordance with Section 223 of the Trade Act of 1974 (19 U.S.C. 2273), and Section 246 of the Trade Act of 1974 (26 U.S.C. 2813), as amended, the Department of Labor issued a Certification Regarding Eligibility to Apply for Worker Adjustment Assistance and Alternative Trade Adjustment Assistance on May 24, 2007, applicable to workers of Best: Artex LLC, Highland, Illinois. The notice was published in the **Federal Register** on June 7, 2007 (72 FR 31616).

At the request of the State agency, the Department reviewed the certification for workers of the subject firm. The workers are engaged in the support activities of accounting and technical services to an affiliate in West Point, Mississippi, producing dyed and bleached fabric.

New information shows that following a change in ownership in February 2007, Best: Artex LLC is currently known as Best Textiles International Ltd. Workers separated from employment at the subject firm had their wages reported under a separate unemployment insurance (UI) tax account for Best Textiles International Ltd.

Accordingly, the Department is amending this certification to show that Best: Artex LLC is currently known as Best Textiles International Ltd.

The intent of the Department's certification is to include all workers of Best: Artex LLC, currently known as Best Textiles International Ltd. who were adversely affected by a shift in production to Cambodia.

The amended notice applicable to TA–W–61,393 is hereby issued as follows:

''All workers of Best: Artex LLC, currently known as Best Textiles International Ltd., Highland, Illinois, who became totally or partially separated from employment on or after April 26, 2006, through May 24, 2009, are eligible to apply for adjustment assistance under Section 223 of the Trade Act of 1974, and are also eligible to apply for alternative trade adjustment assistance under Section 246 of the Trade Act of 1974.''

Signed at Washington, DC this 9th day of July 2008.

Linda G. Poole,

Certifying Officer, Division of Trade Adjustment Assistance.

[FR Doc. E8–16074 Filed 7–14–08; 8:45 am]

BILLING CODE 4510–FN–P

DEPARTMENT OF LABOR

Employment and Training Administration

[TA–W–62,520]

Carrier Access Corporation, Currently Known as Turin Networks, Boulder, CO; Amended Certification Regarding Eligibility To Apply for Worker Adjustment Assistance and Alternative Trade Adjustment Assistance

In accordance with Section 223 of the Trade Act of 1974 (19 U.S.C. 2273), and Section 246 of the Trade Act of 1974 (26 U.S.C. 2813), as amended, the Department of Labor issued a Certification Regarding Eligibility to Apply for Worker Adjustment Assistance and Alternative Trade Adjustment Assistance on January 29, 2008, applicable to workers of Carrier Access Corporation, Boulder, Colorado. The notice was published in the **Federal Register** on January 25, 2008 (73 FR 4634).

At the request of a company official, the Department reviewed the certification for workers of the subject firm. The workers are engaged in the production of telecommunication equipment.

New information shows that on February 8, 2008, Turin Networks purchased Carrier Access and is currently known as Turin Networks.

Accordingly, the Department is amending this certification to show that Carrier Access Corporation is currently known as Turin Networks.

The intent of the Department's certification is to include all workers of Carrier Access, currently known as Turin Networks who were adversely affected by a shift in production of telecommunication equipment to Mexico.

The amended notice applicable to TA–W–62,520 is hereby issued as follows:

''All workers of Carrier Access Corporation, currently known as Turin Networks, Boulder, Colorado, who became totally or partially separated from employment on or after January 7, 2008, through January 9, 2010, are eligible to apply for adjustment assistance under Section 223 of the Trade Act of 1974.''

''All workers of Carrier Access Corporation, currently known as Turin Networks, Boulder, Colorado, who became totally or partially separated from employment on or after November 27, 2006, through January 9, 2010, are eligible to apply for alternative trade adjustment assistance under Section 246 of the Trade Act of 1974.''

Signed at Washington, DC, this 8th day of July 2008.

Richard Church,

Certifying Officer, Division of Trade Adjustment Assistance.

[FR Doc. E8–16076 Filed 7–14–08; 8:45 am]

BILLING CODE 4510–FN–P

DEPARTMENT OF LABOR

Employment and Training Administration

[TA–W–62,298]

Delphi Corporation, Thermal—Vandalia Plant, Including On-Site Leased Workers From Bartech, Vandalia, OH; Amended Certification Regarding Eligibility To Apply for Worker Adjustment Assistance and Alternative Trade Adjustment Assistance

In accordance with Section 223 of the Trade Act of 1974 (19 U.S.C. 2273), and Section 246 of the Trade Act of 1974 (26 U.S.C. 2813), as amended, the Department of Labor issued a Certification of Eligibility to Apply for Worker Adjustment Assistance and Alternative Trade Adjustment Assistance on October 24, 2007, applicable to workers of Delphi Corporation, Thermal—Vandalia Plant, Vandalia, Ohio. The notice was published in the **Federal Register** on November 6, 2007 (72 FR 62681).

At the request of the State agency, the Department reviewed the certification for workers of the subject firm. The workers are engaged in the production of door modules, instrument panels, airbags, steering wheels, and power products for the auto industry.

New information shows that leased workers from Bartech were employed on-site at the Vandalia, Ohio location of Delphi Corporation, Thermal—Vandalia Plant. The Department has determined that these workers were sufficiently under the control of the subject firm to be considered leased workers.

Based on these findings, the Department is amending this certification to include leased workers from Bartech working on-site at the Vandalia, Ohio location of the subject firm.

The intent of the Department's certification is to include all workers employed at Delphi Corporation, Thermal—Vandalia Plant who were adversely affected by a shift in production of door modules, instrument panels, airbags, steering wheels, and power products to Mexico.

The amended notice applicable to TA–W–62,298 is hereby issued as follows:

''All workers of Delphi Corporation, Thermal—Vandalia Plant, including on-site leased workers from Bartech, Vandalia, Ohio, who became totally or partially separated from employment on or after October 11, 2006, through October 24, 2009, are eligible to apply for adjustment assistance under Section 223 of the Trade Act of 1974, and are also eligible to apply for alternative trade adjustment assistance under Section 246 of the Trade Act of 1974.''

Signed at Washington, DC this 9th day of July 2008.

Linda G. Poole,

Certifying Officer, Division of Trade Adjustment Assistance.

[FR Doc. E8–16075 Filed 7–14–08; 8:45 am]

BILLING CODE 4510–FN–P

DEPARTMENT OF LABOR

Employment and Training Administration

[TA–W–61,038]

Delphi Corporation, Automotive Holdings Group, Including Workers Whose Wages Are Reported Under the Employer Identification Number for General Motors Corporation, and Including On-Site Leased Workers from Bartech, MSX, Inc., Production Design Services, Troy Design and Setech, Inc., Moraine, OH; Amended Certification Regarding Eligibility To Apply for Worker Adjustment Assistance and Alternative Trade Adjustment Assistance

In accordance with Section 223 of the Trade Act of 1974 (19 U.S.C. 2273), and Section 246 of the Trade Act of 1974 (26 U.S.C. 2813), as amended, the Department of Labor issued a Certification Regarding Eligibility to Apply for Worker Adjustment Assistance and Alternative Trade Adjustment Assistance on March 16, 2007, applicable to workers of Delphi Corporation, Automotive Holdings Group, including on-site leased workers of Bartech, MSX, Inc., Production Design Services and Troy Design, Moraine, Ohio. The notice was published in the **Federal Register** on March 30, 2007 (72 FR 15167). The certification was amended on May 1, 2008 to include on-site leased workers from Setech, Inc. The notice was published in the **Federal Register** on May 13, 2008 (73 FR 27558).

At the request of a State agency, the Department reviewed the certification for workers of the subject firm. The workers were engaged in the production of automotive compressors and pistons. New information provided to the Department shows that in March 2006, following a ''Plan of Reorganization'' agreement between Delphi Corporation and General Motors Corporation, some workers of the subject firm had their wages reported under the Unemployment Insurance (UI) tax account for General Motors Corporation.

Accordingly, the Department is amending this certification to properly reflect this matter.

The amended notice applicable to TA–W–63,038 is hereby issued as follows:

''All workers of Delphi Corporation, Automotive Holdings Group, including workers whose wages are reported under the employer identification number for General Motors Corporation, and including on-site leased workers from Bartech, MSX, Inc., Production Design Services, Troy Design and Setech, Inc., Moraine, Ohio, who became totally or partially separated from employment on or after February 26, 2006, through March 16, 2009, are eligible to apply for adjustment assistance under Section 223 of the Trade Act of 1974, and are also eligible to apply for alternative trade adjustment assistance under Section 246 of the Trade Act of 1974.''

Signed at Washington, DC, this 7th day of July 2008.

Linda G. Poole,

Certifying Officer, Division of Trade Adjustment Assistance.

[FR Doc. E8–16073 Filed 7–14–08; 8:45 am]

BILLING CODE 4510–FN–P

DEPARTMENT OF LABOR

Employment and Training Administration

Notice of Determinations Regarding Eligibility To Apply for Worker Adjustment Assistance and Alternative Trade Adjustment Assistance

In accordance with Section 223 of the Trade Act of 1974, as amended (19 U.S.C. 2273) the Department of Labor herein presents summaries of determinations regarding eligibility to apply for trade adjustment assistance for workers (TA–W) number and alternative trade adjustment assistance (ATAA) by (TA–W) number issued during the period of June 23 through June 27, 2008.

In order for an affirmative determination to be made for workers of a primary firm and a certification issued regarding eligibility to apply for worker adjustment assistance, each of the group eligibility requirements of Section 222(a) of the Act must be met.

I. Section (a)(2)(A) all of the following must be satisfied:

A. A significant number or proportion of the workers in such workers' firm, or an appropriate subdivision of the firm, have become totally or partially

separated, or are threatened to become totally or partially separated;

B. the sales or production, or both, of such firm or subdivision have decreased absolutely; and

C. increased imports of articles like or directly competitive with articles produced by such firm or subdivision have contributed importantly to such workers' separation or threat of separation and to the decline in sales or production of such firm or subdivision; or

II. Section (a)(2)(B) both of the following must be satisfied:

A. A significant number or proportion of the workers in such workers' firm, or an appropriate subdivision of the firm, have become totally or partially separated, or are threatened to become totally or partially separated;

B. there has been a shift in production by such workers' firm or subdivision to a foreign country of articles like or directly competitive with articles which are produced by such firm or subdivision; and

C. One of the following must be satisfied:

1. The country to which the workers' firm has shifted production of the articles is a party to a free trade agreement with the United States;

2. the country to which the workers' firm has shifted production of the articles to a beneficiary country under the Andean Trade Preference Act, African Growth and Opportunity Act, or the Caribbean Basin Economic Recovery Act; or

3. there has been or is likely to be an increase in imports of articles that are like or directly competitive with articles which are or were produced by such firm or subdivision.

Also, in order for an affirmative determination to be made for secondarily affected workers of a firm and a certification issued regarding eligibility to apply for worker adjustment assistance, each of the group eligibility requirements of Section 222(b) of the Act must be met.

(1) Significant number or proportion of the workers in the workers' firm or an appropriate subdivision of the firm have become totally or partially separated, or are threatened to become totally or partially separated;

(2) the workers' firm (or subdivision) is a supplier or downstream producer to a firm (or subdivision) that employed a group of workers who received a certification of eligibility to apply for trade adjustment assistance benefits and such supply or production is related to the article that was the basis for such certification; and

(3) either—

(A) the workers' firm is a supplier and the component parts it supplied for the firm (or subdivision) described in paragraph (2) accounted for at least 20 percent of the production or sales of the workers' firm; or

(B) a loss or business by the workers' firm with the firm (or subdivision) described in paragraph (2) contributed importantly to the workers' separation or threat of separation.

In order for the Division of Trade Adjustment Assistance to issue a certification of eligibility to apply for Alternative Trade Adjustment Assistance (ATAA) for older workers, the group eligibility requirements of Section 246(a)(3)(A)(ii) of the Trade Act must be met.

1. Whether a significant number of workers in the workers' firm are 50 years of age or older.

2. Whether the workers in the workers' firm possess skills that are not easily transferable.

3. The competitive conditions within the workers' industry (i.e., conditions within the industry are adverse).

Affirmative Determinations for Worker Adjustment Assistance

The following certifications have been issued. The date following the company name and location of each determination references the impact date for all workers of such determination.

The following certifications have been issued. The requirements of Section 222(a)(2)(A) (increased imports) of the Trade Act have been met.

None.

The following certifications have been issued. The requirements of Section 222(a)(2)(B) (shift in production) of the Trade Act have been met.

TA–W–63,579; Alcatel-Lucent, Direct Fulfillment Team, Oklahoma City, OK: June 13, 2007.

The following certifications have been issued. The requirements of Section 222(b) (supplier to a firm whose workers are certified eligible to apply for TAA) of the Trade Act have been met.

None.

The following certifications have been issued. The requirements of Section 222(b) (downstream producer for a firm whose workers are certified eligible to apply for TAA based on increased imports from or a shift in production to Mexico or Canada) of the Trade Act have been met.

None.

Affirmative Determinations for Worker Adjustment Assistance and Alternative Trade Adjustment Assistance

The following certifications have been issued. The date following the company name and location of each determination references the impact date for all workers of such determination.

The following certifications have been issued. The requirements of Section 222(a)(2)(A) (increased imports) and Section 246(a)(3)(A)(ii) of the Trade Act have been met.

TA–W–63,385; Cadence Innovation, LLC, Headquarters Div., Michigan Staffing, Modern Eng., National Technical, Troy, MI: May 12, 2007.

TA–W–63,472; Sandberg and Sikorski Corp., New York, NY: May 29, 2007.

TA–W–63,488; Schweitzer-Mauduit International, Inc., Lee Mills Division, Lee, MA: August 5, 2008.

TA–W–62,882; Glaxosmithkline, Bristol, TN: April 9, 2007.

TA–W–63,303; Hermetic Seal Corp, Division of Ametek HCC Industries, El Monte, CA: April 15, 2007.

TA–W–63,303A; Hermetic Seal Corp, Division of Ametek HCC Industries, Rosemead, CA: April 15, 2007.

TA–W–63,308; Sumitomo Bakelite North America, Inc., Manchester, CT: May 2, 2007.

TA–W–63,343; Taylor King, Inc., Taylorsville, NC: May 7, 2007.

TA–W–63,419; Ansonia Copper and Brass, Inc., Ansonia Division, Ansonia, CT: December 7, 2007.

TA–W–62,801; Taylormade-Adidas Golf Co, Industrial Plastics, Adecco, Westminister, SC: March 2, 2007.

TA–W–63,550; Pazvenu Apparel, Inc., New York, NY: June 1, 2007.

TA–W–63,570; Blue Angel's Fashion, Inc., San Francisco, CA: June 20, 2007.

The following certifications have been issued. The requirements of Section 222(a)(2)(B) (shift in production) and Section 246(a)(3)(A)(ii) of the Trade Act have been met.

TA–W–63,325; Schott North America, Inc., Auburn, NY: May 2, 2007.

TA–W–63,335; Bauman Springs USA, Inc., Paradigm Personnel, Labor Ready, Pineville, NC: April 18, 2007.

TA–W–63,354; JBL Incorporated, Division of Harman International, Inc., Northridge, CA: April 9, 2007.

TA–W–63,387; Todco, Div. of Overhead Door Corp., Placement Pros, Fresno, CA: May 14, 2007.

TA–W–63,394; Serigraph, Inc., Seek, Adecco, OPS and Site, West Bend, WI: May 13, 2007.

TA–W–63,400; Gateway, Inc., North Sioux City, SD: May 14, 2007.

TA–W–63,400A; Gateway, Inc., Irvine Center Drive Facility, Irvine, CA: May 14, 2007.

TA–W–63,400B; Gateway, Inc., Myford Road Facility, Irvine, CA: May 14, 2007.

TA–W–63,429; BorgWarner, Transmission Systems Division, Aerotek, Frankfort, IL: October 7, 2007.

TA–W–63,475; Biosense Webster, A Div. of Johnson & Johnson, Kelly Services, Irwindale, CA: June 3, 2007.

TA–W–63,476; Indalex, Inc., Modesto, CA: June 4, 2007.

TA–W–63,484; Paul Winston Eurostar, LLC, New York, NY: May 23, 2007.

TA–W–63,490; Tenneco, Inc., Clevite-Pullman Division, Milan, OH: June 4, 2007.

TA–W–63,504; Kongsberg Automotive, Inc., Interior Systems Division, Willis, TX: June 5, 2007.

TA–W–63,510; Plastech Engineered Products, Manpower, Kenton, TN: June 6, 2007.

TA–W–63,514; Plastech Engineered Products, Inc., Elwood, IN: June 5, 2007.

TA–W–63,522; Brockway Mould, Inc., Brockport, PA: June 20, 2008.

TA–W–63,558; Park Shirt Company, Inc., Jamestown, TN: June 17, 2007.

TA–W–63,059; Springs Global, Griffin Finishing Division, Servsource, Griffin, GA: March 24, 2007.

TA–W–63,528; Callaway Golf Ball Operations, Inc., Callaway Golf, BTS Staffing, Accustaff, Johnstown, NY: June 6, 2007.

TA–W–63,544; ITW Alma, Illinois Tool Works, Global Employment, Auto Personnel, Kennesaw, GA: June 16, 2007.

TA–W–63,551; Culp, Inc., Culp Weaving Division, Graham, NC: April 5, 2008.

The following certifications have been issued. The requirements of Section 222(b) (supplier to a firm whose workers are certified eligible to apply for TAA) and Section 246(a)(3)(A)(ii) of the Trade Act have been met.

None.

The following certifications have been issued. The requirements of Section 222(b) (downstream producer for a firm whose workers are certified eligible to apply for TAA based on increased imports from or a shift in production to Mexico or Canada) and Section 246(a)(3)(A)(ii) of the Trade Act have been met.

TA–W–63,473; Whyco Finishing Technologies, LLC, Thomaston, CT: June 3, 2007.

Negative Determinations for Alternative Trade Adjustment Assistance

In the following cases, it has been determined that the requirements of 246(a)(3)(A)(ii) have not been met for the reasons specified.

The Department has determined that criterion (1) of Section 246 has not been met. The firm does not have a significant number of workers 50 years of age or older.

TA–W–63,579; Alcatel-Lucent, Direct Fulfillment Team, Oklahoma City, OK.

The Department has determined that criterion (2) of Section 246 has not been met. Workers at the firm possess skills that are easily transferable.

None.

The Department has determined that criterion (3) of Section 246 has not been met. Competition conditions within the workers' industry are not adverse.

None.

Negative Determinations for Worker Adjustment Assistance and Alternative Trade Adjustment Assistance

In the following cases, the investigation revealed that the eligibility criteria for worker adjustment assistance have not been met for the reasons specified.

Because the workers of the firm are not eligible to apply for TAA, the workers cannot be certified eligible for ATAA.

The investigation revealed that criteria (a)(2)(A)(I.A.) and (a)(2)(B)(II.A.) (employment decline) have not been met.

TA–W–63,364; Domtar A.W. Corporation, U.S. Pulp and Paper Division, Nekoosa, WI.

TA–W–63,440; Magline, Inc., Pinconning, MI.

TA–W–63,559; Shieldalloy Metallurgical Corporation, Newfield, NJ.

The investigation revealed that criteria (a)(2)(A)(I.B.) (Sales or production, or both, did not decline) and (a)(2)(B)(II.B.) (shift in production to a foreign country) have not been met.

TA–W–63,406; Cocomo Apparel, Inc, Vernon, CA.

TA–W–63,409; Twigg Corporation, Martinsville, IN.

TA–W–63,471; Appleton Coated LLC, Combined Locks, WI.

The investigation revealed that criteria (a)(2)(A)(I.C.) (increased imports) and (a)(2)(B)(II.B.) (shift in production to a foreign country) have not been met.

TA–W–62,612; Buckhorn, Inc., Dawson Springs, KY.

TA–W–62,720; PGM-Fermentation West Plant, Division of Pfizer Global Manufacturing, Portage, MI.

TA–W–62,901; Georgia Pacific Corrugated LLC, Packaging Division, Franklin, MA.

TA–W–63,012; Building Materials Corporation of America, DBA GAF Materials Corporation, Millis, MA.

TA–W–63,024; West Pharmaceutical Services, Tech Group Erie Tool Shop, Erie, PA.

TA–W–63,264; Kenworth Truck Company, Chillicothe, OH.

TA–W–63,397; Skyline Corporation, Bossier City, LA.

TA–W–63,447; West Fraser, Inc., Leola Lumber Mill, Leola, AR.

TA–W–63,329; Maple Leaf Farms, Inc., Franksville, WI.

The workers' firm does not produce an article as required for certification under Section 222 of the Trade Act of 1974.

TA–W–63,375; Boston Coach Corporation, Everett Call Center, Everett, MA.

TA–W–63,524; Tennessee Orthopaedic Alliance, Nashville, TN.

TA–W–63,580; Credit Payment Services, Inc., Reno, NV.

The investigation revealed that criteria of Section 222(b)(2) has not been met. The workers' firm (or subdivision) is not a supplier to or a downstream producer for a firm whose workers were certified eligible to apply for TAA.

None.

I hereby certify that the aforementioned determinations were issued during the period of June 23 through June 27, 2008. Copies of these determinations are available for inspection in Room C–5311, U.S. Department of Labor, 200 Constitution Avenue, NW., Washington, DC 20210 during normal business hours or will be mailed to persons who write to the above address.

Dated: July 7, 2008.

Linda G. Poole,

Certifying Officer, Division of Trade Adjustment Assistance.

[FR Doc. E8–16072 Filed 7–14–08; 8:45 am]

BILLING CODE 4510–FN–P

DEPARTMENT OF LABOR

Employment and Training Administration

[TA–W–62,947]

Norcal Pottery Products, Macramé Department, Richmond Distribution Center, Richmond, CA; Notice of Negative Determination on Reconsideration

On April 30, 2008, the Department issued an Affirmative Determination Regarding Application for Reconsideration for the workers and former workers of the subject firm. The notice was published in the **Federal Register** on May 7, 2008 (73 FR 25772).

The TAA petition, which was filed on behalf of workers at Norcal Pottery Products, Macramé Department, Richmond Distribution Center, Richmond, California engaged in the production of macramé plant hangers was denied based on the findings that during the relevant time period, the subject company did not separate or threaten to separate a significant number or proportion of workers, as required by Section 222 of the Trade Act of 1974.

In the request for reconsideration, the petitioner stated that the subject firm contracted five independent contractors to produce macramé plant hangers. The petitioner also stated that the contracts between the subject firm and the contractors were terminated in 2007. The petitioner seems to allege that because the workers were contracted to perform production for the subject firm, they should be considered as employees of the subject firm and, therefore, eligible for Trade Adjustment Assistance. To support the allegations, the petitioner attached copies of the ''Independent Contractor Agreement''.

To determine whether five contracting workers were employees of the subject firm, on-site leased workers, or workers under the control of the subject firm and whether there was a significant proportion of workers separated or threatened with separations at the subject company during the relevant time period, the Department contacted the subject firm's company official and requested employment figures for the relevant employment data (for one year prior to the date of the petition and any imminent layoffs).

The company official stated that five independent contractors were not employees of Norcal Pottery Products, Macramé Department, Richmond Distribution Center, Richmond, California, and they were not leased workers employed on-site of the subject facility. It was revealed that the independent contractors produced macramé plant hangers at their homes. The company official also stated that the nature of the business between the subject firm and the independent contractors was determined by the contractual agreement, which underlines no operational control by Norcal Pottery Products over these independent contractors.

The Department carefully reviewed the Independent Contract Agreement provided by the petitioner to determine whether there was operational control by the subject firm over the contracted workers. According to the document, the relationship between the parties is described as two independent entities ''engaged in a separate business enterprise''. It states that the ''contractor is free to contract similar services to be provided for other customers''. The Agreement also states that ''Company is concerned only with the act of completion of the work,'' and that ''the conduct and control of the work to be provided by Contractor will lie solely with the Contractor, who alone shall be in control'' of the work. Furthermore, the agreement allows the contractor to employ or utilize other persons to carry out the terms of the Agreement under contractor's control.

The investigation on reconsideration determined that five contractors claiming to be employees of Norcal Pottery Products, Macramé Department, Richmond Distribution Center, Richmond, California were not employees of the subject firm or leased workers employed on-site of the subject facility. The investigation also revealed that the independent contractors were not under operational control of the subject facility, and thus cannot be considered to be a part of the worker group employed by the subject firm.

After careful review of the information provided on reconsideration, it was revealed that Norcal Pottery Products, Macramé Department, Richmond Distribution Center, Richmond, California is a distribution facility and no production of macramé plant hangers took place at the subject location. Moreover, a review of the records provided by the company official established that only two workers were separated from the subject facility during the relevant time period.

Conclusion

After reconsideration, I affirm the original notice of negative determination of eligibility to apply for worker adjustment assistance for workers and former workers of Norcal Pottery Products, Macramé Department, Richmond Distribution Center, Richmond, California.

Signed at Washington, DC, this 1st day of July, 2008.

Elliott S. Kushner,

Certifying Officer, Division of Trade Adjustment Assistance.

[FR Doc. E8–16078 Filed 7–14–08; 8:45 am]

BILLING CODE 4510–FN–P

DEPARTMENT OF LABOR

Employment and Training Administration

[TA–W–63,418]

Gramercy Jewelry Manufacturing Corporation, New York, NY; Notice of Negative Determination Regarding Application for Reconsideration

By application dated June 19, 2008, a company official requested administrative reconsideration of the Department's negative determination regarding eligibility for workers and former workers of Gramercy Jewelry Manufacturing Corporation, New York, New York, to apply for Trade Adjustment Assistance (TAA) and Alternative Trade Adjustment Assistance (ATAA). The negative determination was issued on June 10, 2008. The Department's notice of determination was published in the **Federal Register** on June 27, 2008 (73 FR 36576).

Pursuant to 29 CFR 90.18(c) reconsideration may be granted under the following circumstances:

(1) If it appears on the basis of facts not previously considered that the determination complained of was erroneous;

(2) If it appears that the determination complained of was based on a mistake in the determination of facts not previously considered; or

(3) If in the opinion of the Certifying Officer, a misinterpretation of facts or of the law justified reconsideration of the decision.

The TAA petition, which was filed on behalf of workers at Gramercy Jewelry Manufacturing Corporation, New York, New York engaged in the production of jewelry, was denied based on the findings that sales and production at the subject firm did not decrease from 2006 to 2007 or from January through April 2008, when compared with the same period in 2007. The investigation also revealed no shift in production to a foreign country in the relevant time period.

In the request for reconsideration, the company official stated that he disagrees with the investigation and that the

subject firm ''laid off about 25 employees.'' The company official did not supply any additional information regarding sales or production that would warrant reopening the investigation.

After careful review of the request for reconsideration, the Department determines that none of the circumstances under 29 CFR 90.18(c) for granting reconsideration have been met.

Conclusion

After review of the application and investigative findings, I conclude that there has been no error or misinterpretation of the law or of the facts which would justify reconsideration of the Department of Labor's prior decision. Accordingly, the application is denied.

Signed at Washington, DC this 8th day of July 2008.

Linda G. Poole,

Certifying Officer, Division of Trade Adjustment Assistance.

[FR Doc. E8–16079 Filed 7–14–08; 8:45 am]

BILLING CODE 4510–FN–P

DEPARTMENT OF LABOR

Employment and Training Administration

Request for Certification of Compliance—Rural Industrialization Loan and Grant Program

AGENCY: Employment and Training Administration, Labor.

ACTION: Notice.

SUMMARY: The Employment and Training Administration is issuing this notice to announce the receipt of two (2) individual ''Certification of Non-Relocation and Market and Capacity Information Reports'' (Form 4279–2) for the following:

Applicant/Location: Central Pork Packers, LLC/Cherokee, Iowa and Rock Rapids, Iowa.

Principal Product/Purpose: The loan, guarantee, or grant applications are for two (2) new business ventures that plan to separately acquire for each location the infrastructure, building, and equipment needed for pork animal slaughtering. The NAICS industry code for both enterprises is: 311611 Animal (except Poultry) Slaughtering.

DATES: All interested parties may submit comments in writing no later than July 29, 2008. Copies of adverse comments received will be forwarded to the applicant noted above.

ADDRESSES: Address all comments concerning this notice to Anthony D. Dais, U.S. Department of Labor, Employment and Training Administration, 200 Constitution Avenue, NW., Room S–4231, Washington, DC 20210; or e-mail *Dais.Anthony@dol.gov;* or transmit via fax (202) 693–3015 (this is not a toll-free number).

FOR FURTHER INFORMATION CONTACT: Anthony D. Dais, at telephone number (202) 693–2784 (this is not a toll-free number).

SUPPLEMENTARY INFORMATION: Section 188 of the Consolidated Farm and Rural Development Act of 1972, as established under 29 CFR Part 75, authorizes the United States Department of Agriculture to make or guarantee loans or grants to finance industrial and business activities in rural areas. The Secretary of Labor must review the application for financial assistance for the purpose of certifying to the Secretary of Agriculture that the assistance is not calculated, or likely, to result in: (a) A transfer of any employment or business activity from one area to another by the loan applicant's business operation; or, (b) An increase in the production of goods, materials, services, or facilities in an area where there is not sufficient demand to employ the efficient capacity of existing competitive enterprises unless the financial assistance will not have an adverse impact on existing competitive enterprises in the area. The Employment and Training Administration within the Department of Labor is responsible for the review and certification process. Comments should address the two bases for certification and, if possible, provide data to assist in the analysis of these issues.

Signed: at Washington, DC this 9th of July, 2008.

Gay M. Gilbert,

Administrator, Office of Workforce Investment, Employment and Training Administration.

[FR Doc. E8–16145 Filed 7–14–08; 8:45 am]

BILLING CODE 4510–FN–P

DEPARTMENT OF LABOR

Employment and Training Administration

[TA–W–62,875]

Bolton Metal Products Co., Including On-Site Leased Workers of Adecco Staffing, Bellefonte, PA; Amended Notice of Revised Determination on Reconsideration

In accordance with Section 223 of the Trade Act of 1974 (19 U.S.C. 2273), and Section 246 of the Trade Act of 1974 (26 U.S.C. 2813), as amended, the Department of Labor issued a Notice of Revised Determination on Reconsideration on May 9, 2008. The notice was published in the **Federal Register** on May 15, 2008 (72 FR 28169–28170).

At the request of the petitioners, the Department reviewed the Notice of Revised Determination on Reconsideration for workers of the subject firm. The workers are engaged in the production of brass rod, wire and low melt alloys. The workers are separately identifiable by product line.

New information shows that leased workers of Adecco Staffing were employed on-site at the Bellefonte, Pennsylvania location of Bolton Metal Products, Co. The Department has determined that these workers were sufficiently under the control of Bolton Metal Products Co. to be considered leased workers.

Based on these findings, the Department is amending this certification to include leased workers of Adecco Staffing working on-site at the Bellefonte, Pennsylvania location of the subject firm.

The intent of the Department's certification is to include all workers employed at Bolton Metal Products Co., Bellefonte, Pennsylvania who were adversely-impacted by increased imports of brass rod, wire, and low melt alloys.

The amended notice applicable to TA–W–62,875 is hereby issued as follows:

''All workers of Bolton Metal Products Co., including on-site leased workers of Adecco Staffing, Bellefonte, Pennsylvania, who became totally or partially separated from employment on or after February 18, 2007, through May 9, 2010, are eligible to apply for adjustment assistance under Section 223 of the Trade Act of 1974, and are also eligible to apply for alternative trade adjustment assistance under Section 246 of the Trade Act of 1974.''

Signed at Washington, DC this 26th day of June 2008.

Elliott S. Kushner,

Certifying Officer, Division of Trade Adjustment Assistance.

[FR Doc. E8–16077 Filed 7–14–08; 8:45 am]

BILLING CODE 4510–FN–P

DEPARTMENT OF LABOR

Employment and Training Administration

[TA–W–63,458]

Excello Engineered Systems, Macedonia, OH; Notice of Termination of Investigation

Pursuant to Section 221 of the Trade Act of 1974, as amended, an investigation was initiated on June 2, 2008 in response to a worker petition filed by a company official on behalf of workers of Excello Engineered Systems, Macedonia, Ohio.

The petitioner has requested that the petition be withdrawn. Consequently, the investigation has been terminated.

Signed at Washington, DC, this 8th day of July 2008.

Richard Church,

Certifying Officer, Division of Trade Adjustment Assistance.

[FR Doc. E8–16080 Filed 7–14–08; 8:45 am]

BILLING CODE 4510–FN–P

DEPARTMENT OF LABOR

Employment and Training Administration

[TA–W–63,616]

Holophane, Newark, OH; Notice of Termination of Investigation

Pursuant to Section 221 of the Trade Act of 1974, as amended, an investigation was initiated on June 30, 2008 in response to a petition filed by a company official on behalf of workers of Holophane, Newark, Ohio.

The petitioning group of workers are covered under the earlier petition (TA–W–63,615), filed on June 27, 2008 that is the subject of an ongoing investigation for which a determination has not yet been issued. Further investigation in this case would duplicate efforts and serve no purpose; therefore the investigation under this petition has been terminated.

Signed at Washington, DC this 8th day of July, 2008.

Linda G. Poole,

Certifying Officer, Division of Trade Adjustment Assistance.

[FR Doc. E8–16071 Filed 7–14–08; 8:45 am]

BILLING CODE 4510–FN–P

LIBRARY OF CONGRESS

Copyright Royalty Board

[Docket No. 2007–3 CRB CD 2004–2005]

Distribution of the 2004 and 2005 Cable Royalty Funds

AGENCY: Copyright Royalty Board, Library of Congress.

ACTION: Notice announcing commencement of Phase I distribution proceeding with request for Petitions to Participate.

SUMMARY: The Copyright Royalty Judges are announcing the commencement of a proceeding to determine the Phase I distribution of 2004 and 2005 royalties collected under the cable statutory license. The Judges are also announcing the date by which a party who wishes to participate in this distribution proceeding must file its Petition to Participate and the accompanying $150 filing fee.

DATES: Petitions to Participate and the filing fee are due on or before August 14, 2008.

ADDRESSES: An original, five copies, and an electronic copy in Portable Document Format (PDF) on a CD of the Petition to Participate, along with the $150 filing fee, may be delivered to the Copyright Royalty Board by either mail or hand delivery. Petitions to Participate and the $150 filing fee may not be delivered by an overnight delivery service other than the U.S. Postal Service Express Mail. If by mail (including overnight delivery), Petitions to Participate, along with the $150 filing fee, must be addressed to: Copyright Royalty Board, P.O. 70977, Washington, DC 20024–0977. If hand delivered by a private party, Petitions to Participate, along with the $150 filing fee, must be brought to the Library of Congress, James Madison Memorial Building, LM–401, 101 Independence Avenue, SE., Washington, DC 20559–6000. If delivered by a commercial courier, Petitions to Participate, along with the $150 filing fee, must be delivered to the Congressional Courier Acceptance Site, located at 2nd and D Street, NE., Washington, DC. The envelope must be addressed to: Copyright Royalty Board, Library of Congress, James Madison Memorial Building, LM–403, 101 Independence Avenue, SE., Washington, DC 20559–6000.

FOR FURTHER INFORMATION CONTACT: LaKeshia Brent, CRB Program Specialist, by telephone at (202) 707–7658 or e-mail at *crb@loc.gov.*

SUPPLEMENTARY INFORMATION:

Background

Each year, semiannually, cable systems must submit royalty payments to the Copyright Office as required by the cable statutory license for the privilege of retransmitting over-the-air television and radio broadcast signals. 17 U.S.C. 111. These royalties are then distributed to copyright owners whose works were included in such retransmissions and who timely filed a claim for royalties. Distribution of the royalties for each calendar year are determined by the Copyright Royalty Judges (''Judges'') in two phases. At Phase I, the royalties are divided among the representatives of the major categories of copyrightable content (movies, sports programming, music, etc.) requesting the distribution. At Phase II, the royalties are divided among the various copyright owners within each category.

This Notice announcing the commencement of a proceeding under 17 U.S.C. 803(b)(1) for distribution of cable royalties collected for 2004 and 2005 is confined to Phase I.

Commencement of Phase I Proceeding

Consistent with 17 U.S.C. 804(b)(8), the Copyright Royalty Judges determine that a Phase I controversy exists as to the distribution of the 2004 and 2005 cable royalties. We reach this determination, in this instance, for two reasons. First, several interested parties have represented to us that a Phase I controversy exists for these years. *See* Petition to Declare Controversy and Initiate a Phase I Proceeding for the Distribution of the 2004 and 2005 Cable Royalty Funds filed by the Motion Picture Association of America, Inc. (''MPAA'') (filed July 16, 2007); and comments filed by the following parties in Docket No. 2007–3 CRB CD 2004–2005: Independent Producers Group (filed February 28, 2008); a comment filed jointly by Program Suppliers, Joint Sports Claimants, Public Television Claimants, National Association of Broadcasters, American Society of Composers, Authors and Publishers, Broadcast Music, Inc., SESAC, Inc., National Public Radio and Canadian Claimants Group (filed February 29, 2008). Second, to date we have not received notification that any settlements have been reached for either of these years, nor have we received motions for final distribution.

The Judges are consolidating the 2004 and 2005 royalty years into a single proceeding. We note that the Librarian routinely consolidated multiple royalty years into a single proceeding in order to maximize the efficiencies associated

with the distribution process. We see no reason to deviate from this practice in this instance because there appear to be no unusual issues associated with these years that would make a consolidated proceeding unduly complex. *See* MPAA Petition to Declare a Controversy at 2 (''anticipate that same, or closely similar, issues will be presented for both years''). Therefore, consolidation of these two years represents the most administratively efficient manner in which to determine the distribution of these royalty funds.

Petitions To Participate

Petitions to Participate must be filed in accordance with § 351.1(b) of the Judges' regulations. *See* 37 CFR 351.1(b). Petitions to Participate submitted by interested parties whose claims do not exceed $1,000 [1] must contain a statement that the party will not seek a distribution of more than $1,000. No filing fee is required for these parties. We note, however, that interested parties with claims exceeding one thousand dollars ($1,000) must submit a filing fee of one hundred and fifty dollars ($150) with their Petition to Participate or it will be rejected. Cash will not be accepted; therefore, parties must pay the filing fee with a check or money order made payable to the ''Copyright Royalty Board.'' If a check is returned for lack of sufficient funds, the corresponding Petition to Participate will be dismissed.

Further procedural matters, including scheduling, will be addressed after Petitions to Participate have been received.

Note that in accordance with 37 CFR 350.2 (Representation), only attorneys who are members of the bar in one or more states and in good standing will be allowed to represent parties before the Copyright Royalty Judges, unless the party is an individual who represents herself or himself.

Dated: July 10, 2008.

James Scott Sledge,

Chief Copyright Royalty Judge.

[FR Doc. E8–16137 Filed 7–14–08; 8:45 am]

BILLING CODE 1410–72–P

[1] The Copyright Royalty Judges Program Technical Corrections Act, Public Law No. 109–303, changed the amount from $10,000 to $1,000.

NATIONAL ARCHIVES AND RECORDS ADMINISTRATION

Records Schedules; Availability and Request for Comments

AGENCY: National Archives and Records Administration (NARA).

ACTION: Notice of availability of proposed records schedules; request for comments.

SUMMARY: The National Archives and Records Administration (NARA) publishes notice at least once monthly of certain Federal agency requests for records disposition authority (records schedules). Once approved by NARA, records schedules provide mandatory instructions on what happens to records when no longer needed for current Government business. They authorize the preservation of records of continuing value in the National Archives of the United States and the destruction, after a specified period, of records lacking administrative, legal, research, or other value. Notice is published for records schedules in which agencies propose to destroy records not previously authorized for disposal or reduce the retention period of records already authorized for disposal. NARA invites public comments on such records schedules, as required by 44 U.S.C. 3303a(a).

DATES: Requests for copies must be received in writing on or before August 14, 2008. Once the appraisal of the records is completed, NARA will send a copy of the schedule. NARA staff usually prepare appraisal memorandums that contain additional information concerning the records covered by a proposed schedule. These, too, may be requested and will be provided once the appraisal is completed. Requesters will be given 30 days to submit comments.

ADDRESSES: You may request a copy of any records schedule identified in this notice by contacting the Life Cycle Management Division (NWML) using one of the following means:

Mail: NARA (NWML), 8601 Adelphi Road, College Park, MD 20740–6001.

E-mail: requestschedule@nara.gov.

Fax: 301–837–3698.

Requesters must cite the control number, which appears in parentheses after the name of the agency which submitted the schedule, and must provide a mailing address. Those who desire appraisal reports should so indicate in their request.

FOR FURTHER INFORMATION CONTACT: Laurence Brewer, Director, Life Cycle Management Division (NWML), National Archives and Records Administration, 8601 Adelphi Road, College Park, MD 20740–6001. Telephone: 301–837–1539. E-mail: *records.mgt@nara.gov*.

SUPPLEMENTARY INFORMATION: Each year Federal agencies create billions of records on paper, film, magnetic tape, and other media. To control this accumulation, agency records managers prepare schedules proposing retention periods for records and submit these schedules for NARA's approval, using the Standard Form (SF) 115, Request for Records Disposition Authority. These schedules provide for the timely transfer into the National Archives of historically valuable records and authorize the disposal of all other records after the agency no longer needs them to conduct its business. Some schedules are comprehensive and cover all the records of an agency or one of its major subdivisions. Most schedules, however, cover records of only one office or program or a few series of records. Many of these update previously approved schedules, and some include records proposed as permanent.

The schedules listed in this notice are media neutral unless specified otherwise. An item in a schedule is media neutral when the disposition instructions may be applied to records regardless of the medium in which the records are created and maintained. Items included in schedules submitted to NARA on or after December 17, 2007, are media neutral unless the item is limited to a specific medium. (See 36 CFR 1228.24(b)(3).)

No Federal records are authorized for destruction without the approval of the Archivist of the United States. This approval is granted only after a thorough consideration of their administrative use by the agency of origin, the rights of the Government and of private persons directly affected by the Government's activities, and whether or not they have historical or other value.

Besides identifying the Federal agencies and any subdivisions requesting disposition authority, this public notice lists the organizational unit(s) accumulating the records or indicates agency-wide applicability in the case of schedules that cover records that may be accumulated throughout an agency. This notice provides the control number assigned to each schedule, the total number of schedule items, and the number of temporary items (the records proposed for destruction). It also includes a brief description of the temporary records. The records schedule itself contains a full description of the records at the file unit level as well as their disposition. If NARA staff has prepared an appraisal memorandum for the schedule, it too includes information about the records. Further information about the disposition process is available on request.

Schedules Pending

1. Department of Health and Human Services, Food and Drug Administration (N1–88–07–2, 16 items, 13 temporary items). Guidance and regulation development records; publication change requests; non-substantive program subject files; program management files; adverse event reports relating to agency regulated products; and regulated products registration and listing records. Proposed for permanent retention are final guidance documents, internal program directives and procedures manuals, and substantive program subject files.

2. Department of Homeland Security, Management Directorate (N1–563–08–10, 4 items, 3 temporary items). Classification management records relating to declassification plans, requests, and reviews. Proposed for permanent retention are security classification guides.

3. Department of Homeland Security, United States Citizenship and Immigration Services (N1–566–08–10, 1 item, 1 temporary item). Master file associated with an electronic information system that stores biometric images (photograph, fingerprint, and signature) used to verify the identity of registered resident aliens and for preventing illegal entry into the United States.

4. Department of Homeland Security, United States Citizenship and Immigration Services (N1–566–08–15, 1 item, 1 temporary item). Master file associated with an electronic information system that processes and tracks applications by individuals for naturalization and/or citizenship. Data in the system is downloaded to the USCIS Central Index System, which was previously approved for permanent retention.

5. Department of the Interior, Bureau of Reclamation (N1–115–08–9, 2 items, 2 temporary items). Master files of the Supervisory Control and Data Acquisition systems and verification backups of files. These systems collect real time data used to operate and maintain water storage and hydroelectric power generation.

6. Department of the Interior, United States Geological Survey (N1–57–08–7, 12 items, 6 temporary items). Geology Discipline records including geology research project development, demonstration, distribution, assessment, testing, and related research functions. Proposed for permanent retention are significant research records and related indexes.

7. Department of Justice, Agency-wide (N1–60–08–21, 1 item, 1 temporary item). Master file for an electronic personnel locator system used for collaboration purposes and to contact personnel during emergency situations.

8. Department of Justice, Bureau of Alcohol, Tobacco, Firearms and Explosives (N1–436–08–4, 1 item, 1 temporary item). Master file of the Forensics Administrative Caseload and Evidence Tracking System, which tracks caseload status for submitted evidence.

9. Department of Justice, Federal Bureau of Investigation (N1–65–08–17, 1 item, 1 temporary item). This schedule requests authority to destroy case 29J–PG–70390, which pertains exclusively to the investigation of the captioned individual. This request responds to a Federal Pre-Trial Diversion Program court order to delete the records of the captioned individual.

10. Department of Justice, Federal Bureau of Investigation (N1–65–08–18, 1 item, 1 temporary item). This schedule requests authority to destroy case 46B–DL–87279, which pertains exclusively to the investigation of the captioned individual. This request responds to a Federal Pre-Trial Diversion Program court order to delete the records of the captioned individual.

11. Department of Justice, Federal Bureau of Investigation (N1–65–08–19, 2 items, 2 temporary items). Records of the health care programs unit, including equipment maintenance and non-employee individual health records.

12. Department of the Navy, Naval Criminal Investigative Service (N1–NU–07–8, 4 items, 4 temporary items). Forensic lab records, including reports, case notes, collected data and fingerprint records.

13. Department of the Treasury, Financial Management Service (N1–425–08–1, 32 items, 29 temporary items). Records of the Debt Management Services' Office of the Assistant Commissioner and Debt Program Division, including reporting records, background files, legislative proposal records, program development records, and customer interaction files for the Treasury Offset Program. Proposed for permanent retention are two series of briefing books covering program administration and policies and final debt collection activity reports. The proposed disposition instructions are limited to paper records, except where an electronic format is specified, including Disclosure Awareness Training records.

14. Environmental Protection Agency, Agency-wide (N1–412–08–8, 3 items, 3 temporary items). Web site records, including site management and operations records, log files, and Web content that is not unique (*i.e.*, the record copy is captured elsewhere).

15. Federal Communications Commission, Office of Engineering and Technology (N1–173–08–2, 1 item, 1 temporary item). Master files of an electronic information system used to track applications for experimental licenses.

16. Federal Communications Commission, Office of Engineering and Technology (N1–173–08–3, 1 item, 1 temporary item). Master files of an electronic information system documenting technical reports.

17. Federal Communications Commission, Office of Engineering and Technology (N1–173–08–6, 1 item, 1 temporary item). Master file of an electronic information system used to track the receipt and disposition of information related to equipment authorization enforcement.

18. Federal Energy Regulatory Commission, Agency-wide (N1–138–08–1, 6 items, 1 temporary item). This schedule authorizes the agency to apply the existing disposition instructions to records series regardless of the recordkeeping medium. Included are Secretary's meeting folders containing agendas and drafts of documents discussed and considered. Paper recordkeeping copies of these records were previously approved for disposal. Also included are minutes of formal Commission meetings and transcripts and digital recordings, for which paper and analog recordkeeping copies previously were approved as permanent.

19. Federal Maritime Commission, Office of the General Counsel (N1–358–08–8, 8 items, 8 temporary items). International affairs files, court and docket case files, legislative correspondence, and subject files.

20. Millennium Challenge Corporation, Agency-wide (N1–561–08–4, 5 items, 5 temporary items). Master files and outputs for electronic information systems used by the agency for performance measuring, evaluation of policy performance of candidate countries, and sharing of information on countries requesting agency partnerships.

21. National Commission on Libraries and Information Science, Agency-wide (N1–220–08–2, 9 items, 9 temporary items). Correspondence files, subject files, task force files, and related records documenting program activities relating to library and information science. The records will be donated to the Special Collections Library at the University of Michigan. The proposed disposition instructions are limited to paper records.

22. Nuclear Regulatory Commission, Office of Federal and State Materials and Environmental Management Programs (N1–431–08–7, 1 item, 1 temporary item). Master file of an electronic information system used to manage information on requests from licensees for authorization to dispose of low level nuclear wastes.

23. Nuclear Regulatory Commission, Office of Federal and State Materials and Environmental Management Programs (N1–431–08–8, 3 items, 3 temporary items). Master file and outputs of an electronic information system used to track requests for reciprocity between jurisdictions in regard to licensing of radioactive materials for medical and industrial testing uses.

Dated: July 10, 2008.

Michael J. Kurtz,

Assistant Archivist for Records Services—Washington, DC.

[FR Doc. E8–16236 Filed 7–14–08; 8:45 am]

BILLING CODE 7515–01–P

NATIONAL INSTITUTE FOR LITERACY

National Institute for Literacy Advisory Board

AGENCY: National Institute for Literacy.

ACTION: Notice of a closed meeting.

SUMMARY: This notice sets forth the schedule and proposed agenda of an upcoming closed meeting of the National Institute for Literacy Advisory Board. The notice also describes the functions of the Committee. Notice of this meeting is required by Section 10(a)(2) of the Federal Advisory Committee Act and is intended to notify the public of its opportunity to attend.

DATES: August 11, 2008.

Time: Closed meeting 9 a.m. to 4 p.m.

ADDRESSES: The National Institute for Literacy, 1775 I St., NW., Suite 730, Washington, DC 20006.

FOR FURTHER INFORMATION CONTACT: Steve Langley, Staff Assistant, the National Institute for Literacy; 1775 I St. NW., Suite 730; phone: (202) 233–2025; fax: (202) 233–2050; e-mail: *slangley@nifl.gov*.

SUPPLEMENTARY INFORMATION: The National Institute for Literacy Advisory Board is authorized by section 242 of the Workforce Investment Act of 1998, Pub. L. 105–220 (20 U.S.C. 9252). The Board consists of 10 individuals appointed by the President with the advice and consent of the Senate. The Board advises and makes recommendations to the Interagency Group that administers the Institute. The Interagency Group is composed of the Secretaries of Education, Labor, and Health and Human Services. The Interagency Group considers the Board's recommendations in planning the goals of the Institute and in implementing any programs to achieve those goals. Specifically, the Board performs the following functions: (a) Makes recommendations concerning the appointment of the Director and the staff of the Institute; (b) provides independent advice on operation of the Institute; and (c) receives reports from the Interagency Group and the Institute's Director.

The purpose of this meeting is to discuss the national search for the position of Director. The discussion is likely to disclose information of a personal nature where disclosure would constitute a clearly unwarranted invasion of personnel privacy. The discussion must therefore be held in closed session under exemptions 2 and 6 of the Government in the Sunshine Act, 5 U.S.C. 552b(c)(2) and (6). A summary of the activities at the closed session and related matters that are informative to the public and consistent with the policy of 5 U.S.C. 552b will be available to the public within 14 days of the meeting.

Request for Public Written Comment. The public may send written comments to the Advisory Board no later than 5 p.m. on August 4, 2008, to Steve Langley at the National Institute for Literacy, 1775 I St., NW., Suite 730, Washington, DC 20006, e-mail: *slangley@nifl.gov*.

Records are kept of all Committee proceedings and are available for public inspection at the National Institute for Literacy, 1775 I St., NW., Suite 730, Washington, DC 20006, from the hours of 9 a.m. to 5 p.m., Eastern Time Monday through Friday.

Electronic Access to This Document: You may view this document, as well as all other documents of this Department published in the **Federal Register**, in text or Adobe Portable Document Format (PDF) on the Internet at the following site: *http://www.ed.gov/news/federegister*.

To use PDF you must have Adobe Acrobat Reader, which is available free at this site. If you have questions about using PDF, call the U.S. Government Printing Office (GPO), toll free at 1–888–293–6498; or in the Washington, DC, area at (202) 512–1530.

Note: The official version of this document is the document published in the **Federal Register**. Free Internet access to the official edition of the **Federal Register** and the Code of Federal Regulations is available on GPO Access at: *http://www.gpoaccess.gov/nara/index.html*.

Dated: July 9, 2008.

Sandra Baxter,

Director, The National Institute for Literacy.

[FR Doc. E8–16029 Filed 7–14–08; 8:45 am]

BILLING CODE 6055–01–P

NATIONAL SCIENCE FOUNDATION

Notice of Permits Issued Under the Antarctic Conservation Act of 1978

AGENCY: National Science Foundation.

ACTION: Notice of permits issued under the Antarctic Conservation Act of 1978, Public Law 95–541.

SUMMARY: The National Science Foundation (NSF) is required to publish notice of permits issued under the Antarctic Conservation Act of 1978. This is the required notice.

FOR FURTHER INFORMATION CONTACT: Nadene G. Kennedy, Permit Office, Office of Polar Programs, Rm. 755, National Science Foundation, 4201 Wilson Boulevard, Arlington, VA 22230.

SUPPLEMENTARY INFORMATION: On June 9, 2008, the National Science Foundation published a notice in the **Federal Register** of permit applications received. Permits were issued on July 9, 2008 to: Erica Wikander, Permit No. 2009–007; Brian Stone, Permit No. 2009–008; Rennie S. Holt, Permit No. 2009–009.

Nadene G. Kennedy,

Permit Officer.

[FR Doc. E8–16025 Filed 7–14–08; 8:45 am]

BILLING CODE 7555–01–P

NUCLEAR REGULATORY COMMISSION

[Docket No. 040–08778; License No. SMB–1393; EA–08–054]

In the Matter of Chevron Environmental Management Company, Washington, PA, Decommissioning Project Site; Confirmatory Order Modifying License (Effective Immediately)

I

Chevron Environmental Management Company (CEMC or Licensee) is the holder of License No. SMB–1393 issued by the U.S. Nuclear Regulatory Commission (NRC or Commission) pursuant to 10 CFR Part 40. The license authorizes the decommissioning of the Washington, PA, Decommissioning Project in accordance with conditions specified therein. The facility is located in Washington, Pennsylvania.

This confirmatory order is the result of an agreement reached during an alternative dispute resolution (ADR) mediation session conducted on June 5, 2008.

II

On July 19, 2007, the NRC's Office of Investigations (OI) issued its investigative report regarding whether a radiation safety employee (RSE) was the subject of employment discrimination in violation of 10 CFR 40.7, ''Employee protection.'' In OI Report No. 1–2006–054, OI concluded that a RSE was discriminated against, in part, for raising concerns regarding the transportation of potentially contaminated soil samples over public roads and the monitoring of potentially radioactive airborne dust caused by the construction work activities at the site. By letter dated February 29, 2008, the NRC identified to the Licensee an apparent violation of 10 CFR 40.7, and offered CEMC the opportunity to provide a written response, attend a pre-decisional enforcement conference, or to request alternative dispute resolution (ADR) in which a neutral mediator with no decision-making authority would facilitate discussions between the NRC and CEMC and, if possible, assist the NRC and CEMC in reaching an agreement. CEMC chose to participate in ADR.

III

On June 5, 2008, the NRC and CEMC met in an ADR session in Washington, D.C., mediated by a professional mediator, arranged through Cornell University's Institute on Conflict Resolution. This confirmatory order is issued pursuant to the agreement reached during the ADR process. The elements of the agreement consisted of the following:

1. By no later than thirty (30) calendar days after the issuance of the confirmatory order, a member of CEMC's senior management responsible for the Washington site will, in writing, communicate CEMC's policy, and the expectations of management, to the Washington site workforce regarding their rights to raise concerns without fear of retaliation.

2. By no later than thirty (30) calendar days after the issuance of this confirmatory order, CEMC shall distribute a questionnaire to all employees at the Washington site to assess, in part, whether employees understand their rights to raise concerns and solicit their willingness to raise nuclear safety concerns, if any.

3. By no later than thirty (30) days after the issuance of this confirmatory order, CEMC agrees to implement a new requirement of its contractors (including subcontractors) at the Washington site whereby the contractors would be required to affirm to CEMC, in writing, at the time that any significant job action is being taken against a Washington site employee, that such action is not being implemented in retaliation for the employee raising safety-related concerns or in retaliation for filing a safety-related complaint either internally or externally, and to affirm that the job action was taken in compliance with 10 CFR 40.7, ''Employee Protection.''

4. By no later than thirty (30) calendar days after the issuance of this confirmatory order, CEMC agrees to enter into a written agreement with its contractors performing work at the Washington site that requires compliance with 10 CFR 40.7, ''Employee Protection.''

5. By no later than sixty (60) calendar days after the issuance of this confirmatory order, CEMC agrees to provide training conducted by its counsel to all Washington site supervisory employees relating to 10 CFR 40.7, ''Employee Protection'' and how to foster a safety-conscious work environment.

6. By no later than seventy five (75) calendars days after the issuance of this confirmatory order, CEMC shall hold one or more meetings with employees at the Washington site to emphasize the company's policy and management's expectation that employees can raise any nuclear safety concerns without fear of retaliation.

On July 2, 2008, CEMC consented to issuing this confirmatory order with the commitments, as described in Section V below. CEMC further agreed that this confirmatory order is to be effective upon issuance and it has waived its right to a hearing.

IV

Since CEMC has agreed to take additional actions to address NRC concerns, as set forth in Item III above, and NRC has concluded that its concerns can be resolved through issuance of this confirmatory order and thereby has agreed not to pursue any further enforcement action for this issue and will not count this matter as previous enforcement for the purposes of assessing potential future enforcement action civil penalty assessments in accordance with Section VI.C of the Enforcement Policy.

I find that the Licensee's commitments as set forth in Section V are acceptable and necessary and conclude that with these commitments the public health and safety are reasonably assured. In view of the foregoing, I have determined that the public health and safety require that the Licensee's commitments be confirmed by this confirmatory order. Based on the above and the Licensee's consent, this confirmatory order is immediately effective upon issuance. By no later than thirty (30) calendar days after the completion of the requirements in Section V, CEMC is required to notify the NRC in writing and summarizing its actions.

V

Accordingly, pursuant to Sections 103, 161b, 161i, 161o, 182, and 186 of the Atomic Energy Act of 1954, as amended, and the Commission's regulations in 10 CFR 2.202 and 10 CFR Part 50, *it is hereby ordered, effective immediately, that License No. SMB–1393 is modified as follows:*

1. By no later than thirty (30) calendar days after the issuance of this confirmatory order, a member of CEMC's senior management responsible for the Washington site will, in writing, communicate CEMC's policy, and the expectations of management, to the Washington site workforce regarding their rights to raise concerns without fear of retaliation.

2. By no later than thirty (30) calendar days after the issuance of this confirmatory order, CEMC shall distribute a questionnaire to all employees at the Washington site to assess, in part, whether employees understand their rights to raise concerns and solicit their willingness to raise nuclear safety concerns, if any.

3. By no later than thirty (30) days after the issuance of this confirmatory order, CEMC agrees to implement a new requirement of its contractors (including subcontractors) at the Washington site whereby the contractors would be required to affirm to CEMC, in writing, at the time that any significant job action is being taken against a Washington site employee, that such action is not being implemented in retaliation for the employee raising safety-related concerns or in retaliation for filing a safety-related complaint either internally or externally, and to affirm that the job action was taken in compliance with 10 CFR 40.7, ''Employee Protection.''

4. By no later than thirty (30) calendar days after the issuance of this confirmatory order, CEMC agrees to enter into a written agreement with its contractors performing work at the Washington site that requires compliance with 10 CFR 40.7, ''Employee Protection.''

5. By no later than sixty (60) calendar days after the issuance of this confirmatory order, CEMC agrees to provide training conducted by its counsel to all Washington site supervisory employees relating to 10 CFR 40.7, ''Employee Protection'' and how to foster a safety-conscious work environment.

6. By no later than seventy five (75) calendars days after the issuance of this confirmatory order, CEMC shall hold one or more meetings with employees at the Washington site to emphasize the company's policy and management's expectation that employees can raise any nuclear safety concerns without fear of retaliation.

VI

Any person adversely affected by this confirmatory order, other than the Licensee, may request a hearing within 20 days of its issuance. Where good cause is shown, consideration will be given to extending the time to request a hearing. A request for extension of time must be made in writing to the Director, Office of Enforcement, U.S. Nuclear Regulatory Commission, Washington, DC 20555, and include a statement of good cause for the extension.

A request for a hearing must be filed in accordance with the NRC E-Filing rule, which the NRC promulgated in August, 2007, 72 Fed. Reg. 49, 139 (Aug. 8, 2007). The E-Filing process requires participants to submit and serve documents over the Internet or, in some cases, to mail copies on electronic optical storage media. Participants may not submit paper copies of their filings unless they seek a waiver in accordance with the procedures described below.

To comply with the procedural requirements associated with E-Filing, at least five (5) days prior to the filing deadline the requestor must contact the Office of the Secretary by e-mail at *hearingdocket@nrc.gov,* or by calling (301) 415–1677, to request (1) a digital ID certificate, which allows the participant (or its counsel or representative) to digitally sign documents and access the E-Submittal server for any NRC proceeding in which it is participating; and/or (2) creation of an electronic docket for the proceeding (even in instances when the requestor (or its counsel or representative) already holds an NRC-issued digital ID certificate). Each requestor will need to download the Workplace Forms Viewer™ to access the Electronic Information Exchange (EIE), a component of the E-Filing system. The Workplace Forms Viewer™ is free and is available at *http://www.nrc.gov/site-help/e-submittals/install-viewer.html.* Information about applying for a digital ID certificate also is available on NRC's public Web site at *http://www.nrc.gov/site-help/e-submittals/apply-certificates.html.*

Once a requestor has obtained a digital ID certificate, had a docket created, and downloaded the EIE viewer, it can then submit a request for a hearing through EIE. Submissions should be in Portable Document Format (PDF) in accordance with NRC guidance available on the NRC public Web site at *http://www.nrc.gov/site-help/e-submittals.html.* A filing is considered complete at the time the filer submits its document through EIE. To be timely, electronic filings must be submitted to the EIE system no later than 11:59 p.m. Eastern Time on the due date. Upon receipt of a transmission, the E-Filing system time-stamps the document and sends the submitter an e-mail notice confirming receipt of the document. The EIE system also distributes an e-mail notice that provides access to the document to the NRC Office of the General Counsel and any others who have advised the Office of the Secretary that they wish to participate in the proceeding, so that the filer need not serve the document on those participants separately. Therefore, any others who wish to participate in the proceeding (or their counsel or representative) must apply for and receive a digital ID certificate before a hearing request is filed so that they may obtain access to the document via the E-Filing system.

A person filing electronically may seek assistance through the ''Contact Us'' link located on the NRC Web site at *http://www.nrc.gov/site-help/e-submittals.html* or by calling the NRC technical help line, which is available between 8:30 a.m. and 4:15 p.m., Eastern Time, Monday through Friday. The help line number is (800) 397–4209 or locally, (301) 415–4737.

Participants who believe that they have good cause for not submitting documents electronically must file a motion, in accordance with 10 CFR 2.302(g), with their initial paper filing requesting authorization to continue to submit documents in paper format. Such filings must be submitted by (1) first-class mail addressed to the Office of the Secretary of the Commission, U.S. Nuclear Regulatory Commission, Washington, DC 20555–0001, Attention: Rulemaking and Adjudications Staff; or (2) courier, express mail, or expedited delivery service to the Office of the Secretary, Sixteenth Floor, One White Flint North, 11555 Rockville Pike, Rockville, MD, 20852, Attention: Rulemaking and Adjudications Staff. Participants filing a document in this manner are responsible for serving the document on all other participants. Filing is considered complete by first-class mail as of the time of deposit in the mail, or by courier, express mail, or expedited delivery service upon depositing the document with the provider of the service.

Documents submitted in adjudicatory proceedings will appear in NRC's electronic hearing docket which is available to the public at *http://ehd.nrc.gov/EHD_Proceeding/home.asp*, unless excluded pursuant to an order of the Commission, an Atomic Safety and Licensing Board, or a Presiding Officer. Participants are requested not to include personal privacy information, such as Social Security numbers, home addresses, or home phone numbers in their filings. With respect to copyrighted works, except for limited excerpts that serve the purpose of the adjudicatory filings and would constitute a Fair Use application, Participants are requested not to include copyrighted materials in their works.

If a person (other than the Licensee) requests a hearing, that person shall set forth with particularity the manner in which his interest is adversely affected by this Order and shall address the criteria set forth in 10 CFR 2.309(d) and (f).

If the hearing is requested by a person whose interest is adversely affected, the Commission will issue an Order designating the time and place of any hearing. If a hearing is held, the issue to be considered at such hearing shall be whether this confirmatory order should be sustained. In the absence of any request for hearing, or written approval of an extension of time in which to request a hearing, the provisions specified in Section V above shall be final 20 days from the date of this Order without further order or proceedings. If an extension of time for requesting a hearing has been approved, the provisions specified in Section V shall be final when the extension expires if a hearing request has not been received. A request for hearing shall not stay the immediate effectiveness of this order.

Dated this 8th day of July, 2008.

For the Nuclear Regulatory Commission.

Cynthia A. Carpenter,

Director, Office of Enforcement.

[FR Doc. E8–16090 Filed 7–14–08; 8:45 am]

BILLING CODE 7590–01–P

NUCLEAR REGULATORY COMMISSION

Biweekly Notice; Applications and Amendments to Facility Operating Licenses; Involving No Significant Hazards Considerations

I. Background

Pursuant to section 189a.(2) of the Atomic Energy Act of 1954, as amended (the Act), the U.S. Nuclear Regulatory Commission (the Commission or NRC staff) is publishing this regular biweekly notice. The Act requires the Commission publish notice of any amendments issued, or proposed to be issued and grants the Commission the authority to issue and make immediately effective any amendment to an operating license upon a determination by the Commission that such amendment involves no significant hazards consideration, notwithstanding the pendency before the Commission of a request for a hearing from any person.

This biweekly notice includes all notices of amendments issued, or proposed to be issued from June 19, 2008 to July 2, 2008. The last biweekly notice was published on July 1, 2008 (73 FR 370501).

Notice of Consideration of Issuance of Amendments to Facility Operating Licenses, Proposed No Significant Hazards Consideration Determination, and Opportunity for a Hearing

The Commission has made a proposed determination that the following amendment requests involve no significant hazards consideration. Under the Commission's regulations in 10 CFR 50.92, this means that operation of the facility in accordance with the proposed amendment would not (1) involve a significant increase in the probability or consequences of an accident previously evaluated; or (2) create the possibility of a new or different kind of accident from any accident previously evaluated; or (3) involve a significant reduction in a margin of safety. The basis for this proposed determination for each amendment request is shown below.

The Commission is seeking public comments on this proposed determination. Any comments received within 30 days after the date of publication of this notice will be considered in making any final determination.

Normally, the Commission will not issue the amendment until the expiration of 60 days after the date of publication of this notice. The Commission may issue the license amendment before expiration of the 60-day period provided that its final determination is that the amendment involves no significant hazards consideration. In addition, the Commission may issue the amendment prior to the expiration of the 30-day comment period should circumstances change during the 30-day comment period such that failure to act in a timely way would result, for example in derating or shutdown of the facility. Should the Commission take action prior to the expiration of either the comment period or the notice period, it will publish in the **Federal Register** a notice of issuance. Should the Commission make a final No Significant Hazards Consideration Determination, any hearing will take place after issuance. The Commission expects that the need to take this action will occur very infrequently.

Written comments may be submitted by mail to the Chief, Rulemaking, Directives and Editing Branch, Division of Administrative Services, Office of Administration, U.S. Nuclear Regulatory Commission, Washington, DC 20555–0001, and should cite the publication date and page number of this **Federal Register** notice. Written comments may also be delivered to Room 6D22, Two White Flint North, 11545 Rockville Pike, Rockville, Maryland, from 7:30 a.m. to 4:15 p.m. Federal workdays. Copies of written comments received may be examined at the Commission's Public Document Room (PDR), located at One White Flint North, Public File Area O1F21, 11555 Rockville Pike (first floor), Rockville, Maryland. The filing of requests for a hearing and petitions for leave to intervene is discussed below.

Within 60 days after the date of publication of this notice, person(s) may file a request for a hearing with respect to issuance of the amendment to the subject facility operating license and any person whose interest may be affected by this proceeding and who wishes to participate as a party in the proceeding must file a written request via electronic submission through the NRC E–Filing system for a hearing and a petition for leave to intervene. Requests for a hearing and a petition for leave to intervene shall be filed in accordance with the Commission's ''Rules of Practice for Domestic Licensing Proceedings'' in 10 CFR part 2. Interested person(s) should consult a current copy of 10 CFR 2.309, which is available at the Commission's PDR, located at One White Flint North, Public File Area 01F21, 11555 Rockville Pike (first floor), Rockville, Maryland. Publicly available records will be accessible from the Agencywide Documents Access and Management System's (ADAMS) Public Electronic Reading Room on the Internet at the NRC Web site, *http://www.nrc.gov/reading-rm/doc-collections/cfr/*. If a request for a hearing or petition for leave to intervene is filed within 60 days, the Commission or a presiding officer designated by the Commission or by the Chief Administrative Judge of the Atomic Safety and Licensing Board Panel, will rule on the request and/or petition; and the Secretary or the Chief Administrative Judge of the Atomic Safety and Licensing Board will issue a notice of a hearing or an appropriate order.

As required by 10 CFR 2.309, a petition for leave to intervene shall set forth with particularity the interest of the petitioner in the proceeding, and how that interest may be affected by the results of the proceeding. The petition should specifically explain the reasons why intervention should be permitted with particular reference to the following general requirements: (1) The name, address, and telephone number of the requestor or petitioner; (2) the nature of the requestor's/petitioner's right under the Act to be made a party to the proceeding; (3) the nature and extent of the requestor's/petitioner's property, financial, or other interest in the proceeding; and (4) the possible effect of any decision or order which may be entered in the proceeding on the requestor's/petitioner's interest. The petition must also set forth the specific contentions which the petitioner/requestor seeks to have litigated at the proceeding.

Each contention must consist of a specific statement of the issue of law or fact to be raised or controverted. In addition, the petitioner/requestor shall provide a brief explanation of the bases for the contention and a concise statement of the alleged facts or expert opinion which support the contention and on which the petitioner/requestor intends to rely in proving the contention at the hearing. The petitioner/requestor must also provide references to those specific sources and documents of which the petitioner is aware and on which the petitioner/requestor intends to rely to establish those facts or expert opinion. The petition must include sufficient information to show that a genuine dispute exists with the applicant on a material issue of law or fact. Contentions shall be limited to matters within the scope of the amendment under consideration. The contention must be one which, if proven, would entitle the petitioner/requestor to relief. A petitioner/requestor who fails to satisfy these requirements with respect to at least one

contention will not be permitted to participate as a party.

Those permitted to intervene become parties to the proceeding, subject to any limitations in the order granting leave to intervene, and have the opportunity to participate fully in the conduct of the hearing.

If a hearing is requested, and the Commission has not made a final determination on the issue of no significant hazards consideration, the Commission will make a final determination on the issue of no significant hazards consideration. The final determination will serve to decide when the hearing is held. If the final determination is that the amendment request involves no significant hazards consideration, the Commission may issue the amendment and make it immediately effective, notwithstanding the request for a hearing. Any hearing held would take place after issuance of the amendment. If the final determination is that the amendment request involves a significant hazards consideration, any hearing held would take place before the issuance of any amendment.

A request for hearing or a petition for leave to intervene must be filed in accordance with the NRC E-Filing rule, which the NRC promulgated in August 28, 2007 (72 FR 49139). The E-Filing process requires participants to submit and serve documents over the internet or in some cases to mail copies on electronic storage media. Participants may not submit paper copies of their filings unless they seek a waiver in accordance with the procedures described below.

To comply with the procedural requirements of E-Filing, at least five (5) days prior to the filing deadline, the petitioner/requestor must contact the Office of the Secretary by e-mail at *hearingdocket@nrc.gov*, or by calling (301) 415–1677, to request (1) a digital ID certificate, which allows the participant (or its counsel or representative) to digitally sign documents and access the E-Submittal server for any proceeding in which it is participating; and/or (2) creation of an electronic docket for the proceeding (even in instances in which the petitioner/requestor (or its counsel or representative) already holds an NRC-issued digital ID certificate). Each petitioner/requestor will need to download the Workplace Forms Viewer™ to access the Electronic Information Exchange (EIE), a component of the E-Filing system. The Workplace Forms Viewer™ is free and is available at *http://www.nrc.gov/site-help/e-submittals/install-viewer.html*. Information about applying for a digital ID certificate is available on NRC's public Web site at *http://www.nrc.gov/site-help/e-submittals/apply-certificates.html*.

Once a petitioner/requestor has obtained a digital ID certificate, had a docket created, and downloaded the EIE viewer, it can then submit a request for hearing or petition for leave to intervene. Submissions should be in Portable Document Format (PDF) in accordance with NRC guidance available on the NRC public Web site at *http://www.nrc.gov/site-help/e-submittals.html*. A filing is considered complete at the time the filer submits its documents through EIE. To be timely, an electronic filing must be submitted to the EIE system no later than 11:59 p.m. Eastern Time on the due date. Upon receipt of a transmission, the E–Filing system time-stamps the document and sends the submitter an e-mail notice confirming receipt of the document. The EIE system also distributes an e-mail notice that provides access to the document to the NRC Office of the General Counsel and any others who have advised the Office of the Secretary that they wish to participate in the proceeding, so that the filer need not serve the documents on those participants separately. Therefore, applicants and other participants (or their counsel or representative) must apply for and receive a digital ID certificate before a hearing request/petition to intervene is filed so that they can obtain access to the document via the E–Filing system.

A person filing electronically may seek assistance through the ''Contact Us'' link located on the NRC Web site at *http://www.nrc.gov/site-help/e-submittals.html* or by calling the NRC technical help line, which is available between 8:30 a.m. and 4:15 p.m., Eastern Time, Monday through Friday. The help line number is (800) 397–4209 or locally, (301) 415–4737.

Participants who believe that they have a good cause for not submitting documents electronically must file a motion, in accordance with 10 CFR 2.302(g), with their initial paper filing requesting authorization to continue to submit documents in paper format. Such filings must be submitted by: (1) First class mail addressed to the Office of the Secretary of the Commission, U.S. Nuclear Regulatory Commission, Washington, DC 20555–0001, Attention: Rulemaking and Adjudications Staff; or (2) courier, express mail, or expedited delivery service to the Office of the Secretary, Sixteenth Floor, One White Flint North, 11555 Rockville Pike, Rockville, Maryland 20852, Attention: Rulemaking and Adjudications Staff. Participants filing a document in this manner are responsible for serving the document on all other participants. Filing is considered complete by first-class mail as of the time of deposit in the mail, or by courier, express mail, or expedited delivery service upon depositing the document with the provider of the service.

Non-timely requests and/or petitions and contentions will not be entertained absent a determination by the Commission, the presiding officer, or the Atomic Safety and Licensing Board that the petition and/or request should be granted and/or the contentions should be admitted, based on a balancing of the factors specified in 10 CFR 2.309(c)(1)(i)–(viii). To be timely, filings must be submitted no later than 11:59 p.m. Eastern Time on the due date.

Documents submitted in adjudicatory proceedings will appear in NRC's electronic hearing docket which is available to the public at *http://ehd.nrc.gov/EHD_Proceeding/home.asp*, unless excluded pursuant to an order of the Commission, an Atomic Safety and Licensing Board, or a Presiding Officer. Participants are requested not to include personal privacy information, such as social security numbers, home addresses, or home phone numbers in their filings. With respect to copyrighted works, except for limited excerpts that serve the purpose of the adjudicatory filings and would constitute a Fair Use application, participants are requested not to include copyrighted materials in their submission.

For further details with respect to this amendment action, see the application for amendment which is available for public inspection at the Commission's PDR, located at One White Flint North, Public File Area 01F21, 11555 Rockville Pike (first floor), Rockville, Maryland. Publicly available records will be accessible from the ADAMS Public Electronic Reading Room on the Internet at the NRC Web site, *http://www.nrc.gov/reading-rm/adams.html*. If you do not have access to ADAMS or if there are problems in accessing the documents located in ADAMS, contact the PDR Reference staff at 1 (800) 397–4209, (301) 415–4737 or by e-mail to *pdr@nrc.gov*.

Energy Northwest, Docket No. 50–397, Columbia Generating Station, Benton County, Washington

Date of amendment request: May 7, 2008.

Description of amendment request: The proposed changes would revise Technical Specification (TS) Limiting

Condition for Operation (LCO) 3.10.1, and the associated Bases, to expand its scope to include provisions for temperature excursions greater than 200 degrees F as a consequence of inservice leak and hydrostatic testing, and as a consequence of scram time testing initiated in conjunction with an inservice leak or hydrostatic test, while considering operational conditions to be in Mode 4.

The U.S Nuclear Regulatory Commission (NRC) issued a ''Notice of Availability of Model Safety Evaluation on Technical Specification Improvement To Modify Requirements Regarding LCO 3.10.1, Inservice Leak and Hydrostatic Testing Operation Using the Consolidated Line Item Improvement Process'' in the **Federal Register** on October 27, 2006 (71 FR 63050). The notice referenced a model safety evaluation, a model no significant hazards consideration (NSHC) determination, and a model license amendment request published in the **Federal Register** on August 21, 2006 (71 FR 48561). In its application dated May 7, 2008, the licensee affirmed the applicability of the model NSHC determination which is presented below.

Basis for proposed no significant hazards consideration determination: As required by 10 CFR 50.91(a), an analysis of the issue of NSHC adopted by the licensee is presented below:

Criterion 1: The proposed change does not involve a significant increase in the probability or consequences of an accident previously evaluated.

Technical Specifications currently allow for operation at greater than 200 degrees F while imposing MODE 4 requirements in addition to the secondary containment requirements required to be met. Extending the activities that can apply this allowance will not adversely impact the probability or consequences of an accident previously evaluated. Therefore, the proposed change does not involve a significant increase in the probability or consequences of an accident previously evaluated.

Criterion 2: The proposed change does not create the possibility of a new or different kind of accident from any accident previously evaluated.

Technical Specifications currently allow for operation at greater than 200 degrees F while imposing MODE 4 requirements in addition to the secondary containment requirements required to be met. No new operational conditions beyond those currently allowed by LCO 3.10.1 are introduced. The changes do not involve a physical alteration of the plant (i.e., no new or different type of equipment will be installed) or a change in the methods governing normal plant operation. In addition, the changes do not impose any new or different requirements or eliminate any existing requirements. The changes do not alter assumptions made in the safety analysis. The proposed changes are consistent with the safety analysis assumptions and current plant operating practice. Therefore, the proposed change does not create the possibility of a new or different kind of accident from any accident previously evaluated.

Criterion 3: The proposed change does not involve a significant reduction in a margin of safety.

Technical Specifications currently allow for operation at greater than 200 degrees F while imposing MODE 4 requirements in addition to the secondary containment requirements required to be met. Extending the activities that can apply this allowance will not adversely impact any margin of safety. Allowing completion of inspections and testing and supporting completion of scram time testing initiated in conjunction with an inservice leak or hydrostatic test prior to power operation results in enhanced safe operations by eliminating unnecessary maneuvers to control reactor temperature and pressure. Therefore, the proposed change does not involve a significant reduction in a margin of safety.

The NRC staff has reviewed the analysis adopted by the licensee and, based on this review, it appears that the three standards of 10 CFR 50.92(c) are satisfied. Therefore, the NRC staff proposes to determine that the amendment request involves no significant hazards consideration.

Attorney for licensee: William A. Horin, Esq., Winston & Strawn, 1700 K Street, NW., Washington, DC 20006–3817.

NRC Branch Chief: Thomas G. Hiltz.

PSEG Nuclear LLC, Docket Nos. 50–272 and 50–311, Salem Nuclear Generating Station, Unit Nos. 1 and 2, Salem County, New Jersey

Date of amendment request: March 11, 2008, as supplemented on June 17, 2008.

Description of amendment request: The proposed amendment would revise the requirements for fuel decay time prior to commencing movement of irradiated fuel in the reactor pressure vessel (RPV). Currently, Technical Specification (TS) 3/4.9.3, ''Decay Time,'' requires that: (a) the reactor has been subcritical for at least 100 hours prior to movement of irradiated fuel in the RPV between October 15th through May 15th; and (b) the reactor has been subcritical for at least 168 hours prior to movement of irradiated fuel in the RPV between May 16th and October 14th. The calendar approach is based on average river water temperature which is cooler in the fall through spring months. The proposed amendment would allow fuel movement to commence at 80 hours after the reactor is subcritical between October 15th through May 15th.

Basis for proposed no significant hazards consideration determination: As required by 10 CFR 50.91(a), the licensee, in its letter dated June 17, 2008, has provided its analysis of the issue of no significant hazards consideration, which is presented below:

1. Does the change involve a significant increase in the probability [ ] or consequences of an accident previously evaluated?

Response: No.

The proposed license amendment would allow fuel assemblies to be removed from the reactor core and be stored in the Spent Fuel Pool (SFP) in less time after subcriticality than currently allowed by the Technical Specifications. Decreasing the decay time of the fuel affects the radionuclide make-up of the fuel to be offloaded as well as the amount of decay heat that is present from the fuel at the time of offload. The accident previously evaluated that is associated with the proposed license amendment is the fuel handling accident. Allowing the fuel to be offloaded in less time after subcriticality using actual heat loads does not impact the manner in which the fuel is offloaded. The accident initiator is the dropping of the fuel assembly. Since earlier offload does not affect fuel handling, there is no increase in the probability of occurrence of a Fuel Handling Accident (FHA). The time frame in which the fuel assemblies are moved has been evaluated against the 10 CFR 50.67 dose limits for members of the public, licensee personnel and control room. Additionally, the guidance provided in [Regulatory] Guide 1.183 was used for the selective application of Alternative Source Term. All dose limits are met with the reduced core offload times; and significant margin is maintained, as the minimum decay time prior to movement of fuel for the FHA analysis is 24 hours.

Therefore, the proposed license amendment does not significantly increase the probability [ ] or the consequences of accidents previously evaluated.

2. [Does the change] [c]reate the possibility of a new or different kind of accident from any accident previously evaluated[?]

Response: No.

The proposed license amendment would allow core offload to occur in less time after subcriticality which affects the radionuclide makeup of the fuel to be offloaded as well as the amount of decay heat that is present from the fuel at the time of offload. The radionuclide makeup of the fuel assemblies and the amount of decay heat produced by the fuel assemblies do not currently initiate any accident. A change in the radionuclide makeup of the fuel at the time of core offload or an increase in the decay heat produced by the fuel being offloaded will not cause the initiation of any accident. The accident previously evaluated that is associated with fuel movement is the fuel handling accident; no new accidents are introduced. There is no change to the manner in which fuel is being handled or in the equipment used to offload or store the fuel. The effects of the additional decay heat load have been analyzed. The analysis demonstrates that the existing Spent

Fuel Pool cooling system and associated systems under worst-case circumstances would maintain licensing limits and the integrity of the Spent Fuel Pool.

Therefore, the proposed license amendment does not create the possibility of a new or different kind of accident from any accident previously evaluated.

3. Does the change involve a significant reduction in a margin of safety?

Response: No.

The margin of safety pertinent to the proposed changes is the dose consequences resulting from a fuel handling accident. The shorter decay time prior to fuel movement has been evaluated against 10 CFR 50.67 and all limits continue to be met. All dose limits are met with the reduced core offload times; and significant margin is maintained, as the minimum decay time prior to movement of fuel for the FHA analysis is 24 hours. Decay heat-up calculations performed prior to the refueling outage, as part of the Integrated Decay Heat Management (IDHM) Program, ensure that planned spent fuel transfer to the SFP will not result in maximum SFP temperature exceeding the design basis limit of 149 °F (with both heat exchangers available) or 180 °F (with one heat exchanger alternating between the two pools). As stated above, the changes in radionuclide makeup and additional heat load do not impact any safety settings and do not cause any safety limit to not be met. In addition, the integrity of the Spent Fuel Pool is maintained.

The time frame in which the fuel assemblies are moved has been evaluated against the 10 CFR 50.67 dose limits for members of the public, licensee personnel and control room. Additionally, the guidance provided in [Regulatory] Guide 1.183 was used. Calculations performed conclude that expected dose limits following a Fuel [H]andling Accident are met with the proposed decay time prior to commencing fuel movement.

Therefore, the proposed changes do not involve a significant reduction in a margin of safety.

The NRC staff has reviewed the licensee's analysis and, based on this review, with changes in the areas noted above, it appears that the three standards of 10 CFR 50.92(c) are satisfied. Therefore, the NRC staff proposes to determine that the amendment request involves no significant hazards consideration.

Attorney for licensee: Jeffrie J. Keenan, Esquire, Nuclear Business Unit—N21, P.O. Box 236, Hancocks Bridge, NJ 08038.

NRC Branch Chief: Harold K. Chernoff.

Previously Published Notices of Consideration of Issuance of Amendments to Facility Operating Licenses, Proposed No Significant Hazards Consideration Determination, and Opportunity for a Hearing

The following notices were previously published as separate individual notices. The notice content was the same as above. They were published as individual notices either because time did not allow the Commission to wait for this biweekly notice or because the action involved exigent circumstances. They are repeated here because the biweekly notice lists all amendments issued or proposed to be issued involving no significant hazards consideration.

For details, see the individual notice in the **Federal Register** on the day and page cited. This notice does not extend the notice period of the original notice.

Exelon Generation Company, LLC, Docket Nos. 50–352 and 50–353, Limerick Generating Station, Units 1 and 2, Montgomery County, Pennsylvania

Date of amendment request: August 24, 2007, supplemented by letter dated June 11, 2008.

Description of amendment request: The proposed amendment would increase the required minimum volume of fuel oil in the emergency diesel generator (EDG) day tanks from 200 gallons to 250 gallons, enough for 1 hour of continuous operation of the associated EDG at rated load. This change is necessitated by a revision to the Limerick Generating Station design analysis of EDG fuel consumption that accounts for parameters not considered in the original analysis, including the use of ultra-low sulphur diesel fuel oil.

Date of publication of individual notice in ***Federal Register:*** June 20, 2008 (73 FR 35168).

Expiration date of individual notice: July 20, 2008 (Public comment) and August 19, 2008 (Hearing requests).

FirstEnergy Nuclear Operating Company, Docket No. 50–346, Davis-Besse Nuclear Power Station, Unit No. 1, Ottawa County, Ohio

Date of amendment request: August 3, 2007.

Brief description of amendment request: The proposed amendment would represent a full conversion from the current technical specifications to a set of improved technical specifications based on NUREG–1430, ''Standard Technical Specifications Babcock and Wilcox Plants,'' Revision 3.1 dated December 2005 and certain generic changes to the NUREG.

Date of publication of individual notice in ***Federal Register:*** May 22, 2008.

Expiration date of individual notice: July 22, 2008.

Notice of Issuance of Amendments to Facility Operating Licenses

During the period since publication of the last biweekly notice, the Commission has issued the following amendments. The Commission has determined for each of these amendments that the application complies with the standards and requirements of the Atomic Energy Act of 1954, as amended (the Act), and the Commission's rules and regulations. The Commission has made appropriate findings as required by the Act and the Commission's rules and regulations in 10 CFR Chapter I, which are set forth in the license amendment.

Notice of Consideration of Issuance of Amendment to Facility Operating License, Proposed No Significant Hazards Consideration Determination, and Opportunity for A Hearing in connection with these actions was published in the **Federal Register** as indicated.

Unless otherwise indicated, the Commission has determined that these amendments satisfy the criteria for categorical exclusion in accordance with 10 CFR 51.22. Therefore, pursuant to 10 CFR 51.22(b), no environmental impact statement or environmental assessment need be prepared for these amendments. If the Commission has prepared an environmental assessment under the special circumstances provision in 10 CFR 51.22(b) and has made a determination based on that assessment, it is so indicated.

For further details with respect to the action see (1) the applications for amendment, (2) the amendment, and (3) the Commission's related letter, Safety Evaluation and/or Environmental Assessment as indicated. All of these items are available for public inspection at the Commission's Public Document Room (PDR), located at One White Flint North, Public File Area 01F21, 11555 Rockville Pike (first floor), Rockville, Maryland. Publicly available records will be accessible from the Agencywide Documents Access and Management Systems (ADAMS) Public Electronic Reading Room on the Internet at the NRC Web site, *http://www.nrc.gov/reading-rm/adams.html*. If you do not have access to ADAMS or if there are problems in accessing the documents located in ADAMS, contact the PDR Reference staff at 1 (800) 397–4209, (301) 415–4737 or by e-mail to *pdr@nrc.gov*.

Detroit Edison Company, Docket No. 50–341, Fermi 2, Monroe County, Michigan

Date of application for amendment: January 15, 2008.

Brief description of amendment: The amendment revises the Technical Specifications (TS) Surveillance Requirement frequency in TS 3.1.3, ''Control Rod OPERABILITY'' from ''7 days after the control rod is withdrawn and THERMAL POWER is greater than the [Low Power Setpoint] LPSP of [Rod Worth Minimizer] RWM'' to ''31 days after the control rod is withdrawn and THERMAL POWER is greater than the LPSP of the RWM'' and revises Example 1.4–3 in section 1.4 ''Frequency'' to clarify the applicability of the 1.25 surveillance test interval extension.

Date of issuance: June 23, 2008.

Effective date: As of the date of issuance and shall be implemented within 60 days.

Amendment No.: 179.

Facility Operating License No. NPF–43: Amendment revised the Technical Specifications and License.

Date of initial notice in ***Federal Register:*** February 26, 2008 (73 FR 10296) The Commission's related evaluation of the amendment is contained in a Safety Evaluation dated June 23, 2008.

No significant hazards consideration comments received: No.

Detroit Edison Company, Docket No. 50–341, Fermi 2, Monroe County, Michigan

Date of application for amendment: July 12, 2007, as supplemented by letter dated September 21, 2007.

Brief description of amendment: The amendment revises Surveillance Requirement 3.3.3.1.2 in Technical Specification 3.3.3.1, ''Post Accident Monitoring (PAM) Instrumentation.'' Specifically, the amendment deletes the note which excludes radiation detectors from calibration requirements.

Date of issuance: June 25, 2008.

Effective date: As of the date of issuance and shall be implemented within 60 days.

Amendment No.: 180.

Facility Operating License No. NPF–43: Amendment revised the Technical Specifications and License.

Date of initial notice in ***Federal Register:*** November 6, 2007 (72 FR 62687) The supplemental letter was considered, along with the application, in the **Federal Register** notice of the staff's proposed no significant hazards consideration determination.

The Commission's related evaluation of the amendment is contained in a Safety Evaluation dated June 25, 2008.

No significant hazards consideration comments received: No.

Entergy Nuclear Vermont Yankee, LLC and Entergy Nuclear Operations, Inc., Docket No. 50–271, Vermont Yankee Nuclear Power Station, Vernon, Vermont

Date of application for amendment: October 18, 2007.

Brief description of amendment: The amendment revised the Technical Specifications applicability requirements related to primary containment oxygen concentration and drywell-to-suppression chamber differential pressure limits. The associated actions would also be revised to be consistent with exiting the applicability for each specification.

Date of Issuance: June 23, 2008.

Effective date: As of the date of issuance, and shall be implemented within 60 days.

Amendment No.: 232.

Facility Operating License No. DPR–28: Amendment revised the License and Technical Specifications.

Date of initial notice in ***Federal Register:*** December 18, 2007 (72 FR 71712).

The Commission's related evaluation of this amendment is contained in a Safety Evaluation dated June 23, 2008.

No significant hazards consideration comments received: No.

Exelon Generation Company, LLC, Docket Nos. STN 50–456 and STN 50–457, Braidwood Station (Braidwood), Units 1 and 2, Will County, Illinois

Docket Nos. STN 50–454 and STN 50–455, Byron Station (Byron), Unit Nos. 1 and 2, Ogle County, Illinois.

Date of application for amendment: July 31, 2007.

Brief description of amendment: The amendments revise Technical Specification 5.5.2, ''Primary Coolant Sources Outside Containment,'' to clarify the intent of refueling cycle intervals (i.e., 18 month intervals) with respect to system integrated leak test requirements and to add a statement that the provisions of Surveillance Requirement 3.0.2 are applicable.

Date of issuance: June 18, 2008.

Effective date: As of the date of issuance and shall be implemented within 30 days.

Amendment Nos.: Braidwood Unit 1—151; Braidwood Unit 2–151; Byron Unit No. 1–155; and Byron Unit No. 2–155.

Facility Operating License Nos. NPF–72, NPF–77, NPF–37, and NPF–66: The amendment revised the Technical Specifications and Licenses.

Date of initial notice in ***Federal Register:*** September 11, 2007 (72 FR 51859).

The Commission's related evaluation of the amendments is contained in a Safety Evaluation dated June 18, 2008.

No significant hazards consideration comments received: No.

FirstEnergy Nuclear Operating Company, et al., Docket No. 50–346, Davis-Besse Nuclear Power Station, Unit No. 1, Ottawa County, Ohio

Date of application for amendment: April 12, 2007, as supplemented on September 18, October 8, and October 19, 2007, January 15 (2 letters), February 14, February 20, March 12, and May 16, 2008.

Brief description of amendment: This amendment increases the Rated Thermal Power by approximately 1.63 percent to 2817 megawatts thermal. This increase will be achieved by the use of a Caldon Leading Edge Flowmeter CheckPlus™ ultrasonic flow measurement system, which allows for more accurate measurement of feedwater flow.

Date of issuance: June 30, 2008.

Effective date: As of the date of issuance and shall be implemented within 120 days.

Amendment No.: 278.

Facility Operating License No. NPF–3: Amendment revised the Technical Specifications and License.

Date of initial notice in ***Federal Register:*** September 11, 2007 (72 FR 51861). The supplements dated September 18, October 8, and October 19, 2007, January 15 (2 letters), February 14, February 20, March 12, and May 16, 2008, contained clarifying information and did not change the NRC staff's initial proposed finding of no significant hazards consideration. The Commission's related evaluation of the amendment is contained in a Safety Evaluation dated June 30, 2008.

No significant hazards consideration comments received: No.

FirstEnergy Nuclear Operating Company, et al., Docket No. 50–440, Perry Nuclear Power Plant, Unit No. 1, Lake County, Ohio

Date of application for amendment: September 5, 2007 (Agencywide Document and Management System (ADAMS) Accession No. ML072550547).

Brief description of amendment: The proposed amendment would revise Technical Specifications (TSs) 3.6.1, 3.6.4, and 3.6.5 to relax the position verification requirements for primary containments isolation devices, secondary containment isolation

devices, and drywell isolation devices that are locked, sealed, or otherwise secured. These changes are based on TS Task Force (TSTF) change traveler TSTF–45, Revision 2, and TSTF–269, Revision 2, which have been approved generically for the Boiling-Water Reactor (BWR) Standard Technical Specifications, NUREG–1434 (BWR/6).

Date of issuance: June 19, 2008.

Effective date: As of the date of issuance and shall be implemented within 120 days.

Amendment No.: 149.

Facility Operating License No. NPF–58: This amendment revised the Technical Specifications and License.

Date of initial notice in ***Federal Register:*** January 29, 2008 (73 FR 5221).

The Commission's related evaluation of the amendment is contained in a Safety Evaluation dated June 19, 2008.

No significant hazards consideration comments received: No.

FPL Energy Duane Arnold, LLC, Docket No. 50–331, Duane Arnold Energy Center, Linn County, Iowa

Date of application for amendment: June 29, 2007.

Brief description of amendment: This amendment changes Technical Specifications (TS) sections 3.7.4 and 5.5.13, to strengthen TS requirements regarding control room envelope (CRE) habitability by changing the action and surveillance requirements associated with the limiting condition for operation operability requirements for the CRE emergency ventilation system, and by adding a new TS administrative controls program on CRE habitability. The proposed revision to the TS and associated Bases is consistent with Standard Technical Specifications (STS) as revised by STS change traveler TS Task Force (TSTF)–448, Revision 3, ''Control Room Envelope Habitability.'' The plant-specific name for the CRE at Duane Arnold Energy Center is Control Building Envelope, as expressed in its application for amendment.

Date of issuance: June 24, 2008.

Effective date: As of the date of issuance and shall be implemented within 180 days.

Amendment No.: 269.

Facility Operating License No. DPR–49: The amendment revised the Technical Specifications and Facility Operating License.

Date of initial notice in ***Federal Register:*** September 25, 2007 (72 FR 54474).

The Commission's related evaluation of the amendment is contained in a Safety Evaluation dated June 24, 2008.

No significant hazards consideration comments received: No.

Luminant Generation Company LLC, Docket Nos. 50–445 and 50–446, Comanche Peak Steam Electric Station, Unit Nos. 1 and 2, Somervell County, Texas

Date of amendment request: August 28, 2007, as supplemented by letters dated October 24, November 7, and December 3, 2007, January 10, 29, and 31, February 21, 26, and 28, March 6, April 17, and May 14, 2008.

Brief description of amendments: The amendments revised the operating license and Technical Specification (TS) 1.0, ''Use and Application,'' to revise the rated thermal power from 3458 megawatts thermal (MWt) to 3612 MWt.

Date of issuance: June 27, 2008.

Effective date: As of the date of issuance and shall be implemented within 180 days from the date of issuance.

Amendment Nos.: Unit 1—146; Unit 2—146.

Facility Operating License Nos. NPF–87 and NPF–89: The amendments revised the Facility Operating Licenses and Technical Specifications.

Date of initial notice in ***Federal Register:*** October 23, 2007 (72 FR 60034). The supplements dated October 24, November 7, and December 3, 2007, January 10, 29, and 31, February 21, 26, and 28, March 6, April 17, and May 14, 2008, provided additional information that clarified the application, did not expand the scope of the application as originally noticed, and did not change the staff's original proposed no significant hazards consideration determination as published in the **Federal Register** on October 23, 2007 (72 FR 60034).

The Commission's related evaluation of the amendments is contained in a Safety Evaluation dated June 27, 2008.

No significant hazards consideration comments received: No.

Nebraska Public Power District, Docket No. 50–298, Cooper Nuclear Station, Nemaha County, Nebraska

Date of amendment request: November 19, 2007, as supplemented by letters dated March 6, March 12, April 4, and May 9, 2008.

Brief description of amendment: The amendment revises the license and Technical Specifications to reflect an increase in the rated thermal power from 2381 to 2419 megawatts thermal (1.62 percent increase).

Date of issuance: June 30, 2008.

Effective date: As of the date of issuance and shall be implemented within 90 days of issuance.

Amendment No.: 231.

Facility Operating License No. DPR–46: Amendment revised the Facility Operating License and Technical Specifications.

Date of initial notice in ***Federal Register:*** January 29, 2008 (73 FR 5224). The supplements dated March 6, March 12, April 4, and May 9, 2008, provided additional information that clarified the application, did not expand the scope of the application as originally noticed, and did not change the staff's original proposed no significant hazards consideration determination as published in the **Federal Register**.

The Commission's related evaluation of the amendment is contained in a Safety Evaluation dated June 30, 2008.

No significant hazards consideration comments received: No.

Nuclear Management Company, LLC, Docket Nos. 50–282 and 50–306, Prairie Island Nuclear Generating Plant, Units 1 and 2, Goodhue County, Minnesota

Date of application for amendments: July 3, 2007.

Brief description of amendments: The amendments revise TS 1.4, ''Frequency'' to modify the second paragraph of Example 1.4–1 to be consistent with the requirements of Surveillance Requirement (SR) 3.0.4 and incorporate the changes in Technical Specification Task Force (TSTF) industry traveler TSTF–485, ''Correct Example 1.4–1''; revise TS 5.5.7.a, to modify references to Section XI of the American Society of Mechanical Engineers (ASME) Code with references to the ASME Code for Operation and Maintenance of Nuclear Power Plants (ASME OM Code), to be consistent with TSTF–479, ''Changes to Reflect Revision of 10 CFR [Code of Federal Regulations] 50.55a''; revise TS 5.5.7.b, to restrict extension of Frequencies to those Frequencies specified as 2 years or less, and take exception to the limitation in SR 3.0.2 which does not apply the 1.25 times extension to Frequencies of 24 months, to be consistent with TSTF–479 and TSTF–497, ''Limit Inservice Testing Program SR 3.0.2 Application to Frequencies of 2 Years or Less''; and revise TS 5.5.7.d, to modify the referenced ASME Code to be consistent with TSTF–479.

Date of issuance: June 27, 2008.

Effective date: As of the date of issuance and shall be implemented within 90 days.

Amendment Nos.: 185, 175.

Facility Operating License Nos. DPR–42 and DPR–60: Amendments revised the Technical Specifications.

Date of initial notice in ***Federal Register:*** August 28, 2007 (72 FR 49579).

The Commission's related evaluation of the amendments is contained in a Safety Evaluation dated June 27, 2008.

No significant hazards consideration comments received: No.

Omaha Public Power District, Docket No. 50–285, Fort Calhoun Station, Unit No. 1, Washington County, Nebraska

Date of amendment request: May 16, 2007.

Brief description of amendment: The amendment revised Technical Specification requirements related to the control room envelope habitability in accordance with Technical Specification Task Force (TSTF) Traveler TSTF–448–A, Revision 3, ''Control Room Habitability.''

Date of issuance: June 30, 2008.

Effective date: As of the date of issuance and shall be implemented within 270 days of the date of issuance.

Amendment No.: 257.

Renewed Facility Operating License No. DPR–40: The amendment revised the Technical Specifications.

Date of initial notice in ***Federal Register:*** June 19, 2007 (72 FR 33784).

The Commission's related evaluation of the amendment is contained in a safety evaluation dated June 30, 2008.

No significant hazards consideration comments received: No.

Pacific Gas and Electric Company, Docket No. 50–133, Humboldt Bay Power Plant, Unit 3, Humboldt County, California (Tac No. J00337)

Date of application for amendment: November 5, 2007.

Brief description of amendment: The amendment eliminates the security plan requirements from the 10 CFR Part 50 licensed site after the spent nuclear fuel has been transferred to the 10 CFR Part 72 licensed Independent Spent Fuel Storage Installation (ISFSI).

Date of issuance: June 16, 2008.

Effective date: As of the date that the transfer of the last of the spent nuclear fuel to the ISFSI is complete and shall be implemented within 60 days after the transfer.

Amendment No.: 43.

Facility Operating License No. DPR–7: This amendment revises the License.

Date of initial notice in ***Federal Register:*** February 12, 2008 (73 FR 8071).

The Commission's related evaluation of the amendment is contained in a Safety Evaluation dated June 16, 2008.

No significant hazards consideration comments received: No.

Southern Nuclear Operating Company, Inc., Docket Nos. 50–348 and 50–364, Joseph M. Farley Nuclear Plant, Units 1 and 2, Houston County, Alabama

Date of amendment request: June 5, 2007.

Brief description of amendment request: The amendment revises the Joseph M. Farley Nuclear Plant, Units 1 and 2 Technical Specifications (TS) to add a new TS to address the operation of Engineered Safety Feature (ESF) Room Coolers required to support ESF TS equipment.

Date of issuance: June 27, 2008.

Effective date: As of the date of issuance and shall be implemented within 60 days from the date of issuance.

Amendment Nos.: Unit 1—176, Unit 2—169.

Renewed Facility Operating License Nos. NPF–2 and NPF–8: Amendment revised the Technical Specifications and Licenses.

Date of initial notice in ***Federal Register:*** September 25, 2007 (72 FR 54480).

The Commission's related evaluation of the amendments is contained in a Safety Evaluation dated June 27, 2008.

No significant hazards consideration comments received: No.

STP Nuclear Operating Company, Docket Nos. 50–498 and 50–499, South Texas Project, Units 1 and 2, Matagorda County, Texas

Date of amendment request: November 8, 2007.

Brief description of amendments: The amendments modified Technical Specifications (TS) surveillance requirements, related to battery testing, by revising TS 3/4.8.2.1, ''DC [Direct Current] Sources—Operating,'' TS 3/4.8.2.2, ''DC Sources—Shutdown,'' and TS 3/4.8.2.3, ''Battery Parameters.'' The changes allow battery testing to be performed during any MODE of operation.

Date of issuance: June 30, 2008.

Effective date: As of the date of issuance and shall be implemented within 60 days of issuance.

Amendment Nos.: Unit 1—184; Unit 2—171.

Facility Operating License Nos. NPF–76 and NPF–80: The amendments revised the Facility Operating Licenses and Technical Specifications.

Date of initial notice in ***Federal Register:*** February 12, 2008 (73 FR 8072).

The Commission's related evaluation of the amendments is contained in a Safety Evaluation dated June 30, 2008.

No significant hazards consideration comments received: No.

Tennessee Valley Authority, Docket No. 50 390, Watts Bar Nuclear Plant, Unit 1, Rhea County, Tennessee

Date of application for amendment: June 8, 2007, as supplemented on December 26, 2007, and March 31, 2008.

Brief description of amendment: The amendment revises several Technical Specification (TS) sections to allow relaxations of various Reactor Trip System/Engineered Safety Feature (RTS/ESF) logic completion times, bypass test times, allowable outage times, and surveillance testing intervals that were previously reviewed and approved by NRC under Westinghouse Reports WCAP–14333–P–A, ''Probabilistic Risk Analysis of RPS [reactor protection system] and ESFAS [ESF Actuation System] Test Times and Completion Times,'' and WCAP–15376–P–A, ''Risk-Informed Assessment of the RTS and ESFAS Surveillance Test Intervals and Reactor Trip Breaker Test and Completion Times.'' The amendment also incorporates TS Task Force (TSTF) Change Travelers TSTF–169, ''Deletion of Condition 3.3.1.N,'' and TSTF–311, ''Revision of Surveillance Frequency for TADOT [Trip Actuation Device Operational Test] on Turbine Trip Functional Unit.''

Date of issuance: June 30, 2008.

Effective date: As of the date of issuance and shall be implemented within 120 days of issuance.

Amendment No.: 68.

Facility Operating License No. NPF–90: Amendment revises the Technical Specifications and License.

Date of initial notice in ***Federal Register:*** July 31, 2007 (72 FR 41789). The December 26, 2007, and March 31, 2008, supplemental letters provided clarifying information that was within the scope of the initial notice and did not change the initial proposed no significant hazards consideration determination.

The Commission's related evaluation of the amendment is contained in a Safety Evaluation dated June 30, 2008.

No significant hazards consideration comments received: No.

Virginia Electric and Power Company, Docket No. 50–339, North Anna Power Station, Unit 2, Louisa County, Virginia

Date of application for amendment: December 5, 2007, as supplemented on March 14, April 3, and April 23, 2008.

Brief description of amendment: The amendment revised Technical Specification (TS) 5.5.15, pertaining to the containment leakage rate testing program. The TS change permitted a one-time 5-year exception to the 10-year frequency of the performance based

leakage rate testing program for Type A tests, as required by Regulatory Guide (RG) 1.163. This one time exception to the RG 1.163 requirement allows the next Type A test to be performed no later than October 9, 2014.

Date of issuance: June 30, 2008.

Effective date: As of the date of issuance and shall be implemented within 30 days from the date of issuance.

Amendment No.: 233.

Renewed Facility Operating License Nos. NPF–4 and NPF–7: Amendment changed the license and the technical specifications.

Date of initial notice in ***Federal Register:*** January 15, 2008 (73 FR 2550).

The supplements dated March 14, April 3, and April 23, 2008, provided additional information that clarified the application, did not expand the scope of the application as originally noticed, and did not change the staff's original proposed no significant hazards consideration determination. The Commission's related evaluation of the amendments is contained in a Safety Evaluation dated June 30, 2008.

No significant hazards consideration comments received: No.

Notice of Issuance of Amendment to Facility Operating License and Final No Significant Hazards Consideration Determination

During the period since publication of the last biweekly notice, individual notices of issuance of amendments have been issued for the facilities as listed below. These notices were previously published as separate individual notices. They are repeated here because this biweekly notice lists all amendments that have been issued for which the Commission has made a final determination that an amendment involves no significant hazards consideration.

In this case, a prior Notice of Consideration of Issuance of Amendment, Proposed No Significant Hazards Consideration Determination, and Opportunity for a Hearing was issued, a hearing was requested, and the amendment was issued before any hearing because the Commission made a final determination that the amendment involves no significant hazards consideration.

Details are contained in the individual notice as cited.

Carolina Power & Light Company, Docket No. 50–261, H. B. Robinson Steam Electric Plant, Unit No. 2, Darlington County, South Carolina

Date of application for amendment: November 19, 2007, as supplemented by letter dated February 4, 2008.

Brief description of amendment: The amendment makes administrative revisions to various Operating License (OL) and Technical Specifications (TS) sections. Specifically, the amendment changes OL Section 3.G (1) (secondary water chemistry program requirements), OL Section 3.G (2) (leakage reduction program requirements), TS Section 1.1 (Definitions), TS Section 3.1.7 (Rod Position Indication), TS Section 3.4.3 (RCS Pressure and Temperature (P/T) Limits), TS Section 3.4.9 (Pressurizer), TS Section 3.7.4 (Auxiliary Feedwater (AFW) System), TS Section 5.5.12 (Explosive Gas and Storage Tank Radioactivity Monitoring Program), and TS Section 5.6.6 (Post Accident Monitoring (PAM) Instrumentation Report). The changes are administrative in nature and improve the accuracy and clarity of the TSs and OL without resulting in changes to the plant design or the procedural controls for the operation, surveillance, or maintenance of the plant.

Date of issuance: June 19, 2008.

Effective date: Effective as of the date of issuance and shall be implemented within 30 days.

Amendment No.: 218.

Renewed Facility Operating License No. DPR–23: The amendment revises the Technical Specifications and Facility Operating License.

Date of initial notice in ***Federal Register:*** December 31, 2007.

Public comments requested as to proposed no significant hazards consideration (NSHC): No.

The Commission's related evaluation of the amendment is contained in a safety evaluation dated June 19, 2008.

Attorney for licensee: David T. Conley, Associate General Counsel II—Legal Department, Progress Energy Service Company, LLC, Post Office Box 1551, Raleigh, North Carolina 27602–1551.

NRC Branch Chief: Thomas H. Boyce.

Notice of Issuance of Amendments to Facility Operating Licenses and Final Determination of No Significant Hazards Consideration and Opportunity for a Hearing (Exigent Public Announcement or Emergency Circumstances)

During the period since publication of the last biweekly notice, the Commission has issued the following amendments. The Commission has determined for each of these amendments that the application for the amendment complies with the standards and requirements of the Atomic Energy Act of 1954, as amended (the Act), and the Commission's rules and regulations. The Commission has made appropriate findings as required by the Act and the Commission's rules and regulations in 10 CFR Chapter I, which are set forth in the license amendment.

Because of exigent or emergency circumstances associated with the date the amendment was needed, there was not time for the Commission to publish, for public comment before issuance, its usual Notice of Consideration of Issuance of Amendment, Proposed No Significant Hazards Consideration Determination, and Opportunity for a Hearing.

For exigent circumstances, the Commission has either issued a **Federal Register** notice providing opportunity for public comment or has used local media to provide notice to the public in the area surrounding a licensee's facility of the licensee's application and of the Commission's proposed determination of no significant hazards consideration. The Commission has provided a reasonable opportunity for the public to comment, using its best efforts to make available to the public means of communication for the public to respond quickly, and in the case of telephone comments, the comments have been recorded or transcribed as appropriate and the licensee has been informed of the public comments.

In circumstances where failure to act in a timely way would have resulted, for example, in derating or shutdown of a nuclear power plant or in prevention of either resumption of operation or of increase in power output up to the plant's licensed power level, the Commission may not have had an opportunity to provide for public comment on its no significant hazards consideration determination. In such case, the license amendment has been issued without opportunity for comment. If there has been some time for public comment but less than 30 days, the Commission may provide an opportunity for public comment. If comments have been requested, it is so stated. In either event, the State has been consulted by telephone whenever possible.

Under its regulations, the Commission may issue and make an amendment immediately effective, notwithstanding the pendency before it of a request for a hearing from any person, in advance of the holding and completion of any

required hearing, where it has determined that no significant hazards consideration is involved.

The Commission has applied the standards of 10 CFR 50.92 and has made a final determination that the amendment involves no significant hazards consideration. The basis for this determination is contained in the documents related to this action. Accordingly, the amendments have been issued and made effective as indicated.

Unless otherwise indicated, the Commission has determined that these amendments satisfy the criteria for categorical exclusion in accordance with 10 CFR 51.22. Therefore, pursuant to 10 CFR 51.22(b), no environmental impact statement or environmental assessment need be prepared for these amendments. If the Commission has prepared an environmental assessment under the special circumstances provision in 10 CFR 51.12(b) and has made a determination based on that assessment, it is so indicated.

For further details with respect to the action, see (1) the application for amendment, (2) the amendment to Facility Operating License, and (3) the Commission's related letter, Safety Evaluation and/or Environmental Assessment, as indicated. All of these items are available for public inspection at the Commission's Public Document Room (PDR), located at One White Flint North, Public File Area 01F21, 11555 Rockville Pike (first floor), Rockville, Maryland. Publicly available records will be accessible from the Agencywide Documents Access and Management System's (ADAMS) Public Electronic Reading Room on the Internet at the NRC Web site, *http://www.nrc.gov/reading-rm/adams.html*. If you do not have access to ADAMS or if there are problems in accessing the documents located in ADAMS, contact the PDR Reference staff at 1 (800) 397–4209, (301) 415–4737 or by e-mail to *pdr@nrc.gov*.

The Commission is also offering an opportunity for a hearing with respect to the issuance of the amendment. Within 60 days after the date of publication of this notice, person(s) may file a request for a hearing with respect to issuance of the amendment to the subject facility operating license and any person whose interest may be affected by this proceeding and who wishes to participate as a party in the proceeding must file a written request via electronic submission through the NRC E-Filing system for a hearing and a petition for leave to intervene. Requests for a hearing and a petition for leave to intervene shall be filed in accordance with the Commission's ''Rules of Practice for Domestic Licensing Proceedings'' in 10 CFR Part 2. Interested person(s) should consult a current copy of 10 CFR 2.309, which is available at the Commission's PDR, located at One White Flint North, Public File Area 01F21, 11555 Rockville Pike (first floor), Rockville, Maryland, and electronically on the Internet at the NRC Web site, *http://www.nrc.gov/reading-rm/doc-collections/cfr/*. If there are problems in accessing the document, contact the PDR Reference staff at 1 (800) 397–4209, (301) 415–4737, or by e-mail to *pdr@nrc.gov*. If a request for a hearing or petition for leave to intervene is filed by the above date, the Commission or a presiding officer designated by the Commission or by the Chief Administrative Judge of the Atomic Safety and Licensing Board Panel, will rule on the request and/or petition; and the Secretary or the Chief Administrative Judge of the Atomic Safety and Licensing Board will issue a notice of a hearing or an appropriate order.

As required by 10 CFR 2.309, a petition for leave to intervene shall set forth with particularity the interest of the petitioner in the proceeding, and how that interest may be affected by the results of the proceeding. The petition should specifically explain the reasons why intervention should be permitted with particular reference to the following general requirements: (1) The name, address, and telephone number of the requestor or petitioner; (2) the nature of the requestor's/petitioner's right under the Act to be made a party to the proceeding; (3) the nature and extent of the requestor's/petitioner's property, financial, or other interest in the proceeding; and (4) the possible effect of any decision or order which may be entered in the proceeding on the requestor's/petitioner's interest. The petition must also identify the specific contentions which the petitioner/requestor seeks to have litigated at the proceeding.

Each contention must consist of a specific statement of the issue of law or fact to be raised or controverted. In addition, the petitioner/requestor shall provide a brief explanation of the bases for the contention and a concise statement of the alleged facts or expert opinion which support the contention and on which the petitioner intends to rely in proving the contention at the hearing. The petitioner must also provide references to those specific sources and documents of which the petitioner is aware and on which the petitioner intends to rely to establish those facts or expert opinion. The petition must include sufficient information to show that a genuine dispute exists with the applicant on a material issue of law or fact.[1] Contentions shall be limited to matters within the scope of the amendment under consideration. The contention must be one which, if proven, would entitle the petitioner to relief. A petitioner/requestor who fails to satisfy these requirements with respect to at least one contention will not be permitted to participate as a party.

Each contention shall be given a separate numeric or alpha designation within one of the following groups:

1. *Technical*—primarily concerns/issues relating to technical and/or health and safety matters discussed or referenced in the applications.

2. *Environmental*—primarily concerns/issues relating to matters discussed or referenced in the environmental analysis for the applications.

3. *Miscellaneous*—does not fall into one of the categories outlined above.

As specified in 10 CFR 2.309, if two or more petitioners/requestors seek to co-sponsor a contention, the petitioners/requestors shall jointly designate a representative who shall have the authority to act for the petitioners/requestors with respect to that contention. If a petitioner/requestor seeks to adopt the contention of another sponsoring petitioner/requestor, the petitioner/requestor who seeks to adopt the contention must either agree that the sponsoring petitioner/requestor shall act as the representative with respect to that contention, or jointly designate with the sponsoring petitioner/requestor a representative who shall have the authority to act for the petitioners/requestors with respect to that contention.

Those permitted to intervene become parties to the proceeding, subject to any limitations in the order granting leave to intervene, and have the opportunity to participate fully in the conduct of the hearing. Since the Commission has made a final determination that the amendment involves no significant hazards consideration, if a hearing is requested, it will not stay the effectiveness of the amendment. Any hearing held would take place while the amendment is in effect.

A request for hearing or a petition for leave to intervene must be filed in

[1] To the extent that the applications contain attachments and supporting documents that are not publicly available because they are asserted to contain safeguards or proprietary information, petitioners desiring access to this information should contact the applicant or applicant's counsel and discuss the need for a protective order.

accordance with the NRC E-Filing rule, which the NRC promulgated in August 28, 2007 (72 FR 49139). The E-Filing process requires participants to submit and serve documents over the Internet or in some cases to mail copies on electronic storage media. Participants may not submit paper copies of their filings unless they seek a waiver in accordance with the procedures described below.

To comply with the procedural requirements of E-Filing, at least five (5) days prior to the filing deadline, the petitioner/requestor must contact the Office of the Secretary by e-mail at *HEARINGDOCKET@NRC.GOV*, or by calling (301) 415–1677, to request (1) a digital ID certificate, which allows the participant (or its counsel or representative) to digitally sign documents and access the E-Submittal server for any proceeding in which it is participating; and/or (2) creation of an electronic docket for the proceeding (even in instances in which the petitioner/requestor (or its counsel or representative) already holds an NRC-issued digital ID certificate). Each petitioner/requestor will need to download the Workplace Forms Viewer™ to access the Electronic Information Exchange (EIE), a component of the E-Filing system. The Workplace Forms Viewer™ is free and is available at *http://www.nrc.gov/site-help/e-submittals/install-viewer.html*. Information about applying for a digital ID certificate is available on NRC's public Web site at *http://www.nrc.gov/site-help/e-submittals/apply-certificates.html*.

Once a petitioner/requestor has obtained a digital ID certificate, had a docket created, and downloaded the EIE viewer, it can then submit a request for hearing or petition for leave to intervene. Submissions should be in Portable Document Format (PDF) in accordance with NRC guidance available on the NRC public Web site at *http://www.nrc.gov/site-help/e-submittals.html*. A filing is considered complete at the time the filer submits its documents through EIE. To be timely, an electronic filing must be submitted to the EIE system no later than 11:59 p.m. Eastern Time on the due date. Upon receipt of a transmission, the E-Filing system time-stamps the document and sends the submitter an e-mail notice confirming receipt of the document. The EIE system also distributes an e-mail notice that provides access to the document to the NRC Office of the General Counsel and any others who have advised the Office of the Secretary that they wish to participate in the proceeding, so that the filer need not serve the documents on those participants separately. Therefore, applicants and other participants (or their counsel or representative) must apply for and receive a digital ID certificate before a hearing request/petition to intervene is filed so that they can obtain access to the document via the E-Filing system.

A person filing electronically may seek assistance through the ''Contact Us'' link located on the NRC Web site at *http://www.nrc.gov/site-help/e-submittals.html* or by calling the NRC technical help line, which is available between 8:30 a.m. and 4:15 p.m., Eastern Time, Monday through Friday. The help line number is (800) 397–4209 or locally, (301) 415–4737.

Participants who believe that they have a good cause for not submitting documents electronically must file a motion, in accordance with 10 CFR 2.302(g), with their initial paper filing requesting authorization to continue to submit documents in paper format. Such filings must be submitted by: (1) First class mail addressed to the Office of the Secretary of the Commission, U.S. Nuclear Regulatory Commission, Washington, DC 20555–0001, Attention: Rulemaking and Adjudications Staff; or (2) courier, express mail, or expedited delivery service to the Office of the Secretary, Sixteenth Floor, One White Flint North, 11555 Rockville Pike, Rockville, Maryland 20852, Attention: Rulemaking and Adjudications Staff. Participants filing a document in this manner are responsible for serving the document on all other participants. Filing is considered complete by first-class mail as of the time of deposit in the mail, or by courier, express mail, or expedited delivery service upon depositing the document with the provider of the service.

Non-timely requests and/or petitions and contentions will not be entertained absent a determination by the Commission, the presiding officer, or the Atomic Safety and Licensing Board that the petition and/or request should be granted and/or the contentions should be admitted, based on a balancing of the factors specified in 10 CFR 2.309(c)(1)(i)–(viii). To be timely, filings must be submitted no later than 11:59 p.m. Eastern Time on the due date.

Documents submitted in adjudicatory proceedings will appear in NRC's electronic hearing docket which is available to the public at *http://ehd.nrc.gov/EHD_Proceeding/home.asp*, unless excluded pursuant to an order of the Commission, an Atomic Safety and Licensing Board, or a Presiding Officer. Participants are requested not to include personal privacy information, such as social security numbers, home addresses, or home phone numbers in their filings. With respect to copyrighted works, except for limited excerpts that serve the purpose of the adjudicatory filings and would constitute a Fair Use application, participants are requested not to include copyrighted materials in their submission.

Southern Nuclear Operating Company, Inc., Docket No. 50–425, Vogtle Electric Generating Plant, Unit 2, Burke County, Georgia

Date of amendment request: June 24, 2008, as supplemented by letter dated June 25, 2008.

Description of amendment request: The amendment revises Limiting Condition for Operation (LCO) 3.6.6, ''Containment Spray and Cooling Systems,'' Action A Completion Time, from 72 hours to a one-time 7 day Completion Time to allow repair on the VEGP Unit 2 Containment Spray Pump B.

Date of issuance: June 25, 2008.

Effective date: June 25, 2008, and shall be implemented on June 25, 2008.

Amendment No.: 131.

Facility Operating License No. (NPF–81): Amendment revised the technical specifications and license.

Public comments requested as to proposed no significant hazards consideration (NSHC): No.

The Commission's related evaluation of the amendment, finding of emergency circumstances, state consultation, and final NSHC determination are contained in a safety evaluation dated June 25, 2008.

Attorney for licensee: Arthur H. Domby, Esquire, Troutman Sanders, Nations Bank Plaza, 600 Peachtree Street, NE., Suite 5200, Atlanta, GA 30308–2216.

NRC Acting Branch Chief: John F. Stang, Acting.

Dated at Rockville, Maryland, this 3rd day July 2008.

For the Nuclear Regulatory Commission.

Timothy J. McGinty,

Acting Director, Division of Operating Reactor Licensing, Office of Nuclear Reactor Regulation.

[FR Doc. E8–15684 Filed 7–14–08; 8:45 am]

BILLING CODE 7590–01–P

NUCLEAR REGULATORY COMMISSION

Sunshine Federal Register Notice

AGENCY HOLDING THE MEETINGS: Nuclear Regulatory Commission.

DATES: Weeks of July 14, 21, 28, August 4, 11, 18, 2008.

PLACE: Commissioners' Conference Room, 11555 Rockville Pike, Rockville, Maryland.

STATUS: Public and Closed.

Week of July 14, 2008

Thursday, July 17, 2008

2 p.m.
Briefing on Fire Protection Issues (Public Meeting) (Contact: Alex Klein, 301–415–2822).

This meeting will be Webcast live at the Web address—*http://www.nrc.gov.*

Week of July 21, 2008—Tentative

Wednesday, July 23, 2008

1:25 p.m.
Affirmation Session (Public Meeting) (Tentative)
a. Progress Energy Carolinas Inc. (Shearon Harris Nuclear Power Plant, Units 2 and 3)—Motion by the North Carolina Waste Awareness and Reduction Network (NC WARN) to Immediately Suspend the Hearing Notice and Request for Expedited Consideration (Tentative).

1:30 p.m.
Discussion of Security Issues (Closed—Ex. 1 & 3).

Thursday, July 24, 2008

1:30 p.m.
Discussion of Security Issues (Closed—Ex. 1 & 3).

Week of July 28, 2008—Tentative

There are no meetings scheduled for the week of July 28, 2008.

Week of August 4, 2008—Tentative

There are no meetings scheduled for the week of August 4, 2008.

Week of August 11, 2008—Tentative

Tuesday, August 12, 2008

1:30 p.m.
Meeting with FEMA and State and Local Representatives on Offsite Emergency Preparedness Issues (Public Meeting) (New Contact: Lisa Gibney, 301–415–8376).

This meeting will be Webcast live at the Web address—*http://www.nrc.gov.*

Thursday, August 14, 2008

1:30 p.m.
Meeting with Organization of Agreement States (OAS) and Conference of Radiation Control Program Directors (CRCPD) (Public Meeting) (Contact: Andrea Jones, 301–415–2309).

This meeting will be Webcast live at the Web address—*http://www.nrc.gov.*

Week of August 18, 2008—Tentative

There are no meetings scheduled for the week of August 18, 2008.

* The schedule for Commission meetings is subject to change on short notice. To verify the status of meetings, call (recording)—(301) 415–1292. Contact person for more information: Michelle Schroll, (301) 415–1662.

Additional Information

The Briefing on Fire Protection Issues previously scheduled on Thursday, July 17, 2008, at 1 p.m. is now scheduled to begin at 2 p.m. on the same day.

The NRC Commission Meeting Schedule can be found on the Internet at: *http://www.nrc.gov/about-nrc/policy-making/schedule.html.*

The NRC provides reasonable accommodation to individuals with disabilities where appropriate. If you need a reasonable accommodation to participate in these public meetings, or need this meeting notice or the transcript or other information from the public meetings in another format (e.g. braille, large print), please notify the NRC's Disability Program Coordinator, Rohn Brown, at 301–492–2279, TDD: 301–415–2100, or by e-mail at *REB3@nrc.gov.* Determinations on requests for reasonable accommodation will be made on a case-by-case basis.

This notice is distributed by mail to several hundred subscribers; if you no longer wish to receive it, or would like to be added to the distribution, please contact the Office of the Secretary, Washington, DC 20555 (301–415–1969). In addition, distribution of this meeting notice over the Internet system is available. If you are interested in receiving this Commission meeting schedule electronically, please send an electronic message to *dkw@nrc.gov.*

Dated: July 10, 2008.

R. Michelle Schroll,

Office of the Secretary.

[FR Doc. 08–1434 Filed 7–11–08; 10:42 am]

BILLING CODE 7590–01–P

SECURITIES AND EXCHANGE COMMISSION

[Investment Company Act Release No. 28329; 812–13074]

ING Clarion Real Estate Income Fund, et al.; Notice of Application

July 8, 2008.

AGENCY: Securities and Exchange Commission (''Commission'').

ACTION: Notice of application under section 6(c) of the Investment Company Act of 1940 (''Act'') for an exemption from section 19(b) of the Act and rule 19b–1 under the Act.

Summary of Application: Applicants request an order to permit certain closed-end investment companies to make periodic distributions of long-term capital gains with respect to their outstanding common stock as frequently as twelve times each year, and as frequently as distributions are specified by or in accordance with the terms of any outstanding preferred stock that such investment companies may issue.

Applicants: ING Clarion Real Estate Income Fund (''IIA''), ING Clarion Global Real Estate Income Fund (''IGR''), and ING Clarion Real Estate Securities, L.P. (the ''Adviser'').

Filing Dates: March 26, 2004, February 1, 2007, June 12, 2008, and July 8, 2008.

Hearing or Notification of Hearing: An order granting the application will be issued unless the Commission orders a hearing. Interested persons may request a hearing by writing to the Commission's Secretary and serving applicants with a copy of the request, personally or by mail. Hearing requests should be received by the Commission by 5:30 p.m. on August 4, 2008, and should be accompanied by proof of service on applicants, in the form of an affidavit or, for lawyers, a certificate of service. Hearing requests should state the nature of the writer's interest, the reason for the request, and the issues contested. Persons who wish to be notified of a hearing may request notification by writing to the Commission's Secretary.

ADDRESSES: Secretary, Securities and Exchange Commission, 100 F Street, NE., Washington, DC 20549–1090; Applicants, 201 King of Prussia Road, Suite 600, Radnor, PA 19087, *Attention:* T. Ritson Ferguson.

FOR FURTHER INFORMATION CONTACT: Wendy Friedlander, Senior Counsel, at (202) 551–6837, or James M. Curtis, Branch Chief, at (202) 551–6825 (Division of Investment Management, Office of Chief Counsel).

SUPPLEMENTARY INFORMATION: The following is a summary of the application. The complete application may be obtained for a fee at the Commission's Public Reference Room, 100 F Street, NE., Washington 20549–1520 (telephone (202) 551–5850).

Applicants' Representations:

1. Each of IIA and IGR is a registered closed-end management investment company organized as a Delaware statutory trust, and each has high current income as its primary objective and capital appreciation as its

secondary objective.[1] The common shares issued by IIA and IGR are listed on the New York Stock Exchange, and the preferred shares issued by each are not listed on any exchange. Applicants believe that the shareholders of IIA and IGR are generally conservative, dividend-sensitive investors who desire current income periodically and may favor a fixed distribution policy.

2. The Adviser is registered under the Investment Advisers Act of 1940 and is responsible for the overall management of IIA and IGR. The Adviser is a subsidiary of ING Group, N.V., a financial services organization based in The Netherlands.

3. Applicants represent that on November 16, 2006, the Boards of Trustees (the ''Boards'') of each of IIA and IGR, including a majority of the members of each of the Boards who are not ''interested persons'' of each fund (the ''Independent Trustees'') as defined in section 2(a)(19) of the Act, reviewed information regarding the purpose and terms of a proposed distribution policy, the likely effects of such policy on the respective fund's long-term total return (in relation to market price and net asset value (''NAV'') per common share) and the relationship between the fund's distribution rate on its common shares under the policy and the fund's total return on NAV per share. Applicants state that the Independent Trustees of each of IIA and IGR also considered what conflicts of interest the Adviser and the affiliated persons of the Adviser and each fund might have with respect to the adoption or implementation of such policy. Applicants further state that after considering such information the Board, including the Independent Trustees, of each of IIA and IGR approved a distribution policy and related plan with respect to each of the respective fund's common shares (a ''Plan'') and determined that such policy and Plan are consistent with the relevant fund's investment objectives and in the best interests of such fund's common shareholders.

4. Applicants state that the purpose of each of the proposed Plans would be to permit each fund to distribute over the course of each year, through periodic distributions as nearly equal as practicable and any required special distributions, an amount closely approximating the total taxable income of the fund during such year and, if so determined by its Board, all or a portion of the returns of capital paid by portfolio companies to the fund during such year. Applicants represent that each of the funds would distribute to its respective common shareholders a fixed monthly percentage or amount under its proposed Plan, which percentage or amount may be adjusted from time to time. Applicants state that the minimum annual distribution rate with respect to a fund's common shares under each Plan would be independent of the fund's performance during any particular period but would be expected to correlate with the fund's performance over time. Applicants explain that each distribution on the common shares would be at the stated rate then in effect, except for extraordinary distributions and potential increases or decreases in the final dividend periods in light of the fund's performance for the entire calendar year and to enable the fund to comply with the distribution requirements of subchapter M of the Internal Revenue Code of 1986 (the ''Code'') for the calendar year. Applicants expect that over time the NAV distribution rate with respect to a fund's common shares will approximately equal that fund's total return on NAV.

5. Applicants state that at the November 16, 2006 meeting, the Boards of IIA and IGR each also adopted policies and procedures under rule 38a-1 under the Act that are reasonably designed to ensure that all notices sent to IIA or IGR shareholders with distributions under the Plan (''Notices'') comply with condition II below, and that all other written communications by IIA or IGR or its agents regarding distributions under the Plan include the disclosure required by condition III below. Applicants state that the Boards of IIA and IGR each also adopted policies and procedures at that meeting that require IIA and IGR to keep records that demonstrate each fund's compliance with all of the conditions of the requested order and that are necessary for each fund to form the basis for, or demonstrate the calculation of, the amounts disclosed in its Notices.

Applicants' Legal Analysis:

1. Section 19(b) generally makes it unlawful for any registered investment company to make long-term capital gains distributions more than once each year. Rule 19b–1 limits the number of capital gains dividends, as defined in section 852(b)(3)(C) of the Code (''distributions''), that a fund may make with respect to any one taxable year to one, plus a supplemental ''clean up'' distribution made pursuant to section 855 of the Code not exceeding 10% of the total amount distributed for the year, plus one additional capital gain dividend made in whole or in part to avoid the excise tax under section 4982 of the Code.

2. Section 6(c) provides that the Commission may, by order upon application, conditionally or unconditionally exempt any person, security, or transaction, or any class or classes of persons, securities or transactions, from any provision of the Act, if and to the extent that the exemption is necessary or appropriate in the public interest and consistent with the protection of investors and the purposes fairly intended by the policy and provisions of the Act.

3. Applicants state that one of the concerns underlying section 19(b) and rule 19b–1 is that shareholders might be unable to differentiate between regular distributions of capital gains and distributions of investment income. Applicants state, however, that rule 19a–1 effectively addresses this concern by requiring that a separate statement showing the sources of a distribution (*e.g.*, estimated net income, net short-term capital gains, net long-term capital gains and/or return of capital) accompany any distributions (or the confirmation of the reinvestment of distributions) estimated to be sourced in part from capital gains or capital. Applicants state that the same information also is included in IIA's and IGR's annual reports to shareholders and on its IRS Form 1099–DIV, which is sent to each common and preferred shareholder who received distributions during the year.

4. Applicants further state that each of IIA and IGR will make the additional disclosures required by the conditions set forth below, and each of them has adopted compliance policies and procedures in accordance with rule 38a–1 to ensure that all required Notices and disclosures are sent to shareholders. Applicants argue that by providing the information required by section 19(a) and rule 19a–1, and by complying with the procedures adopted under each Plan and the conditions listed below, the funds would ensure that each fund's shareholders are provided sufficient information to understand that their periodic distributions are not tied to the fund's net investment income (which for this purpose is the fund's taxable income other than from capital gains) and realized capital gains to date, and may not represent yield or investment

[1] Applicants request that any order issued granting the relief requested in the application also apply to any closed-end investment company (''fund'') that in the future: (a) Is advised by the Adviser (including any successor in interest) or by any entity controlling, controlled by, or under common control (within the meaning of section 2(a)(9) of the Act) with the Adviser; and (b) complies with the terms and conditions of the requested order. A successor in interest is limited to entities that result from a reorganization into another jurisdiction or a change in the type of business organization.

return. Applicants also state that compliance with each fund's compliance procedures and condition III set forth below will ensure that prospective shareholders and third parties are provided with the same information. Accordingly, applicants assert that continuing to subject the funds to section 19(b) and rule 19b–1 would afford shareholders no extra protection.

5. Applicants note that section 19(b) and rule 19b–1 also were intended to prevent certain improper sales practices, including, in particular, the practice of urging an investor to purchase shares of a fund on the basis of an upcoming capital gains dividend (''selling the dividend''), where the dividend would result in an immediate corresponding reduction in NAV and would be in effect a taxable return of the investor's capital. Applicants assert that the ''selling the dividend'' concern should not apply to closed-end investment companies, such as IIA and IGR, which do not continuously distribute shares. According to Applicants, if the underlying concern extends to secondary market purchases of shares of closed-end funds that are subject to a large upcoming capital gains dividend, adoption of a Plan actually helps minimize the concern by avoiding, through periodic distributions, any buildup of large end-of-the-year distributions.

6. Applicants also note that common shares of closed-end funds that invest primarily in equity securities often trade in the marketplace at a discount to their NAV. Applicants believe that this discount may be reduced for closed-end funds that pay relatively frequent dividends on their common shares at a consistent rate, whether or not those dividends contain an element of long-term capital gain.

7. Applicants assert that the application of rule 19b–1 to a Plan actually could have an undesirable influence on portfolio management decisions. Applicants state that, in the absence of an exemption from rule 19b–1, the implementation of a Plan imposes pressure on management (i) not to realize any net long-term capital gains until the point in the year that the fund can pay all of its remaining distributions in accordance with rule 19b–1, and (ii) not to realize any long-term capital gains during any particular year in excess of the amount of the aggregate pay-out for the year (since as a practical matter excess gains must be distributed and accordingly would not be available to satisfy pay-out requirements in following years), notwithstanding that purely investment considerations might favor realization of long-term gains at different times or in different amounts. Applicants thus assert that the limitation on the number of capital gain distributions that a fund may make with respect to any one year imposed by rule 19b–1, may prevent the efficient operation of a Plan whenever that fund's realized net long-term capital gains in any year exceed the total of the periodic distributions that may include such capital gains under the rule.

8. In addition, Applicants assert that rule 19b–1 may cause fixed regular periodic distributions under a Plan to be funded with returns of capital [2] (to the extent net investment income and realized short-term capital gains are insufficient to fund the distribution), even though realized net long-term capital gains otherwise could be available. To distribute all of a fund's long-term capital gains within the limits in rule 19b–1, a fund may be required to make total distributions in excess of the annual amount called for by its Plan, or to retain and pay taxes on the excess amount. Applicants thus assert that the requested order would minimize these effects of rule 19b–1 by enabling the funds to realize long-term capital gains as often as investment considerations dictate without fear of violating rule 19b–1.

9. Applicants state that *Revenue Ruling 89–81* under the Code requires that a fund that has both common stock and preferred stock outstanding designate the types of income, *e.g.*, investment income and capital gains, in the same proportion as the total distributions distributed to each class for the tax year. To satisfy the proportionate designation requirements of *Revenue Ruling 89–81,* whenever a fund has realized a long-term capital gain with respect to a given tax year, the fund must designate the required proportionate share of such capital gain to be included in common and preferred stock dividends. Applicants state that although rule 19b–1 allows a fund some flexibility with respect to the frequency of capital gains distributions, a fund might use all of the exceptions available under the rule for a tax year and still need to distribute additional capital gains allocated to the preferred stock to comply with *Revenue Ruling 89–81.*

10. Applicants assert that the potential abuses addressed by section 19(b) and rule 19b–1 do not arise with respect to preferred stock issued by a closed-end fund. Applicants assert that such distributions are fixed or determined in periodic auctions by reference to short-term interest rates rather than by reference to performance of the issuer and *Revenue Ruling 89–81* determines the proportion of such distributions that are comprised of the long-term capital gains.

11. Applicants also submit that the ''selling the dividend'' concern is not applicable to preferred stock, which entitles a holder to no more than a periodic dividend at a fixed rate or the rate determined by the market, and, like a debt security, is priced based upon its liquidation value, credit quality, and frequency of payment. Applicants state that investors buy preferred shares for the purpose of receiving payments at the frequency bargained for, and do not expect the liquidation value of their shares to change.

12. Applicants request an order under section 6(c) granting an exemption from the provisions of section 19(b) and rule 19b–1 to permit each fund's common stock to distribute periodic capital gains dividends (as defined in section 852(b)(3)(C) of the Code) as often as monthly in any one taxable year in respect of its common shares and as often as specified by or determined in accordance with the terms thereof in respect of its preferred shares.[3]

Applicants' Conditions:

Applicants agree that, with respect to each fund seeking to rely on the order, the order will be subject to the following conditions:

I. Compliance Review and Reporting

The fund's chief compliance officer will: (a) Report to the fund Board, no less frequently than once every three months or at the next regularly scheduled quarterly board meeting, whether (i) the fund and the fund adviser have complied with the conditions to the requested order, and (ii) a Material Compliance Matter, as defined in rule 38a–1(e)(2), has occurred with respect to compliance with such conditions; and (b) review the adequacy of the policies and procedures adopted by the fund no less frequently than annually.

II. Disclosures to Fund Shareholders

A. Each Notice to the holders of the fund's common shares, in addition to the information required by section 19(a) and rule 19a–1:

1. Will provide, in a tabular or graphical format:

[2] Returns of capital as used in the application means return of capital for financial accounting purposes and not for tax accounting purposes.

[3] Applicants state that a future fund that relies on the requested order will satisfy each of the representations in the application except that such representations will be made in respect of actions by the board of directors of such future fund and will be made at a future time.

(a) The amount of the distribution, on a per common share basis, together with the amounts of such distribution amount, on a per common share basis and as a percentage of such distribution amount, from estimated: (A) Net investment income; (B) net realized short-term capital gains; (C) net realized long-term capital gains; and (D) return of capital or other capital source;

(b) The fiscal year-to-date cumulative amount of distributions, on a per common share basis, together with the amounts of such cumulative amount, on a per common share basis and as a percentage of such cumulative amount of distributions, from estimated: (A) Net investment income; (B) net realized short-term capital gains; (C) net realized long-term capital gains; and (D) return of capital or other capital source;

(c) The average annual total return in relation to the change in NAV for the 5-year period (or, if the fund's history of operations is less than five years, the time period commencing immediately following the fund's first public offering) ending on the last day of the month prior to the most recent distribution declaration date compared to the current fiscal period's annualized distribution rate expressed as a percentage of NAV as of the last day of the month prior to the most recent distribution declaration date; and

(d) The cumulative total return in relation to the change in NAV from the last completed fiscal year to the last day of the month prior to the most recent distribution declaration date compared to the fiscal year-to-date cumulative distribution rate expressed as a percentage of NAV as of the last day of the month prior to the most recent distribution declaration date.

Such disclosure shall be made in a type size at least as large and as prominent as the estimate of the sources of the current distribution; and

2. Will include the following disclosure:

(a) ''You should not draw any conclusions about the fund's investment performance from the amount of this distribution or from the terms of the fund's Plan'';

(b) ''The fund estimates that it has distributed more than its income and net realized capital gains; therefore, a portion of your distribution may be a return of capital. A return of capital may occur, for example, when some or all of the money that you invested in the fund is paid back to you. A return of capital distribution does not necessarily reflect the fund's investment performance and should not be confused with 'yield' or 'income'''; and

(c) ''The amounts and sources of distributions reported in this Notice are only estimates and are not being provided for tax reporting purposes. The actual amounts and sources of the amounts for [accounting and] tax reporting purposes will depend upon the fund's investment experience during the remainder of its fiscal year and may be subject to changes based on tax regulations. The fund will send you a Form 1099–DIV for the calendar year that will tell you how to report these distributions for federal income tax purposes.''

Such disclosure shall be made in a type size at least as large as and as prominent as any other information in the Notice and placed on the same page in close proximity to the amount and the sources of the distribution.

B. On the inside front cover of each report to shareholders under rule 30e–1 under the Act, the fund will:

1. Describe the terms of the Plan (including the fixed amount or fixed percentage of the distributions and the frequency of the distributions);

2. Include the disclosure required by condition II.A.2.a above;

3. State, if applicable, that the Plan provides that the Board may amend or terminate the Plan at any time without prior notice to fund shareholders; and

4. Describe any reasonably foreseeable circumstances that might cause the fund to terminate the Plan and any reasonably foreseeable consequences of such termination.

C. Each report provided to shareholders under rule 30e–1 and in each prospectus filed with the Commission on Form N–2 under the Act will provide the fund's total return in relation to changes in NAV in the financial highlights table and in any discussion about the fund's total return.

III. Disclosure to Shareholders, Prospective Shareholders and Third Parties

A. The fund will include the information contained in the relevant Notice, including the disclosure required by condition II.A.2 above, in any written communication (other than a Form 1099) about the Plan or distributions under the Plan by the fund, or agents that the fund has authorized to make such communication on the fund's behalf, to any fund common shareholder, prospective common shareholder or third-party information provider;

B. The fund will issue, contemporaneously with the issuance of any Notice, a press release containing the information in the Notice and will file with the Commission the information contained in such Notice, including the disclosure required by condition II.A.2 above, as an exhibit to its next filed Form N–CSR; and

C. The fund will post prominently a statement on its (or its adviser's) Web site containing the information in each Notice, including the disclosure required by condition II.A.2 above, and will maintain such information on such Web site for at least 24 months.

IV. Delivery of 19(a) Notices to Beneficial Owners

If a broker, dealer, bank or other person (''financial intermediary'') holds common stock issued by the fund in nominee name, or otherwise, on behalf of a beneficial owner, the fund: (a) Will request that the financial intermediary, or its agent, forward the Notice to all beneficial owners of the fund's shares held through such financial intermediary; (b) will provide, in a timely manner, to the financial intermediary, or its agent, enough copies of the Notice assembled in the form and at the place that the financial intermediary, or its agent, reasonably requests to facilitate the financial intermediary's sending of the Notice to each beneficial owner of the fund's shares; and (c) upon the request of any financial intermediary, or its agent, that receives copies of the Notice, will pay the financial intermediary, or its agent, the reasonable expenses of sending the Notice to such beneficial owners.

V. Additional Board Determinations for Funds Whose Shares Trade at a Premium If

A. The fund's common shares have traded on the exchange that they primarily trade on at the time in question at an average premium to NAV equal to or greater than 10%, as determined on the basis of the average of the discount or premium to NAV of the fund's common shares as of the close of each trading day over a 12-week rolling period (each such 12-week rolling period ending on the last trading day of each week); and

B. The fund's annualized distribution rate for such 12-week rolling period, expressed as a percentage of NAV as of the ending date of such 12-week rolling period, is greater than the fund's average annual total return in relation to the change in NAV over the 2-year period ending on the last day of such 12-week rolling period; then:

1. At the earlier of the next regularly scheduled meeting or within four months of the last day of such 12-week rolling period, the Board including a majority of the Independent Trustees:

(a) Will request and evaluate, and the fund's adviser will furnish, such information as may be reasonably necessary to make an informed determination of whether the Plan should be continued or continued after amendment;

(b) Will determine whether continuation, or continuation after amendment, of the Plan is consistent with the fund's investment objective(s) and policies and in the best interests of the fund and its shareholders, after considering the information in condition V.B.1.a above; including, without limitation:

(1) Whether the Plan is accomplishing its purpose(s);

(2) The reasonably foreseeable effects of the Plan on the fund's long-term total return in relation to the market price and NAV of the fund's common shares; and

(3) The fund's current distribution rate, as described in condition V.B above, compared with the fund's average annual total return over the 2-year period, as described in condition V.B, or such longer period as the board deems appropriate; and

(c) Based upon that determination, will approve or disapprove the continuation, or continuation after amendment, of the Plan; and

2. The Board will record the information considered by it and the basis for its approval or disapproval of the continuation, or continuation after amendment, of the Plan in its meeting minutes, which must be made and preserved for a period of not less than six years from the date of such meeting, the first two years in an easily accessible place.

VI. Public Offerings

The fund will not make a public offering of the fund's common shares other than:

A. A rights offering below net asset value to holders of the fund's common stock;

B. An offering in connection with a dividend reinvestment plan, merger, consolidation, acquisition, spin-off or reorganization of the fund; or

C. An offering other than an offering described in conditions VI.A and VI.B above, unless, with respect to such other offering:

1. The fund's average annual distribution rate for the six months ending on the last day of the month ended immediately prior to the most recent distribution declaration date,[4] expressed as a percentage of NAV per share as of such date, is no more than 1 percentage point greater than the fund's average annual total return for the 5-year period ending on such date;[5] and

2. The transmittal letter accompanying any registration statement filed with the Commission in connection with such offering discloses that the fund has received an order under section 19(b) to permit it to make periodic distributions of long-term capital gains with respect to its common stock as frequently as twelve times each year, and as frequently as distributions are specified in accordance with the terms of any outstanding preferred stock that such fund may issue.

VII. Amendments to Rule 19b–1

The requested relief will expire on the effective date of any amendment to rule 19b–1 that provides relief permitting certain closed-end investment companies to make periodic distributions of long-term capital gains with respect to their outstanding common stock as frequently as twelve times each year.

By the Commission.

Florence E. Harmon,

Acting Secretary.

[FR Doc. E8–15988 Filed 7–14–08; 8:45 am]

BILLING CODE 8010–01–P

[4] If the fund has been in operation fewer than two years, the measured period will begin immediately following the fund's first public offering.

[5] If the fund has been in operation fewer than five years, the measured period will begin immediately following the fund's first public offering.

SECURITIES AND EXCHANGE COMMISSION

Sunshine Act Meeting

Notice is hereby given, pursuant to the provisions of the Government in the Sunshine Act, Public Law 94–409, that the Securities and Exchange Commission will hold a Closed Meeting on July 17, 2008 at 10 a.m.

Commissioners, Counsel to the Commissioners, the Secretary to the Commission, and recording secretaries will attend the Closed Meeting. Certain staff members who have an interest in the matters also may be present.

The General Counsel of the Commission, or his designee, has certified that, in his opinion, one or more of the exemptions set forth in 5 U.S.C. 552b(c)(5), (7), (9)(B), and (10) and 17 CFR 200.402(a)(5), (7), 9(ii) and (10), permit consideration of the scheduled matters at the Closed Meeting.

Commissioner Casey, as duty officer, voted to consider the items listed for the Closed Meeting in closed session.

The subject matter of the Closed Meeting scheduled for July 17, 2008 will be:

Formal orders of investigation; institution and settlement of injunctive actions; institution and settlement of administrative proceedings of an enforcement nature; other matters related to enforcement proceedings; and an opinion.

At times, changes in Commission priorities require alterations in the scheduling of meeting items.

For further information and to ascertain what, if any, matters have been added, deleted or postponed, please contact: The Office of the Secretary at (202) 551–5400.

Dated: July 10, 2008.

Florence E. Harmon,

Acting Secretary.

[FR Doc. E8–16085 Filed 7–14–08; 8:45 am]

BILLING CODE 8010–01–P

SECURITIES AND EXCHANGE COMMISSION

[Release No. 34–58111; File Nos. SR–Amex–2008–40; SR–NASDAQ–2008–046; SR–NYSE–2008–39; SR–NYSEArca–2008–50]

Self-Regulatory Organizations; American Stock Exchange LLC, New York Stock Exchange LLC, and NYSE Arca, Inc.: Order Granting Approval of Proposed Rule Changes To Adopt a Trading Halt Rule in Connection With the Dissemination of Net Asset Value and Disclosed Portfolio for Certain Derivative Securities Products; The NASDAQ Stock Market LLC: Order Granting Approval of Proposed Rule Changes, as Modified by Amendment No. 1 Thereto, To Adopt a Trading Halt Rule in Connection With the Dissemination of Net Asset Value and Disclosed Portfolio for Certain Derivative Securities Products

July 7, 2008.

I. Introduction

On May 14, 2008, the American Stock Exchange LLC (''Amex''), The NASDAQ Stock Market LLC (''Nasdaq''), the New York Stock Exchange LLC (''NYSE''), and NYSE Arca, Inc. (''NYSE Arca'' and together with Amex, Nasdaq, and NYSE, collectively, the ''Exchanges''), through its wholly owned subsidiary, NYSE Arca Equities, Inc. (''NYSE Arca Equities''), each filed with the Securities and Exchange Commission (''Commission''), pursuant to Section 19(b)(1) of the Securities Exchange Act of 1934 (''Act'')[1] and Rule 19b–4

[1] 15 U.S.C. 78s(b)(1).

thereunder,[2] proposed rule changes to amend their respective rules to require a trading halt (''New Trading Halt Rule'') in certain derivative securities products when the respective Exchange becomes aware that the net asset value (''NAV'') and/or disclosed portfolio (''Disclosed Portfolio''),[3] as applicable, for such derivative securities product is not being disseminated to all market participants at the same time. The proposed rule changes were published for comment in the **Federal Register** on June 4, 2008.[4] On June 17, 2008, Nasdaq filed Amendment No. 1 to its proposed rule change.[5] The Commission received no comments on the proposals. This order approves the proposed rule changes of Amex, NYSE, and NYSE Arca and approves the proposed rule change of Nasdaq, as modified by Amendment No. 1 thereto.

II. Description of the Proposals

Each Exchange proposes to amend its respective rules[6] to require a trading halt in certain derivative securities products[7] that are listed and trading on such Exchange, if such Exchange becomes aware that the NAV and/or Disclosed Portfolio, as applicable, for such derivative product is not being disseminated to all market participants at the same time. In addition, each Exchange would resume trading in such halted derivative securities product only when the NAV and/or Disclosed Portfolio, as applicable, is disseminated to all market participants.[8] Each Exchange represents that, in the event the NAV and/or Disclosed Portfolio, as applicable, for a series of derivative securities product ceases to be disseminated altogether, such Exchange would halt trading in such derivative securities product.

III. Commission's Findings and Order Granting Approval of the Proposed Rule

Changes

After careful consideration, the Commission finds that the proposed rule changes are consistent with the requirements of the Act and the rules and regulations thereunder applicable to a national securities exchange.[9] In particular, the Commission finds that the proposed rule changes are consistent with Section 6(b)(5) of the Act[10] in that they are designed to promote just and equitable principles of trade, to foster cooperation and coordination with persons engaged in regulating, clearing, settling, processing information with respect to, and facilitating transactions in securities, to remove impediments to and perfect the mechanism of a free and open market and a national market system, and, in general, to protect investors and the public interest.

The Commission believes that the Exchanges' respective trading halt rules are reasonably designed to prevent trading in certain derivative securities products when the availability of certain information is impaired. Specifically, each Exchange proposes to require a trading halt in certain derivative securities products that are listed and trading on such Exchange, if such Exchange becomes aware that the NAV and/or Disclosed Portfolio, as applicable, for such derivative product is not being disseminated to all market participants at the same time. In addition, each Exchange would resume trading in such halted derivative securities product only when the NAV and/or Disclosed Portfolio, as applicable, is disseminated to all market participants. The Commission believes that the proposed rule changes are intended to protect investors and the public interest when key information relating to the NAV or the Disclosed Portfolio becomes unavailable or available only to some market participants, but not all participants, at the time of dissemination. The Commission notes that individual listing standards for many derivative securities products already include a similar trading halt requirement.[11] As such, the Commission believes it is

[2] 17 CFR 240.19b–4.

[3] ''Disclosed Portfolio'' is applicable only with respect to a series of Managed Fund Shares and is defined as the identities and quantities of the securities and other assets that: (1) Are held by a registered investment company organized as an open-end management investment company or similar entity that invests in a portfolio of securities selected by such investment company's investment adviser consistent such investment company's investment objectives and policies; and (2) form the basis for such investment company's calculation of NAV. *See* Amex Rule 1002B (setting forth the continued listing standards for Managed Fund Shares and requiring, among other things, that the Disclosed Portfolio be disseminated at least once daily and made available to all market participants at the same time) and NYSE Arca Equities Rule 8.600 (setting forth the listing standards for Managed Fund Shares and requiring, among other things, that the Disclosed Portfolio be disseminated at least once daily and made available to all market participants at the same time). *See infra* note 5 (noting Nasdaq's recent adoption of listing standards for Managed Fund Shares).

[4] *See* Securities Exchange Act Release No. 57881 (May 29, 2008), 73 FR 31902.

[5] In Amendment No. 1, Nasdaq revised its proposal to reflect its recent adoption of listing standards for Managed Fund Shares under Nasdaq Rule 4420(o), which requires, among other things, that the Disclosed Portfolio be disseminated at least once daily and made available to all market participants at the same time. *See* Securities Exchange Act Release No. 57962 (June 13, 2008), 73 FR 35175 (June 20, 2008) (SR–NASDAQ–2008–039) (approving the adoption of listing standards for Managed Fund Shares and certain other related rule changes). Because Amendment No. 1 to Nasdaq's proposed rule change is technical and conforming in nature, it is not subject to notice and comment.

[6] Amex seeks to adopt new Amex Rule 117A and Commentary.01 thereto (Net Asset Value/Disclosed Portfolio Dissemination and Trading Halts); Nasdaq seeks to amend Nasdaq Rule 4120 (Trading Halts); NYSE seeks to amend NYSE Rule 123D (Openings and Halts in Trading); and NYSE Arca seeks to amend NYSE Arca Equities Rule 7.34 (Trading Sessions).

[7] Amex, Nasdaq, and NYSE Arca seek to apply their respective New Trading Halt Rules to certain derivative securities products for which: (1) Each such Exchange has listing and trading standards; and (2) an NAV and, in the case of Managed Fund Shares, a Disclosed Portfolio, is disseminated. *See* proposed Amex Rule 117A (applying Amex's New Trading Halt Rule to Portfolio Depositary Receipts (Amex Rule 1000–AEMI), Index Fund Shares (Amex Rule 1000A–AEMI), Trust Issued Receipts (Commentary.07 to Amex Rule 1202), Managed Fund Shares (Amex Rule 1000B), Commodity-Based Trust Shares (Amex Rule 1200A), Currency Trust Shares (Amex Rule 1200B), Paired Trust Shares (Amex Rule 1400), Partnership Units (Amex Rule 1500), and Trust Units (Amex Rule 1600)); proposed Nasdaq Rule 4120(a)(10) (applying Nasdaq's New Trading Halt Rule to Portfolio Depository Receipts (Nasdaq Rule 4420(i)), Index Fund Shares (Nasdaq Rule 4420(j)), Trust Issued Receipts (Nasdaq Rule 4420(l)), Commodity-Related Securities (as defined in Nasdaq Rule 4630), Managed Fund Shares (Nasdaq Rule 4420(o)), and securities representing interests in unit investment trusts or investment companies); and proposed NYSE Arca Equities Rule 7.34(a)(5) (applying NYSE Arca's New Trading Halt Rule to Investment Company Units (NYSE Arca Equities Rule 5.2(j)(3)), Portfolio Depositary Receipts (NYSE Arca Equities Rule 8.100), Trust Issued Receipts (NYSE Arca Equities Rule 8.200), Commodity-Based Trust Shares (NYSE Arca Equities Rule 8.201), Currency Trust Shares (NYSE Arca Equities Rule 8.202), Commodity Index Trust Shares (NYSE Arca Equities Rule 8.203), Commodity Futures Trust Shares (NYSE Arca Equities Rule 8.204), Partnership Units (NYSE Arca Equities Rule 8.300), Paired Trust Shares (NYSE Arca Equities Rule 8.400), Trust Units (NYSE Arca Equities Rule 8.500), and Managed Fund Shares (NYSE Arca Equities Rule 8.600)). NYSE seeks to apply its New Trading Halt Rule to certain derivative securities products for which: (1) NYSE has listing and trading standards; and (2) an NAV is disseminated (NYSE does not have listing standards for Managed Fund Shares). *See* proposed NYSE Rule 123D(5) (applying NYSE's New Trading Halt Rule to Investment Company Units (NYSE Rule 1100), Trust Issued Receipts (NYSE Rule 1200), Currency Trust Shares (NYSE Rule 1300A), and Commodity Trust Shares (NYSE Rule 1300B)).

[8] Nasdaq's New Trading Halt Rule also provides that, in the case of a halted Derivative Securities Products (as defined in Nasdaq Rule 4120(b)(4)(A)) trading on Nasdaq pursuant to unlisted trading privileges, Nasdaq would resume trading in such Derivative Securities Product only until such time trading resumes in the listing market for such Derivative Securities Product. The Nasdaq Proposal also seeks to make technical, non-substantive changes to Nasdaq Rules 4120(a) and (c) to incorporate new Nasdaq Rule 4120(a)(10).

[9] In approving these proposed rule changes, the Commission notes that it has considered the impact on efficiency, competition, and capital formation of each proposed rule. *See* 15 U.S.C. 78c(f).

[10] 15 U.S.C. 78f(b)(5).

[11] See, *e.g.*, Amex Rule 1002B(iv)(d); Nasdaq Rule 4420(o)(4)(B)(iv); and NYSE Arca Equities Rule 8.600(d)(2)(D).

reasonable and consistent with the Act for the Exchanges to adopt new trading halt criteria for certain derivative products in the manner described in the respective proposals.

IV. Conclusion

It is therefore ordered, pursuant to Section 19(b)(2) of the Act,[12] that the proposed rule changes (SR–Amex–2008–40; SR–NYSE–2008–39; SR–NYSEArca–2008–50) and the proposed rule change (SR–NASDAQ–2008–046), as modified by Amendment No. 1 thereto, be, and they hereby are, approved.

For the Commission, by the Division of Trading and Markets, pursuant to delegated authority.[13]

Florence E. Harmon,

Acting Secretary.

[FR Doc. E8–16059 Filed 8–14–08; 8:45 am]

BILLING CODE 8010–01–P

[12] 15 U.S.C. 78s(b)(2).

[13] 17 CFR 200.30–3(a)(12).

SECURITIES AND EXCHANGE COMMISSION

[Release No. 34–58117; File No. SR–CBOE–2008–69]

Self-Regulatory Organizations; Chicago Board Options Exchange, Incorporated; Notice of Filing and Immediate Effectiveness of Proposed Rule Change Relating to an Extension of the Linkage Fee Pilot Program

July 8, 2008.

Pursuant to Section 19(b)(1) of the Securities Exchange Act of 1934 (''Act''),[1] and Rule 19b–4 thereunder,[2] notice is hereby given that on June 30, 2008, Chicago Board Options Exchange, Incorporated (''CBOE'' or ''Exchange'') filed with the Securities and Exchange Commission (''Commission'') the proposed rule change as described in Items I, II, and III below, which Items have been prepared substantially by CBOE. The Commission is publishing this notice to solicit comments on the proposed rule change from interested persons.

I. Self-Regulatory Organization's Statement of the Terms of Substance of the Proposed Rule Change

CBOE proposes to amend its Fees Schedule to extend through July 31, 2009 the Options Intermarket Linkage (''Linkage'') fees pilot program. The text of the proposed rule change is available at *http://www.cboe.org/legal,* the Exchange, and the Commission's Public Reference Room.

II. Self-Regulatory Organization's Statement of the Purpose of, and Statutory Basis for, the Proposed Rule Change

In its filing with the Commission, CBOE included statements concerning the purpose of and basis for the proposed rule change and discussed any comments it received on the proposed rule change. The text of these statements may be examined at the places specified in Item IV below. The Exchange has prepared summaries, set forth in Sections A, B, and C below, of the most significant aspects of such statements.

A. Self-Regulatory Organization's Statement of the Purpose of, and Statutory Basis for, the Proposed Rule Change

1. Purpose

The Exchange's fees for Principal (''P'') and Principal Acting as Agent (''P/A'') orders [3] are operating under a pilot program scheduled to expire on July 31, 2008.[4] The Exchange proposes to amend its Fees Schedule to extend the pilot program until July 31, 2009. The Exchange is proposing no other changes to the operation of the pilot program.

The Exchange assesses its members the following Linkage order related fees: (i) $.30 per contract transaction fee, and (ii) $.10 per contract surcharge fee on transactions in options on the Nasdaq-100 Index (MNX and NDX) and options on the Russell 2000 Index (RUT).[5] Satisfaction orders are not assessed Exchange fees.

The Exchange believes that extension of the Linkage fee pilot program until July 31, 2009 will give the Commission further opportunity to evaluate the appropriateness of Linkage fees.

The Exchange also proposes to amend Section 21 of the Fees Schedule to change the Linkage fees pilot expiration date included in that section to July 31, 2009, thereby extending the term of the DPM Linkage Fees Credit program for PA orders.

2. Statutory Basis

The Exchange believes the proposed rule change is consistent with Section 6(b) of the Act,[6] in general, and furthers the objectives of Section 6(b)(4) [7] of the Act in particular, in that it is designed to provide for the equitable allocation of reasonable dues, fees, and other charges among CBOE members and other persons using its facilities. The Exchange believes that extension of the Linkage fee pilot program until July 31, 2009 will give the Commission further opportunity to evaluate the appropriateness of Linkage fees.

B. Self-Regulatory Organization's Statement on Burden on Competition

CBOE does not believe that the proposed rule change will impose any burden on competition that is not necessary or appropriate in furtherance of purposes of the Act.

C. Self-Regulatory Organization's Statement on Comments on the Proposed Rule Change Received From Members, Participants, or Others

No written comments were solicited or received with respect to the proposed rule change.

III. Date of Effectiveness of the Proposed Rule Change and Timing for Commission Action

Because the foregoing proposed rule change does not:

(i) Significantly affect the protection of investors or the public interest;

(ii) Impose any significant burden on competition; and

(iii) Become operative for 30 days from the date on which it was filed, or such shorter time as the Commission may designate, it has become effective pursuant to Section 19(b)(3)(A) of the Act [8] and Rule 19b–4(f)(6) thereunder.[9]

At any time within 60 days of the filing of the proposed rule change, the Commission may summarily abrogate such rule change if it appears to the Commission that such action is necessary or appropriate in the public interest, for the protection of investors,

[1] 15 U.S.C. 78s(b)(1).

[2] 17 CFR 240.19b–4.

[3] Under the Plan for the Purpose of Creating and Operating an Options Intermarket Linkage (''Plan'') and Exchange Rule 6.80(12), which tracks the language of the Plan, a ''Linkage Order'' means an Immediate or Cancel Order routed through the Linkage as permitted under the Plan. There are three types of Linkage Orders: (i) ''P/A Order'', which is an order for the principal account of a specialist (or equivalent entity on another Participant Exchange that is authorized to represent Public Customer orders), reflecting the terms of a related unexecuted Public Customer order for which the specialist is acting as agent; (ii) ''P Order'', which is an order for the principal account of an Eligible Market Maker and is not a P/A Order; and (iii) ''Satisfaction Order,'' which is an order sent through the Linkage to notify a member of another Participant Exchange of a Trade-Through and to seek satisfaction of the liability arising from that Trade-Through.

[4] *See* Securities Exchange Act Release No. 56132 (July 25, 2007), 72 FR 42158 (August 1, 2007) (SR–CBOE–2007–71).

[5] *See* CBOE Fees Schedule, Footnote 14. Surcharge fees are also assessed on OEX, XEO, SPX, volatility index options, DJX and DXL options; however, Linkage fees do not apply to these products as they are not multiply listed.

[6] 15 U.S.C. 78f(b).

[7] 15 U.S.C. 78f(b)(4).

[8] 15 U.S.C. 78s(b)(3)(A).

[9] 17 CFR 240.19b–4(f)(6).

or otherwise in furtherance of the purposes of the Act.

IV. Solicitation of Comments

Interested persons are invited to submit written data, views and arguments concerning the foregoing, including whether the proposed rule change is consistent with the Act. Comments may be submitted by any of the following methods:

Electronic Comments

- Use the Commission's Internet comment form (*http://www.sec.gov/rules/sro.shtml*); or
- Send an e-mail to *rule-comments@sec.gov.* Please include File Number SR–CBOE–2008–69 on the subject line.

Paper Comments

- Send paper comments in triplicate to Secretary, Securities and Exchange Commission, 100 F Street, NE., Washington, DC 20549–1090.

All submissions should refer to File Number SR–CBOE–2008–69. This file number should be included on the subject line if e-mail is used. To help the Commission process and review your comments more efficiently, please use only one method. The Commission will post all comments on the Commission's Internet Web site (*http://www.sec.gov/rules/sro.shtml*). Copies of the submission, all subsequent amendments, all written statements with respect to the proposed rule change that are filed with the Commission, and all written communications relating to the proposed rule change between the Commission and any person, other than those that may be withheld from the public in accordance with the provisions of 5 U.S.C. 552, will be available for inspection and copying in the Commission's Public Reference Room on official business days between the hours of 10 a.m. and 3 p.m. Copies of such filing also will be available for inspection and copying at the principal office of the Exchange. All comments received will be posted without change; the Commission does not edit personal identifying information from submissions. You should submit only information that you wish to make available publicly. All submissions should refer to File Number SR–CBOE–2008–69 and should be submitted on or before August 5, 2008.

For the Commission, by the Division of Trading and Markets, pursuant to delegated authority.[10]

Florence E. Harmon,

Acting Secretary.

[FR Doc. E8–16060 Filed 7–14–08; 8:45 am]

BILLING CODE 8010–01–P

SECURITIES AND EXCHANGE COMMISSION

[Release No. 34–58119; File No. SR-CBOE–2008–53]

Self-Regulatory Organizations; Chicago Board Options Exchange, Incorporated; Order Approving Proposed Rule Change Pertaining to the Imposition of Fines for Minor Rule Violations

July 8, 2008.

On May 19, 2008, the Chicago Board Options Exchange, Incorporated (''CBOE'' or ''Exchange'') filed with the Securities and Exchange Commission (''Commission''), pursuant to Section 19(b)(1) of the Securities Exchange Act of 1934 (''Act'')[1] and Rule 19b–4 thereunder,[2] a proposed rule change to amend CBOE Rule 17.50 (Imposition of Fines for Minor Rule Violations) and to revise the provisions of CBOE 17.50(g)(1) (Violations of Position Limits Rules). The proposed rule change was published for comment in the **Federal Register** on June 5, 2008.[3] The Commission received no comments regarding the proposal. This order approves the proposed rule change.

The proposal would, in connection with any member or customer who exceeds the Exchange's position limit in accordance with CBOE Rule 4.11, increase the fine levels specified in the Minor Rule Violation Plan (''MRVP''); consolidate individual members, member organizations, and customers into one category; and lengthen the surveillance period from a 12-month period to a rolling 24-month period.

The Commission finds that the proposed rule change is consistent with the requirements of the Act and the rules and regulations thereunder applicable to a national securities exchange.[4] In particular, the Commission believes that the proposal is consistent with Section 6(b)(5) of the Act,[5] which requires that the rules of an exchange be designed to promote just and equitable principles of trade, to facilitate transactions in securities, to remove impediments to and perfect the mechanism of a free and open market and a national market system, and, in general, to protect investors and the public interest. The Commission further believes that CBOE's proposal is consistent with Sections 6(b)(1) and 6(b)(6) of the Act,[6] which require that the rules of an exchange enforce compliance with, and provide appropriate discipline for, violations of Commission and Exchange rules. In addition, because existing CBOE Rule 17.50 provides procedural rights to a person fined under the MRVP to contest the fine and permits a hearing on the matter, the Commission believes that the MRVP, as amended by this proposal, provides a fair procedure for the disciplining of members and persons associated with members, consistent with Sections 6(b)(7) and 6(d)(1) of the Act.[7] In addition, the Commission finds that the proposal is consistent with the public interest, the protection of investors, or otherwise in furtherance of the purposes of the Act, as required by Rule 19d–1(c)(2) under the Act,[8] which governs minor rule violation plans. The Commission believes that the proposed rule change should strengthen the Exchange's ability to carry out its oversight and enforcement responsibilities as an SRO in cases where full disciplinary proceedings are unsuitable in view of the minor nature of the particular violation.

In approving this proposed rule change, the Commission in no way minimizes the importance of compliance with CBOE rules and all other rules subject to the imposition of fines under the MRVP. The Commission believes that the violation of any SRO rules, as well as Commission rules, is a serious matter. However, the MRVP provides a reasonable means of addressing rule violations that do not rise to the level of requiring formal disciplinary proceedings, while providing greater flexibility in handling certain violations. The Commission expects that CBOE would continue to conduct surveillance with due diligence and make a determination based on its findings, on a case-by-case basis, whether a fine of more or less than the recommended amount is appropriate for a violation under the CBOE MRVP or whether a violation requires formal

[10] 17 CFR 200.30–3(a)(12).

[1] 15 U.S.C. 78s(b)(1).

[2] 17 CFR 240.19b–4.

[3] *See* Securities Exchange Act Release No. 57883 (May 29, 2008), 73 FR 32065.

[4] In approving this proposed rule change, the Commission notes that it has considered the proposed rule's impact on efficiency, competition, and capital formation. *See* 15 U.S.C. 78c(f).

[5] 15 U.S.C. 78f(b)(5).

[6] 15 U.S.C. 78f(b)(1) and 78f(b)(6).

[7] 15 U.S.C. 78f(b)(7) and 78f(d)(1).

[8] 17 CFR 240.19d–1(c)(2).

disciplinary action under CBOE Chapter XVII.

It is therefore ordered, pursuant to Section 19(b)(2) of the Act[9] and Rule 19d–1(c)(2) under the Act,[10] that the proposed rule change (SR-CBOE–2008–53) be, and hereby is, approved and declared effective.

For the Commission, by the Division of Trading and Markets, pursuant to delegated authority.[11]

Florence E. Harmon,

Acting Secretary.

[FR Doc. E8–16061 Filed 7–14–08; 8:45 am]

BILLING CODE 8010–01–P

[9] 15 U.S.C. 78s(b)(2).

[10] 17 CFR 240.19d–1(c)(2).

[11] 17 CFR 200.30–3(a)(12); 17 CFR 200.30–3(a)(44).

SECURITIES AND EXCHANGE COMMISSION

[Release No. 34–58118; File No. SR–FINRA–2008–030]

Self-Regulatory Organizations: Financial Industry Regulatory Authority, Inc.; Notice of Filing of Proposed Rule Change To Adopt FINRA Rule 3130 (Annual Certification of Compliance and Supervisory Processes) in the Consolidated FINRA Rulebook

July 8, 2008.

Pursuant to Section 19(b)(1) of the Securities Exchange Act of 1934 (''Act'')[1] and Rule 19b–4 thereunder,[2] notice is hereby given that on June 18, 2008, Financial Industry Regulatory Authority, Inc. (''FINRA'') (f/k/a National Association of Securities Dealers, Inc. (''NASD'')) filed with the Securities and Exchange Commission (''Commission'') the proposed rule change as described in Items I, II, and III below, which Items have been substantially prepared by FINRA. The Commission is publishing this notice to solicit comments on the proposed rule change from interested persons.

I. Self-Regulatory Organization's Statement of the Terms of Substance of the Proposed Rule Change

FINRA is proposing to adopt NASD Rule 3013 (Annual Certification of Compliance and Supervisory Processes) and IM–3013 (Annual Compliance and Supervision Certification) as a FINRA rule in the consolidated FINRA rulebook without material change and to delete the corresponding provisions in Incorporated NYSE Rule 342.30 and NYSE Rule Interpretations 311(b)(5)/04 through /05 and 342.30(d)/01 through (e)/01.[3] The proposed rule change would renumber NASD Rule 3013 and IM–3013 as FINRA Rule 3130 in the consolidated FINRA rulebook. The text of the proposed rule change is at FINRA's Web site at *http://www.finra.org,* at FINRA's principal office, and at the Commission's Public Reference Room.

II. Self-Regulatory Organization's Statement of the Purpose of, and Statutory Basis for, the Proposed Rule Change

In its filing with the Commission, FINRA included statements concerning the purpose of and basis for the proposed rule change and discussed any comments it received on the proposed rule change. The text of these statements may be examined at the places specified in Item IV below. FINRA has prepared summaries, set forth in sections A, B, and C below, of the most significant aspects of such statements.

A. Self-Regulatory Organization's Statement of the Purpose of, and Statutory Basis for, the Proposed Rule Change

1. Purpose

As part of the process of developing the new consolidated rulebook (the ''Consolidated FINRA Rulebook''),[4] FINRA is proposing to adopt NASD Rule 3013 (Annual Certification of Compliance and Supervisory Processes) and IM–3013–1 (Annual Compliance and Supervision Certification) as a FINRA Rule in the Consolidated FINRA Rulebook.

NASD Rule 3013 and Incorporated NYSE Rule 342 require each member to designate one or more principals to serve as a chief compliance officer (''CCO''). These Rules further require that the chief executive officer(s) (''CEO'') certify annually that the member has in place processes to establish, maintain, review, modify and test policies and procedures reasonably designed to achieve compliance with applicable NASD (or NYSE) rules and federal securities laws and regulations. The certification includes not only a statement that the member has in place certain compliance processes, but also that the CEO(s) has conducted one or more meetings with the CCO(s) in the preceding 12 months to discuss the processes. Incorporated NYSE Rule 342 and NASD IM–3013 explain that the mandated meetings between the CEO(s) and CCO(s) must include a discussion of the member's compliance efforts to date and identify and address significant compliance problems and plans for emerging business areas. NASD IM–3013 contains additional guidance, including setting forth the expertise that is expected of a CCO. The same expertise requirements are also found in Incorporated NYSE Rule Interpretation 342.30.

There currently are four differences in the rules. First, NASD IM–3013 requires that the member provide to its board of directors and audit committees (or equivalent bodies) the report that evidences the processes to which the CEO(s) certifies either prior to execution of the certification or at the earlier of their next scheduled meetings or within 45 days of certification. The Incorporated NYSE rules require submission of the report to those bodies prior to certification. FINRA does not intend to require the board of directors or audit committee to review or consider the report as a condition to the CEO executing the certification; rather, FINRA intends the provision to ensure that those governing bodies remain informed of this aspect of the member's compliance system in the context of their overall responsibility for governance and internal controls of the member for which they serve. Accordingly, the proposed rule change would maintain the NASD rule requirements.

Second, the current rules differ in the certification deadline. Incorporated NYSE Rule 342.30 requires certification as part of the submission of a member's annual compliance report, which is due by April 1 of each year. NASD Rule 3013 requires certification not later than the anniversary of the prior year's certification. And while NASD allowed members to execute their first certification no later than April 1, 2006, to accommodate Dual Members, many FINRA-only firms executed their first certification earlier than that and thus have differing anniversary dates. Moreover, new members are required to execute their first certification within a year of approval for membership; therefore some firms necessarily are on a cycle that does not correspond to April 1. The proposed rule change would maintain the NASD rule deadline to provide firms the flexibility to certify on a schedule that meets with their

[1] 15 U.S.C. 78s(b)(1).

[2] 17 CFR 240.19b–4.

[3] *See infra* note 4 regarding ''Incorporated NYSE Rules.''

[4] The current FINRA rulebook consists of two sets of rules: (1) NASD Rules and (2) rules incorporated from NYSE (''Incorporated NYSE Rules'') (together referred to as the ''Transitional Rulebook''). The Incorporated NYSE Rules apply only to those members of FINRA that are also members of the NYSE (''Dual Members''). Dual Members also must comply with NASD Rules. For more information about the rulebook consolidation process, *see* FINRA *Information Notice,* March 12, 2008 (Rulebook Consolidation Process).

organizational structure and procedures. Firms that have certified on April 1 of each year could continue to do so on that date.

Third, Incorporated NYSE Rule 342.30 requires that the member submit its certification to the Exchange, whereas the NASD rule requires only that the certification be maintained for inspection. FINRA believes the submission of the certification creates an unnecessary—albeit small—additional burden on members with no attendant benefits to FINRA's examination program. Therefore, the proposed rule change would retain the NASD requirement that the certifications be kept for inspection by members.

Finally, while both rules permit designation of multiple CCOs subject to certain conditions, Incorporated NYSE Rule Interpretation 311(b)(5) requires Exchange approval of the allocation of supervisory responsibilities between those CCOs. By comparison, the NASD rules rely on the business judgment of the member and require only that the member define and document the areas of responsibility allocated to each CCO. FINRA believes the NASD approach is more appropriate, and therefore the proposed rule change would not adopt the approval requirement into the new rule in the Consolidated FINRA Rulebook.

The proposed rule change would replace NASD Rule 3013 and IM–3013 with a single rule that integrates the substance of the IM either as provisions in the new rule or as supplementary material.

As noted above, FINRA will announce the implementation date of the proposed rule change in a *Regulatory Notice* to be published no later than 60 days following Commission approval.

2. Statutory Basis

FINRA believes that the proposed rule change is consistent with the provisions of Section 15A(b)(6) of the Act,[5] which requires, among other things, that FINRA rules must be designed to prevent fraudulent and manipulative acts and practices, to promote just and equitable principles of trade, and, in general, to protect investors and the public interest. The rules being adopted as part of the Consolidated FINRA Rulebook previously have been found to meet the statutory requirements, and FINRA believes those rules have since proven effective in achieving the statutory mandates.

[5] 15 U.S.C. 78o–3(b)(6).

B. Self-Regulatory Organization's Statement on Burden on Competition

FINRA does not believe that the proposed rule change will result in any burden on competition that is not necessary or appropriate in furtherance of the purposes of the Act.

C. Self-Regulatory Organization's Statement on Comments on the Proposed Rule Change Received From Members, Participants, or Others

Written comments were neither solicited nor received.

III. Date of Effectiveness of the Proposed Rule Change and Timing for Commission Action

Within 35 days of the date of publication of this notice in the **Federal Register** or within such longer period (i) as the Commission may designate up to 90 days of such date if it finds such longer period to be appropriate and publishes its reasons for so finding or (ii) as to which the self-regulatory organization consents, the Commission will:

(A) By order approve such proposed rule change, or

(B) Institute proceedings to determine whether the proposed rule change should be disapproved.

IV. Solicitation of Comments

Interested persons are invited to submit written data, views and arguments concerning the foregoing, including whether the proposed rule change is consistent with the Act. Comments may be submitted by any of the following methods:

Electronic Comments

- Use the Commission's Internet comment form (*http://www.sec.gov/rules/sro.shtml*); or
- Send an e-mail to *rule-comments@sec.gov.* Please include File Number SR–FINRA–2008–030 on the subject line.

Paper Comments

- Send paper comments in triplicate to Secretary, Securities and Exchange Commission, 100 F Street, NE., Washington, DC 20549–1090.

All submissions should refer to File Number SR–FINRA–2008–030. This file number should be included on the subject line if e-mail is used. To help the Commission process and review your comments more efficiently, please use only one method. The Commission will post all comments on the Commission's Internet Web site (*http://www.sec.gov/rules/sro.shtml*). Copies of the submission, all subsequent amendments, all written statements with respect to the proposed rule change that are filed with the Commission, and all written communications relating to the proposed rule change between the Commission and any person, other than those that may be withheld from the public in accordance with the provisions of 5 U.S.C. 552, will be available for inspection and copying in the Commission's Public Reference Room, 100 F Street, NE., Washington, DC 20549, on official business days between the hours of 10 a.m. and 3 p.m. Copies of such filing also will be available for inspection and copying at the principal office of FINRA. All comments received will be posted without change; the Commission does not edit personal identifying information from submissions. You should submit only information that you wish to make available publicly.

All submissions should refer to File Number SR–FINRA–2008–030 and should be submitted on or before August 5, 2008.

For the Commission, by the Division of Trading and Markets, pursuant to delegated authority.[6]

Florence E. Harmon,

Acting Secretary.

[FR Doc. E8–15989 Filed 7–14–08; 8:45 am]

BILLING CODE 8010–01–P

[6] 17 CFR 200.30–3(a)(12).

SMALL BUSINESS ADMINISTRATION

[Disaster Declaration #11286 and #11287]

Indiana Disaster Number IN–00019

AGENCY: U.S. Small Business Administration.

ACTION: Amendment 6.

SUMMARY: This is an amendment of the Presidential declaration of a major disaster for the State of Indiana (FEMA–1766–DR), dated 06/11/2008.

Incident: Severe Storms, Flooding, and Tornadoes.

Incident Period: 05/30/2008 and continuing through 06/27/2008.

Effective Date: 06/27/2008.

Physical Loan Application Deadline Date: 08/11/2008.

EIDL Loan Application Deadline Date: 03/11/2009.

ADDRESSES: Submit completed loan applications to: U.S. Small Business Administration, Processing and Disbursement Center, 14925 Kingsport Road, Fort Worth, TX 76155.

FOR FURTHER INFORMATION CONTACT: A. Escobar, Office of Disaster Assistance, U.S. Small Business Administration,

409 3rd Street, SW., Suite 6050, Washington, DC 20416.

SUPPLEMENTARY INFORMATION: The notice of the President's major disaster declaration for the State of Indiana, dated 06/11/2008, is hereby amended to establish the incident period for this disaster as beginning 05/30/2008 and continuing through 06/27/2008.

All other information in the original declaration remains unchanged.

(Catalog of Federal Domestic Assistance Numbers 59002 and 59008)

James E. Rivera,

Acting Associate Administrator for Disaster Assistance.

[FR Doc. E8–16111 Filed 7–14–08; 8:45 am]

BILLING CODE 8025–01–P

SMALL BUSINESS ADMINISTRATION

[Disaster Declaration # 11281]

Indiana Disaster Number IN–00020

AGENCY: U.S. Small Business Administration.

ACTION: Amendment 4.

SUMMARY: This is an amendment of the Presidential declaration of a major disaster for Public Assistance Only for the State of Indiana (FEMA–1766–DR), dated 06/08/2008.

Incident: Severe Storms, Flooding, and Tornadoes.

Incident Period: 05/30/2008 through 06/27/2008.

Effective Date: 06/27/2008.

Physical Loan Application Deadline Date: 08/07/2008.

ADDRESSES: Submit completed loan applications to: U.S. Small Business Administration, Processing and Disbursement Center, 14925 Kingsport Road, Fort Worth, TX 76155.

FOR FURTHER INFORMATION CONTACT: A. Escobar, Office of Disaster Assistance, U.S. Small Business Administration, 409 3rd Street, SW., Suite 6050, Washington, DC 20416

SUPPLEMENTARY INFORMATION: The notice of the President's major disaster declaration for Private Non-Profit organizations in the State of Indiana, dated 06/08/2008, is hereby amended to establish the incident period for this disaster as beginning 05/30/2008 and continuing through 06/27/2008.

All other information in the original declaration remains unchanged.

(Catalog of Federal Domestic Assistance Number 59008)

James E. Rivera,

Acting Associate Administrator for Disaster Assistance.

[FR Doc. E8–16113 Filed 7–14–08; 8:45 am]

BILLING CODE 8025–01–P

SMALL BUSINESS ADMINISTRATION

[Disaster Declaration # 11286 and # 11287]

Indiana Disaster Number IN–00019

AGENCY: U.S. Small Business Administration.

ACTION: Amendment 7.

SUMMARY: This is an amendment of the Presidential declaration of a major disaster for the State of Indiana (FEMA–1766–DR), dated 06/11/2008.

Incident: Severe Storms, Flooding, and Tornadoes.

Incident Period: 05/30/2008 through 06/27/2008.

Effective Date: 07/08/2008.

Physical Loan Application Deadline Date: 08/11/2008.

EIDL Loan Application Deadline Date: 03/11/2009.

ADDRESSES: Submit completed loan applications to: U.S. Small Business Administration, Processing and Disbursement Center, 14925 Kingsport Road, Fort Worth, TX 76155.

FOR FURTHER INFORMATION CONTACT: A. Escobar, Office of Disaster Assistance, U.S. Small Business Administration, 409 3rd Street, SW., Suite 6050, Washington, DC 20416.

SUPPLEMENTARY INFORMATION: The notice of the Presidential disaster declaration for the State of Indiana, dated 06/11/2008 is hereby amended to include the following areas as adversely affected by the disaster:

Primary Counties: (Physical Damage and Economic Injury Loans):

Madison

All other counties contiguous to the above named primary county have previously been declared.

All other information in the original declaration remains unchanged.

(Catalog of Federal Domestic Assistance Numbers 59002 and 59008)

James E. Rivera,

Acting Associate Administrator for Disaster Assistance.

[FR Doc. E8–16114 Filed 7–14–08; 8:45 am]

BILLING CODE 8025–01–P

SMALL BUSINESS ADMINISTRATION

[Disaster Declaration # 11295 and # 11296]

West Virginia Disaster Number WV–00009

AGENCY: U.S. Small Business Administration.

ACTION: Amendment 2.

SUMMARY: This is an amendment of the Presidential declaration of a major disaster for the State of West Virginia (FEMA–1769–DR), dated 06/19/2008.

Incident: Severe Storms, Tornadoes, Flooding, Mudslides, and Landslides.

Incident Period: 06/03/2008 through 06/07/2008.

Effective Date: 07/08/2008.

Physical Loan Application Deadline Date: 08/19/2008.

EIDL Loan Application Deadline Date: 03/17/2009.

ADDRESSES: Submit completed loan applications to: U.S. Small Business Administration, Processing and Disbursement Center, 14925 Kingsport Road, Fort Worth, TX 76155.

FOR FURTHER INFORMATION CONTACT: A. Escobar, Office of Disaster Assistance, U.S. Small Business Administration, 409 3rd Street, SW., Suite 6050, Washington, DC 20416.

SUPPLEMENTARY INFORMATION: The notice of the Presidential disaster declaration for the State of West Virginia, dated 06/19/2008 is hereby amended to include the following areas as adversely affected by the disaster:

Primary Counties: (Physical Damage and Economic Injury Loans):

Clay

Contiguous Counties: (Economic Injury Loans Only):

West Virginia: Fayette, Nicholas

All other information in the original declaration remains unchanged.

(Catalog of Federal Domestic Assistance Numbers 59002 and 59008)

James E. Rivera,

Acting Associate Administrator for Disaster Assistance.

[FR Doc. E8–16112 Filed 7–14–08; 8:45 am]

BILLING CODE 8025–01–P

DEPARTMENT OF STATE

[Public Notice 6290]

Privacy Act of 1974 Amendment of Prefatory Statement of Routine Uses to Department of State Privacy Act Issuances

Summary: Notice is hereby given that the Department of State proposes to amend the Prefatory Statement of

Routine Uses to Department of State Privacy Act Issuances, pursuant to the provisions of the Privacy Act of 1974, as amended (5 U.S.C. 552a), and the Office of Management and Budget (OMB) Circular No. A–130, Appendix I. The Department's report was filed with the OMB on July 8, 2008.

It is proposed that the amended Prefatory Statement notify individuals of an additional routine use of Privacy Act information. The OMB requires all federal agencies to be able to quickly and efficiently respond in the event of a breach of personally identifiable information and directed agencies to publish a routine use that will allow disclosure of Privacy Act information to persons and entities in a position to assist with notifying affected individuals, or playing a role in preventing, minimizing, or remedying any harm from a breach.

The Department of State is proposing to add a new routine use that will allow it to meet the OMB objective of responding quickly and efficiently should such a breach occur. The new routine use will help the Department prevent, minimize, or remedy a data breach or compromise. All responses to a confirmed or suspected breach will be prepared on a case-by-case basis. The purpose of the amendment to the Prefatory Statement is to allow the Department to respond more quickly and efficiently in the event of a breach of personally identifiable information and, when necessary, to disclose information regarding the breach to individuals identified under the routine use, and to give the affected individuals full and fair notice of the extent of these potential disclosures.

The proposed routine use is compatible with the purpose for which information maintained by the Department originally was collected. As indicated in the April 2007 Strategic Plan report issued by the President's Identity Theft Task Force (page 83) and OMB M–07–16, a routine use to provide for disclosure in connection with response and remedial efforts in the event of a breach of federal data qualifies as a necessary and proper use of information—a use that is in the best interest of both the individual and the public. Such a routine use will serve to protect the interests of the individuals whose information is at issue by allowing the Department to take appropriate steps to facilitate a timely and effective response, thereby improving its ability to prevent, minimize, or remedy any harm resulting from a compromise of data maintained in its systems of records.

Additional editorial and housekeeping changes are also incorporated in the amended prefatory statement. In particular, these changes improve formatting to clarify that separate routine uses apply to potential disclosures to Courts and Contractors, and update references to potential recipients of terrorism-related information to specify the National Counterterrorism Center (instead of its precursor organization, the Terrorist Threat Integration Center) and the Department of Homeland Security.

Any persons interested in commenting on this amendment to the Prefatory Statement of routine uses to Department of State Privacy Act Issuances may do so by submitting comments in writing to Margaret P. Grafeld, Director, Office of Information Programs and Services, A/ISS/IPS, U.S. Department of State, SA–2, Washington, DC 20522–8001.

The new routine use amendment to the Prefatory Statement of Routine Uses to Department of State Privacy Act Issuances will be effective 40 days from the date of publication, unless we receive comments that result in a contrary determination.

The amendment will read as set forth below.

Dated: July 8, 2008.

Rajkumar Chellaraj,

Assistant Secretary for the Bureau of Administration, Department of State.

Department of State

Prefatory Statement of Routine Uses

Law Enforcement

In the event that a system of records maintained by this agency to carry out its functions indicates a violation or potential violation of law, whether civil, criminal or regulatory in nature, and whether arising by general statute or particular program statute, or by regulation, rule or order issued pursuant thereto, the relevant records in the system of records may be referred, as a routine use, to the appropriate agency, whether federal, state, local or foreign, charged with the responsibility of investigating or prosecuting such violation or charged with enforcing or implementing the statute, or rule, regulation or order issued pursuant thereto.

Terrorism and Homeland Security

A record from the Department's systems of records may be disclosed to the Federal Bureau of Investigation, the Department of Homeland Security, the National Counter-Terrorism Center (NCTC), the Terrorist Screening Center (TSC), or other appropriate federal agencies, for the integration and use of such information to protect against terrorism, if that record is about one or more individuals known, or suspected, to be or to have been involved in activities constituting, in preparation for, in aid of, or related to terrorism. Such information may be further disseminated by recipient agencies to Federal, State, local, territorial, tribal, and foreign government authorities, and to support private sector processes as contemplated in Homeland Security Presidential Directive/HSPD–6 and other relevant laws and directives, for terrorist screening, threat-protection and other homeland security purposes.

Disclosure When Requesting Information

A record from this system of records may be disclosed as a ''routine use'' to a federal, state or local agency maintaining civil, criminal or other relevant enforcement information or other pertinent information, such as current licenses, if necessary to obtain information relevant to an agency decision concerning the hiring or retention of an employee, the issuance of a security clearance, the letting of a contract, or the issuance of a license, grant or other benefit.

Disclosure of Requested Information

A record from this system of records may be disclosed to a federal agency, in response to its request, in connection with the hiring or retention of an employee, the issuance of a security clearance, the reporting of an investigation of an employee, the letting of a contract, or the issuance of a license, grant, or other benefit by the requesting agency, to the extent that the information is relevant and necessary to the requesting agency's decision on the matter.

A record from this system of records may be disclosed to a federal, state, local or foreign agency as a routine use response to such an agency's request, where there is reason to believe that an individual has violated the law, whether civil, criminal or regulatory in nature, and whether arising by general statute or particular program statute, or by regulation, rule or order issued pursuant thereto, if necessary, and only to the extent necessary, to enable such agency to discharge its responsibilities of investigating or prosecuting such violation or its responsibilities with enforcing or implementing the statute, or rule, regulation or order issued pursuant thereto.

A record from this system of records may be disclosed to a foreign agency as a routine response to such an agency's

request when the information is necessary for the foreign agency to adjudicate and determine an individual's entitlement to rights and benefits, or obligations owed to the foreign agency, such as information necessary to establish identity or nationality.

Office of Management and Budget

The information contained in this system of records will be disclosed to the Office of Management and Budget in connection with review of private relief legislation, as set forth in OMB Circular No. A–19, at any stage of the legislative coordination and clearance process as set forth in that Circular.

Members of Congress

Disclosure may be made to a congressional office from the record of an individual in response to an inquiry from the Congressional office made at the request of that individual.

Contractors

Information from a system of records may be disclosed to anyone who is under contract to the Department of State to fulfill an agency function but only to the extent necessary to fulfill that function.

Courts

Information from a system of records may be made available to any court of competent jurisdiction, whether Federal, state, local or foreign, when necessary for the litigation and adjudication of a case involving an individual who is the subject of a Departmental record.

National Archives, General Services Administration

A record from a system of records may be disclosed as a routine use to the National Archives and Records Administration and the General Services Administration: For records management inspections, surveys and studies; following transfer to a Federal records center for storage; and to determine whether such records have sufficient historical or other value to warrant accessioning into the National Archives of the United States.

Department of Justice

A record may be disclosed as a routine use to any component of the Department of Justice, including United States Attorneys, for the purpose of representing the Department of State or any officer or employee of the Department of State in pending or potential litigation to which the record is pertinent.

Persons or Entities in Response to an Actual or Suspected Compromise or Breach of Personally Identifiable Information

To appropriate agencies, entities, and persons when (1) the Department of State suspects or has confirmed that the security or confidentiality of information in the system of records has been compromised; (2) the Department has determined that as a result of the suspected or confirmed compromise there is a risk of harm to economic or property interests, identity theft or fraud, or harm to the security or integrity of this system or other systems or programs (whether maintained by the Department or another agency or entity) that rely upon the compromised information; and (3) the disclosure made to such agencies, entities, and persons is reasonably necessary to assist in connection with the Department's efforts to respond to the suspected or confirmed compromise and prevent, minimize, or remedy such harm.

[FR Doc. E8–16159 Filed 7–14–08; 8:45 am]

BILLING CODE 4710–24–P

DEPARTMENT OF STATE

[Public Notice 6289]

Global Financial Management System

SUMMARY: During a review of this agency's operations, a system was identified as being in operation that is not covered by a Privacy Act system of records. Notice is hereby given that the Department of State proposes to create a new system of records, Global Financial Management System, pursuant to the provisions of the Privacy Act of 1974, as amended (5 U.S.C. 552a), and Office of Management and Budget Circular No. A–130, Appendix I. The Department's report relating to this system was filed with the Office of Management and Budget on July 8, 2008.

It is proposed that the new system will be named ''Global Financial Management System.'' It is also proposed that the new system description will identify the Global Financial Management System (GFMS) as the official financial management system for the Department of State to account for and control appropriated resources and to maintain accounting and financial information associated with the normal operation of government organizations. The routine uses applying to GFMS that provide for disclosure to the Department of the Treasury and the Internal Revenue Service are compatible with the purpose for collecting information that resides in this system because such disclosures enable the appropriate reimbursements to individuals and documentation thereof for purposes of tax compliance.

Any persons interested in commenting on the new Global Financial Management System may do so by submitting comments in writing to Margaret P. Grafeld, Director, Office of Information Programs and Services, A/ISS/IPS, U.S. Department of State, SA–2, Washington, DC 20522–8001. The new system of records for the Global Financial Management System will be effective 40 days from the date of publication, unless comments are received that result in a contrary determination. This new system description will read as set forth below.

Dated: July 8, 2008.

Rajkumar Chellaraj,

Assistant Secretary for the Bureau of Administration, Department of State.

STATE–73

SYSTEM NAME:

Global Financial Management System.

SECURITY CLASSIFICATION:

Unclassified.

SYSTEM LOCATION:

Department of State, Annex 1, 2201 C Street, NW., Washington, D.C. 20520; Annex 15, 1800 N. Kent Street, Arlington, VA 22209; Charleston Financial Service Center, Building 646A, 1969 Dyess Avenues, Charleston, SC 29408; and overseas at U.S. Embassies, U.S. Consulates General and Consulates.

CATEGORIES OF INDIVIDUALS COVERED BY THE SYSTEM:

Any individual requiring payment by the Department of State whether for services rendered or for reimbursement of an authorized payment voucher.

AUTHORITY FOR MAINTENANCE OF SYSTEM:

Federal Managers' Financial Integrity Act of 1982, Federal Financial Management Improvement Act of 1996 and the Debt Collection Act of 1982 and 1996.

CATEGORIES OF RECORDS IN THE SYSTEM:

Names, addresses, telephone numbers, social security numbers, tax identification numbers, employee identification numbers, bank routing and account numbers, loan numbers and receivable reference numbers, and related information.

PURPOSE:

The Global Financial Management System (GFMS) is the official financial

management system for the Department of State to account for and control appropriated resources and to maintain accounting and financial information associated with the normal operation of government organizations. The information in this system is used to make authorized payments for goods and services to companies or individuals doing business with the Department of State, to make authorized reimbursement payments to an employee, to prepare 1099 tax reports, and to account for individual accounts of debts owed to the Department of State or the U.S. Government, in accordance with the Debt Collection Improvement Act of 1996.

ROUTINE USES OF RECORDS MAINTAINED IN THE SYSTEM, INCLUDING CATEGORIES OF USERS AND PURPOSES OF SUCH USES:

The principal users of this information outside the Department of State are: (1) Department of Treasury to issue authorized payments to companies and individuals or to issue authorized reimbursement payments to employees; and (2) the Internal Revenue Service and companies or individuals who have received qualifying payments during the tax year as recipients of 1099 reporting. Also see the Department of State's Prefatory Statement of Routine Uses published in the Federal Register.

DISCLOSURE TO CONSUMER REPORTING AGENCIES:

Disclosure made pursuant to 5 U.S.C. 552a(b)(12): Debt information concerning a government claim against an individual may be furnished in accordance with 5 U.S.C. 552a(b)(12) and section 3 of the Debt Collection Act of 1982 (Pub. L. 97–365) to consumer reporting agencies to encourage repayment of an overdue debt.

POLICIES AND PRACTICES FOR STORING, RETRIEVING, ACCESSING, RETAINING AND DISPOSING OF RECORDS IN THE SYSTEM:

STORAGE:

Electronic media and paper records.

RETRIEVABILITY:

By name, employee identification number, or social security number, consistent with Executive Order 9397 and Section 7 of the Privacy Act.

SAFEGUARDS:

All Department of State employees and contractors with authorized access have undergone a thorough background security investigation. Access to the Department and its annexes is controlled by security guards and admission is limited to those individuals possessing a valid identification card or individuals under proper escort. Records containing personal information are maintained in secured file cabinets or in restricted areas, access to which is limited to authorized personnel. Servers are stored in Department of State secured facilities in cipher locked server rooms. Physical access to the server rooms is limited to authorized personnel only. The system is secured with the safeguards required by Office of Management and Budget Memorandum M–07–16 as may be applicable

RETENTION AND DISPOSAL:

Records maintenance and disposal is in accordance with National Archives and Records Administration retention schedule, and any supplemental guidance issued by individual components.

SYSTEM MANAGER AND ADDRESS:

Director, Systems Development and Maintenance, Department of State, P.O. Box 150008, Charleston, SC 29415–5008.

NOTIFICATION PROCEDURE:

Individuals who have reason to believe that the Department of State's Global Financial Management System may have records pertaining to themselves may write the Director, Office of Information Programs and Services, A/ISS/IPS, SA–2, Department of State, 515 22nd Street, NW., Washington, DC 20522–8100.

The individual must specify that he or she wishes the GFMS to be checked. At a minimum, the individual should include: Name, date of birth, current mailing address and zip code, signature; and also a brief description of the circumstances that caused the individual cause to believe that the GFMS has records pertaining to him or her.

RECORD ACCESS AND AMENDMENT PROCEDURES:

Individuals who wish to gain access to or amend records pertaining to them should write to the Director, Office of Information Programs and Services, A/ISS/IPS, SA–2, Department of State, 515 22nd Street, NW., Washington, DC 20522–8100.

RECORD SOURCE CATEGORIES

These records contain information obtained from the individual who is the subject of these records, from Department of State transactions, and from other U.S. Government agencies.

SYSTEM EXEMPTED FROM CERTAIN PROVISIONS OF THE PRIVACY ACT:

None.

[FR Doc. E8–16161 Filed 7–14–08; 8:45 am]

BILLING CODE 4710–24–P

DEPARTMENT OF TRANSPORTATION

Federal Aviation Administration

Notification of Policy Revisions, and Requests for Comments on the Percentage of Fabrication and Assembly that Must Be Completed by an Amateur Builder to Obtain an Experimental Airworthiness Certificate for an Amateur-Built Aircraft

AGENCY: Federal Aviation Administration (FAA), DOT.

SUMMARY: This notice announces revisions to (1) Chapter 4, Special Airworthiness Certification, Section 9 of the FAA Order 8130.2F, *Airworthiness Certification of Aircraft and Related Products*, (2) Advisory Circular (AC) 20–27G, *Certification and Operation of Amateur-Built Aircraft* (AC 20–27G is the result of combining AC 20–27F and AC 20–139, *Commercial Assistance During Construction of Amateur-Built Aircraft)*, and (3), requests comments on the percentage of fabrication and assembly that must be completed by an amateur builder to obtain an experimental airworthiness certificate for an amateur-built aircraft. This action is being taken because the FAA has determined that the existing Order and ACs do not adequately state the required levels of fabrication/assembly or guidance on use of commercial assistance. As a result, the existing Order and Advisory Circulars require revision. The FAA is seeking comments on these revisions.

FOR FURTHER INFORMATION CONTACT: Frank Paskiewicz, Manager, Production and Airworthiness Division, AIR–200, Federal Aviation Administration, 800 Independence Ave., SW., Washington, DC 20591; telephone number: (202) 267–8361.

SUPPLEMENTARY INFORMATION:

Background

The FAA established an Amateur-Built Aviation Rulemaking Committee (ARC) in July, 2006. The ARC, made up of representatives from the FAA, aircraft kit manufacturers, commercial assistance center owners and associations, was asked to make recommendations regarding the use of builder or commercial assistance when fabricating and assembling amateur-built aircraft intended for certification under Title 14 Code of Federal Regulations (14 CFR) part 21.191(g). The committee concluded that the existing procedures used for evaluation of aircraft kits are inadequate, need updating, and are not used in a standardized manner.

On February 15, 2008, the FAA published a notice in the **Federal Register** (73 FR 8926), which temporarily suspended amateur-built aircraft kit evaluations. The FAA concluded that a temporary suspension of kit evaluation was necessary because the existing FAA Order and Advisory Circulars used to evaluate these kits has resulted in inconsistent determinations regarding regulatory compliance.

As a result of the ARC findings, the FAA proposes to revise Chapter 4, Special Airworthiness Certification, Section 9, of FAA Order 8130.2F and combine AC 20–27G and AC 20–139 used in amateur-built aircraft kit evaluations.

The FAA believes that new guidance is necessary to ensure that an amateur builder completes the necessary amount of fabrication and assembly (the major portion) of an aircraft to be in compliance with § 21.191(g). A determination of major portion is made by evaluating the amount of work accomplished by the amateur builder(s) against the total amount of work necessary to complete the aircraft. The major portion of the aircraft is defined as more than 50 percent of the fabrication and assembly tasks.

The FAA most recently addressed fabrication and assembly in an FAA internal directive, FAA Order 8130.2B, dated October 20, 1987, which stated in pertinent part, ''* * * the 'major portion' of the aircraft is considered to mean more than 50 percent of the fabrication and more than 50 percent of the assembly.'' Editorial changes in subsequent revisions inadvertently shortened this statement to ''more than 50 percent of the fabrication and assembly operations.'' This had the unintended consequence of not specifying a minimum amount of fabrication and assembly as intended by the regulation.

In the last 25 to 30 years there has been significant deviation from this intent as a result of increasing sophistication of designs and materials as well as advances in kit manufacturing processes. In some cases the FAA has found that, depending upon the aircraft design, the amateur builder only fabricates 10 to 20 percent of an aircraft, and assembles 80 to 90 percent. The trend by kit manufacturers for more assembly and less fabrication results in work for the amateur builder that primarily consists of assembly of prepared parts. This is contrary to the intent of § 21.191(g).

To ensure consistency and standardization concerning amateur-built kit aircraft evaluations, the FAA proposes to clarify how much fabrication and assembly must be performed by the amateur builder. The FAA is proposing that an amateur builder fabricate a minimum of 20 percent of an aircraft and assemble a minimum of 20 percent of the aircraft. The FAA also clarifies the role of commercial assistance, which includes both the pre-fabrication of parts and direct assistance to the builder, as part of the remaining 49 percent (manufacturer and commercial assistance). The figure below illustrates this clarification.

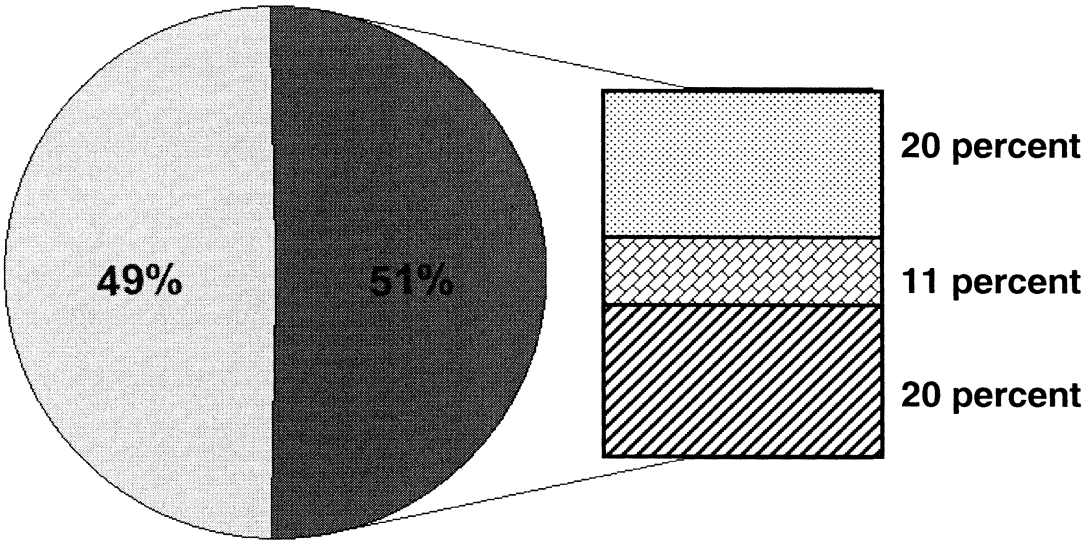

Kit and commercial assistance combined must not exceed 49 percent.

Of the 51 percent, the amateur builder must do at least 20 percent of the fabrication.

Required level of fabrication (20 percent minimum)

Remaining 11 percent is adjustable as fabrication or assembly

Required level of assembly (20 percent minimum)

A stated level of builder fabrication is necessary for the FAA to issue the amateur builder a repairman certificate after showing compliance with § 65.104. Among other requirements, that section requires the experimental aircraft builder to be the primary builder of the aircraft, and to show to the satisfaction of the Administrator that the individual has the requisite skill to determine whether the aircraft is in a condition for safe operations.

The FAA is seeking comments on the proposed minimum percentage of fabrication and assembly that would be required in order for an amateur-built aircraft to qualify for a special airworthiness certificate in the experimental category. In addition, the FAA seeks comments to Chapter 4, Special Airworthiness Certification, Section 9, of FAA Order 8130.2F, *Airworthiness Certification of Aircraft and Related Products*, and AC 20–27G, *Certification and Operation of Amateur-Built Aircraft*. Both of these documents are available at *http://www.faa.gov*. Paper copies of these documents may be obtained by writing to Frank Paskiewicz, Manager, Production and Airworthiness Division, AIR–200, Federal Aviation Administration, 800 Independence Ave., SW., Washington, DC 20591.

Issued in Washington, DC on July 9, 2008.

Frank Paskiewicz,

Manager, Production and Airworthiness Division.

[FR Doc. E8–16093 Filed 7–14–08; 8:45 am]

BILLING CODE 4910–13–P

DEPARTMENT OF TRANSPORTATION

Federal Railroad Administration

Notification of Petition for Approval; Railroad Safety Program Plan

Although not required, the Federal Railroad Administration (FRA) is providing notice that it has received a petition for approval of a Railroad Safety Program Plan (RSPP) submitted pursuant to Title 49 Code of Federal Regulations (CFR) Part 236, Subpart H. The petition is listed below, including the party seeking approval, and the requisite docket number. FRA is not accepting comments on this RSPP.

Northeast Illinois Regional Commuter Railroad Corporation

[Docket Number FRA–2008–0072]

The Northeast Illinois Regional Commuter Railroad Corporation (METRA) submitted a petition for approval of an RSPP. The petition, the RSPP, and any related documents have been placed in the requisite docket (FRA–2008–0072) and are available for public inspection.

Interested parties are invited to review the RSPP and associated documents at the DOT Docket Management Facility during regular business hours (9 a.m.–5 p.m.) at 1200 New Jersey Avenue, SE., Room W12–140, Washington, DC 20590. All documents in the public docket are also available for inspection and copying on the internet at *http://www.regulations.gov.*

Anyone is able to search the electronic form of any written communications received into any of our dockets by name of the individual submitting the document (or signing the document, if submitted on behalf of an association, business, labor union, etc.). You may review the DOT's complete Privacy Act Statement in the **Federal Register** published on April 11, 2000 (Volume 65, Number 70; Pages 19477–78).

Issued in Washington, DC on July 9, 2008.

Grady C. Cothen, Jr.,

Deputy Associate Administrator for Safety Standards and Program Development.

[FR Doc. E8–16133 Filed 7–14–08; 8:45 am]

BILLING CODE 4910–06–P

DEPARTMENT OF TRANSPORTATION

Federal Railroad Administration

Petition for Waiver of Compliance

In accordance with Part 211 of Title 49 Code of Federal Regulations (CFR), notice is hereby given that the Federal Railroad Administration (FRA) has received a request for a waiver of compliance with certain requirements of its safety standards. The individual petition is described below, including the party seeking relief, the regulatory provisions involved, the nature of the relief being requested, and the petitioner's arguments in favor of relief.

Memphis Area Transit Authority

[Waiver Petition Docket Number FRA–2008–0063]

The Memphis Area Transit Authority (MATA) seeks a permanent waiver of compliance from sections of Title 49 of the CFR for operation of its vintage Main Street Trolley line, which features ''limited connections'' such as a shared corridor operation and a diamond at-grade rail crossing of Canadian National/Illinois Central Railroad (CN/IC) track by the streetcar. *See Statement of Agency Policy Concerning Jurisdiction Over the Safety of Railroad Passenger Operations and Waivers Related to Shared Use of the Tracks of the General Railroad System by Light Rail and Conventional Equipment, 65 FR 42529 (July 10, 2000). See also Joint Statement of Agency Policy Concerning Shared Use of the Tracks of the General Railroad System by Conventional Railroads and Light Rail Transit Systems, 65 FR 42626 (July 10, 2000).*

The Main Street Trolley line is a 7 mile long, urban transit system serving 35 stations, and partially shares a riverfront corridor with CN/IC. Along this shared corridor, there are 11 shared highway-rail at grade crossings and one diamond at-grade rail crossing in which the streetcar crosses the CN/IC north of Auction Avenue as it heads south to GE Patterson Avenue. All shared highway rail at grade crossings have signalized crossing protection. Also, the diamond at-grade rail crossing is fully interlocked and signaled. All maintenance is performed by CN/IC.

MATA's Main Street Trolley line shares a limited connection to the general freight system at 11 highway-rail at grade crossings and 1 diamond at-grade rail crossing, and seeks a permanent waiver of compliance from Title 49 of the CFR, specifically: *Part 210 Noise Emissions; Part 215 Freight Car Safety Standards; Part 218 Railroad Operating Practices; Part 219 Drug and Alcohol; Part 221 Rear End Marking Devices; Part 223 Safety Glazing Standards; Part 228 Hours of Service* (for MATA streetcar operators and dispatchers); *Part 229 Locomotive Safety Standards; Part 231 Railroad Safety Appliances; Part 238 Passenger Equipment Safety Standards; Part 239 Passenger Emergency Preparedness;* and *Part 240 Engineer Certification.*

Interested parties are invited to participate in these proceedings by submitting written views, data, or comments. FRA does not anticipate scheduling a public hearing in connection with these proceedings since the facts do not appear to warrant a hearing. If any interested party desires an opportunity for oral comment, they should notify FRA, in writing, before the end of the comment period and specify the basis for their request.

All communications concerning these proceedings should identify the appropriate docket number (e.g., Waiver Petition Docket Number FRA–2008–0063) and may be submitted by any of the following methods:

- *Web site: http://www.regulations.gov.* Follow the online instructions for submitting comments.
- *Fax:* 202–493–2251.
- *Mail:* Docket Operations Facility, U.S. Department of Transportation, 1200

New Jersey Avenue, SE., W12–140, Washington, DC 20590.

• *Hand Delivery:* 1200 New Jersey Avenue, SE., Room W12–140, Washington, DC 20590, between 9 a.m. and 5 p.m., Monday through Friday, except Federal holidays.

Communications received within 45 days of the date of this notice will be considered by FRA before final action is taken. Comments received after that date will be considered as far as practicable. All written communications concerning these proceedings are available for examination during regular business hours (9 a.m.—5 p.m.) at the above facility. All documents in the public docket are also available for inspection and copying on the Internet at the docket facility's Web site at *http://www.regulations.gov.*

Anyone is able to search the electronic form of any written communications and comments received into any of our dockets by the name of the individual submitting the comment (or signing the comment, if submitted on behalf of an association, business, labor union, etc.). You may review DOT's complete Privacy Act Statement in the **Federal Register** published on April 11, 2000 (Volume 65, Number 70; Pages 19477–78).

Issued in Washington, DC, on July 9, 2008.

Grady C. Cothen, Jr.,

Deputy Associate Administrator for Safety Standards and Program Development.

[FR Doc. E8–16130 Filed 7–14–08; 8:45 am]

BILLING CODE 4910–06–P

DEPARTMENT OF TRANSPORTATION

Federal Railroad Administration

Petition for Waiver of Compliance

In accordance with Part 211 of Title 49 Code of Federal Regulations (CFR), notice is hereby given that the Federal Railroad Administration (FRA) received a request for a waiver of compliance with certain requirements of its safety standards. The individual petition is described below, including the party seeking relief, the regulatory provisions involved, the nature of the relief being requested, and the petitioner's arguments in favor of relief.

Canadian National Railway Company

[Waiver Petition Docket Number FRA–2008–0060]

The Canadian National Railway Company (CN), a Class I railroad, on its own behalf and for its wholly-owned United States operating subsidiaries, seeks a waiver of compliance from certain provisions of Title 49 CFR Part 232—*Brake System Safety Standards.* Specifically, CN has petitioned FRA for a clarification of Part 232.103 (n)(1) *Securement of unattended equipment* to allow a railroad to determine that zero is a sufficient number of hand brakes to secure equipment under the regulation when the railroad decides that the yard location is effectively leveled in the area where the cars are staged. Alternately, CN requests a waiver from the requirement of Part 232.103 (n)(1) *Securement of unattended equipment* to allow CN to apply no handbrakes to hold the equipment at these specified locations:

1. Battle Creek Yard, Battle Creek, MI;
2. Destrehan Yard, Destrehan, LA;
3. Flat Rock Yard, Flat Rock, MI
4. Glenn Yard, Forest View, IL;
5. Green Bay Yard, Green Bay, WI;
6. Hawthorne Yard, Cicero, IL;
7. Mays Yard, New Orleans, LA;
8. Neenah Yard, Neenah, WI;
9. Pokegama Yard, Pokegama, WI; and
10. Stevens Point Yard, Stevens Point, WI.

CN has identified these locations as yards which are virtually leveled, or where the ends of the yard are ''bowl'' shaped to contain rolling equipment, and where CN maintains that equipment may be safely left unattended without hand brakes applied.

Under CN's previous interpretation of Part 232.103 (n)(1), CN states that they previously safely operated over the past number of years at several of these locations with a zero hand brake applied policy. CN has suspended that policy pending the outcome of this petition. CN states that under its previous policy, they experienced no unintended equipment roll-outs at these locations, which they attributed to the flat or ''bowl'' shaped configuration of these yards. CN also states that safety and efficiency of operation were improved, due to reduction of employee exposure to injury while applying or releasing handbrakes, and that wheel damage caused by the failure of a crew to release hand brakes before equipment movement was reduced.

Interested parties are invited to participate in these proceedings by submitting written views, data, or comments. FRA does not anticipate scheduling a public hearing in connection with these proceedings since the facts do not appear to warrant a hearing. If any interested party desires an opportunity for oral comment, they should notify FRA, in writing, before the end of the comment period and specify the basis for their request.

All communications concerning these proceedings should identify the appropriate docket number (e.g., Waiver Petition Docket Number FRA–2008–0060) and may be submitted by any of the following methods:

• Web site: *http://www.regulations.gov.* Follow the online instructions for submitting comments.

• *Fax:* 202–493–2251.

• *Mail:* Docket Operations Facility, U.S. Department of Transportation, 1200 New Jersey Avenue, SE., W12–140, Washington, DC 20590.

• *Hand Delivery:* 1200 New Jersey Avenue, SE., Room W12–140, Washington, DC 20590, between 9 a.m. and 5 p.m., Monday through Friday, except Federal Holidays.

Communications received within 45 days of the date of this notice will be considered by FRA before final action is taken. Comments received after that date will be considered as far as practicable. All written communications concerning these proceedings are available for examination during regular business hours (9 a.m.–5 p.m.) at the above facility. All documents in the public docket are also available for inspection and copying on the Internet at the docket facility's Web site at *http://www.regulations.gov.*

Anyone is able to search the electronic form of any written communications and comments received into any of our dockets by the name of the individual submitting the comment (or signing the comment, if submitted on behalf of an association, business, labor union, etc.). You may review DOT's complete Privacy Act Statement in the **Federal Register** published on April 11, 2000 (Volume 65, Number 70; Pages 19477–78).

Issued in Washington, DC on July 9, 2008.

Grady C. Cothen, Jr.,

Deputy Associate Administrator for Safety Standards and Program Development.

[FR Doc. E8–16131 Filed 7–14–08; 8:45 am]

BILLING CODE 4910–06–P

Corrections

Federal Register

Vol. 73, No. 136

Tuesday, July 15, 2008

This section of the FEDERAL REGISTER contains editorial corrections of previously published Presidential, Rule, Proposed Rule, and Notice documents. These corrections are prepared by the Office of the Federal Register. Agency prepared corrections are issued as signed documents and appear in the appropriate document categories elsewhere in the issue.

DEPARTMENT OF HOUSING AND URBAN DEVELOPMENT

Office of Federal Housing Enterprise Oversight

12 CFR Part 1750

RIN 2550–AA38

Risk-Based Capital Regulation—Loss Severity Amendments

Correction

In rule document E8–13378 beginning on page 35893 in the issue of Wednesday, June 25, 2008 make the following corrections:

1. On page 35893, in the third column, the last paragraph and its accompanying footnotes should read as follows:

Title XIII of the Housing and Community Development Act of 1992, Public Law 102–550, titled the Federal Housing Enterprises Financial Safety and Soundness Act of 1992 (Act) (12 U.S.C. 4501 *et seq.*), established OFHEO as an independent office within the Department of Housing and Urban Development to ensure that Fannie Mae and Freddie Mac (collectively the Enterprises) are adequately capitalized, operate safely and soundly, and comply with applicable laws, rules and regulations. The Act provides that the Director of OFHEO (Director) is authorized to make such determinations and take such actions as the Director determines necessary with respect to the issuance of regulations regarding, among other things, the required capital levels for the Enterprises.[1] The Act further provides that the Director shall issue regulations establishing the risk-based capital test (Risk-Based Capital Regulation) and that the Risk-Based Capital Regulation, subject to certain confidentiality provisions, shall be sufficiently specific to permit an individual other than the Director to apply the risk-based capital test in the same manner as the Director.[2]

[1] 12 U.S.C. 4513(a), (b)(1), (b)(3).

[2] 12 U.S.C. 1361(e)(1), (e)(3).

2. On page 35894, in the first column, the first full paragraph and its accompanying footnotes should read as follows:

Pursuant to the Act, OFHEO published a final regulation setting forth a risk-based capital test which forms the basis for determining the risk-based capital requirement for each Enterprise.[3] The Risk-Based Capital Regulation has been amended to incorporate corrective and technical amendments that enhance the transparency sensitivity to risk and accuracy of the calculation of the risk-based capital requirement.[4]

[3] Risk-Based Capital, 66 FR 47730 (September 13, 2001), 12 CFR part 1750.

[4] Risk-Based Capital, 66 FR 47730 (September 13, 2001), 12 CFR part 1750, as amended, 67 FR 11850 (March 15, 2002), 67 FR 19321 (April 19, 2002), 67 FR 66533 (November 1, 2002), 68 FR 7309 (February 13, 2003), 71 FR 75085 (December 14, 2006).

3. On the same page, in the second column, the first full paragraph and its accompanying footnote should read as follows:

Consistent with the Act and OFHEO's commitment to review, update and enhance the Risk-Based Capital Regulation in order to ensure an accurate risk sensitive and transparent calculation of the risk-based capital requirement, OFHEO published a notice of proposed rulemaking (NPRM) to incorporate amendments to the Risk-Based Capital Regulation.[5] Specifically, OFHEO proposed two changes to the Risk-Based Capital Regulation. The first change was proposed because certain loss severity equations resulted in the Enterprises recording profits instead of losses on foreclosed mortgages during the calculation of the risk-based capital requirement. The current loss severity equations overestimate Enterprise recoveries for defaulted government guaranteed and low loan-to-value loans. The results generated by the current loss severity equations are not consistent with the Risk-Based Capital Regulation and result in significant reductions in the risk-based capital requirements for the Enterprises. The second change relates to the treatment of Federal Housing Administration insurance associated with single-family loans with a loan-to-value ratio below 78%. OFHEO proposed changes related to these loans that would make the Risk-Based Capital Regulation consistent with current law.

[5] Risk-Based Capital-Loss Severity Amendments, 72 FR 68656 (December 5, 2007).

[FR Doc. Z8–13378 Filed 7–14–08; 8:45 am]

BILLING CODE 1505–01–D

Federal Register

Tuesday,
July 15, 2008

Part II

Department of Commerce

National Oceanic and Atmospheric Administration

50 CFR Parts 600 and 635

Atlantic Highly Migratory Species (HMS); Atlantic Shark Management Measures; Final Rule; Republication

DEPARTMENT OF COMMERCE

National Oceanic and Atmospheric Administration

50 CFR Parts 600 and 635

[Docket No. 0612242866–8619–02]

RIN 0648–AU89

Atlantic Highly Migratory Species (HMS); Atlantic Shark Management Measures; Republication

Editorial Note: Federal Register rule document E8–13961, originally published at pages 35778 to 35833 in the issue of Tuesday, June 24, 2008, included several pages of duplicated text and deleted material. This document is being republished in its entirety.

AGENCY: National Marine Fisheries Service (NMFS), National Oceanic and Atmospheric Administration (NOAA), Commerce.

ACTION: Final rule; fishing season notification.

SUMMARY: This final rule implements the management measures described in Final Amendment 2 to the Atlantic HMS Fishery Management Plan (FMP). These management measures are designed to rebuild overfished species and prevent overfishing of Atlantic sharks. These measures include, but are not limited to, reductions in the commercial quotas, adjustments to commercial retention limits, establishment of a shark research fishery, a requirement for commercial vessels to maintain all fins on the shark carcasses through offloading, the establishment of two regional quotas for non-sandbar large coastal sharks (LCS), the establishment of one annual season for commercial shark fishing instead of trimesters, changes in reporting requirements for dealers (including swordfish and tuna dealers), the establishment of additional time/area closures for bottom longline (BLL) fisheries, and changes to the authorized species for recreational fisheries. This rule also establishes the 2008 commercial quota for all Atlantic shark species groups. These changes affect all commercial and recreational shark fishermen and shark dealers on the Atlantic Coast.

DATES: This rule is effective on July 24, 2008.

ADDRESSES: For copies of Final Amendment 2 to the Highly Migratory Species Fishery Management Plan, the Small Entity Compliance Guide, or other related documents, please write to the Highly Migratory Species Management Division, 1315 East-West Highway, Silver Spring, MD 20910, or call at (301) 713–2347 or fax to (301)713–1917. Copies are also available on the HMS website at *http://www.nmfs.noaa.gov/sfa/hms/*.

Written comments regarding the burden-hour estimates or other aspects of the collection-of-information requirements contained in this final rule may be submitted to the Highly Migratory Species Management Division at (301) 713–2347 or by fax to (301) 713–1917 and by e-mail to *David__Rostker@omb.eop.gov* or fax to (202) 395–7285.

FOR FURTHER INFORMATION CONTACT: Michael Clark, Karyl Brewster-Geisz, or LeAnn Southward Hogan at 301–713–2347 or by fax at 301–713–1917; or Jackie Wilson at 240–338–3936.

SUPPLEMENTARY INFORMATION:

Background

The Atlantic shark fisheries are managed under the authority of the Magnuson-Stevens Fishery Conservation and Management Act (Magnuson-Stevens Act). The Consolidated HMS FMP is implemented by regulations at 50 CFR part 635.

NMFS announced its intent to prepare an environmental impact statement (EIS) on November 7, 2006 (71 FR 65086), and held seven scoping meetings in January 2007 (72 FR 123, January 3, 2007). As described in the notice of intent, based on the results of the 2005 Canadian porbeagle shark stock assessment, the 2006 dusky shark stock assessment, and the 2005/2006 LCS stock assessment, NMFS declared the current status of the LCS complex as unknown, sandbar sharks as overfished with overfishing occurring, the Gulf of Mexico blacktip shark population as not overfished with overfishing not occurring, the Atlantic blacktip shark population as unknown, the dusky shark as overfished with overfishing occurring, and porbeagle sharks as overfished with overfishing not occurring. Where there are overfished/overfishing determinations, under the Magnuson-Stevens Act, NMFS is required to develop management measures to rebuild overfished shark stocks and prevent overfishing.

In March 2007, NMFS presented a predraft of the Amendment 2 to the HMS Advisory Panel (72 FR 7860, February 21, 2007). Based in part on the comments received during scoping and from the HMS Advisory Panel, on July 27, 2007, NMFS developed further and then released the draft Amendment 2 to the Consolidated HMS FMP and the associated proposed rule (72 FR 41325; 72 FR 41392). The public comment period was originally scheduled to end on October 10, 2007; however, it was subsequently extended (72 FR 56330, October 3, 2007) and reopened until December 17, 2007 (72 FR 64186, November 15, 2007), to provide the Regional Fishery Management Councils, the Interstate Marine Fisheries Commissions, and the public additional opportunity to submit comments. In addition to the written comments submitted, the public verbally commented on the proposed rule at five Regional Fishery Management Council meetings (New England, Mid-Atlantic, South Atlantic, Gulf of Mexico, and Caribbean), an Atlantic States Marine Fisheries Commission meeting, ten public hearings, and one HMS Advisory Panel meeting. The summary of the comments received and NMFS' responses are provided below. Based on these public comments, NMFS re-evaluated the preferred alternatives identified in the draft Amendment 2, made changes as outlined in Final Amendment 2, and now releases its final rule as modified after considering public comment.

Consistent with the Consolidated HMS FMP objectives, the Magnuson-Stevens Act, and other applicable law, the objectives for this final rule are to: (1) implement rebuilding plans for sandbar, dusky, and porbeagle sharks; (2) provide an opportunity for the sustainable harvest of blacktip and other sharks, as appropriate; (3) prevent overfishing of Atlantic sharks; (4) analyze BLL time/area closures and take necessary action to maintain or modify the closures, as appropriate; and (5) improve, to the extent practicable, data collections or data collection programs.

The rebuilding plans in Final Amendment 2 to the Consolidated HMS FMP considers the recommendations in the stock assessments to be the best available scientific information on the status of the species and therefore, reflects those recommendations. This includes NMFS establishing rebuilding time periods that are as short as possible, taking into account the status and biology of the stocks and needs of the fishing communities according to National Standard (NS) 1 guidelines.

The 2005/2006 stock assessment for the sandbar shark assumed that sandbar shark fishing mortality from 2005 to 2007 would be maintained at levels similar to 2004 (the last year of data used in the stock assessment was from 2004) and that there would be a constant total allowable catch (TAC) between 2008 and 2070. Using these assumptions, the projections indicated that sandbar sharks would have a 70–percent probability of rebuilding by 2070 with a TAC of 220 mt whole

weight (ww) (158 mt dressed weight (dw))/year and a 50–percent probability of rebuilding by 2070 with a TAC of 240 mt ww (172 mt dw)/year. As described in Amendment 2, NMFS used the 70–percent probability of rebuilding to ensure that the intended results of a management action are actually realized given the life history traits of sandbar sharks.

Under the rebuilding plan, sandbar sharks are separated from the LCS complex, and the base commercial sandbar shark quota is established at 116.6 mt dw/year, which results in a total sandbar shark TAC of 158.3 mt dw (220 mt ww) once other sources of sandbar sharks mortality are included. For the first five years of this rebuilding plan (through 2012), to account for 2007 overharvests, the base commercial quota is reduced to 87.9 mt dw. The adjusted base quota through 2012 includes the amount of quota that would have been available in the 1st season of 2008 had NMFS not closed the fishery during that time. In the final rule for the 1st season of 2008, NMFS calculated that 78 mt dw (171,959 lb dw) would have been available (November 29, 2007, 72 FR 67580). However, based on updates to the reported landings, NMFS adjusted the 78 mt dw estimate down to 66.2 mt dw (145,944 lb dw). The actual commercial quota available in any particular year may fluctuate based on overharvests and will be published via appropriate rulemaking in the **Federal Register**.

Projections in the dusky shark stock assessment indicated that with the age-structured production model (i.e., baseline scenario), dusky sharks could be rebuilt with a 70–percent probability by the year 2400. Other projections from the three other modeling approaches indicate that rebuilding of dusky sharks will take between 100–400 years. As such, in this final rule, NMFS assumes that the rebuilding timeframe that would be as short as possible for dusky sharks would be at least 100 years. The harvest of dusky sharks has been prohibited since 2000. Despite this fact, dusky sharks are still overfished with overfishing occurring. NMFS believes this is at least partly due to the fact that they are caught as bycatch, predominantly in longline fisheries. Many of the final actions in this rule, such as establishing a shark research fishery with 100 percent observer coverage and decreasing the retention limits of non-sandbar large coastal sharks on all fishing vessels, should reduce dusky shark bycatch. This reduction in bycatch should aid in rebuilding and in collecting additional information to evaluate dusky shark status and catches. In the research fishery, if dusky shark catch is high by a particular vessel or in a particular region, NMFS could stop that vessel's trip(s) or stop all research trips in that region and/or time. Additionally, if NMFS decides, after reviewing the data from a particular year, NMFS decides that the catch was too high in the research fishery, NMFS could adjust the research protocols and reduce effort or modify gear requirements, as needed. For the non-research fishery trips, NMFS could either reduce the retention limit in an attempt to reduce effort or work with the appropriate Regional Fishery Management Council to reduce bycatch mortality in certain fisheries, or consider other measures, as appropriate.

A stock assessment was conducted for North Atlantic porbeagle sharks in 2005 by the Canadian Department of Fisheries and Oceans. This assessment was reviewed by NMFS scientists who determined it used appropriate methodologies and all available fishery and biological data including U.S. landings and research. As a result of this review, NMFS determined that the assessment constituted the best available science. NMFS also determined that because the stock assessed is a unit stock that extends into U.S. waters, the assessment and its recommendations were appropriate for use in U.S. domestic management. The assessment recommended that there is a 70–percent probability of rebuilding in 100 years if fishing mortality levels are maintained at or below 0.04 (current fishing mortality level). Considering this science, NMFS believes that the rebuilding timeframe that is as short as possible is 100 years, which will allow a TAC of 11.3 mt dw based on current commercial landings of 1.7 mt dw, current commercial discards of 9.5 mt dw, and current recreational landings of 0.1 mt dw. This results in a commercial porbeagle shark quota of 1.7 mt dw.

This final rule does not contain detailed information regarding the management history of Atlantic sharks or the alternatives considered. Those issues are discussed in the preamble of the proposed rule. Additional information can also be found in the Final Amendment 2 to the Consolidated HMS FMP available from NMFS (see **ADDRESSES**). This final rule contains responses to comments received during the public comment period and a description of changes to the rule between proposed and final. The description of the changes to the proposed rule can be found after the response to comment section.

Response to Comments

A large number of individuals and groups provided both written and verbal comments on the proposed rule during the 143-day comment period, 10 public hearings, 5 Regional Fishery Management Council meetings, one Interstate Marine Fisheries Commission meeting, and one HMS Advisory Panel meeting. These comments resulted in numerous changes. The comments are summarized below together with NMFS' responses. All of the comments are grouped together by major issue. There are 16 major issues: Quotas/Species Complexes; Porbeagle Sharks as Prohibited; Retention Limits; Fins on Requirement; Time Area Closures; Reporting; Seasons; Regions; Recreational Measures; Stock Assessment and Fishery Evaluation (SAFE) Report and Stock Assessment Frequency; Research Fishery/Preferred Alternative; Comments on Other Alternative Suites and Management Measures; Science; National Standards; Economic Impacts; and Miscellaneous. The comments are numbered consecutively, starting with 1, at the beginning of each issue.

1. Quotas/Species Complexes

a. Quotas

Comment 1: The National Marine Fisheries Service (NMFS) should consider reducing the fishing mortality for overfished sandbar sharks.

Response: NMFS is taking steps to reduce fishing mortality for overfished sandbar sharks. In particular, NMFS is reducing the base commercial quota for sandbar sharks to 116.6 mt dw. This amount is further reduced to 87.9 mt dw from 2008 through 2012 to account for 2007 overharvests. This is more than an 80–percent reduction in sandbar shark landings compared to the status quo (594.4 mt dw). This base commercial quota of 116.6 mt dw (which is then adjusted for overharvest) combined with estimated discards both within and outside the commercial shark fishery (e.g., including other commercial fisheries and recreational fisheries) is anticipated to keep sandbar mortality below the recommended total allowable catch (TAC) of 158.3 mt dw, which gives this stock a 70–percent probability of rebuilding by 2070, as described in Chapter one of Amendment 2 to the Consolidated HMS FMP.

Comment 2: NMFS should have considered Individual Transferable Quotas (ITQs) for the shark fishery in this rulemaking. The quota is just too small for the number of participants. Individual Fishing Quotas (IFQs) or ITQs would accomplish the same

objectives as the research fishery. ITQs/IFQs are the fairest, simplest, most rational method for this dilemma. NMFS should switch to an ITQ system with no trip limit, because a lot of times fishermen do not weigh the sharks. Rather, fishermen know their legal trip limit based on how they fill their fish boxes. An ITQ system with no trip limit would result in fewer dead discards.

Response: ITQs may be beneficial in many fisheries, and NMFS may consider developing an IFQ or Limited Access Privilege Programs (LAPPs) for sharks as well as other HMS in the future. NMFS did not consider ITQs to be a reasonable alternative for this rulemaking given the strict 1-year timeline to which NMFS must adhere in setting up a system for rebuilding a fishery under the Magnuson-Stevens Act. Furthermore, overfishing of sharks would have continued during an extensive ITQ development phase, which would have been inconsistent with NMFS' mandate in section 304(e) of the Magnuson-Stevens Act to rebuild overfished stocks. The Magnuson-Stevens Act states that for stocks identified as overfished or having overfishing occurring, the Secretary of Commerce or the relevant Council, as appropriate, shall prepare a fishery management plan, plan amendment, or proposed regulations for the fishery to end overfishing in the fishery and rebuild affected stocks within one year of that determination. NMFS satisfied that timing provision: sandbar sharks and dusky sharks were determined to be overfished with overfishing occurring on November 7, 2006 (71 FR 65086), and NMFS published Draft Amendment 2 to the Consolidated HMS FMP on July 27, 2007 (72 FR 41325). NMFS notes that the 2006 Magnuson-Stevens Fishery Conservation and Management Reauthorization Act amended section 304(e) to include a two-year timing provision for preparation and implementation of actions, and the new provision will be effective July 12, 2009.

Given section 304 and other timing considerations for this action, NMFS did not consider an ITQ system as a reasonable alternative, as it takes several years to properly design an ITQ system that appropriately considers the views of all stakeholders and then to implement such a system. The general requirements for ITQs or LAPPs were included in the 2007 reauthorized Magnuson-Stevens Act (section 303A). Overall, two basic things must be done when implementing a LAPP system: 1) determine who would receive and who can hold the harvest privileges; and 2) define the nature of the harvest privileges. In addition, NMFS is currently establishing referenda requirements for LAPPs (for instance, a particular allocation scheme must be approved by a given level of the industry). In addition, unlike the research fishery, which would allow an individual fisherman to target sharks on a yearly basis, allocation under an ITQ, IFQ, or LAPP would be for a much longer time period. Because fishermen would have these allocations for a long time, NMFS traditionally works extensively with all stakeholders to devise the best allocation scheme possible for these type of permit programs through workshops and other meetings.

Comment 3: NMFS should reconsider how it calculated the non-sandbar Large Coastal Shark (LCS) quota. The non-sandbar LCS quota is low because fishermen were not targeting non-sandbar LCS in the past. They were targeting sandbar sharks. If fishermen had been targeting non-sandbar LCS, historical landings would be much higher, and there would be a larger non-sandbar LCS quota than is currently proposed.

Response: NMFS is implementing a larger non-sandbar LCS base quota of 627.8 mt dw outside the shark research fishery based on dealer reports rather than logbooks, as originally proposed. By using dealer reports, NMFS included in its calculations landings outside of NMFS' jurisdiction (e.g., state landings) and thus maintained consistency in establishing the quota with data used in the stock assessments.

In using historical landings reported by shark dealers to calculate the non-sandbar LCS quota, NMFS follows the recommendations of the stock assessments for Gulf of Mexico and Atlantic blacktip shark populations. These stock assessments recommended keeping catch levels the same in the Atlantic region and not increasing catch levels in the Gulf of Mexico region. Basing quotas on dealer reports would cap fishing effort at historical levels and keep stocks in the Gulf of Mexico healthy and stocks in the Atlantic from declining. Setting quotas higher than these levels could have detrimental effects on shark stocks.

Comment 4: NMFS should consider allocating the entire sandbar quota to fishermen participating in the research fishery because giving a few sandbar sharks to those outside of the research fishery would not be worth it. NMFS should also consider only allowing fishermen with directed shark permits to participate in the shark fishery.

Response: NMFS considered the option discussed in the comment. Under the final action, NMFS is allocating the entire 87.9 mt dw adjusted sandbar quota to the shark research fishery. NMFS will publish a **Federal Register** notice each year, inviting applications from permit holders who are willing to participate in the shark research fishery. Within that notice, NMFS will publish the selection criteria that NMFS would use to select participants for the research fishery. For example, depending on the research objectives for a given year, NMFS may consider applications from a variety of permit holders, including directed, incidental, and charter/headboat (CHB) permit holders, for participation in the shark research fishery.

Comment 5: NMFS should acknowledge that the proposed reduction in quotas is the end of the directed shark fishery. NMFS should ensure that sharks are not discarded and accommodate incidental landings whenever possible.

Response: The final actions will likely end the directed shark fishery for certain species. With the reductions in the sandbar quota, the reduction in retention limits, and the prohibition on retaining sandbar sharks outside the research fishery, fishermen with directed shark permits will likely no longer target LCS outside of the research fishery. As described above, these modifications to quotas and retention limits are necessary to end overfishing and rebuild overfished stocks.

However, as suggested by the commenter, NMFS tried to accommodate incidental landings in other fisheries. Under the final action, fishermen can still retain some non-sandbar LCS while they fish for other species (e.g., reef fish and snapper-grouper). A fisherman with a directed shark permit could harvest 33 non-sandbar LCS per trip and a fisherman with an incidental shark permit could land 3 non-sandbar LCS per trip. The trip limit for directed shark permit holders is based, in part, on BLL observer program data from 2005 to 2007. The observer data showed that fishermen with directed shark permits fishing for snapper-grouper kept, on average, 12 sharks per trip. A 33 non-sandbar trip limit should allow fishermen with directed permits to retain sharks (besides sandbar sharks) they catch while targeting other species and should minimize discards. The incidental trip limit is based on what fishermen with incidental permits currently retain under the status quo.

NMFS also considered whether limiting sandbar harvest to the research fishery would increase dead discards or if NMFS needed to include a trip limit for sandbar sharks. Observer data

indicate that fishermen targeting species other than sharks (i.e., snapper-grouper) catch, on average, one sandbar shark per trip. Given that sets on trips not targeting sharks are typically shorter in length and duration than sets on trips targeting sharks, it is anticipated that sandbar sharks would remain on the gear for less time than on trips targeting shark species, and, thus, would have a greater likelihood of being released alive. Therefore, the current trip limits are not anticipated to result in increased dead discards.

Comment 6: NMFS needs to take a more a precautionary approach in regard to hammerheads, common thresher sharks, and blacktip sharks in the Atlantic region, which have an unknown stock status; NMFS should follow international organizations such as the International Union for the Conservation of Nature (IUCN), and pay attention to red listed shark species such as hammerheads, dusky, and sand tiger sharks, which would likely be taken (under the quota or as bycatch) in the fishery and are particularly depleted. Considering these factors, as well as NMFS' poor record for shark recovery to date, NMFS should close the commercial shark fishery; NMFS should put a moratorium on LCS fishing in the Atlantic until the stock status of Atlantic blacktip sharks is known; NMFS should only allow fishing for Atlantic blacktip sharks within scientifically derived limits when the population is capable of supporting such exploitation and bycatch of prohibited species is demonstrated to be insignificant.

Response: NMFS is implementing management measures based on the latest NMFS-conducted stock assessments for blacktip, dusky, and sandbar sharks, and the LCS complex, which represent the best available peer reviewed science. NMFS is also implementing management measures based on the latest Canadian-based stock assessment for porbeagle sharks, which NMFS determined represents the best available science. The management measures in this final rule are consistent with the rebuilding targets established in these shark stock assessments, and the rebuilding time periods are as short as possible, taking into account the status and biology of the stocks and needs of the fishing communities according to NS 1 guidelines.

In general, shark stock status determinations are based on NMFS-conducted stock assessments. NMFS uses the Southeast Data, Assessment, and Review (SEDAR) process for shark stock assessments, which is open to the public and uses the Center for Independent Experts (CIE) to provide independent peer reviews of assessment results.

These assessments consider landings by other countries such as Mexico and Canada but contain mostly U.S. data. For shark species that may have substantial landings outside of the United States (e.g., blue shark), NMFS also relies on the results of the Standing Committee for Research and Statistics (SCRS) of the International Commission for the Conservation of Atlantic Tunas (ICCAT). These stock assessments are conducted with scientists and data from throughout the world, including U.S. scientists and data. In the case of porbeagle sharks, SCRS determined that ICCAT did not need to conduct a stock assessment since Canada had already conducted one. As such, NMFS scientists reviewed the Canadian stock assessment and determined it was appropriate for use in domestic management.

To date, NMFS has not relied on outside organizations, such as the IUCN, when making stock status determinations. This is due to the unknown nature of the data and peer review methodology applied by these outside groups.

The latest blacktip shark assessments recommended not increasing catch levels in the Gulf of Mexico and keeping catch levels at historical levels in the Atlantic. To account for differences in catch between the Gulf of Mexico and Atlantic region and to follow recommendations from the blacktip shark stock assessments, NMFS is implementing a Gulf of Mexico non-sandbar LCS regional quota and an Atlantic non-sandbar LCS regional quota based on historical landings from HMS shark dealer reports from 2003 to 2005. Based on dealer reports, the Atlantic region has a lower non-sandbar LCS base quota (188.34 mt dw) than the Gulf of Mexico region (439.5 mt dw). Since the Atlantic blacktip shark stock assessment recommended not changing landings and did not recommend prohibiting the harvest of blacktip sharks, NMFS is implementing this regional quota based on historical landings in the Atlantic region.

Unlike the sandbar shark assessment, which recommended a specific TAC, or the blacktip stock assessments, which recommended specific catch levels, the dusky shark assessment did not give specific mortality targets. Dusky sharks have been on the prohibited species list in 2000; however, there continue to be dusky shark discards in other fisheries. NMFS estimated reduction in dusky shark mortality as a result of sandbar shark and non-sandbar LCS management actions. Based on the reduced quotas and trip limits, NMFS estimates that dusky shark mortality will likely be reduced from 33.1 mt dw to 9.1 mt dw per year. This is a 73–percent reduction in mortality compared to the status quo, which should help rebuild the dusky shark population and afford dusky sharks more protection compared to the status quo.

Finally, NMFS is aware of a separate external hammerhead shark stock assessment that is being conducted, but not aware of separate stock assessments for common threshers or sand tiger sharks. Conducting stock assessments at a species specific level is difficult due to the lack of species-specific information collected to conduct stock assessments for each species of sharks involved in commercial shark fisheries. Therefore, species such as hammerhead sharks and common threshers are managed within species complexes. While NMFS is not implementing management measures for hammerhead sharks, it is likely that hammerhead shark landings will be reduced due to the reduced non-sandbar LCS quota and retention limits.

NMFS has not considered specific management actions for common threshers in this rulemaking, but an annual quota is in place for the pelagic shark complex (488 mt dw), and underharvests of this complex are not applied to the next season. NMFS may consider additional management actions for this species, as warranted, in the future.

For sand tiger sharks, based on their high vulnerability to exploitation and to discourage any future directed fisheries, NMFS included these sharks on the prohibited species list in 1997. Additionally, as with the dusky sharks, a reduction in discards based on the sandbar shark and non-sandbar LCS quotas and management actions taken in this rulemaking should afford additional protection for sand tiger sharks.

Comment 7: NMFS should include landings by states, such as Louisiana and Alabama, against the Federal shark quota.

Response: NMFS counts both Federal and state landings of sharks against the Federal shark quota since sharks in both state and Federal waters contribute to the stocks that are federally managed. This approach is consistent with that used by NMFS to manage other Federal fisheries such as reef fish and snapper grouper.

Comment 8: NMFS should consider species-specific quotas. NMFS should begin with blacktip sharks, since an assessment was done for them in both

the Gulf of Mexico and Atlantic. This is because of variation in life history parameters, different intrinsic rates of increase, and different catch and abundance data for all species listed in each complex. Managing sharks as a complex is inappropriate.

Response: NMFS is moving towards species-specific management, including species-specific quotas. However, for some species, NMFS has only limited data which requires management to be based on species within a complex. Based on the latest stock assessment, NMFS has removed sandbar sharks from the LCS complex, resulting in a sandbar shark quota, and a non-sandbar LCS quota, comprised of blacktip, bull, smooth hammerhead, scalloped hammerhead, smooth hammerhead, lemon, nurse, silky, tiger, and spinner sharks. The sandbar shark assessment gave a specific TAC for sandbar sharks, which resulted in NMFS accounting for sandbar shark mortality in all fisheries (both commercial and recreational sectors) before establishing a base commercial quota of 116.6 mt dw. In order to monitor this quota, NMFS removed sandbar sharks from the LCS complex and set a separate commercial quota for this species.

However, while separate blacktip shark assessments were conducted, NMFS has decided not to implement separate blacktip shark quotas because the shark fishery is a multi-species fishery. The majority of sharks harvested in the directed shark fishery, other than sandbar sharks, are blacktip sharks. For instance, 82-percent of sharks caught in the directed shark fishery in the Gulf of Mexico region are blacktip sharks (not including sandbar sharks). The next highest landings were for hammerhead sharks at 7-percent and bull sharks at 5-percent. The South Atlantic region had the same pattern with the highest percentage of landings, apart from sandbar sharks, for blacktip sharks at 72-percent followed by hammerhead sharks at 14-percent, and then bull sharks at 4-percent. Because NMFS did not have species-specific assessments on other species besides blacktip and sandbar sharks, and because the majority of the LCS catch, not including sandbar sharks, is blacktip sharks, NMFS created a non-sandbar LCS complex with its own quota. To account for differences in catch between the Gulf of Mexico and Atlantic region, NMFS is implementing a regional Gulf of Mexico non-sandbar LCS quota and an Atlantic non-sandbar LCS quota.

Comment 9: NMFS should split the sandbar quota between research and bycatch. This could be a ''phased-in'' quota system where ⅔ of the quota in the first year would be allocated toward incidental landings and ⅓ would be allocated toward research.

Response: In establishing the base commercial quota of 116 mt dw, NMFS allocated approximately 42 mt dw to account for recreational harvest and dead discards. A further allocation of ⅓ of the base commercial quota for the research fishery in the first year would only result in 38.8 mt dw for research. In addition, due to overharvests in 2007 (see Appendix C in the FEIS for more details), NMFS is reducing the base commercial sandbar shark quota to 87.9 mt dw annually for five years. A ⅓ allocation of this reduced base commercial quota would only leave 29.3 mt dw of sandbar quota available for research. One third of either the base annual quota or the adjusted five year quota would not provide enough trips or observations to produce statistically sound data on the several research questions NMFS intends to address, especially given that NMFS has already accounted for dead discards and recreational harvest in setting the base commercial quota. In addition, a ⅔ allocation of the sandbar quota would only allow fishermen (directed or incidental) to retain a few sandbar sharks (less than what was proposed under alternative suite 3, where all permit holders would have been allowed to retain sandbar sharks). Thus, splitting the quota into thirds would not provide benefits to the fishery or to the research needed for future stock assessments. However, as funds are available, NMFS would have scientific observers on vessels fishing outside the research fishery that would monitor discards of sandbar sharks. If large number of sandbar dead discards occurred in the fishery, resulting in mortality above the recommended TAC, NMFS would take management action, as necessary. Additionally, NMFS will monitor landings of sandbar shark by state fishermen and deduct those landings from the base commercial quota, as needed.

Comment 10: NMFS should not use the maximum rebuilding time period (70 years) allowed under the law but should use a more precautionary approach. NMFS should not strive for maximum sustainable yield (MSY) for blacktip and sandbar sharks. The proposed sandbar shark quota of 116 metric tons (mt) is too high to ensure recovery of this population and NMFS should consider adopting an even lower final number.

Response: The 2005/2006 stock assessment for sandbar sharks discussed three rebuilding scenarios, including: a rebuilding timeframe if no fishing were allowed; a TAC corresponding to a 50-percent probability of rebuilding by 2070; and a TAC corresponding to a 70-percent probability of rebuilding by 2070. Under no fishing, the stock assessment estimated that sandbar sharks would rebuild in 38 years. Under the NS 1 guidelines, if a species requires more than 10 years to rebuild, even in the absence of fishing mortality, then the specified time period for rebuilding may be adjusted upward by one mean generation time. Thus, NMFS added a generation time (28 years) to the target year for rebuilding sandbar sharks. The target year is the number of years it would take to rebuild the species in the absence of fishing, or 38 years for sandbar sharks. NMFS determined that the rebuilding time that would be as short as possible for sandbar sharks would be 66 years, taking into account the status and biology of the species and severe economic consequences on fishing communities. This would allow sandbar sharks to rebuild by 2070 given a rebuilding start year of 2004, the last year of the time series of data used in the 2005/2006 sandbar shark stock assessment. Since sharks are caught in multiple fisheries, to meet the rebuilding timeframe under a no fishing scenario, NMFS would have to implement restrictions in multiple fisheries to eliminate mortality, such as entirely shutting down multiple fisheries to prevent bycatch. If NMFS were to shut down the shark fishery completely, such action would likely have severe economic impacts on the fishing community and it would likely result in difficulties for fisheries in which Councils recommend management measures as well as Commission-managed fisheries, which often catch sharks as bycatch. In addition, prohibiting all fishing for sharks would impact NMFS' ability to do collect data for future management.

The recommended TAC associated with a 50–percent probability of rebuilding by 2070 is 172.7 mt dw (or 240 mt whole weight (ww)). However, given the life history of sharks including slow growth, late age of maturity, and relatively small litter sizes, as described in the 1999 Fishery Management Plan for Atlantic Tunas, Swordfish, and Sharks (1999 FMP), a 50–percent probability of success is minimally acceptable for sharks. Thus, NMFS adopted the TAC corresponding to a 70–percent probability of rebuilding by 2070, or 158.3 mt dw (220 mt ww). This timeframe is consistent with the Magnuson-Stevens Act, the NS 1 guidelines at § 600.310, the 2006 Consolidated HMS FMP (which

includes the rebuilding requirements of the 1999 FMP), and the other national standards that require NMFS to consider, among other things, the economic and social impacts of the fishery.

b. Discard Issues

Comment 11: NMFS should consider sandbar shark discards outside the research fishery. NMFS should also be concerned with derby-style fishing with the reduced quotas and retention limits.

Response: NMFS considered sandbar shark discards outside the shark research fishery when it established the base sandbar shark quota (see Table A.1 in Appendix A of the Final EIS). In doing so, NMFS set a commercial sandbar shark quota that, in addition to considering discards in other fisheries outside the shark research fishery, should keep sandbar shark mortality below the recommended TAC of 158.3 mt dw each year. In order to deter derby-style fishing outside the shark research fishery, NMFS reduced the trip limit for directed shark permit holders to 33 non-sandbar LCS per trip. This trip limit should allow the LCS fishery to stay open longer than it has in the past while also minimizing, to the extent practicable, regulatory discards and derby-style fishing.

Comment 12: NMFS should acknowledge that dusky shark bycatch will be an issue both inside and outside the research fishery. Seventy percent of dusky sharks are dead at haulback.

Response: Dusky sharks caught as bycatch under the new management measures would result in dead discards to the same extent as current levels. Currently, most of the dusky shark discards occur within the directed shark fishery (on average, 24.5 mt dw per year), with a total of 33.2 mt dw of dusky sharks discarded on average per year. Under the final action, there would no longer be a directed LCS fishery. For a limited number of trips, the few vessels that qualify for participation in the shark research fishery will be allowed to direct on LCS. Depending on the number of trips taken within the research fishery, NMFS estimates that yearly dusky shark discards could be between 0.5 mt dw (that would be caught during 64 trips associated with the adjusted sandbar shark quota) and 0.6 mt dw (that would be caught during 92 trips associated with the base sandbar shark quota), with a total of 9.1 mt dw of dusky shark discards across all fisheries. This is a 73–percent reduction in dusky shark discards compared to the status quo.

Comment 13: NMFS should evaluate if highgrading will be an issue outside the research fishery.

Response: Under the final action, highgrading, or the discarding of smaller, less valuable animals and retaining only the most valuable animals to fill a retention limit, is expressly prohibited. However, because fishermen aim to have the highest profits per trip, highgrading can be an issue whenever trip limits are implemented.

Based on the latest shark stock assessments, NMFS is implementing a reduced shark trip limit from 4,000 lb of LCS per trip to 33 non-sandbar LCS per trip for directed permit holders operating outside the research fishery. NMFS expects that this reduced trip limit (approximately one quarter of what a directed fisherman lands on a shark trip under the status quo) and the prohibition on the retention of sandbar sharks will result in fishermen with directed shark permits no longer targeting LCS. Additionally, this trip limit is higher than the average number of sharks shark fishermen currently retain when targeting other species (i.e., 12 sharks from non-targeted trips). Thus, NMFS assumes that the reduced trip limit will allow fishermen with directed shark permits to keep all incidentally caught non-sandbar LCS as they target non-sharks species. Because fishermen will likely be allowed to keep all sharks caught when fishing for other species, the reduced trip limit should reduce the incentive to engage in highgrading.

c. Species Complexes

Comment 14: NMFS should reconsider the use of the term ''non-sandbar LCS.'' This title is awkward and might confuse some fishers. The use of ''LCS'' or ''LCS (other than sandbars)'' is recommended following the same logic as when referring to ''pelagic sharks'' (which otherwise would be referred to as non-blue or porbeagle pelagic sharks.)

Response: NMFS considered several names for the group of LCS that does not include sandbar sharks. NMFS felt keeping the title ''LCS'' for the new complex may be confusing with the ''old'' LCS complex (i.e., the complex prior to the implementation of the amendment). NMFS chose ''non-sandbar LCS'' because it was the most explicit description of the new complex: the LCS complex with sandbar sharks removed.

Comment 15: NMFS is taking sandbars out of the LCS complex. Where did NMFS get the authority to remove a given species from a complex?

Response: NMFS has the authority under the Magnuson-Stevens Act to manage all coastal sharks. As part of this authority, NMFS created the complexes in 1993 to aid in managing the fishery. Thus, NMFS may set species-specific quota as appropriate, given the best available science. Indeed, NMFS has often changed the specific species in each management unit starting with the creation of five prohibited species in 1997. In this case, the sandbar shark assessment gave a specific TAC for sandbar sharks, which resulted in NMFS establishing a base commercial quota of 116.6 mt dw. In order to monitor this quota, NMFS is establishing a quota for sandbar sharks that is separate from the quota for the rest of the LCS complex.

Comment 16: The Director of the North Carolina Division of Marine Fisheries stated that NMFS should place blacktip sharks in the small coastal shark (SCS) complex.

Response: NMFS is not changing the composition of the SCS complex in this rulemaking. Rather, based on the TAC recommended by the sandbar shark stock assessment, NMFS is establishing separate quotas for sandbar sharks and the non-sandbar LCS. The non-sandbar LCS complex consists of blacktip, bull, smooth hammerhead, scalloped hammerhead, lemon, nurse, silky, tiger, and spinner sharks. Blacktip sharks are the species most commonly caught within this complex. In the 1993 FMP for Atlantic Sharks, blacktip sharks were placed within the LCS complex based on fishery dynamics. Blacktip sharks are more commonly caught with gear targeting LCS (i.e., BLL gear) rather than gear used to target SCS (i.e., gillnet gear). In addition, the blacktip shark stock assessments recommended that blacktip shark landings should not change or increase from historical catch levels. By placing blacktip sharks within the SCS complex, NMFS could either drastically reduce the blacktip shark regional quotas if the 454 mt dw SCS complex quota was not increased (i.e., the 454 mt dw quota would include the quota for blacktip sharks and SCS), or increase the SCS complex quota to include historical catch of blacktip sharks. Placing blacktip sharks within the SCS complex and increasing the overall SCS quota could result in increased catch levels of SCS. These catch levels may or may not be sustainable for the SCS complex. Therefore, at this time, NMFS is not placing blacktip sharks within the SCS complex.

d. Over- and Underharvests

Comment 17: NMFS received several comments regarding transferring quota. These include: NMFS should consider transferring unused quota to the next season; NMFS should not consider transferring underharvests to the next season even if species are not overfished or the status is unknown. This is because other bodies such as the IUCN have expressed concern as to some of these species; NMFS should subtract quota overages from the subsequent season's quota and disallow carryover of underharvests to the next season for populations that are of unknown status, overfished, or experiencing overfishing.

Response: Under the final action, NMFS will generally subtract overhavests that occurred during one fishing year from the next fishing year for each individual species or species group. Depending on the amount of overharvests, NMFS may decide to split the overharvests over several years to allow continuation of the shark research fishery and to minimize dead discards. In addition, NMFS will add underharvests up to 50-percent of the base quota to the next fishing year for species or species grouping in which the stock status of all species is other than unknown, overfished, or subject to overfishing. For all other species and species groups, underharvests will not be carried. Not applying underharvests should increase the likelihood that these stocks rebuild in a timelier manner. This approach is also used in other fisheries that NMFS manages, including bluefin tuna and swordfish.

e. Shark Display and Research Quota

Comment 18: NMFS received several comments in favor of the preferred management measures affecting display quotas under alternative suite 4. These comments included: NMFS should allocate 2 mt dw of sandbar sharks from the overall 60 mt ww display and shark research quota to public display and research under exempted fishing permits (EFPs); the 60 metric tons (mt ww) quota for display permits and research should be reduced if it has never been attained; NMFS should prohibit dusky sharks for public display; and, dusky sharks have no display value.

Response: In order to stay within the TAC recommended by the sandbar stock assessment, NMFS is reducing the commercial sandbar shark quota, and restricting the number of sandbar sharks that can be collected under EFPs and Display Permits. The final action restricts the sandbar shark collection to 1 mt dw for research under EFPs and 1 mt dw for public display to ensure that the sandbar shark mortality stays below the 158.3 mt dw TAC and to ensure that the shark research fishery has sufficient quota to produce statistically sound data. The preferred allocations to the EFP and display quotas were based on the 2 mt dw average annual collection of sandbar sharks under EFPs, scientific research permits (SRPs), and display permits from 2000 to 2006. As such, NMFS does not anticipate that these restrictions will affect future sandbar shark collections under these types of permits.

Due to the severity of the overfished and overfishing status of dusky sharks, the collection of dusky sharks for public display will be prohibited. Aquariums that currently have dusky sharks will not be allowed to replace them. In addition, NMFS will review the allocation of dusky sharks for research under EFPs on a case by case basis. This should allow for research under EFPs on dusky sharks to continue, as appropriate.

Comment 19: NMFS received numerous comments stating that the existing research/display quotas for sharks should not be reduced because: the quota is already small and not expected to increase in the future; the EFP quota has never been exceeded; the collection of sandbar sharks for public display is not a significant contributing factor to the reported decline of this stock; there is a disproportionate amount of regulation on display permits compared to other permits for other fishermen; any reduction in quotas or restrictions on species, if scientifically warranted and if based on scientifically peer-reviewed stock assessments, should come entirely out of the commercial quotas which have not been historically adhered to, and where the animals are landed dead with zero conservation or educational value; the sandbar shark is one of only a handful of shark species that are exceptionally hardy and have historically adapted well to closed aquarium environments.

Response: While the 60 mt ww (or 43.2 mt ww) shark display and research quota is small compared to the current commercial 1,017 mt dw LCS quota, the final action does not change the overall display and research quota. The final action, however, does significantly reduce the commercial quota and prohibits most commercial fishermen from harvesting sandbar sharks. Additionally, the final action prohibits recreational retention of sandbar sharks.

As described in the response to Comment 18 in this section, the quantity of sandbar and dusky sharks authorized for display and research (outside of the shark research fishery) is limited under the final action. For sandbar sharks, the amount is limited to what has been landed, on average, under various EFPs during the past six years. Therefore, no negative economic impacts are anticipated with the EFP allocation of sandbar sharks. EFPs and display permits will no longer be issued for the collection of dusky sharks. This regulation is consistent with the prohibition on the harvest of dusky sharks by commercial and recreational fishermen and, because of the overfished status and length of time for rebuilding, is appropriate for dusky sharks.

Finally, because EFPs exempt fishermen from certain regulations that other fishermen must follow, NMFS will continue to issue EFPS, SRPs, and display permits only if the applicant has shown compliance with other relevant regulations regarding reporting, notifying enforcement, and tagging animals.

Comment 20: NMFS should consider an exemption to allow for the live take of dusky sharks for public display. Aquariums need to work on the husbandry of these sharks.

Response: As discussed in the response to Comment 18 in this section, due to the severity of the overfished and overfishing status of dusky sharks, dusky sharks will be prohibited for collection for public display. Moreover, dusky sharks do not do well in captivity. Currently, only 13 dusky sharks per year have been collected under EFPs. Under the final action, NMFS will review the allocation of dusky sharks for research under EFPs on a case by case basis. This should allow for research under EFPs on dusky sharks to continue, as appropriate.

Comment 21: NMFS should explain how it will prohibit sandbar and dusky sharks for EFPs and display permits.

Response: EFPs allow fishermen to harvest species otherwise prohibited by existing regulations. NMFS is not prohibiting the collection of sandbar sharks under the EFP program. Instead, 1 mt dw for research under EFPs and 1 mt dw for public display will be allocated to fishermen to ensure that the sandbar shark mortality stays below the 158.3 mt dw TAC. However, due to the severity of the overfished and overfishing status of dusky sharks, dusky sharks will be prohibited for collection for public display because they do not do well in captivity. While NMFS cannot prohibit fishermen from incidentally catching dusky sharks, NMFS can prohibit their retention for public display or research under EFPs when necessary. NMFS reviews the

allocation of dusky and sandbar sharks under EFPs and Display Permits on a case-by-case basis. If research on dusky sharks is deemed scientifically necessary, even if it includes mortality, NMFS may issue the necessary EFPs. However, such permits must have scientific merit and the research conducted by scientific staff in order for the permit to be issued. As is currently done for EFPs and Display permits, NMFS will continue to monitor all sources of mortality as a result of EFPs, Display Permits, Scientific Research Permits, and Letters of Acknowledgments, and these data will be incorporated in future stock assessments.

Comment 22: NMFS should provide more information on how they track landings under EFPs and what happens to HMS that are collected under EFPs.

Response: NMFS requires persons who receive EFPs to report the number of total animals kept, discarded alive, and discarded dead under the EFP program. This information is published in the **Federal Register** every November/December in conjunction with NMFS' request for comments and Notice of Intent to issue EFPs and related permits in the subsequent year. The information is also published in the annual SAFE Report and may be used in stock assessments, if appropriate. Permittees who do not provide this information are not issued a permit in the future until all required reporting from past permits was received. NMFS does not track what is done with the animals (e.g., if they are sold to aquariums) after they have been collected and landed by the original permittees.

2. Porbeagle Sharks as Prohibited

Comment 1: NMFS received several comments in support of prohibiting the harvest of porbeagle sharks including: NMFS should prohibit the harvest of porbeagle sharks because even seasoned fishermen misidentify porbeagle sharks as mako sharks; the prohibition on the possession of porbeagle sharks is long overdue; NMFS should prohibit the harvest of porbeagle sharks and implement stricter management measures that address porbeagle take, including bycatch; and NMFS should prohibit the possession of porbeagle sharks, however, if bycatch of porbeagle sharks is allowed, the rule will have little effect on the overall status of porbeagle sharks.

Response: As a result of the 2005 Canadian stock assessment for the North Atlantic porbeagle shark, NMFS has determined that porbeagle sharks are overfished, but overfishing is not occurring Under the final action, the commercial quota is 1.7 mt dw. NMFS estimates that commercial discards will be approximately 9.5 mt dw, and recreational catch, including landings in tournaments, will be approximately 0.1 mt dw per year. This TAC of 11.3 mt dw should increase the likelihood that fishing mortality will remain low, allowing the stock to rebuild within 100 years (see rebuilding plan in Chapter 1 of the FEIS). While bycatch of porbeagle sharks will continue, the majority of porbeagle sharks caught currently are discarded alive. For instance, of an average of 723 porbeagle sharks that were discarded annually in the PLL fishery, only 161.3 were discarded dead whereas 561.6 were discarded alive. The final action is not expected to change this discard mortality rate. Therefore, dead discards should continue to be low and not negatively affect the stock.

Comment 2: NMFS received several comments, including comments from the states of Massachusetts and New Hampshire, opposing any prohibition of porbeagle shark retention including: there is a small historical porbeagle shark catch in the United States that is not significantly contributing to the loss of the porbeagle shark. The U.S. porbeagle fishery has remained sustainable under current regulations; other countries, such as Canada, should be more responsible for rebuilding this stock as they contribute more towards Atlantic-wide fishing mortality; NMFS should pressure Canadians to reduce their porbeagle catch; porbeagle sharks are the only big game fish in the Northeast; and placing porbeagle sharks on the prohibited species list takes away 33–percent of the potential catch in New England.

Response: The final action to reduce the TAC for porbeagle sharks will cap U.S. fishing mortality at the current level. Given the low level of porbeagle catch in U.S. waters, capping mortality at the current U.S. fishing level, assuming Canada also continues to take action to conserve porbeagle sharks, should allow the porbeagle shark population to rebuild within 100 years (see rebuilding plan in Chapter 1 of the FEIS). Capping fishing levels should also discourage any future directed fishery on this species.

Other countries that have a directed fishery for porbeagle sharks have reduced their porbeagle quotas. For instance, the Canadian porbeagle quota was cut by 80–percent in 1998. It was cut back even further in 2001 and again in 2006. The current Canadian quota is 250 mt per year, 185 mt of which may be taken by the directed porbeagle shark fishery, with the rest of the quota being allocated for bycatch. In addition, according to the latest ICCAT Recommendation (07–06), all contracting parties are obligated to reduce mortality of porbeagle sharks in their directed porbeagle shark fisheries. NMFS may take additional management measures in the future, as necessary, if future stock assessments warrant such action.

Comment 3: The Atlantic States Marine Fisheries Commission (ASMFC) requested establishing a 2 mt quota for porbeagle sharks to allow a limited harvest. Allowing a small harvest of porbeagle sharks would help the ASMFC set identical species groups while offering protection from overharvest.

Response: NMFS is setting a reduced TAC for porbeagle sharks of 11.3 mt dw, of which 1.7 mt dw is allocated to commercial harvest. This cap on fishing mortality at its present level by commercial and recreational fishermen should prevent a directed fishery for this species from developing in the future. In addition, it is an 88–percent reduction in the current commercial quota of 92 mt dw, which will help ensure rebuilding within 100 years (see rebuilding plan in Chapter 1 of the FEIS).

Comment 4: Does NMFS have any evidence that Canadian porbeagle sharks go into U.S. waters? Is NMFS aware if U.S. fishermen are catching these Canadian sharks?

Response: Tagging data provide strong evidence that there are distinct porbeagle populations in the Northeast and Northwest Atlantic, and that the Northwest Atlantic stock is a separate population that undertakes extensive annual migrations between Canada and northeastern United States. Given these migrations, porbeagle sharks found in U.S. and Canadian waters are considered to be one stock that is shared by U.S. and Canadian fishermen.

Comment 5: If porbeagle sharks are overfished but overfishing is not occurring, what would the rebuilding timeframe be if the fishery was to continue at the current level?

Response: Since the 2005 Canadian stock assessment on which NMFS based its analysis included U.S. commercial landings of porbeagle sharks, capping fishing mortality at its current level should allow the species to rebuild within 100 years (see rebuilding plan in Chapter 1 of the FEIS).

Comment 6: Will NMFS propose similar porbeagle shark prohibition measures at the International Commission for the Conservation of Atlantic Tunas (ICCAT) meeting this year? Since most landings for porbeagle

occur outside the United States, international cooperation is needed to help manage this species.

Response: Adopted at the 2007 ICCAT annual meeting in Turkey, ICCAT Recommendation (07–06) obligates all Contracting Parties to take appropriate measures to reduce fishing mortality in fisheries targeting porbeagle sharks. While the United States does not have a directed porbeagle shark fishery, and U.S. commercial and recreational landings are small (1.8 mt dw), this ICCAT measure should help reduce mortality of porbeagle sharks that are targeted by other countries. The United States is also implementing a reduced TAC of 11.3 mt dw, which is below the current commercial quota of 92 mt dw per year for porbeagle sharks, and encouraging the live release of porbeagle sharks. This final action should prevent a directed fishery from developing for porbeagle sharks in U.S. waters in the future.

Comment 7: NMFS underestimated the number of porbeagle sharks being caught. This is because the Marine Recreational Fisheries Statistics Survey (MRFSS) data is flawed. Porbeagle sharks are not present in New England waters when MRFSS is collecting their surveys in this area.

Response: NMFS currently is working on a marine recreational information program to improve data collection from the recreational sector. Due to the rarity of porbeagle shark landings, it is difficult to estimate porbeagle landings with survey data, which only sample a portion of the recreational fishing fleet and then extrapolate the number of fish caught based on the estimated number of anglers. Therefore, NMFS may consider census data (i.e., a trip ticket or a call-in system where all porbeagle shark landings are counted) in the future to better estimate recreational porbeagle landings.

Comment 8: The Large Pelagic Survey (LPS) started out as a tuna survey, and the LPS survey happens during the middle of summer. There is no LPS survey taking place when porbeagle sharks are present, so NMFS' data is skewed.

Response: The LPS survey was designed to capture recreational landings in the Northeast during the time period when most fishing takes place north of Virginia. Currently, the survey consists of randomly selected weekly telephone and dockside intercept interviews, with mandatory participation from June 1 through October 31 from Virginia to New York. The survey is conducted July 31 through October 31 for states north of New York. Past phone surveys indicated this is when most of the fishing effort occurs in this region. As mentioned in the response to Comment 7 in this section, due to the rarity of porbeagle shark landings, it is difficult to estimate porbeagle landings with survey data. Therefore, NMFS may consider census data (i.e., trip ticket or a call-in system where all porbeagle sharks landed are counted) in the future to better estimate recreational porbeagle landings.

Comment 9: NMFS should have recreational fishermen report their porbeagle shark landings.

Response: NMFS currently does not require recreational fishermen to report shark landings. NMFS collects data on recreational fishing catch and effort through the LPS and the MRFSS, which is considered the best available science for determining recreational landings. These surveys collect data on fishing effort and catch of highly migratory species. In addition, randomly selected fishing tournaments are an important component of HMS recreational fisheries data. However, because of the rarity of porbeagle shark landings, in general, NMFS may not be capturing all of the porbeagle sharks landed recreationally through these types of surveys. Thus, NMFS is currently working on ways to gather more data on recreational landings of porbeagle sharks.

3. Retention Limits

Comment 1: The proposed 22 non-sandbar LCS retention limit is not economically feasible and is the equivalent of shutting down the fishery; NMFS should consider a trip limit of 0 to 75 non-sandbar LCS to maintain economic viability.

Response: NMFS assessed and analyzed the economic impacts of the proposed retention limits, which are summarized in the FRFA and Chapter 8 of the FEIS. The proposed 22 non-sandbar shark LCS retention limit was calculated by dividing the available quota over average annual number of trips that landed non-sandbar LCS by directed and incidental permit holders as reported in the Coastal Fisheries logbook and the HMS logbooks. At the time of the Draft EIS, the available non-sandbar LCS quota was determined by the average annual landings reported in the HMS and Coastal Fisheries logbooks from 2003 to 2005. However, during the comment period, the Southeast Fisheries Science Center (SEFSC) recommended using HMS shark dealer reports (i.e., southeast and northeast general canvass and SEFSC quota monitoring databases) to calculate historical landings of non-sandbar LCS since the stock assessments were, in part, based on landings reported by HMS shark dealer reports. Therefore, in the FEIS, NMFS used the shark dealer reports to calculate the non-sandbar LCS base quota. Because the HMS shark dealer reports include landings by both state and Federal shark fishermen, whereas logbook data includes landings by only federally-permitted shark fishermen, using dealer reports results in a higher non-sandbar LCS base quota.

In this final action, NMFS is using a higher base quota. After accounting for overharvests that occurred in 2007 (see Appendix C of the Final Environmental Impact Statement), NMFS is revising the retention limits based on the larger non-sandbar LCS quota. The final measures implement a 33 non-sandbar LCS trip limit for directed permit holders and a three non-sandbar LCS trip limit for incidental permit holders. While the trip limit for directed permit holder has increased from what was proposed in the Draft EIS, NMFS assumes that fishermen with directed shark permits will no longer target non-sandbar LCS outside the research fishery. Rather, a 33 non-sandbar LCS trip limit allows fishermen to keep non-sandbar LCS while they target other species, such as reef fish and snapper-grouper. Based on BLL observer program data from 2005 to 2007, fishermen with directed shark permits fishing for snapper/grouper kept, on average, 12 sharks per trip. Thus, this trip limit should help in preventing excess discards. However, this retention limit will be too low to create an incentive for fishermen to target non-sandbar LCS.

NMFS is aware that the revised retention limit of 33 non sandbar sharks per vessel/trip is a significant reduction from the current 4,000 lb dw LCS retention limit for directed permit holders. These measures are necessary, however, to rebuild overfished stocks, reduce bycatch, and end overfishing consistent with NMFS's obligations under the Magnuson-Stevens Act.

Comment 2: NMFS should consider a per day limit in lieu of an individual trip limit. NMFS could reduce the limit to something like 2,000 lb non-sandbar LCS per day. This would allow a larger amount to be harvested in a single trip, making it more profitable for the fishermen. A day limit would also keep quota available for longer throughout the year.

Response: NMFS has not considered a per day trip limit because of the difficulty in determining how NMFS would monitor what a vessel harvests within a 24 hour period during a multiday trip. Currently the shark fishery is managed on a per trip basis, as are most of the HMS fisheries. While

a higher per day limit may allow for a larger single trip, which may reduce discards, it would be difficult for NMFS to monitor when a vessel left and returned to port and whether or not this was done multiple times within 24 hours, especially if vessels visited several ports and were not required to possess vessel monitoring systems (VMS). A per trip limit is easier to enforce; no matter what port a vessel returns to, it would be held to the same trip limit. While a per day limit may reduce the number of trips and elongate the season based on how gillnet and BLL trips targeting non-shark species typically fish, the trip limits in the final action were devised in such a way to keep the non-sandbar LCS season open longer than they have been in the past. NMFS estimates that under the non-sandbar trip limit in this final action, the fishery should remain open the entire year. Given the reduced trip limits to accommodate the reduced shark quotas, NMFS believes that dividing the available quota across the historical fishing effort should help the shark fisheries stay open longer. In addition, since directed shark permit holders will presumably no longer target non-sandbar LCS based on those reduced trip limits and the prohibition on retention of sandbar sharks outside the research fishery, the non-sandbar LCS fishery will likely be incidental in nature where non-sandbar LCS are landed while fishermen target other species throughout the year.

Comment 3: NMFS should propose a 4,000 lb level per year for directed permit holders and grant the least productive vessels an incidental permit.

Response: Based on the available quota (see Appendix C in the FEIS for more details), NMFS is setting a non-sandbar LCS trip limit of 33 non-sandbar LCS for directed shark permit holders (approximately 1,000 lb dw per trip of non-sandbar LCS); incidental permit holders would be allowed 3 non-sandbar LCS per trip. If fishing effort were to stay the same as the average level of effort from 2003-2005, then NMFS expects the shark fishing season to stay open for the entire fishing year with these trip limits. NMFS has chosen a trip limit that would utilize the entire non-sandbar LCS quotas outside the research fishery, assuming fishing effort remains at the average level from 2003-2005. A 4,000 lb dw limit per year for non-sandbar LCS would be approximately four trips per year for directed fishermen. At this time, NMFS feels that such a retention limit would be overly restrictive; however, if NMFS finds that the 33 non-sandbar LCS per trip for directed fishermen does not sufficiently rebuild the overfished stock of sandbar sharks or prevent overfishing, then trip limits can be adjusted, as appropriate. Fishermen selected to participate in the shark research fishery would be afforded higher trip limits consistent with research objectives and would be allowed to land all shark species, except prohibited sharks.

In order for NMFS to change retention limits for individual vessels based on their past landing history, NMFS would likely consider an IFQ or LAPP. However, as explained in response to Comment 2 under ''Quotas'' above and in Chapter 1, it would take NMFS several years to implement an ITQ system. Under the current timeline under the Magnuson-Stevens Act for establishing a plan amendment to end overfishing, NMFS has insufficient time to establish an IFQ or LAPP for sharks at this time. However, NMFS could consider developing an IFQ or LAPP for sharks as well as other highly migratory species in the future.

Comment 4: NMFS should carve out a retention limit specific to existing gillnetters. Gillnetters are being penalized by the preferred retention limit because they catch very few sandbar and dusky sharks.

Response: NMFS believes that revised quotas and retention limits for non-sandbar LCS that apply to all gear types are more appropriate. These revised retention limits include a higher retention limit for directed shark permit holders compared to incidental shark permit holders. While sandbar and dusky sharks may be less likely to be caught in gillnet gear compared to BLL gear, setting separate gillnet retention limits was not considered as a part of this rulemaking mainly because NMFS has serious concerns regarding interaction rates with marine mammals and protected resources with gillnets. Given these interactions set forth in the following paragraph, NMFS believes it is inappropriate to implement measures that might result in increased fishing effort with this gear type. For example, setting different trip limits for gillnet gear could result in displaced BLL fishermen moving to the gillnet fishery.

The five year incidental take statement (ITS) for the drift gillnet fishery in the 2003 Biological Opinion (BiOp) was 10 loggerhead sea turtles (with 1 mortality), 22 leatherback sea turtles (with 3 mortalities) and 1 smalltooth sawfish (with zero mortalities). The ITS was specific to drift gillnet gear as strikenet gear had not interacted with protected species, at that time, and sink nets were not considered to be part of the shark gillnet fishery. However from 2003 to 2007 (2003 being the start of the ITS period), vessels with shark permits using drift, sink, and strike gillnets interacted with a total of 13 loggerhead sea turtles (3 of which died or were unresponsive when discarded), 1 leatherback sea turtle and 2 bottlenose dolphins (1 of which died). In addition, in January 2006, an Atlantic right whale calf was caught and died in gillnet gear off the northeast coast of Florida. Therefore, NMFS is not establishing a higher specific gillnet retention limit at this time.

Comment 5: NMFS should consider capping the number of vessels that can deploy gillnets for sharks.

Response: There are currently only 4 to 6 sink and strike gillnetting vessels combined that target sharks (Carlson and Bethea, 2007). Given the reduction in trip limits as a result of this rulemaking, and restrictions and regulations under the Atlantic Right Whale Take Reduction Plan for this gear, NMFS does not believe there would be a significant increase in shark gillnet fishing in the future.

Comment 6: NMFS should lower the incidental catch limit for non-sandbar LCS to be more in line with the current average (3 non-sandbar LCS/vessel/trip); NMFS should not decrease the directed permit holder retention limits by 30–percent while increasing the incidental retention limit by more than seven times; NMFS should provide better justification for raising the trip limits for incidental permit holders; the proposed retention limit increase for incidental permit holders could increase fishing effort and bycatch; NMFS should consider restricting incidental take of non-sandbar LCS.

Response: In the final action, NMFS establishes retention limits of 33 non-sandbar LCS per trip for directed permit holders and 3 non-sandbar LCS per trip for incidental permit holders. NMFS initially proposed retention limits of 22 non-sandbar LCS per trip for both directed and incidental permit holders because NMFS considers the future non-sandbar shark fishery outside the shark research fishery as mainly incidental in nature (i.e., fishermen would not target non-sandbar LCS based on the low retention limits). Under the proposed scenario, incidental permit holders could have experienced a net positive economic benefit, given the retention limit of 22 non-sandbar LCS trip limit was more than the average of 3 non-sandbar LCS per trip that they currently retain. Such an increase in trip limits for incidental permit holders could have resulted in increased fishing pressure on sharks by incidental permit holders.

Based on public comment and to acknowledge differences among directed and incidental permit holders (e.g., on average, directed permit holders discard more sandbar and dusky sharks (8.1 mt dw and 25.7 mt dw per year, respectively) than incidental permit holders (1.5 mt dw and 3.8 mt dw per year, respectively)), NMFS' final action is to set separate retention limits based on permit type. Directed permit holders will be allowed a higher retention limit than incidental permit holders. This affords directed permit holders, who may have paid more for their directed shark permit and who presumably rely on shark products for a larger part of their income, a higher retention limit than if all permit holders had the same retention limit.

Comment 7: NMFS should clarify how a retention limit based on the number of sharks per trip would work. What happens if you get 100 sharks on a line? Under these new regulations, one will have to make multiple trips to be legal.

Response: Under current regulations, NMFS has a directed LCS trip limit of 4,000 lb dw. When fishermen exceeded this trip limit on a given set, they would often cut their gear and leave it while they returned to port to offload their legal trip limit. Once they had offloaded, they would return to retrieve the rest of their gear and catch. The same principle applies for this final action. However, due to the reduction in the retention limit and the prohibition on the harvest of sandbar sharks, NMFS assumes that fishermen with directed shark permits would no longer target non-sandbar LCS as they have in the past. Rather, fishermen would keep non-sandbar LCS only while they target other species, such as reef fish and snapper-grouper. The trip limit in this final action of 33 non-sandbar LCS for directed shark permits should minimize dead discards of sharks that fishermen catch while in pursuit of other species.

Comment 8: NMFS should have proposed different retention trip limits for different species in different regions because there are more sandbars available in the Atlantic and more blacktip sharks available in the Gulf of Mexico; NMFS should split trip limits by state given the tendency of different areas to catch sandbar or dusky sharks; NMFS should consider the fact that Louisiana fishermen catch mostly blacktip sharks and no sandbar or dusky sharks and, therefore, should have a larger retention trip limit.

Response: Based on public comment, NMFS analyzed regional quotas and retention limits for two regions: the Atlantic and Gulf of Mexico regions. As a result, NMFS is implementing regional quotas based on the results of the blacktip shark assessment, overharvests that occurred in 2007 (for more details, see Appendix C), and the fact that the ASMFC interstate shark management plan will implement measures in state waters of the Atlantic. Regional quotas allow for a higher non-sandbar LCS quota in the Gulf of Mexico region, which is comprised of a healthy stock of blacktip sharks. Regional quotas also allow for a lower non-sandbar LCS quota in the Atlantic region where the stock status of blacktip sharks is unknown and the majority of dusky sharks are caught.

However, while the final action sets regional quotas for non-sandbar LCS, NMFS is not implementing regional non-sandbar LCS retention limits. Instead, the same retention limit for non-sandbar LCS would apply in the Atlantic and the Gulf of Mexico regions. NMFS believes that a single retention limit, regardless of region, will help with enforcement and be less confusing for fishermen. For example, with one retention limit, fishermen fishing near the Florida Keys could move between the two regions on one trip. If there were two different retention limits, then fishermen would need to stay in one area per trip or risk landing a higher trip limit in the wrong region. Finally, while the analyses for setting these retention limits used historical fishing effort as a proxy for determining the retention limit, it is uncertain how future effort would be allocated among regions, or even states. This added uncertainty makes it difficult to determine a region-specific or state-specific retention limit, given the other management measures that are changing as a result of this final action.

Comment 9: NMFS should consider having a set-aside quota for the incidental fishermen so that they can still retain sharks when the directed fishery is closed.

Response: As a result of the final actions in this rule, NMFS is assuming that fishermen with directed shark permits will no longer target non-sandbar LCS. Rather, fishermen will likely keep sharks only while they target other species such as reef fish and snapper-grouper. As such, the non-sandbar LCS fishery would be incidental in nature and non-sandbar LCS will likely be landed only incidental to the non-shark species that the fishermen would target throughout the year. Given the reduced trip limits for non-sandbar LCS, NMFS believes that the shark fishery will remain open for longer periods than in the past, possibly the entire year. Given the analyses that indicate the fishery will be open most of the time and the change in status of the fishery, NMFS believes that an incidental set aside is not needed at this time.

Comment 10: NMFS should consider a trip limit that is not based on weight since most fishermen do not have scales on their vessels.

Response: Under the final action, NMFS is basing the trip limits on the number of sharks per trip for both directed and incidental permit holders.

Comment 11: If 7 out of 10 LCS landed are sandbar sharks, as NMFS claims, and NMFS has a 500+ mt dw non-sandbar LCS quota, then NMFS' discard calculations are flawed. A 500+ mt dw non-sandbar LCS quota would result in 3,500 mt of sandbars being discarded.

Response: The catch composition described above would only be realized if 1) fishermen were directing effort on sharks, and 2) there was a 4,000 lb dw trip limit. This catch composition, which was based on information from NMFS BLL observer reports, was used to estimate the number of trips that the shark research fishery could take to harvest the available sandbar shark quota, assuming there was a 4,000 lb dw LCS trip limit within the research fishery.

However, for trips outside the research fishery, sandbar sharks would be prohibited and there would be reduced non-sandbar LCS trip limits. Therefore, NMFS assumes that directed shark permit holders would no longer make trips targeting non-sandbar LCS because of the significant reduction in retention limits and the fact that sandbar sharks could not be retained, therefore, the catch composition and subsequent sandbar discards described in the comment above would not apply to trips occurring outside the research fishery. Given this assumption, and based on the best available science from logbook, dealer reports, and observer program data, NMFS estimates that incidental sandbar shark mortality outside the research fishery would be approximately 40 mt dw. This estimate was determined by evaluating logbook data and observer reports to estimate sandbar shark discards from pelagic longline (PLL) gear (4.3 mt dw), discards by recreational fishermen (27 mt dw), discards within the shark research fishery (0.3 mt dw), sandbar sharks discarded by fishermen without HMS permits (6.3 mt dw), and sandbar sharks that used to be landed by incidental fishermen (2.3 mt dw).

4. Fins On Requirement

Comment 1: NMFS received several comments in support of a ban on shark finning as well as support for the proposal to land sharks with their fins attached. Commenters believe that shark identification is hampered by fin removal, enforcement is made easier if sharks are landed with fins attached, that the quality of data collected would improve, which is critical to improving the sustainability of shark stocks, and that technical difficulties of landing sharks whole could be alleviated with input from fishery experts and NOAA staff. A commenter also stated that NMFS should implement this measure promptly in the Atlantic while also taking steps to ensure a similar measure is implemented in the U.S. Pacific waters.

Response: On December 21, 2000, the Shark Finning Prohibition Act (Public Law 105–557) (SFPA) was signed into law. The SFPA amended the Magnuson-Stevens Act section 307(1)(P), making it unlawful for any person ''(i) to remove any of the fins of a shark (including the tail) and discard the carcass of the shark at sea; (ii) to have custody, control or possession of any such fin aboard a fishing vessel without the corresponding carcass; or (iii) to land any such fin without the corresponding carcass.'' On February 11, 2002 (67 FR 6194), NMFS published a final rule that established regulations which, among other things, prohibit any person from engaging or attempting to engage in shark finning; possessing shark fins without the corresponding carcasses while on board a U.S. fishing vessel; and landing shark fins without the corresponding carcasses. In this Amendment, NMFS is selecting an alternative that will require fishermen to land sharks with their fins naturally attached. This requirement will improve enforcement, species identification, data quality for future stock assessments, and further prevent the practice of shark finning. In the U.S. Pacific Ocean, three Regional Fishery Management Councils recommend shark management measures to NMFS: the Pacific Fishery Management Council, the North Pacific Fishery Management Council, and the Western Pacific Management Council. The Councils may consider recommending amendments to fishery management plans to include measures to land sharks with fins attached in the U.S. waters of the Pacific Ocean.

Comment 2: NMFS received several comments in opposition to landing sharks with fins attached stating that this requirement would result in large amounts of waste at the dock, that the market has grown accustomed to receiving sharks in log form, that it will be more difficult for law abiding fishermen to comply with the law, and it will do nothing for those intent on breaking the law who may still bring only fins to the docks.

Response: While this requirement will change current fishing practices, NMFS does not believe that the requirement to land sharks with fins attached is overly burdensome for the following reasons. The requirement to land sharks with fins attached will allow fishermen to leave the fins attached by at least a small piece of skin so that the fins could be folded against the carcass and the shark packed efficiently on ice while at sea. Shark fins could then be quickly removed at the dock without having to thaw the shark. Sharks may be eviscerated, bled, and the head removed from the carcass at sea. These measures should prevent excessive amounts of waste at the dock, since dressing (except removing the fins) the shark may be performed while at sea. While this will result in some change to the way in which fishermen process sharks at sea, because the fins may be removed quickly after the shark has been landed, NMFS expects that the market will continue to receive sharks in their log form. Alternatively, the dealers may decide to accept shark carcasses with the fins still attached. No person aboard a vessel with a shark permit would be allowed to possess shark fins without the fins being attached to the corresponding carcass until after the shark has been landed. Individuals that do not have a shark permit or who land shark fins detached from the corresponding carcass will be in violation of the regulations and subject to enforcement action.

Comment 3: NMFS received several comments regarding the 5–percent fins to carcass ratio stating that 1) the ratio is wrong and NMFS needs to collect data to re-examine the ratio because it is different for all species, 2) NMFS should urge Congress to revise the fin to carcass ratio in the SFPA, 3) making fishermen land sharks with fins attached could still lead to a violation of the 5–percent ratio, and 4) fishermen are unsure of which weight to record in their logbook if the 5–percent ratio remains in effect and sharks are landed with fins attached.

Response: NMFS first implemented the 5-percent fin-to-carcass ratio in the 1993 Shark FMP. This ratio was based on research that indicated that the average ratio of fin weight to dressed weight of the carcass was 3.6 percent, and the sandbar fin ratio was 5.1 percent. In December 2000, the SFPA was signed into law. The SFPA established a rebuttable presumption that any shark fins landed from a fishing vessel or found on board a fishing vessel were taken, held, or landed in violation of the shark finning ban if the total weight of shark fins landed or found on board exceeded 5-percent of the total weight of shark carcasses landed or found on board. This management measure was implemented by NMFS through a final rule released in February 2002. NMFS may conduct additional research on the fin-to-carcass ratio in the shark research fishery, though any changes to the 5-percent ratio will have to be modified by Congressional action. In order to help fishermen document that sharks were landed with their fins attached, NMFS intends to modify the dealer weigh-out slips so that dealers may clearly document that the sharks were landed with fins attached. Consistent with the regulations at § 635.30(c)(3), a person that has been issued a Federal shark LAP and who lands shark in an Atlantic, Gulf of Mexico, or Caribbean coastal port must have all fins and carcasses weighed and recorded on the weigh-out slips specified in § 635.5(a)(2) and in accordance with regulations at part 600, subpart N. Fishermen may either record the weight of the whole shark landed or they may record carcass and fin weights separately. Dealers must report the dressed carcass weight separately from the fin weight.

Comment 4: NMFS received several comments, including one from the State of Florida, that NMFS should recalculate the conversion factor between dressed weight and whole weight of a shark since more of the shark is going to be landed.

Response: The 1.39 conversion factor from dressed weight to whole weight is used to convert the dressed (gutted) weight of a shark, (the weight of the shark carcass in a log form with fins removed) to a whole weight. NMFS will continue to monitor shark quotas in dressed weight (i.e., carcass in log form with fins removed) and will use shark landings recorded via dealer reports to monitor the quota outside the shark research fishery. Therefore, the conversion factor should not need to be recalculated since the definition of dressed weight would still constitute a shark log with fins removed. Currently, dealers record the fin weights and dressed weight of the shark carcasses separately on their dealer reporting forms; in this rule, NMFS clarifies this reporting requirement. However, NMFS will monitor the situation and may change the conversion factor if appropriate.

Comment 5: NMFS received several comments stating that NMFS should allow fishermen to remove just one pectoral fin, remove all fins except the pectoral fins, allow the removal of fins from species in the SCS complex, and allow vessels operating in the shark research fishery to remove the fins since those vessels would have 100–percent observer coverage. NMFS also received several comments from the State of Florida that NMFS should allow fishermen to remove the tail of the shark at sea and that NMFS should provide fishermen with a diagram depicting the proper way to clean and land sharks with fins attached.

Response: The provision to land sharks with their fins attached allows fishermen to bleed, eviscerate, and remove the head at sea while cutting the fins almost all the way off so that the fins can be folded and the shark can be packed on ice. Authorizing the removal of certain fins or the fins of a specific species, or within a species complex, or from vessels within the research fishery could create additional enforcement problems and complicate compliance. Therefore, NMFS is requiring that all fins remain attached to the carcass through landing for all vessels. Because there are potentially many ways that the sharks may be dressed while leaving the fins attached, NMFS does not believe it is appropriate to provide specific instructions on how to dress sharks because more than one method may be used. NMFS only requires that sharks be landed with their fins naturally attached. Fishermen are allowed the flexibility to dress the shark and tailor the method to their specific operation or dealer requirements, providing they land all sharks with their fins naturally attached.

Comment 6: NMFS received several comments regarding the potential food safety or Hazardous Analysis of Critical Control Point (HACCP) concerns if shark fins cannot be removed until the shark is landed because it may be difficult to keep the core temperature of the shark at 40 degrees in 90 degree heat. The state of Florida commented that NMFS should test shark meat quality to determine if there is a decrease in quality as a result of regulatory actions.

Response: The Food and Drug Administration (FDA) published regulations (December 18, 1995; 60 FR 65092) mandating the application of the HACCP principles to ensure the safe and sanitary processing of seafood products. Although these regulations do not apply to fishing vessels or transporters, the processors of domestic seafood must comply with the regulations as it applies to incoming product. Dealers should consult the FDA Center for Food Safety and Applied Nutrition Fish and Fisheries Products Hazards and Controls Guidance for guidance on FDA regulations. The provision to land sharks with their fins attached allows fishermen to bleed, eviscerate, and remove the head at sea while cutting the fins almost all the way off so that the fins can be folded and the shark can be packed on ice. Because the sharks may be dressed and the fins cut almost all the way off the shark at sea before it is packed on ice, the shark should not have to be thawed to completely remove the fins once the shark is landed. In addition, reduced retention limits for non-sandbar LCS should reduce the number of sharks that are landed per trip, therefore decreasing the amount of processing time at the dock. NMFS might conduct tests through the shark research fishery to see if the new fins on requirement affect fish meat quality. However, the results of these tests would be limited in use as the higher retention limits in the shark research fishery could increase processing times and therefore lower meat quality.

Comment 7: NMFS received several comments regarding international cooperation and imports including, 1) NMFS should set a firm shark conservation precedent for the international community, 2) NMFS should not get too far out in front of the international community, and 3) the United States should ban imports of shark fins from countries that do not prohibit shark finning.

Response: The United States has taken an active role in promoting improved international shark conservation and management measures in international fora such as Regional Fisheries Management Organizations (including ICCAT), the United Nations General Assembly, the Convention on International Trade of Endangered Species (CITES), and the Convention on Migratory Species. Consistent with the United Nations Food and Agricultural Organizations' International Plan of Action for sharks, the United States completed and implemented the National Plan of Action (NPOA) for sharks in February 2001. The NPOA calls for data collection; assessment of elasmobranch stocks; development of management measures, where appropriate; research and development of mitigation measures to reduce shark bycatch; and outreach and education. The requirement to land sharks from the U.S. Atlantic Ocean with their fins attached should help raise awareness in the international arena of enforcement issues associated with shark finning bans and the 5–percent fin-to-carcass ratio. NMFS published a proposed rule on April 4, 2008 (73 FR 18473), that would amend the International Trade Permit (ITP) Program to require shark fin importers, exporters, and re-exporters (shark fin traders) to obtain an ITP consistent with ICCAT recommendations. This requirement would provide needed information on shark fin trade participation and would provide NMFS enforcement access to trade records, since the export of shark fins is one of the primary economic incentives for much of the U.S. Atlantic shark fishery.

5. Time Area Closures

Comment 1: NMFS should include the Marine Protected Areas (MPAs) recommended by the South Atlantic Fishery Management Council (SAFMC) in alternative suite 5 because if that alternative were selected, the MPAs proposed by the SAFMC would still need to be implemented.

Response: NMFS decided to include a prohibition on shark BLL fishing in the MPAs in several of the alternative suites in order to ensure that the SAFMC's Amendment 14 prohibition on bottom tending gear would include HMS BLL gear. NMFS needed to implement complementary regulations in order for the MPAs to be effective. Since alternative suite 5 would have resulted in a closure of the entire shark fishery, no shark BLL fishing would occur in the MPAs or elsewhere. Thus, NMFS did not need to include a prohibition on shark BLL fishing in MPAs in alternative suite 5.

Comment 2: NMFS received a number of specific comments regarding the MPAs recommended by the SAFMC, including: 1) coordinates of MPAs — NMFS should provide the correct coordinates for the Charleston Deep Artificial Reef MPA; 2) NMFS should state the specific type of MPAs being implemented (i.e., type II MPAs); and, 3) NMFS should include a transit exemption for vessels traveling through proposed MPAs with BLL.

Response: NMFS is aware of problems with the coordinates provided in the Draft Amendment for the Charleston Deep Artificial Reef and has provided the correct coordinates for the Charleston Deep Artificial Reef in Final Amendment 2 to the Consolidated HMS FMP. In the Draft EIS, NMFS described the MPAs as type II MPAs according to the language used in the SAFMC's Amendment 14. Type II MPAs are areas that are closed to bottom fishing but allow trolling for coastal pelagics and HMS. Since NMFS is prohibiting the

use of BLL gear in these MPAs there is no need to specify the type of MPA in the proposed or final rules. Readers should refer to SAFMC's Amendment 14 for more information on the type of MPAs being recommended by the Council and being implemented by NMFS. NMFS did not implement a stowage provision because very few HMS permitted vessels have historically fished in the MPAs, and the MPAs are generally small in size and can easily be circumnavigated by BLL vessels. If the SAFMC recommends a stowage provision, then NMFS may consider a similar backstop provision in the HMS regulations.

Comment 3: NMFS should implement VMS requirements for the SAFMC Amendment 14 MPAs.

Response: Consistent with SAFMC's Amendment 14, which does not include a VMS requirement, NMFS determined that it was unnecessary to implement a VMS requirement for HMS vessels. NMFS has several other VMS requirements in place for HMS vessels including all vessels with gillnet gear during certain times of the year, BLL vessels in the vicinity of the mid-Atlantic shark closed area, and all vessels with PLL gear on board year-round. To the extent that some of those vessels would fish in the vicinity of the MPAs, NMFS would be able to track their movements. However, most vessels that do not fish with PLL and maintain directed or incidental shark permits in the South Atlantic are not required to have VMS.

Comment 4: NMFS should use the terms ''closed areas'' or ''area closures'' to describe the locations where the proposed regulations apply to avoid confusion on the intent of the MPAs (since they are for snapper/grouper, and not sharks) and to improve compliance by fishermen. ''Marine protected area'' is not a term used in the Magnuson-Stevens Act. NMFS should clarify how and why closures for fisheries management are part of the official MPA classification system.

Response: NMFS chose to use the term Marine Protected Area or MPA because that is the specific language provided in Amendment 14. Although the intent of the MPAs is to protect snapper grouper species, using nomenclature in this final rule that differs from that used to refer to the closures in Amendment 14 may create confusion. As a result, NMFS is referring to the closures in the same way as the SAFMC.

Comment 5: NMFS should prohibit the use of longline gear in existing and new MPAs. The overall amount of bycatch within MPAs may not be minimal when considered in the context of the relevant MPA and the number of species and individuals found within the MPA.

Response: NMFS is prohibiting the use of BLL gear in all of the preferred SAFMC MPAs because those are the areas the SAFMC has determined to be important for certain grouper species that are sometimes caught incidentally on shark BLL gear.

Comment 6: The ASMFC Spiny Dogfish and Coastal Sharks Management Board would like NMFS to reconsider the closures off of North Carolina. Specifically, the Board asks that the duration of the closure be reduced to run from January 1 – May 14. This request is based on the Coastal Sharks Technical Committee's recommendation for a state water closure from May 15 through July 15 from Virginia to New Jersey. This state water closure is designed to protect large adult female sandbar sharks when they are on the pupping grounds. The closure off of North Carolina was designed to protect juvenile sharks in the nursery area during the winter; however the majority of the small sharks have migrated out of that area by mid-May.

Response: The mid-Atlantic shark closed area was implemented to protect juvenile sandbar sharks and all life stages of prohibited dusky sharks. Survey data collected from the NOAA fisheries research vessel Delaware II from April through May 2007 indicate that the majority of sandbar sharks caught in the mid Atlantic shark closed area were juvenile (56–percent immature vs. 44–percent mature). Therefore, maintaining the mid-Atlantic closed area should continue to reduce the number of interactions of BLL gear with sandbar and dusky sharks as well as reduce the number of interactions with immature sandbar and dusky sharks. This will provide positive ecological benefits for both of these overfished shark stocks. Furthermore, measures implemented by the ASMFC are not yet finalized. Once finalized measures are in place, NMFS may consider taking additional action to complement state measures. Implementing these measures before they are finalized and implemented in the ASMFC Coastal Shark FMP could result in inconsistent management measures.

Comment 7: The SAFMC and the South Carolina Department of Natural Resources support the MPAs and maintaining the current time/area closure as proposed in the draft amendment.

Response: This final action will implement the MPA provisions in Amendment 14 and maintain the current time/area closure.

6. Reporting

Comment 1: NMFS should take action to ensure that fishermen report their landings correctly and honestly as most fishermen do not currently provide accurate reports.

Response: The regulations require fishermen to submit accurate and truthful reports on their fishing activities. NMFS can and does verify logbook reports and catch rates with observer reports, as needed. If fishermen and/or dealers choose not to abide by the regulations, then they may face enforcement action.

Comment 2: NMFS received many comments on the dealer reporting timeframe, including: NMFS should consider stronger restrictions on dealer reporting; NMFS should allow two-weeks for dealer reports to be submitted; 10 days is acceptable for the report to be postmarked, but not for NMFS to receive it; NMFS should consider more frequent reporting; NMFS should consider 24 hour reporting for shark dealers; NMFS should consider electronic reporting for dealers (once a week); dealers still need to be able to fax reports; more frequent reporting is not needed. NMFS should take action against dealers that are not reporting; NMFS should not renew a dealer permit if they don't report on time; making reports ''received by'' will not allow fishermen to know if NMFS got their report on time; and NMFS should provide confirmation numbers when dealer reports are received.

Response: NMFS prefers to require dealer reports be received within ten days of the end of the reporting period at this time because a ''received by'' requirement can be tracked by NMFS, the dealers, and enforcement more easily than a ''postmarked'' requirement. NMFS is concerned about dealers that are not reporting and is working with the Office of Law Enforcement to pursue shark dealers who do not meet their reporting obligations. Additionally, given recent issues with dealers not realizing that substantial landing reports were not received by NMFS, NMFS feels that requiring reports to be ''received by'' a certain day will aid in ensuring all reports are received by NMFS in a timely manner. The final action does not require twenty-four hour reporting because such reporting would result in an unduly increased reporting burden for shark dealers at this time. NMFS may consider additional modifications and/or adjustments to reporting frequency for future implementation.

NMFS is currently capable of accepting electronic reports from some dealers who have access to that data system in the Southeast Fisheries Science Center and faxes of shark dealer landings. NMFS does not issue confirmation numbers when shark dealer reports are received; however, submitting dealer reports by FAX or electronically includes a date/time stamp in addition to whether the transmission was successful or not. Shark dealers may also consider using certified mail to provide verification that the correspondence was received.

Comment 3: NMFS should be more proactive and contact dealers as the quotas fill up.

Response: Significant overharvests in the shark fishery in recent years have occurred because shark dealers were not submitting their reports, or verifying that their reports were received by NMFS in the time period required by NMFS regulations. NMFS is working to ensure better compliance with its reporting regulations by encouraging shark dealers to report on time or face possible enforcement action for failing to do so.

Comment 4: Does NMFS have a specified time within which it must turn around dealer reports?

Response: NMFS provides shark landings reports, by complex or species, on a frequent basis to ensure participants are aware of catches in the shark fishery. NMFS does not have a specified time frame as to when it provides landings reports; however, efforts are being made to provide more frequent shark landings updates in light of the final action to close seasons when a species/complex quota has reached 80–percent of their quota.

Comment 5: NMFS should stick to its existing reporting system rather than create a new one.

Response: NMFS will not institute a new reporting system for shark dealers or fishermen in this final rule.

Comment 6: NMFS should not allow sharks to be listed as unclassifieds and, if dealers continue to report unclassifieds, they should have their permits revoked. Unclassified sharks should not be counted against the sandbar shark quota because the sandbar shark quota for the research fishery is already miniscule.

Response: Current regulations require that all sharks landed be identified and reported at the species-level. This final action adds language to clarify this requirement. While reporting sharks as ''unclassified'' violates the regulations, and NMFS has recently completed shark identification workshops to improve shark dealers' identification skills, NMFS must account for unclassified shark landings to produce timely and accurate shark landings reports and because this data is used in stock assessments. Under this final action NMFS will use species composition data from the observer reports outside the shark research fishery to determine which proportion of unclassified sharks should be deducted from the appropriate quotas (i.e., sandbar, non-sandbar LCS, SCS, and pelagic sharks). This methodology is consistent with how unclassified sharks are treated in stock assessments. Shark dealers that continually report sharks as unclassified will be reported to NOAA Office of Law Enforcement and may face enforcement action.

NMFS proposed counting all unclassified sharks from shark dealer reports as sandbar sharks to provide dealers with an incentive to identify sharks to the species level because if the quota for sandbar sharks were filled, they would no longer be able to purchase sandbar sharks. However, NMFS believes that allocating landings to the appropriate complex/species based on observer data is a more accurate means of accounting for unclassified landings. Furthermore, NMFS is concerned that counting all unclassified sharks as sandbar sharks may result in the shark research fishery closing prematurely.

Comment 7: NMFS received a comment stating that a dealer had inadvertently reported all sharks landed in the past as sandbar sharks and that they knew of no dealers that identify sharks at the species level.

Response: All dealers are required to report shark landings at the species level. NMFS instituted a requirement to attend shark identification workshops to assist dealers in properly identifying sharks in order to obtain more accurate landings data.

Comment 8: NMFS received a comment wondering how the stock assessments can use the dealer data because of the lack of species-level landings data for sharks.

Response: Many dealers do report at a species-specific level. However, not all do. Thus, stock assessment scientists assign unclassified sharks to a species/complex group based on species composition data from the observer program. Regional and temporal species composition data attained from observed trips are summarized and applied to the unclassified sharks to estimate the proportion that should be assigned to respective quotas and complexes.

Comment 9: NMFS received a comment in support of the workshops for shark identification because dealers have observed a drastic reduction in the number of sharks that are not being identified properly.

Response: NMFS is encouraged by the results of the shark identification workshops for dealers. Better shark identification should lead to more accurate landings data, which should improve the quality of data used in stock assessments.

Comment 10: NMFS received several comments on the ''dealer'' definition (i.e., who is required to have a dealer permit), including: NMFS should provide the current definition of a shark dealer; the current definition is satisfactory; the proposed dealer definition is appropriate; the first receiver cannot be the shark dealer; an intermediary on land is needed solely for transport; and, the definition should take into account multiple transfers.

Response: The current definition of a shark dealer is a person that receives, purchases, trades for, or barters for Atlantic sharks from a fishing vessel of the United States (50 CFR 635.4(g)(2)). When NMFS implemented the shark identification workshops, many dealers were confused as to whether they needed to attend a workshop because they buy sharks from another dealer, who buys sharks from a fishing vessel. Because the sharks originally came from a fishing vessel, these secondary dealers had obtained a shark dealer permit. To clarify who needs to attend the workshops and to aid enforcement, this final action modifies the definition of shark dealers and is modified from the proposed definition based on public comments. Specifically, the final action clarifies that shark dealer permits are required only for ''first receivers.'' The definition of a ''first receiver'' at 50 CFR 635.2 is ''entity, person, or company that takes, for commercial purposes (other than solely for transport), immediate possession of the fish, or any part of the fish, as the fish are offloaded from a fishing vessel of the United States, as defined under § 600.10 of this chapter, whose owner or operator have been issued or should have been issued a valid permit under this part.''

Comment 11: Can federally permitted dealers buy state landed sharks? Do federally permitted dealers have to report state landings?

Response: The current regulations at 50 CFR 635.31(c)(4) state that federal dealers may purchase a shark only from an owner or operator of a vessel that has a valid commercial federal permit for shark, except that federal dealers may purchase a shark from an owner or operator of a vessel that does not have a commercial federal permit for shark if

that vessel fishes exclusively in state waters (i.e., no federal commercial shark permit). Federal dealer permit holders must report all sharks landed, including those from state waters, and cannot purchase any sharks, caught in state or Federal waters, once the Federal shark fishing season is closed. Additionally, on May 6, 2008, the Spiny Dogfish and Coastal Shark Board of ASMFC voted to require all state dealers to obtain a federal shark dealer permit. As such, when the ASMFC Coastal Shark FMP is fully finalized and implemented, expected in 2009, state shark dealers from Maine to Florida will be required to obtain a federal shark dealer permit and attend shark identification workshops.

Comment 12: NMFS received a comment questioning the mechanism that requires dealers to report on time.

Response: All federally permitted shark dealers are required to submit a dealer report on a bimonthly basis. Failure to do so could result in enforcement action.

Comment 13: NMFS should implement the strongest possible restrictions to ensure prompt and reliable reporting by dealers, within 24 hours if possible. Landings of 300 to 500–percent of allowable quotas, even if subtracted in subsequent seasons, are simply not acceptable and do not reflect the close attention and precautionary action required to achieve sustainable shark fisheries.

Response: Accountability measures for quota overharvests are necessary. The TAC has been reduced considerably and overharvests are accounted for over time. Importantly, the final action includes closing the fishery for a particular species when 80–percent of the quota is reached with five days notice upon filing in the **Federal Register** in order to reduce the likelihood of overharvests. NMFS will also send out e-mail notices and conduct outreach regarding closures upon filing in the **Federal Register**, giving fishermen five days to be notified of a closure. Reduced retention limits and other effort control measures are expected to reduce fishing mortality in the shark fishery. In addition, under the final action, NMFS is changing the reporting requirements for shark dealers so that shark dealer reports must be received by NMFS within 10 days after the reporting period ends. This will ensure timelier reporting and potentially avoid overharvests.

Comment 14: NMFS received several comments regarding excess shark landings in state waters and NMFS' coordination with various states, including: NMFS should preempt the State of Louisiana or others as necessary pursuant to authority provided in the Magnuson-Stevens Act (section 306(b)) if shark landings in state waters impact Federal shark fishery management; NMFS should recognize that Federal fishermen are catching adults during designated fishing seasons, while state fishermen are catching juveniles all year long; NMFS should allow Federally permitted fishermen to fish in state waters; NMFS should ensure that state waters are closed at the same times as Federal waters to protect juveniles; NMFS should consult with the states in order to manage fisheries better; NMFS should require states to abide by Federal rules; and NMFS should coordinate with the ASMFC.

Response: Pursuant to the Magnuson-Stevens Act, NMFS has jurisdiction to manage fisheries in Federal waters of the Exclusive Economic Zone (EEZ). Landings in state waters are counted against Federal shark quotas because many shark species inhabit both Federal and state waters, and thus make up one population or stock. NMFS includes state landings in stock assessments for coastal sharks. This practice is consistent with quota monitoring and management strategies for many marine species.

NMFS has been working with the State of Louisiana, and other states, to ensure consistent management strategies for sharks in state and Federal waters due to excessive landings that occurred in Louisiana state waters in 2007. In 2007, the State of Louisiana agreed with NMFS to close its state waters when the federal fishery closed during the third trimester of 2007. Additionally, ASMFC recently voted on final management measures for a coast-wide state shark plan for states in the Atlantic Ocean. The final measures included in the ASMFC Coastal Shark FMP are expected to be effective in 2009. Many of the final measures in the ASMFC Coastal Shark FMP are consistent with federal regulations and will require commercial state shark fisheries to open and close with federal openings and closures. The implementation of ASMFC's Coastal Shark FMP could potentially lead to similar measures being implemented in the Gulf of Mexico.

Comment 15: NMFS should provide information in the shark landings update on the percentage of total shark landings that are state and Federal.

Response: Federal dealers must report all landings; however, they are not required to differentiate which landings are purchased from Federal vessels and which shark products are purchased from state vessels (if a Federal dealer also has a state dealer permit). Current reporting requirements make it difficult to determine state versus Federal landings, although NMFS generally does not need to distinguish these landings because all landings are used in stock assessments and are counted against the federal shark quota.

Comment 16: The stock assessment does not take the area inside state waters into consideration.

Response: Stock assessments include both fishery dependent and fishery independent landings and effort data from state and Federal waters.

Comment 17: NMFS should not mandate that all shark fishing stop entirely once the sandbar quota is met.

Response: NMFS will not close both the sandbar and non-sandbar LCS fisheries if either quota is met. Rather, NMFS will close the sandbar and non-sandbar LCS quota, individually, if either fishery reaches 80–percent of its respective quotas.

Comment 18: The State of Florida supports decreasing the length of time it takes to supply NMFS with landings information used to manage the shark fishery. NMFS should also decrease the time it takes to make this information available to the public. The time required for NMFS to process such information should be established in a rule.

Response: NMFS makes every attempt to provide timely reports of shark catches to constituents on a frequent basis in order for fishermen to plan their activities accordingly. However, it is also necessary to ensure that shark landings data are accurate prior to making them available to the public. NMFS will attempt to provide more frequent shark landings updates in the future.

7. Seasons

Comment 1: The change to one commercial season would lead to derby fishing.

Response: NMFS believes that a commercial season that opens January 1 and remains open until 80-percent of the quota is achieved, coupled with the significantly reduced retention limits for directed permit holders, should adequately prevent derby fishing. Derby fishing is more likely when seasons are shorter in duration, and when retention limits are large enough to encourage targeting of a specific species. The final action results in one season, opening January 1. Additionally, the season is expected to remain open for most of the year as fishermen outside the research fishery are not expected to make trips targeting non-sandbar LCS because of reduced retention limits and the

prohibition on the retention of sandbar sharks.

Comment 2: NMFS received several comments including a comment from the State of Florida regarding the proposal to open shark seasons on January 1, including: NMFS should consider the fact that not all shark species are present in all regions in equal abundance on January 1; July may be a more appropriate time to open the season; January 1 may be good for sandbar sharks but not other species; opening the season at another time may result in the quota being filled before sharks arrive in some regions; the season should be opened on January 1.

Response: NMFS is aware of the fact that sharks are migratory and present in different areas, at different levels of abundance, at different times of the year. In this final action, NMFS will only allow landings of sandbar sharks by a limited number of vessels selected to participate in a shark research fishery. Therefore, only vessels participating in this fishery will be authorized to target sandbar sharks, and only when a NMFS-approved observer is on board. Vessels outside the research fishery would be allowed to keep 33 non-sandbar LCS for directed permit holders and 3 non-sandbar LCS for incidental permit holders. NMFS anticipates that this reduced retention limit will likely result in directed shark fishermen no longer targeting non-sandbar LCS outside the research fishery. Rather, shark fishermen would be authorized to keep non-sandbar LCS incidentally caught while targeting other species. Given that fishermen outside the research fishery are not expected to target non-sandbar LCS, NMFS expects that the shark seasons would be open longer, and fishermen in the regions that have non-sandbar LCS present later in the year would still be able to harvest non-sandbar LCS when they are present. In addition, opening the season on January 1 should allow the shark fishery to overlap with open seasons for other non-shark species and may reduce regulatory discards that may occur as a result of keeping the shark season closed until later in the year.

Comment 3: NMFS received numerous comments, including comments from the ASMFC and the State of Florida that NMFS should open the season in July instead of January 1 so the season would be open when sharks are present in all areas and to prevent fishing mortality during shark pupping season. Other comments included: NMFS should not allow shark fishing during April, May, and June as these months are when shark pupping occurs and state waters should be closed from May 15 through July 15 to protect pupping; considering the size of the quota, shark migration patterns, and the ASMFC closure, it is likely that the quota would be harvested before sharks become available to fishermen in the North Atlantic; beginning the fishing season on July 16 would allow the quota to be shared geographically; opening the fishing season in July would reduce mortality of pregnant females and ensure that northern states have access to the fishery.

Response: Opening the season on January 1 and keeping it open until 80–percent of a quota is achieved may result in pregnant or neonate sharks being landed along with other sharks. However, given the low retention limits for non-sandbar sharks outside the research fishery and because fishermen will not be allowed to retain sandbar sharks outside the research fishery, NMFS expects that fishermen with directed shark permits outside the research fishery will no longer target non-sandbar LCS. This should reduce overall shark mortality, including mortality of pregnant females during pupping season. The retention limits should also allow fishermen to keep non-sandbar LCS that they catch while targeting other species. If the season is closed from April through June or July, vessels that land sharks while targeting other species will have to discard all sharks. The ASMFC is implementing a Coastal Shark FMP for sharks in state waters from Maine through Florida. Since most shark pupping occurs in state waters, NMFS feels the ASMFC plan may be more appropriate for addressing fishing mortality of pregnant females or neonate sharks. However, now that the ASMFC plan is expected to be implemented in 2009, NMFS may modify the season closure in the future as a result of the ASMFC shark plan.

Comment 4: NMFS should provide more advance notice of season openings because fishermen have had a hard time planning how much bait they need to buy, planning for freezer spaces, etc.

Response: NMFS must complete proposed and final rulemaking prior to the establishment of shark seasons. Under any final action establishing an annual shark season, NMFS will open the fishing season on or about January 1 of each year (except 2008). The season will likely remain open longer than usual, dependent upon available quota. Rulemaking in the **Federal Register** prior to the opening of the subsequent season's start date (on or around January 1) will provide the available quota, retention limits, and other pertinent information.

Comment 5: NMFS should implement one shark fishing season.

Response: NMFS is implementing one season, starting January 1 each year. This date is more likely to overlap with open seasons for other BLL and gillnet fisheries, and also provides fishermen a full calendar year to harvest available quota.

Comment 6: NMFS should ensure that smaller amounts of shark are consistently available throughout the year to help increase the price and marketability of sharks since restaurants would know they could count on it year round. Currently, with such short seasons, there is not really a market.

Response: Short seasons under existing trip limits may quickly flood markets, depressing prices for some shark products, particularly shark meat. Shark meat prices are more likely to be affected by the short seasons because there is less demand for shark meat than for shark fins. The majority of shark fins are exported to other countries and prices for shark fins tend to remain higher and more stable than shark meat. In the past, fishermen with directed shark permits were able to make profitable trips exclusively for sharks. Reduced retention limits and prohibition on retaining sandbar sharks outside the research fishery should reduce the likelihood that fishermen will make trips targeting non-sandbar LCS outside the research fishery. Rather, fishermen are more likely to harvest non-sandbar LCS incidentally while targeting other species. NMFS expects that a fishing season that opens on January 1 each year with lower retention limits will result in smaller quantities of shark product being available for a larger proportion of the year. This could conceivably increase demand and marketability of shark products because the availability of meat and fins would be more reliable throughout the year compared to the past when shark seasons were only open for short periods of time. This increased demand for shark products on behalf of wholesalers may translate to elevated prices received by shark fishermen for shark meat and fins.

Comment 7: NMFS should elaborate on the reasons that trimesters were originally implemented for the commercial shark fishery. Trimesters may still be necessary to reduce fishing mortality.

Response: Trimesters were originally implemented as a way to increase the availability of shark meat throughout the year while also reducing fishing mortality during peak pupping seasons and addressing other bycatch concerns. This final action implements significant

measures to reduce fishing mortality of sharks(predominantly by modifying quotas, retention limits, and species authorized to be landed in commercial and recreational fisheries) and also implements measures that are expected to result in small amounts of shark meat to be available in the markets year-round.

These final measures should reduce the mortality of pregnant females. Furthermore, the closed area off the coast of North Carolina, which is important habitat for dusky and sandbar sharks, will continue to be in effect. NMFS does not expect that fishermen will be able to make a profitable trip ''targeting'' sharks with the preferred retention limits and because of the fact that sandbar sharks may not be possessed outside the shark research fishery. The resulting incidental fishery will likely translate into significant benefits to shark populations as a whole while also eliminating the need to maintain trimesters.

Comment 8: Closing the season when landings reach the 80–percent threshold should be sufficient, but can the other 20–percent of the quota be filled in five days? NMFS should consider closing the shark fishery at 90 to 95–percent of the quota and consider re-opening a season if the quota has not been caught for a given season.

Response: NMFS requested public comment specifically on setting 80-percent as a threshold for closing the fishery because it allows a substantial percentage of the allowable harvest to occur, yet allows a sufficient buffer to prevent overharvest from the time the 80-percent is reached until the time NMFS can actually close the fishery. NMFS' goal is to allow fishermen to harvest the full quota without exceeding it in order to maximize economic benefits to stakeholders while achieving long-term conservation goals and preventing overfishing. Closing the fishery via appropriate rulemaking, while providing at least a five-day notice of a closure (upon filing of the final rule with the Office of the Federal Register and the availability of the final rule for public inspection), should allow fishermen to complete fishing trips that have already been initiated and/or provide fishermen the chance to catch additional quota if they embarked on additional trips prior to the closure. As mentioned previously, the reduced retention limits and the fact that fishermen outside the research fishery will not be allowed to land sandbar sharks is expected to reduce the number of trips targeting non-sandbar LCS and keep the shark season open year-round. Additionally, NMFS must take into account state landings that continue to occur after closure of the Federal fishery.

NMFS believes that, given the two week reporting period for dealer reports and the potential for late reporting, closing the fishery when landings reach 90- to 95–percent of the quota would likely result in overharvests. Overharvests will result in reduced quotas in the future since all overharvests will be accounted for when establishing subsequent seasons and quotas.

Comment 9: NMFS should allow more time prior to closing the seasons. A 5-day notice will not work for PLL fishermen because their trips are long.

Response: PLL gear is not the primary gear-type used to harvest sharks. Most sharks are landed on BLL or gillnet gear on trips that last several days. Fishermen deploying PLL gear generally target tunas and/or swordfish depending on the time of the year and location. Therefore, NMFS does not expect the rulemaking process for closing the shark fishery, which would provide at least a five day notice upon filing of the final rule with the Office of the Federal Register and the availability of the final rule for public inspection, to have adverse impacts on vessels deploying PLL gear. Before the 1999 FMP for Atlantic Tunas, Swordfish, and Sharks, the shark fishery was closed via appropriate rulemaking with five days' notice; therefore, there is a precedent for this amount of time prior to taking action.

Comment 10: NMFS should consider a 3-day warning prior to closing seasons to prevent overharvests, consistent with the notice granted in the bluefin industry. This would better assure that quotas are not exceeded. If NMFS does not decrease the closure time to three days, and instead keeps five days, NMFS should adopt the trigger of 70–percent rather than 80–percent.

Response: In closing the fishery through appropriate rulemaking, NMFS will provide at least a five day notice for closures to maximize the proportion of the quota that fishermen may harvest without exceeding the quota and to allow time for notifying fishermen of a closure. When the final rule is filed with the Office of the Federal Register and available for public inspection, NMFS will send out e-mail notices and other outreach materials to notify the public of the fishery closure within at least 5 days. NMFS anticipates that the notice will publish in the **Federal Register** approximately one day after filing, and then the fishery would officially close no earlier than five days from the original filing date. NMFS believes closing the fishery for individual species or species complexes with at least five days notice upon filing in the **Federal Register** is adequate to prevent overharvests. Historically, shark trips have been 1-4 days. Therefore, a minimum of five days' notice should be adequate because it should give fishermen enough time to complete trips that are already in progress. Significant reductions in retention limits and the fact that fishermen outside the research fishery cannot retain sandbar sharks should also reduce the potential for overharvests in the period between meeting the 80-percent threshold and when the fishery is actually closed a minimum of five days later.

Comment 11: NMFS should predict how long the season should remain open to fill the quota based on past catch rates.

Response: In recent years, seasons have been set based on available quota, past catch rates, and other considerations. Given the final action, NMFS feels that continuing this practice may continue to result in significant overharvests and may not be the best strategy for ensuring that sandbar, dusky, and porbeagle shark populations rebuild. Overharvests in 2006 and 2007 may be indicative of past catch rates not being appropriate indicators of future catch rates because of the fact that in those years, catch rates were greater and the quota was smaller, leading to overharvests. In addition, significant changes in quotas, authorized species, and retention limits would further complicate establishing seasons in advance.

Comment 12: NMFS needs to analyze the length of trips that land sharks and base the time needed to notify the fishery on the length of those trips.

Response: Observer data indicate that most trips targeting sharks last between 1-4 days depending on the region, season, and amount of sharks that are landed. However, this duration corresponds to past retention limits that are being reduced substantially for directed permit holders. Five days was selected as a reasonable minimum amount of time for fishermen to get word about a fishery closure and either finish a current trip without discarding dead sharks, or initiate a trip for another species prior to the closure while keeping the ability to land sharks incidentally. NMFS anticipates that the significant reduction in retention limits and the prohibition on retaining sandbar sharks outside the research fishery will result in most fishermen targeting other species and incidentally landing non-sandbar LCS.

Comment 13: NMFS needs to look at past data to determine whether a 80-percent threshold is adequate to prevent overharvests based on how much quota is caught after the seasons.

Response: NMFS selected the 80-percent threshold for closing the season, with a minimum of five days' notice upon filing of the final rule with the Office of the Federal Register, because it should ensure that the majority of the quota is harvested without exceeding the quota. Giving fishermen the opportunity to harvest most of the quota within a given season is important because the final action carries forward only underharvests for species that are not overfished, experiencing overfishing, or of unknown status.

8. Regions

Comment 1: NMFS received several comments regarding regions. Comments in favor of maintaining three regions under the status quo included: NMFS should assess the impacts of moving to one region; NMFS should describe the rationale for moving to one region; NMFS should not implement one region; having one region ignores the stock assessments and the temporal nature of the fishery; NMFS should implement separate permits, separate fishing zones, and separate quotas, so that fishermen in one zone are not penalized for a quota overharvest that occurs in another zone; the ASMFC requests a minimum of two management regions (Gulf of Mexico and Atlantic States) to ensure equitable and biologically sound geographic distribution of quotas; a one-region plan could reduce or eliminate any quota for Atlantic States if Gulf of Mexico states overharvest; the Gulf States do not have coordinated management and have overharvested in excess of 200–percent in recent years; under one management region, the ASMFC would have reduced or zero quotas for years subsequent to Gulf overharvests.

NMFS also received several comments opposed to maintaining the three regions, including: NMFS should either divide quota equally among regions or have one region since quotas are so low; Gulf of Mexico and South Atlantic stocks should be managed as one unit.

NMFS received numerous comments from Texas Parks and Wildlife, the Gulf of Mexico Fishery Management Council, ASMFC, Mississippi Department of Marine Resources, and members of the general public in favor of maintaining more than one region. Commenters suggested reasons for maintaining more than one region, including: the best scientific evidence available indicates that the Gulf of Mexico and the South Atlantic stocks are separate; genetic evidence has shown separate stocks of some species between the Gulf and South Atlantic; shark management should account for separate stocks and separate the quota accordingly; blacktip sharks are healthy in the Gulf of Mexico; bycatch issues are unique to each region; and, moving to one region ignores stock assessments and the temporal nature of the fishery, which was identified during the previous amendment.

Response: In the Draft EIS, NMFS proposed merging the status quo's three regions into one region to simplify quota monitoring and to prevent derby-style fishing and potential overharvests that could occur as a result of attempting to allocate smaller quotas to regional and trimester seasons. The impacts of establishing only one region instead of three were assessed in the Draft EIS for Amendment 2. The analyses indicated that the overall economic impacts could be negative in regions (i.e., North Atlantic) that do not have sharks present in their waters year-round if the fishery closed early in the year. The ecological impacts of implementing one region were expected to be neutral.

Based on public comment, NMFS has decided to implement two regions, the Gulf of Mexico and the Atlantic, rather than one region as originally proposed. Maintaining two regions has several advantages, including: it adheres to the stock assessment for blacktip sharks which assessed this species separately in the Gulf of Mexico and Atlantic; it accounts for overharvests that occurred in the Gulf of Mexico and Atlantic in 2007 more equitably; it allows for unique quotas to be implemented in each region that account for different species composition in each region; and it maintains the flexibility to implement unique regulations in the Gulf of Mexico and Atlantic Ocean.

The 2006 LCS assessment assessed blacktip sharks as two distinct populations in the Gulf of Mexico and Atlantic. Unique results were found for each population with the Gulf of Mexico population healthy and the Atlantic stock unknown. The assessment recommended maintaining current harvest levels in both regions. NMFS prefers measures consistent with the stock assessment by maintaining two regions: the Gulf of Mexico and Atlantic. The blacktip shark was the only species assessed as distinct, regional populations.

At this time, NMFS does not issue unique permits based on geography within the Atlantic, Caribbean, and Gulf of Mexico. This type of permit was not considered during this rulemaking.

Comment 2: NMFS should have one region because, since NMFS went into regions, we have been going over the quota.

Response: There are several factors that may be the cause of recent overharvests. These overharvests have likely occurred because of increased fishing effort, inconsistent reporting on behalf of the dealers, and the fact that previous years' overharvests are taken off subsequent years' quotas resulting in smaller regional quotas. As quotas decrease and effort stays the same, the likelihood of overharvests increases. The rationale for two regions is provided in response to Comment 1 directly above and elsewhere in the preamble to this rulemaking.

Comment 3: NMFS should describe the original reasoning for establishing the three regions.

Response: The regions were established in regulations implementing Amendment 1 to the 1999 FMP in 2003 because of spatial differences in fishery practices, variable catch-per-unit-effort (CPUE) between regions, and to afford managers the flexibility to adjust regional quotas to reduce mortality of juvenile and pregnant female sharks.

Comment 4: NMFS should create a separate region for the Caribbean.

Response: The Caribbean is currently managed as part of the South Atlantic region. This final action includes the Caribbean in the Atlantic region. Permit data indicate that there are not any commercial shark fishing permits and only one shark dealer permit in the Caribbean region. In addition, NMFS is in the process of initiating rulemaking to address some of the unique aspects of Caribbean fisheries for HMS.

Comment 5: NMFS should change the regions so that the Florida Keys are entirely in the South Atlantic or entirely in the Gulf of Mexico. The State of Florida recommends that the existing regions be maintained, however, both the Gulf and Atlantic coasts of Florida should be kept in the same region to facilitate improved management and enforcement.

Response: NMFS implemented separate regions for the Gulf of Mexico and South Atlantic in Amendment 1 to the 1999 FMP. The existing boundary between the regions was adopted because it is consistent with the boundary defined by the Gulf of Mexico and South Atlantic Fishery Management Councils and by ASMFC. However, since implementing that boundary, NMFS has consistently considered, for quota monitoring purposes, any landings in the Florida Keys to be part

of the Gulf of Mexico region. As such, in this final action and based on the comments received, NMFS is matching practice with the regulations, and is redefining the Gulf of Mexico to ensure that catch near or directly south of the Florida Keys is considered to be within the Gulf of Mexico region. NMFS does not expect this to change fishing practices as logbook data indicates that most fishing in the areas occurs near and within the Florida Keys.

9. Recreational Measures

Comment 1: NMFS should maintain the same standards for recreational and commercial fisheries. Since the commercial industry reports many unidentified or unclassified sharks, the commercial industry should be regulated based on misidentification as well.

Response: The majority of sharks landed commercially are reported as unclassified by shark dealers, not fishermen. NMFS has implemented shark identification workshops for shark dealers which are expected to provide shark dealers with the knowledge and skills to properly identify the sharks that they purchase. Recreational fishermen generally do not see sharks as often as commercial fishermen targeting sharks. Thus, commercial fishermen may be more adept at shark identification.

Comment 2: The preferred alternative would set a bad precedent in allowing a fishery that caused the decline in shark populations to continue on a limited basis, while the public cannot fish for the same shark species. The commercial fishermen should be allowed to catch the same shark species as the recreational fishermen. The ASMFC requests allowing recreational possession/take of all species that may be harvested by commercial fishermen to keep the shark fishery equitable to all sectors and help establish identical species groups.

Response: The final action allows recreational permit holders to possess all non-ridgeback LCS and tiger sharks. These species of sharks have external characteristics that are easy for recreational anglers to properly identify. NMFS proposed to add blacktip, spinners, bull, and finetooth sharks to the list of prohibited shark species in the draft Amendment 2 to the Consolidated HMS FMP. However, based on public comment, NMFS decided to allow recreational anglers to land these sharks. NMFS is allowing recreational anglers to land these species because of extensive public comment that was received in favor of allowing recreational anglers to land these species. NMFS is not authorizing recreational anglers to land sandbar sharks and silky sharks because recreational anglers may confuse these species with dusky sharks, which are on the list of prohibited shark species. NMFS is only allowing participants in the shark research fishery to land sandbar sharks commercially, thus, precluding the vast majority of commercial fishermen from landing sandbar sharks.

Silky sharks are authorized for landing in commercial fisheries because there is a higher likelihood that these sharks may be discarded dead than if they were landed in recreational fisheries. Moreover, commercial fishermen are more adept at distinguishing between silky sharks and sandbar or dusky sharks. Prohibiting silky sharks in commercial fisheries would result in more significant economic consequences than prohibiting them in recreational fisheries because commercial fishermen are allowed to sell the fins and flesh of sharks that are caught in accordance with applicable regulations. There is not a significant targeted fishery among recreational or CHB anglers for spinner sharks, therefore, economic impacts would be less severe among this group of stakeholders.

Comment 3: The recreational and commercial sectors contribute nearly equivalently towards mortality of sharks, and reductions in mortality are absolutely necessary.

Response: NMFS is implementing measures consistent with recent stock assessments to prevent overfishing and/or to rebuild stocks of porbeagle, dusky, and sandbar sharks. Concurrently, NMFS has decided not to allow increased landings of blacktip sharks in the Gulf of Mexico and Atlantic Ocean. Both commercial and recreational shark landings are included in stock assessments. While commercial fisheries generally comprise the majority of shark landings, recreational landings are also a significant component of overall shark mortality. Additional measures are necessary to reduce fishing mortality on several shark species. Modifications to quotas, authorized species, and retention limits are expected to prevent overfishing and to rebuild overfished stocks. For example, sandbar sharks will only be landed by a small number of commercial participants in the shark research fishery subject to a commercial quota that represents an 80–percent reduction in landings of sandbar sharks compared to previous years. Recreational fishermen will not be able to retain sandbar sharks due to their overfished status and the potential for confusion with prohibited dusky sharks.

Comment 4: NMFS should consider additional alternatives for the recreational industry. The alternative suites contain either status quo or closure of all the recreational fisheries.

Response: The analysis of recreational measures includes more alternatives than status quo and closing the fishery. Alternative suites 2 through 4 in the Amendment 2 to the Consolidated HMS FMP would modify the authorized shark species for recreational fishermen to include those that can be positively identified. These alternatives have been modified in the Final Amendment 2 to the Consolidated HMS FMP to include all non-ridgeback LCS and tiger sharks as authorized species in recreational shark fisheries.

Comment 5: NMFS should describe the data or analysis used to justify the proposed authorized species for recreational fisheries. There is no precedent for ''easily-identifiable.'' NMFS needs to make an effort to educate anglers before assuming they cannot identify what they are catching. The State of Georgia commented that NMFS should only allow sharks without an interdorsal ridge to be landed, thereby improving identification and reducing confusion. The State of Florida indicated that sandbar and dusky sharks can easily be differentiated from many other shark species by the presence of an interdorsal ridge.

Response: NMFS only included shark species that are readily identifiable by recreational participants who may not interact with a large number of sharks and therefore may not be able to accurately identify sharks. NMFS specifically requested public comment on the proposed list to be authorized for recreational participants and has modified the final list as a result. The final measures allow any non-ridgeback LCS, tiger sharks and the current list of pelagic and SCS to be landed by recreational anglers. The absence of an interdorsal ridge and/or the distinctive black vertical stripes on tiger sharks should allow recreational anglers to determine if a shark may be possessed or not. NMFS intends to disseminate information for recreational permit holders on HMS regulations and external characteristics for positive identification of authorized shark species.

Comment 6: The recreational fishery should be subject to 100 percent observer coverage.

Response: Recreational permit holders can request to take an observer onboard to monitor fishing activities; however, they are not required to carry observers.

Observers are placed on commercial fishing vessels as a requirement of the biological opinion for the shark fishery, to verify logbook and dealer reports, and to aid managers in understanding the fishery. To date, the biological opinion issued under the Endangered Species Act for the shark fishery has not required observer coverage in the recreational fishery. In addition, recreational fishing vessels are not required to obtain a U.S. Coast Guard safety inspection, which is a requirement for placing observers on commercial vessels to ensure that the vessels have all the required safety equipment. As such, it is difficult to place observers on recreational vessels.

Comment 7: NMFS received several comments regarding outreach efforts on shark identification to the recreational sector, including: NMFS should release an identification guide similar to the Rhode Island Sea Grant guide; recreational fishermen care about positive identification; NMFS should send all permit holders the $20 shark identification book instead of shutting down the fishery; NMFS should explore identification workshops for recreational fishermen; NMFS needs to find better ways to educate the public to ensure positive identification; NMFS should use educational tools to improve identification; and, recreational fishermen may confuse porbeagle sharks with shortfin makos.

Response: In 2003, NMFS, in conjunction with Rhode Island Sea Grant, released a guide to Sharks, Tunas, and Billfishes of the U.S. Atlantic and Gulf of Mexico. While the guide is currently out of print, additional copies are being printed and should be available by late summer. Additional materials containing similar information are currently available at: *http://seagrant.gso.uri.edu/bookstore/index.html*.

NMFS is also working on additional outreach materials such as a one page quick identification guide to improve identification and understanding of regulations among recreational anglers. These outreach materials would be either free or available at a low cost to ensure that all permit holders have access to them. NMFS has recently implemented shark identification workshops for shark dealers and other interested members of the public. While not mandatory for recreational anglers, participants in any HMS sector or the general public may attend. These workshops provide anglers, dealers, and commercial fishermen with the ability to properly identify shark carcasses.

Comment 8: NMFS received several comments, including comments from the State of Florida, the State of Mississippi, the Gulf of Mexico Fishery Management Council, Texas Parks and Wildlife Department, South Carolina Department of Natural Resources, and the ASMFC regarding the shark species that should be included on the list of recreationally authorized shark species. Comments included: spinner, silky, bull, and blacktip sharks should be included in the list of species authorized for recreational anglers because fishers are capable of accurately identifying shark species; common thresher sharks should stay on the list of species authorized for recreational anglers; NMFS should not propose restricting recreational anglers from keeping blacktip sharks in the Gulf of Mexico if the stock is not overfished or experiencing overfishing; spinners are not endangered, nor are they depleted; the status of spinner or bull sharks has not been assessed, therefore, prohibiting the capture of blacktip and bull sharks would be an overly risk-averse strategy considering that the status of blacktip sharks (at least in the Gulf of Mexico) is satisfactory; identification is only a problem for species that cannot be identified externally; eliminating the retention of a healthy species of sharks, based on the assumption that they might be misidentified is subjective and is definitely not sound fishery management practice; NMFS is mandated under the Magnuson-Stevens Act (NS 1) to strive for optimum sustainable yield and blacktip status in the Gulf of Mexico is healthy; NMFS' stated reason is concern over angler misidentification with sandbar and dusky sharks, however, these species may be readily identified by their interdorsal ridges; the list is acceptable, except for oceanic whitetip and hammerhead sharks. Do not allow the recreational catch of these two species as scientific studies show they are in decline; allowing the recreational harvest of blacktip and spinner sharks would therefore have no negative impact on sandbar and dusky sharks; silky sharks can be confused with dusky sharks and should remain off the list that recreational anglers may land; NMFS should not prohibit recreational anglers from landing bull, blacktip, bull, spinner, and finetooth sharks because these species represent 37–percent of recreational shark landings off the State of Florida.

Response: The final action will allow recreational anglers to possess all non-ridgeback LCS, including blacktip sharks, tiger sharks, and the currently allowed SCS and pelagic sharks. The presence/absence of an interdorsal ridge and other morphological characteristics, coupled with outreach materials on shark identification for recreational anglers, are likely to reduce the incidence of misidentification in this fishery. Common threshers would also continue to be authorized for landing in recreational shark fisheries as these were not proposed to be prohibited for recreational anglers. NMFS had originally proposed that blacktip and spinner sharks not be authorized in recreational fisheries because the morphological differences between the two sharks are not obvious to anglers who are unfamiliar with sharks, and because NMFS wanted to ensure that recreational anglers were only landing sharks that could be positively identified. Based on extensive public comment in support of being able to land blacktip, spinner, and bull sharks and the ability of anglers to use the interdorsal ridge (or lack of the interdorsal ridge) to more positively identify sharks, the final action allows these sharks to be landed. Further, NMFS will enhance outreach efforts to ensure that recreational shark fishermen are positively identifying the sharks they catch.

Comment 9: NMFS should address the fact that recreational anglers in Delaware, Maryland, and New Jersey are catching lots of pregnant thresher sharks during certain times of the year.

Response: NMFS is concerned about recreational anglers catching pregnant female thresher sharks. Recreational fisheries do not have closed seasons like commercial fisheries; therefore, pregnant females may be caught and possessed by recreational anglers. However, a minimum size limit of 54 inches fork-length and a bag limit of one shark (except bonnethead and Atlantic sharpnose) per vessel per trip should minimize the potential for negative impacts to populations of common thresher sharks. Furthermore, this species may be afforded additional protection by shark tournaments that limit the sharks that may be landed to those that are actually eligible to win a prize category.

Comment 10: NMFS received a comment suggesting that hammerheads may need to be prohibited for recreational anglers because the IUCN considers them threatened and it is not easy to distinguish between scalloped and great hammerhead sharks.

Response: NMFS is not implementing management measures specific to scalloped or great hammerhead sharks in recreational fisheries at this time. NMFS has not yet reviewed stock assessments on these species. A stock assessment has been completed for

hammerhead sharks as a dissertation for a graduate student; however, the assessment has not undergone extensive peer-review which is necessary prior to NMFS making any decisions about or based on the assessment.

The IUCN determined that the scalloped hammerhead is ''lower risk, near threatened'' with an unknown population trend in 1994. In 2001, the IUCN listed great hammerhead sharks as ''endangered'' with a decreasing population trend. The recreational bag limit (1 vessel/day) and minimum size (> 54 inch fork length) should preclude overfishing of the scalloped hammerhead shark species. NMFS intends to improve outreach materials available so that recreational anglers would have the tools necessary to distinguish between scalloped and great hammerheads.

Comment 11: NMFS should consider the impacts of recreational fishing for sharks and its implications on populations. Specific comments received include: shark tournaments since the 1980s are responsible for a 50–percent reduction in dusky sharks and a 35–percent reduction in sandbar sharks; the stock assessment does not say that recreational anglers have a significant impact on the shark stocks; the recreational angling public has a virtually imperceptible impact on LCS because recreational anglers practice catch and release and have very conservative size limitations.

Response: NMFS is aware of the practices of recreational fisheries and their impacts on shark populations. Recreational data have been used in past stock assessments for both sandbar and dusky sharks. Thus, the impact of recreational mortality on shark stocks has been included in these stock assessments. NMFS has implemented a size and bag limit for recreational fishermen to limit effort and protect sharks that have not reached sexual maturity. The Final Amendment 2 to the Consolidated HMS FMP provides recreational landings by species.

Comment 12: NMFS should increase enforcement of recreational regulations because participants are not adhering to the 54–inch minimum size for sharks.

Response: NMFS intends to take steps to improve outreach to recreational shark anglers to ensure that the public is aware of all the regulations in place for recreational shark fisheries.

Comment 13: NMFS should not allow shark tournaments that give monetary prizes. The impacts of such tournaments are unknown and public perception of them is poor.

Response: HMS tournament participants are required to possess the necessary HMS permits, to register their tournaments, submit data if selected, and abide by all HMS and tournament regulations for sharks. The shark tournaments are subject to the recreational shark bag and size limits which are quite restrictive in the recreational fishery (1 shark over 54 inches per vessel per day) and, therefore, it is not likely that the majority of fishing mortality is occurring in shark tournaments. Specific measures concerning tournaments were not proposed, or analyzed, in this rulemaking.

Comment 14: NMFS should not propose that recreational fishermen cannot land sandbars and then account for recreational landings by removing the recreational landings (27 mt dw) in establishing the commercial quota for sandbar sharks.

Response: Accounting for the recreational landings (27 mt dw) between 2003–2005 is necessary to ensure rebuilding of sandbar sharks and that all fishing mortality is within the TAC. Sandbar sharks can be landed in recreational fisheries outside of NMFS jurisdiction (i.e., state waters), could be landed illegally in federal waters, or may die as a result of post-release mortality. If NMFS did not account for recreational and other mortality of sandbar sharks, efforts to prevent overfishing and rebuild sandbar sharks would be compromised.

Comment 15: Why were the effects of Katrina to the Texas recreational industry not analyzed?

Response: Consistent with NS1 of the Magnuson-Stevens Act, NMFS is required to implement management measures to rebuild overfished shark species and prevent overfishing. The impacts to the recreational shark fishing industry as a result of Katrina were not specifically analyzed in this rulemaking. Rather, the impacts of the proposed measures that would affect the recreational shark fishing industry in states impacted by Hurricane Katrina were evaluated.

Comment 16: NMFS should require that recreational anglers practice only catch and release and report any and all interactions with protected species.

Response: Alternative suite 5 proposed prohibiting the possession of sharks in both commercial and recreational fisheries, but it was not the preferred alternative because of the adverse economic impacts that would be incurred by these fisheries. The stock status of many shark species does not warrant a requirement to only catch and release all shark species landed recreationally. The bag limit and minimum size requirements are sufficient to conserve shark stocks, and NMFS does not believe a prohibition on landing all sharks in recreational fisheries is warranted at this time.

Comment 17: A typo was made regarding allowable recreational species. On the HMS website copy of the proposed Amendment, the spinner shark was included on the recreational list. On a slide prepared for the public hearings, which was formerly posted on the HMS website, the spinner shark was not included on the recreational list. NMFS should update the draft document on the HMS website so that the commenting public would have access to the proper information necessary to adequately prepare their comments.

Response: The typographical errors in the draft Amendment 2 to the Consolidated HMS FMP have been addressed. An errata sheet describing these errors was posted to the HMS website on November 19, 2007, prior to the end of the public comment period and is available at: *http://www.nmfs.noaa.gov/sfa/hms/sharks/Amendment%202/Errata__Sheet__for__DEIS.pdf*.

Comment 18: NMFS should consider the cumulative impacts on CHB operators who also fish for sharks in light of measures that have been imposed on this industry for other fisheries such as snapper. Snapper business is down 75–percent and proposed measures for the shark recreational fishery are ''the nail in the coffin for CHB''; and, NMFS is violating NEPA by limiting recreational alternatives and through limited cumulative impact analysis by not analyzing impacts such as those caused by red snapper regulations.

Response: NEPA requires all Federal agencies to consider and analyze a range of alternatives to achieve the stated objective and analyze cumulative impacts of proposed actions. NMFS considered the cumulative impacts by analyzing permits that participants held in other fisheries and considering the impacts on those other fisheries. Based on public comment, NMFS is modifying the shark species that can be retained by recreational anglers to include all non-ridgeback LCS and tiger sharks. This modification should allow CHB operators to continue to retain blacktip, spinner, finetooth, and bull sharks which had originally been proposed to be prohibited for recreational anglers due to concerns about anglers' ability to positively identify these species.

Comment 19: Party charter operators have to submit Vessel Trip Reports (VTRs) for every trip. NMFS should look

into those to get a handle on recreational catches.

Response: VTR data were considered for the final rule, however, these data showed only four porbeagle sharks landed by party headboats. MRFSS and LPS are the only databases that NMFS has to track recreational landings. However, for some species, like porbeagle sharks, the timing of these programs do not necessarily capture when porbeagle sharks are caught by recreational fishermen in New England. As such, NMFS is considering ways to improve its recreational landings data collection. NMFS is interested in gathering more shark landings data from tournaments with prize categories for sharks, especially porbeagle sharks.

Comment 20: NMFS received numerous comments, including one from the South Carolina Department of Natural Resources, stating that NMFS should increase the retention limit for Atlantic sharpnose per vessel in the for-hire fishery. Recreational fishermen cannot avoid sharpnose sharks and the recent stock assessment declared that they were not overfished or subject to overfishing.

Response: Modifying the retention limits for Atlantic sharpnose was not considered in this amendment. Measures concerning Atlantic sharpnose sharks and other small coastal sharks (SCS) will be included in Amendment 3 to the HMS FMP based on recent (2007) stock assessments for SCS (May 7, 2008, 73 FR 25665).

10. SAFE Report and Stock Assessment Frequency

Comment 1: NMFS should implement the preferred alternative 9 for SAFE report frequency, which would allow NMFS to publish a SAFE report by the fall of each calendar year.

Response: NMFS is implementing alternative 9, which modifies the existing regulations by requiring the publication of a SAFE report in the fall of each year. This should allow NMFS more flexibility to balance other responsibilities throughout the calendar year, as necessary, and will give NMFS the opportunity to include data for the SAFE report that is typically collected at the beginning of each calendar year.

Comment 2: Within the annual SAFE report, NMFS needs to correctly identify the overfished and overfishing status of every managed shark species by species, rather than by complex.

Response: The SAFE report follows the guidelines specified for NS2 and is used by NMFS to develop and evaluate regulatory adjustments under the framework procedure or the FMP amendment process. Within each SAFE report, NMFS lists the status determination of each stock. If the stock is managed within a species complex, then NMFS would report the status of the complex. For sharks, NMFS does not have the necessary information to conduct separate stock assessments for each species. Therefore, NMFS cannot make species-specific stock status determinations for every species of shark that is commercially harvested. Therefore, those species are managed within a species complex. NMFS is moving towards more species-specific management as available data allows, as is the case with sandbar sharks, which will be managed separately from the LCS complex based on measures implementing the Final Amendment 2 to the Consolidated HMS FMP.

Comment 3: NMFS should implement the preferred alternative 7 for shark stock assessments, which would allow NMFS to conduct shark stock assessments at least once every five years.

Response: Because of the time necessary to modify management measures consistent with stock assessments, NMFS is implementing the preferred alternative 7 and will conduct shark stock assessments at least once every five years. This should provide sufficient time for existing or forthcoming management measures to take effect (i.e., a few years) prior to the next stock assessment.

Comment 4: NMFS received several comments in favor of the status quo for timing of stock assessments, including: NMFS should consider keeping the status quo for the timing of stock assessment for sharks; we are opposed to having an assessment at least once every five years; five years is too long to wait for an assessment; it is critical that stock assessments be regular and robust; NMFS should implement alternative 6, the status quo for the timing of shark stock assessments, with a mandate of stock assessments no less frequently than every 3 years; and, stock assessments should occur at least every 2 to 3 years without any further delays.

Response: Because of the time necessary to modify management measures consistent with stock assessments, NMFS is finalizing measures that increase the amount of time between stock assessments to allow existing or forthcoming measures to be in place and have an effect on the population before the next assessment takes place. In 2003, NMFS adopted the SEDAR process for completing shark stock assessments at the request of industry, environmentalists, and academics. This process increases the time necessary to complete a stock assessment because it entails three workshops where data are reviewed, stock assessment models are run, and results are reviewed by an outside panel. Since this process alone may take over a year to complete, conducting assessments every 2 to 3 years is not practical. Allowing stock assessments to be conducted at least once every five years should allow research suggested by the last assessment to be completed before the next assessment is done, thus providing the necessary data for future assessments. It should also allow management measures, which need to be in place for several years to have an effect, to begin to achieve management objectives before a new assessment is done. For instance, the last stock assessment, which was completed in 2006, included data through 2004. NMFS is currently developing management measures based on that assessment, and those new management measures would be in place 30 days after publication of this rule. If the next stock assessment is conducted in 2009 (3 years from 2006), and includes data up through 2007 or 2008, the new management measures would not have had time to take effect as they would not have been in place for the time series of data used for a 2009 assessment. Decreasing the frequency to at least once every five years would result in the next assessment occurring no later than 2011, which could consider data up through 2009 and data collected under the new management measures.

Comment 5: The Georgia Coastal Resources Division believes that while conducting assessments every 2–3 years is too short for an accurate assessment, conducting stock assessments every five years is also too frequent for the rebuilding timeframes necessary for the concerned species and to evaluate the effects of management.

Response: Alternative 7 changes the current process outlined in the 1999 FMP by requiring stock assessments for sharks at least every five years instead of every two to three years. Stock assessments could occur more frequently; however, according to NMFS' policy adequate stock assessments are required at least once every five years. This timeframe ensures that NMFS can incorporate new data, use the best available data, and test the effectiveness of management measures. Waiting more than five years to conduct an assessment could lead to the need for greater changes leading to more uncertainty in the status of the stock and effectiveness of management.

11. Research Fishery/Preferred Alternative

Comment 1: NMFS should not finalize the proposed preferred alternative suite 4. The sandbar shark quota should be spread over 40 50 vessels making 1–2 trips annually rather than 5–10 vessels making more trips.

Response: The final action strikes a balance between positive ecological impacts that must be achieved to rebuild and stop overfishing on depleted stocks while minimizing the severity of negative economic impacts that could occur as a result of these measures. NMFS intends to address vital research concerns via the shark research fishery. By allowing a limited number of historical participants to continue harvesting sharks, NMFS ensures that data for stock assessments and life history samples will continue to be collected. The final action also allows a small pool of individuals to continue to collect revenues from sharks as they have in the past. Increasing the number of vessels included in the shark research fishery would simply provide a much smaller benefit for a larger pool of individuals. Furthermore, having fewer vessels involved in the research fishery ensures less variation among vessels and also maintains more consistent sampling protocols. Fewer vessels in the research fishery would also allow each vessel to make more sets targeting sandbar sharks throughout the year and within each region rather than a larger number of vessels only making one or two trips in a particular region/season. The selection process will take place each year in order to maximize the number of potential participants.

Comment 2: NMFS received several comments on research fishery vessel selection. These comments included: NMFS should select vessels based on a fisherman's income from the shark industry; NMFS should consider if a fisherman has helped with research in the past and consider whether or not the researchers had a positive experience; NMFS should consider any past violations, and if a vessel is conducive to research (i.e., enough deck space); captains and crew should have an understanding of why the research is being done, an understanding of the costs associated with the research, the ability to fish in multiple regions, and the ability to carry observers; past participation in the observer program and shark fishery should be considered; NMFS should create a point system based on criteria for selection of vessels and if there are more than 5–10 vessels, then a lottery should be used; NMFS should administer the research fishery much like they do the EFP program; the shark research fishery should only include directed shark permit holders; NMFS should increase the number of vessels in the research fishery and decrease the amount of sandbars each vessel may land; observer coverage should still happen within the research fishery; NMFS needs to provide clarification as to how vessels will be selected to participate in the shark research fishery included in the preferred alternative; and who will pick the fishermen for the research fishery?

Response: Applications and permits for the shark research fishery will be administered through the HMS Exempted Fishing Permit program. The HMS Management Division will coordinate with NMFS scientists to determine research objectives. NMFS will publish an annual notice in the **Federal Register** that describes the expected research objectives, number of vessels needed, selection criteria, and the application deadline. Requested information could include, but is not limited to, name and address, permit information, number of expected trips to collect sharks, regions where fishing activities would occur, vessels employed, and gear used. NMFS will review all complete applications and rank vessels according to the ability of the vessel to meet research objectives, fish in the specified regions and seasons, carry a NMFS approved observer, and meet other criteria as published in the **Federal Register** notice. Establishing a point system or a lottery for selection of vessels may be considered as a means of selecting among qualified vessels interested in participating in a shark research fishery. NMFS will include the appropriate types of permit holders in the shark research fishery as determined by the research objectives on an annual basis.

Comment 3: NMFS should allow vessels participating in the research fishery and collecting data to make the most of what they catch.

Response: Non-prohibited sharks landed in the shark research fishery can be sold by fishermen. NMFS-approved observers onboard vessels in the shark research fishery will be authorized to collect any and all samples from any specimens retained during fishing activities to fulfill research goals.

Comment 4: Quota for the research fishery should be equally distributed geographically.

Response: NMFS will consider the geographic distribution of vessels selected to participate in the shark research fishery to reflect traditional participation by vessels targeting sharks and to ensure that data are maintained for future stock assessments. Further, equal geographic distribution will allocate economic benefits to all regions affected by measures in the final rule and ensure that samples are collected from sandbar and other species of sharks throughout their geographic range.

Comment 5: NMFS should clearly state how the quota for sandbar sharks will be calculated.

Response: The sandbar shark quota was determined by the TAC recommended by the sandbar shark stock assessment for the species to rebuild by 2070. The available quota for commercial shark fishermen participating in the shark research fishery (116.6 mt dw) was determined based on the TAC while considering other sources of sandbar shark mortality in recreational fisheries and dead discards that occur in other fisheries. This quota will be reduced to 87.9 mt dw through the end of 2012. Additional detail on these calculations may be found in Appendices A and C of the Final Amendment 2 to the Consolidated HMS FMP.

Comment 6: Is NMFS going to provide flexibility regarding when and where vessels fish?

Response: Research vessels will have some flexibility with regard to timing of trips subject to the objectives and needs of the research fishery. Vessels selected for, and fishing under, the auspices of the shark research permit will be required to take a NMFS-approved observer on all trips. Therefore, observer availability may limit timing of individual trips by vessels. Similarly, NMFS intends the quota available for the shark research fishery to last throughout the year so that samples are collected from vessels fishing in all regions and seasons. As such, NMFS may not place observers on all trips that vessel operators of qualified vessels request to ensure that the sandbar research and the non-sandbar LCS research quotas, neither of which have regions, are available throughout the year. The number of available trips targeting sharks will be dependant on retention limits, success of other vessels targeting sharks, available quota, and other considerations.

Comment 7: NMFS received several comments on research fishery goals and science, including: NMFS should describe its data and research needs; a research plan needs to be developed; a research plan should be devised first before the vessels/fishermen are selected; and the design of the sandbar-oriented research fishery requires scientific input and oversight in order to fulfill a research mission.

Response: The research goals and objectives for the shark research fishery are being developed with NMFS scientists. Research objectives may vary from year-to-year, depending on scientific needs. Several research needs were identified by the peer-reviewers during the LCS stock assessment in 2006 and provide the basis for the shark research fishery goals for 2008, as outlined in the FEIS. Available data on LCS are also presented in the data workshop summary report which is located on the SEDAR website: (*http://www.sefsc.noaa.gov/sedar/Sedar__Workshops.jsp?WorkshopNum'11*). Each year, the objectives will be published and made available to the public in conjunction with the **Federal Register** notice that solicits applications from fishermen interested in participating in the shark research fishery. Research topics may include, but are not limited to: target and bycatch rates using circle and J-hooks with unique bait combinations; sandbar age at first maturity and maturity ogive (which is a description of the proportion of the individuals that are mature at a given age); reducing bycatch rates of protected resources and prohibited sharks; and, life history of coastal sharks.

Comment 8: NMFS received several comments about which permit holders should be able to participate in the shark research fishery, including: the research fishery should include CHB permit holders and NMFS should not allow incidental permit holders to apply for the research fishery.

Response: The research fishery might include any types of HMS permits, including CHB permits, depending on the research objectives for a given year. These objectives, and the types of vessels that will be considered, will be published annually in advance of research activities so that fishermen with the appropriate permits may apply.

Some of the objectives for the research fishery are to continue to collect sandbar shark landings data to ensure consistent time-series data for future stock assessments and to answer specific research questions concerning shark life history and mechanisms to reduce bycatch, among others. Incidental permit holders have contributed to limited landings of sandbar sharks in the past; therefore, some landings data for sandbar sharks from incidental permit holders in the shark research fishery may be warranted.

Comment 9: NMFS should not implement a research fishery because it will take quota away from U.S. fishermen.

Response: Quota will not be taken away from U.S. fishermen as a result of the shark research fishery; however, a reduced quota consistent with the recommended TAC will be implemented in this final rulemaking. All of the available sandbar shark quota will be harvested in the shark research fishery. Interested U.S. fishermen will have the opportunity to apply for, and participate in, this fishery which will allow fishermen to harvest and sell sandbar sharks.

Comment 10: The research fishery should be limited in its first year (maybe 25–percent of the sandbar quota) so NMFS could figure out how the research fishery process would work. For the rest of the fishery, fishermen could then land some sandbars.

Response: There is a limited amount of sandbar shark quota available compared to previous years because NMFS is implementing a TAC and commercial sandbar quota that are consistent with the 2005/2006 sandbar shark stock assessment. Overharvests of sandbar sharks from 2006 and 2007 must also be accounted for, resulting in an adjusted commercial sandbar quota of 87.9 mt dw between 2008–2012. Allocating a small portion of this reduced quota to fishermen outside the shark research fishery would reduce the quota available for the research fishery, limiting NMFS' ability to achieve research objectives.

Comment 11: There is an inconsistency in alternative suite 4 regarding the number of vessels that would be allowed to participate in the research fishery. In Chapter 2, it was stated that ''[NMFS] is not certain regarding the number of vessels that may participate in the shark research fishery'' (pg 2-8), yet in Chapter 4 (pg 4-77), it states ''NMFS scientists and managers would select a few vessels (i.e., 5-10) each year to conduct the prescribed research.''

Response: NMFS is not certain of the exact number of vessels that would be selected for the research fishery. The number of vessels selected depends on research objectives, the number of vessels that qualify to participate in the shark research fishery, and quota available. Inclusion of five to ten vessels in the draft documents associated with the proposed rule provided the public with an estimate of how many vessels may be needed, given historical retention limits and proposed commercial quotas, for the shark research fishery.

Comment 12: The Georgia Department of Coastal Resources supports alternative suite 4 but thinks that unclassified sharks should be grouped as ridgeback and non-ridgeback.

Response: NMFS proposed counting unclassified sharks as sandbar sharks in the draft Amendment 2 to the Consolidated HMS FMP to provide an incentive for shark dealers to properly identify the sharks they purchase to the species level. Since the commercial quota for sandbar sharks is the lowest, NMFS had proposed an approach that would ensure that overfishing of sandbar sharks did not occur by providing an incentive for shark dealers to properly identify what they purchase and not list sharks as unclassified. However, NMFS is concerned that too many unclassified sharks being counted as sandbar sharks may fill the sandbar quota and close the shark research fishery prematurely. NMFS will use observer reports from outside the research fishery to determine species/complex (i.e., non-sandbar LCS, SCS, pelagic sharks, sandbar sharks) from which the unclassified sharks should be deducted. This should result in unclassified sharks being counted from a more appropriate assemblage than assuming all unclassified sharks are sandbar sharks and may result in the shark research fishery staying open for a longer period of time.

Comment 13: NMFS should implement alternative suite 4 because it will greatly improve data collection prior to the next SEDAR for LCS. It will help re-analyze the life history of sandbar sharks, especially.

Response: NMFS prefers alternative suite 4 because it implements a shark research fishery that should provide a limited number of fishermen with the economic incentive to collect valuable scientific data on sharks for NMFS. NMFS will attain information from this research that will help future stock assessments fill in some of the data gaps that previous stock assessments have identified.

Comment 14: Alternative suite 4 allows fishing to continue for shark species without having adequate information to responsibly do so. NMFS should limit shark fishing activities until the status of remaining (all sharks but sandbar, dusky, porbeagle) sharks has been determined.

Response: NMFS is implementing measures that should reduce fishing mortality of sharks significantly while collecting data for future stock assessments. Without this data, NMFS' ability to conduct future stock assessments would be hampered. Currently, NMFS and other collaborating fishery management entities have completed stock

assessments for all the shark species that have ample data available.

Comment 15: NMFS should not implement a lethal sandbar research fishery. NMFS should implement a tag and release research fishery.

Response: It is not possible to gather all the necessary biological samples, including reproductive organs and vertebrae, without some shark mortality. Commercial fishermen also need some incentive to participate in the shark research fishery as no other compensation would be provided. Therefore, the shark research fishery will allow data collection and the sale of animals collected to reduce dead discards and waste.

Comment 16: NMFS should address bycatch in alternative suite 4. This alternative suite is not adequate to ensure the recovery of depleted sandbar and dusky sharks.

Response: This final action should ensure that fishing effort targeting sandbar sharks and non-sandbar LCS is reduced, consistent with stock assessment recommendations. This reduction in fishing effort should result in reductions in bycatch and target catch. Landings of sandbar sharks are expected to decrease by 80–percent. Discards of dusky sharks are expected to decrease by 74–percent. Modifications to retention limits, quotas, and authorized species in commercial and recreational fisheries are expected to decrease bycatch and landings of target species to a level that is consistent with recommendations of the 2005/2006 LCS stock assessment and provides a mechanism for rebuilding of sandbar and dusky sharks.

Comment 17: Alternative suite 4 could shift effort to SCS and pelagics.

Response: Fishing effort directed at SCS and pelagics may increase; however, these quotas are traditionally not fully utilized and are not being modified at this time with the exception of porbeagle sharks. The commercial quota for porbeagle sharks is being established, based on historical commercial landings, to prevent fishing effort from increasing while the stock is being rebuilt. Should fishing effort increase to the extent that the best available science indicates overfishing is occurring or stocks are overfished or approaching an overfished condition, NMFS will take additional action.

Comment 18: The management measures in alternative suite 4 will not adequately prevent the quota overharvests that have historically occurred within this fishery.

Response: Maintaining 100–percent observer coverage in the shark research fishery should enable NMFS to monitor landings in the shark research fishery in near real-time, reducing the likelihood of overharvests. Reducing retention limits outside the research fishery should reduce the number of non-sandbar LCS individual vessels may land each trip, which should prevent directed permit holders from targeting non-sandbar LCS. Instead, directed permit holders are anticipated to incidentally land non-sandbar LCS while they target other species. These measures, coupled with the fact that sandbar shark retention will be prohibited outside the research fishery, may reduce the number of overall trips landing sharks. Lastly, ensuring that shark dealer reports are received by NMFS within ten days of the 15th or 1st of every month should provide NMFS with the ability to provide more frequent landings updates and close the fishery if necessary to avoid overharvests.

12. Comments on Other Alternative Suites and Management Measures

Comment 1: NMFS received several comments on the status quo alternative (alternative suite 1), including: NMFS should maintain the status quo; and NMFS should implement different measures because the status quo clearly is not working and should be abandoned.

Response: NMFS chose not to select the status quo alternative as the preferred alternative because it does not end overfishing or implement rebuilding plans for overfished stocks as required under the Magnuson-Stevens Act. NMFS is implementing alternative suite 4, with minor modifications based on further analysis and public comment, because it implements quotas and retention limits necessary to rebuild and end overfishing of several shark species. The final action maximizes scientific data collection by implementing a limited research fishery for sandbar sharks with 100–percent observer coverage. It also mitigates some of the significant economic impacts that are necessary and expected under all alternative suites to reduce fishing mortality as prescribed by recent stock assessments. Thus, the final action strikes a balance between positive ecological impacts that must be achieved to rebuild and end overfishing of depleted stocks while minimizing the negative economic impacts that could occur as a result of these measures.

Comment 2: NMFS received several comments on alternative suite 2, including: NMFS should not implement alternative suite 2 because it does not allow ILAP (Incidental Limited Access Permit) holders to land sandbar sharks; NMFS should implement alternative suite 2 with the caveats that porbeagle sharks be authorized for recreational fishermen and sandbars should be allowed on PLL gear; alternative suite 2 is more protective of sandbar sharks than preferred Alternative 4.

Response: NMFS did not prefer alternative suite 2 because incidental permit holders would not be able to land any sharks, which could result in excessive dead discards. There would also be an increased reporting burden for shark dealers, which could result in negative economic impacts for shark dealers.

Under alternative suite 2, porbeagle sharks would be added to the prohibited list for commercial and recreational fishing because porbeagle sharks were determined to be overfished based on the 2005 Canadian stock assessment. In addition, porbeagle sharks often look similar to other prohibited species (i.e., white sharks). Therefore, placing porbeagle sharks on the prohibited species list would prohibit landings and help rebuild this overfished species. It may also stop commercial and recreational landings of other look-alike shark species, such as white sharks, which are also prohibited.

Alternative suite 2 is not more protective of sandbar sharks than alternative suite 4 (the final action). In fact, it could result in more sandbar shark discards compared to alternative suite 4 (43.2 mt dw compared to 13.1 mt dw). In addition, allowing directed shark permit holders to fish for sandbar sharks with PLL gear, especially in the mid-Atlantic closed area, could increase discards and overall mortality of dusky sharks. Thus, sandbar sharks would be prohibited on PLL gear under alternative suite 2 to offer dusky sharks more protection. NMFS estimated that prohibiting the retention of sandbar sharks on PLL gear under alternative suite 2 could reduce dusky discards to 8.6 mt dw per year.

This final action also reduces quotas and retention limits to rebuild depleted shark stocks and end overfishing of several shark species, while minimizing regulatory discards. In addition, the final action should allow for the collection of fishery dependent data for future stock assessments and biological samples for shark research, while also allowing a few shark fishermen to continue to fish and generate revenues from shark landings as they have in the past.

Comment 3: NMFS received several comments regarding alternative suite 3, including: NMFS should support a year-round incidental fishery where all participants could keep a few sharks

(including sandbars) to avoid dead discards; NMFS should eliminate the directed shark permit; if NMFS allowed a bycatch industry only, prices for meat might increase because there would be a consistent quantity of sharks year-round; alternative suite 3 is best for retention limits; NMFS should support a revised alternative suite 3 with current reporting requirements and no restrictions for recreational fishermen, except the current species limitations.

Response: Positive ecological impacts would likely be more pronounced for some species under the final action (preferred alternative suite 4) compared to alternative suite 3 because discards should be lower under alternative suite 4. For instance, sandbar discards under alternative suite 3 are estimated to be 23.5 mt dw per year, whereas under alternative suite 4, they would be approximately 13 mt dw. In addition, dusky discards under alternative suite 3 are estimated as 20.4 mt dw, whereas they are only 9.2 mt dw under alternative suite 4. Therefore, NMFS is implementing alternative suite 4 at this time.

Economic impacts under alternative suite 3 would vary depending on permit type. For instance, the retention limits under alternative suite 3 are higher than retention limits for incidental permit holders under alternative suite 4 (the final action), possibly resulting in positive economic impacts for incidental shark permit holders. In addition, under alternative suite 3, incidental and directed permit holders would have the same retention limit. This would presumably remove the difference and value between permit types, which may benefit incidental permit holders, but may be detrimental to directed permit holders. Under the final action, directed and incidental permit holders outside the research fishery would have different non-sandbar LCS retention limits based on permit type. This would allow the distinction and difference in value between directed and incidental permit types to continue. In addition, directed and incidental permit holders outside the research fishery would not be able to retain sandbar sharks. This would most likely result in fishermen no longer directing fishing effort on sharks outside the research fishery, which could have negative economic impacts on these fishermen. However, unlike alternative suite 3, in the final action, there will be a small research fishery, which would allow a few shark fishermen to direct effort on sharks and sell their catch. This research fishery would also allow the continuation of fishery dependent data collection to help with future stock assessments. Therefore, NMFS is implementing alternative suite 4 at this time.

Retention limits under alternative suites 3 and 4 were designed to keep the shark fishery open longer than it has been in the past. This could allow shark products to be available year-round, and possibly avoid gluts in the market, as were experienced in the past when a majority of the shark products were available for a short period of time.

In addition, under alternative suites 3 and 4, NMFS would change the dealer reporting requirements, requiring dealers to mail reports so that they are received by NMFS within 10 days after the reporting period ends. This change should ensure more timely reporting and potentially avoid overharvests. Under alternative suite 3, NMFS considered a list of species that recreational anglers could land; this list did not include blacktip, bull, or spinner sharks because of potential misidentification issues with overfished shark species. However, based on public comment, NMFS is revising this list to allow recreational fishermen to land these species. The diagnostic characteristic for recreational anglers will be the lack of an interdorsal ridge. Recreational fishermen would be allowed to land non-ridgeback LCS plus tiger sharks. This characteristic should allow fishermen to land blacktip, bull, and spinner sharks, but not mistakenly land sandbar or silky sharks, which have an interdorsal ridge and are often mis-identified as dusky sharks. Therefore, given public comment and the revision in the allowable species for recreational anglers, NMFS is implementing alternative suite 4 at this time.

Comment 4: NMFS should not use the economic and historical significance of the directed fishery as a basis for selecting alternatives. NMFS did not prefer alternative suite 3 because ''it diminishes the economic and historical significance of the directed fishery...'' (72 FR 41400).

Response: NMFS did not select alternative suite 3 as the preferred alternative because the available sandbar and non-sandbar LCS quota would have been spread out over all directed and incidental permit holders, providing an extremely limited quota to a large number of fishermen. As described above in the response to comment 3 in this section, NMFS did not think this would be the best approach to rebuild the fishery. In addition, directed permit holders would have had the same retention limit as incidental permit holders, which would have diminished the value of directed shark permits. Under the final action, NMFS is establishing a small research fishery where a small proportion of the directed shark fleet will be able to fish and harvest all shark species, except for prohibited sharks. In addition, NMFS evaluated retention limits of non-sandbar LCS for fishermen operating outside the shark research fishery. NMFS believes it is appropriate to preserve differences between directed and incidental permits and set separate retention limits based on permit type, allowing directed permit holders a higher retention limit than incidental permit holders. This affords directed permit holders, who presumably paid more for their directed shark permit and rely on shark products for a larger part of their income, a higher retention limit than if all permit holders had the same retention limit. Thus, in the final action, NMFS is establishing retention limits of 33 non-sandbar LCS for directed permit holders and 3 non-sandbar LCS retention limit for incidental permit holders.

Comment 5: All permit holders should be allowed to keep incidentally-caught sandbar sharks. NMFS should allow an incidental fishery, year-round, for all commercial permit holders.

Response: NMFS considered an alternative where all fishermen would be able to keep incidentally caught sandbar sharks under alternative suite 3. However, NMFS is implementing alternative suite 4 because it establishes a small shark research fishery where the sandbar quota would be harvested. This research fishery was not proposed under alternative suite 3, which would have compromised NMFS' ability to collect fishery dependent data needed for future stock assessments. This research fishery would allow NMFS to collect scientific data on sandbar sharks that is essential for future stock assessments. In addition, a few fishermen would be allowed to have some economic benefit from the sale of shark products. Spreading the sandbar shark quota among all fishermen with shark permits would not collect the data NMFS needs to produce accurate stock assessments and would result in low retention limits fleetwide. Therefore, NMFS is implementing alternative suite 4, which should end overfishing of depleted stocks while also mitigating negative economic impacts that would occur as a result of these measures.

Comment 6: NMFS received several comments regarding alternative suite 5, including: NMFS should close the shark fishery, considering the poor status of most of the species in the LCS complex, the uncertainty of the blacktip assessment, and the ineffectiveness of

NMFS shark recovery plans to date; a commercial fishery at this time is simply not acceptable; NMFS should support a catch, tag, and release (no finning) fishery only for all shark fisheries; NMFS should not support a commercial LCS fishery because it is not prudent or acceptable; NMFS should just close the sandbar and dusky fisheries; NMFS should be concerned about bycatch; NMFS should keep the Atlantic LCS fishery closed until more is known about these species; NMFS should narrow Alternative 5 to the commercial and large coastal fisheries; and NMFS should consider closing the commercial LCS fishery entirely.

Response: NMFS does not believe that closing the entire shark fishery, or establishing a catch and release only fishery, is warranted at this time. In implementing the final action, NMFS is following the recommendations of these latest stock assessments and taking significant steps in this amendment to rebuild overfished sharks, reduce fishing mortality, and allow shark species to rebuild while minimizing economic impacts and achieving optimum yield. While alternative suite 5 would have the most positive ecological impacts for sharks, protected resources, and essential fish habitat (EFH) of the alternative suites considered in this document, closing the Atlantic shark fishery would also incur unnecessary economic impacts on U.S. shark fishermen, shark dealers, shark tournament operators, and others involved in supporting industries. There are numerous species of shark that are not overfished or experiencing overfishing, such as the Gulf of Mexico blacktip sharks, and, therefore, a full closure of the shark fishery is not warranted at this time. Furthermore, by closing the shark fishery, NMFS would lose a valuable source of fishery dependent data (through logbooks and the shark BLL observer program) and biological samples that are essential for future shark stock assessments. Other alternative suites considered by NMFS would strike a balance between ending overfishing and allowing overfished shark stocks to rebuild and allowing some retention of sharks to meet the economic needs of the shark fishing community.

Comment 7: NMFS should reconsider a ban on BLL gear to reduce landings/mortality of sandbar and dusky sharks. The argument that more participants will transfer fishing effort to the gillnet fisheries for sharks is unpersuasive.

Response: BLL gear is the primary gear used to harvest sharks by shark permit holders and to target non-HMS (i.e., snapper-grouper, reef fish, and tilefish). Many shark permit holders also maintain permits in these other non-HMS fisheries. Banning retention of sharks caught with BLL gear to reduce landings and mortality of sandbar and dusky sharks could result in regulatory discards of sharks because vessels deploying BLL gear in these other fisheries would have to discard all incidentally caught sharks in the pursuit of other non-HMS species with BLL gear. In addition, by banning BLL gear for sharks, sharks could only be harvested by gillnet gear, rod and reel, or PLL gear. Given concerns of protected species interactions in both the PLL and gillnet fisheries, NMFS concluded that it would not be appropriate to redistribute shark BLL effort into these fisheries. Therefore, NMFS is not banning BLL gear for sharks at this time.

Comment 8: NMFS should analyze an alternative suite that banned commercial shark fisheries without restricting the recreational shark fishery to lessen economic impact, overall.

Response: NMFS did not analyze a closure of only the commercial shark fishery, while allowing a recreational shark fishery to continue, due to concerns over equity to different sectors. National Standard 4 of the MSA requires that allocation of fishery resources be fair and equitable to all fishermen. Since shark species that are overfished and experiencing overfishing are caught both in the commercial and recreational fisheries, NMFS considered management measures that applied to both sectors that would help rebuild shark stocks and end overfishing. Additionally, since commercial fishermen may sell shark products where recreational fishermen cannot, closing the commercial shark sector could have the largest economic impact. There are also numerous species of shark that are not overfished or experiencing overfishing, and therefore do not warrant a full closure of the commercial or recreational Atlantic shark fishery at this time. Furthermore, by closing the shark fishery, NMFS would lose a valuable source of fishery dependent data (through logbooks and the shark observer programs) that would limit future shark stock assessments. Therefore, NMFS is implementing alternative suite 4.

Comment 9: NMFS should not establish a small research fishery because it would benefit few and disadvantage most of the shark fishermen. Everyone should get a chance at the quota, either through ITQs, or by having NMFS open up the fishery on January 1 every year and allowing all fishermen to catch sharks until the quota has been filled.

Response: NMFS is implementing the final action to allow for the collection of scientific data with the sandbar shark quota while at the same time allowing a few fishermen to have some economic benefit from the sale of sharks and shark products. Spreading the sandbar shark quota among all fishermen with shark permits would not foster sandbar shark research. While NMFS agrees that ITQs may be beneficial to fishermen, it would take NMFS several years to implement an ITQ system. NMFS is required to end overfishing and implement rebuilding plans for depleted shark stocks under the strict timeframe specified in the Magnuson-Stevens Act. Due to the complexities and time needed to develop and implement ITQs, the time period mandated by the Magnuson-Stevens Act does not allow sufficient time to establish an IFQ or LAPP for sharks. However, NMFS may consider developing an IFQ or LAPP for sharks, as well as other HMS, in the future.

Comment 10: The Georgia Coastal Resources Division requests that NMFS include an alternative that would eliminate gillnets because of their large bycatch.

Response: In the past, shark gillnet fishermen have had 100–percent observer coverage during the Atlantic Right Whale calving season and approximately 30–percent observer coverage during the rest of the year; with observers documenting all bycatch on observed trips. Based on this observer data, compared to other gear types, such as PLL gear, gillnet gear has relatively low bycatch, with finfish bycatch ranging from 1.3 to 13.3–percent and observed sea turtle and marine mammal bycatch of less than 0.1–percent. Given the reduction in trip limits as a result of this amendment, and the four to six vessels that currently use strike or drift gillnet gear for sharks, NMFS does not believe there would be a significant increase in shark gillnet fishing pressure in the future and, therefore, NMFS does not feel it is appropriate to eliminate gillnets as an authorized gear at this time.

Comment 11: None of the suites completely represent the interests of the fishery.

Response: The alternative suites represent a range of management measures derived from scoping and public comment that could be considered based on stock assessments. NMFS assessed the impacts of the alternative suites, reviewed all public comments, and utilized the best available data to make a final analysis. NMFS is implementing alternative suite 4 because it implements quotas and retention limits necessary to rebuild and

stop overfishing of several shark species. Alternative suite 4 maximizes scientific data collection by implementing a limited research fishery for sandbar sharks with 100–percent observer coverage. It also mitigates some of the significant economic impacts that are necessary and expected under all alternative suites to reduce fishing mortality as prescribed by recent stock assessments. Ultimately, the final action strikes a balance between positive ecological impacts that must be achieved to rebuild and stop overfishing of depleted stocks while minimizing the negative economic impacts that could occur as a result of these measures.

Comment 12: We are concerned about wasteful discards under the proposed alternatives. NMFS should encourage responsible and targeted fishing by providing incentives for fishermen who can fish without discards or minimal discards.

Response: NMFS believes that the reduced trip limits (which is approximately one quarter of the current trip limit for directed fishermen under the status quo) and the prohibition on retention of sandbar sharks outside the research fishery will likely result in directed fishermen no longer targeting non-sandbar LCS. Currently, most of the discards of dusky, sandbar, and other shark species come from the directed shark fishery. The only directed shark fishing that could occur under the final action would be within the research fishery. Thus, under the final action where most fishermen would target other species and only incidentally catch non-sandbar LCS, NMFS does not anticipate excessive shark discards. For instance, based on shark BLL observer program data, on average, non-shark BLL trips caught one sandbar shark per trip and 12 non-sandbar LCS. The retention limits of 33 non-sandbar LCS per trip for directed permit holders could allow fishermen to keep incidentally caught non-sandbar LCS as they target other species. In addition, these non-shark trips typically have much shorter soak times (2–3 hours) compared to shark trips (12–14 hour soak times). Thus, it is estimated that most sandbar bycatch could be released alive since they would be released from longline gear in a relatively short period of time.

13. Science

Comment 1: NMFS received several comments regarding the rebuilding timeframe for sandbar sharks stating that NMFS should take a more precautionary approach rather than the maximum rebuilding timeframe of 70 years for sandbar sharks and that NMFS should consider a total ban on sandbar shark landings in all fisheries and an accelerated rebuilding timeframe of 38 years.

Response: The 2005/2006 LCS stock assessment discussed three rebuilding scenarios, including: rebuilding timeframe under no fishing; a TAC corresponding to a 50-percent probability of rebuilding by 2070; and a TAC corresponding to a 70-percent probability of rebuilding by 2070. Under no fishing, the stock assessment estimated that sandbar sharks would rebuild in 38 years. Under the NS 1 guidelines, if a species requires more than 10 years to rebuild, even in the absence of fishing mortality, then the specified time period for rebuilding may be adjusted upward by one mean generation time. Thus, NMFS added a generation time (28 years) to the target year for rebuilding sandbar sharks. The target year is the number of years it would take to rebuild the species in the absence of fishing, or 38 years for sandbar sharks. NMFS determined that the rebuilding time that would be as short as possible for sandbar sharks would be 66 years, taking into account the status and biology of the species and severe economic consequences on fishing communities. This would allow sandbar sharks to rebuild by 2070, given a rebuilding start year of 2004, the last year of the time series of data used in the 2005/2006 sandbar shark stock assessment. Since sharks are caught in multiple fisheries, to meet the rebuilding timeframe under a no fishing scenario, NMFS would have to implement restrictions in multiple fisheries to eliminate mortality, such as entirely shutting down multiple fisheries to prevent bycatch. If NMFS were to shut down the shark fishery completely, such action would likely have severe economic impacts on the fishing community and it would likely result in difficulties for Council-managed and Commission-managed fisheries, which often catch sharks as bycatch. In addition, prohibiting all fishing for sharks would impact NMFS' ability to collect data for future management.

The assessment assumed that fishing mortality from 2005 to 2007 would be maintained at levels similar to 2004 (the last year of data used in the stock assessment was from 2004) and that there would be a constant TAC between 2008 and 2070. Based in part on these assumptions, the assessment estimated that sandbars would have a 70–percent probability of rebuilding by 2070 with a TAC of 220 mt ww (158 mt dw)/year and a 50–percent probability of rebuilding by 2070 with a TAC of 240 mt ww (172 mt dw)/year. As described previously, NMFS is using the 70–percent probability of rebuilding to ensure that the intended results of a management action are actually realized given the life history traits of sandbar sharks.

Comment 2: NMFS received a comment stating disagreement with the science that suggests there is a decline in sandbar sharks because the industry went over their quota by 300–percent in two weeks and therefore shark populations are healthy and abundant.

Response: NMFS used the best available science and a rigorous SEDAR assessment process to make the determination that sandbar sharks are overfished. Recent landings and higher catch rates do not necessarily indicate errors in the stock assessment, or that the sandbar shark populations have recovered. Catch rates alone do not tell the whole story, nor do percentages because they may be a reflection of lower quotas as described in further detail below. Most catch rate series show stable or unclear trends in recent years, but large declines occurred in the late 1970s and 1980s. There has been a commercial quota imposed on the shark fishery since 1993; stable landings in the last decade most likely reflect the effect of a commercial quota, not necessarily a stable population. For instance, commercial catch declined from 162,000 individuals in 1989 to 72,600 individuals in 1993 prior to implementation of the commercial quota. A 300–percent overharvest of LCS does not necessarily mean that more sharks were being caught or that it represents a healthy shark population; rather, it may be the result of significantly reduced LCS quotas due to overharvests in recent years and fishermen continuing to fish at effort levels similar to those set in 2003 and 2004.

Comment 3: NMFS received a comment stating that fishermen/dealers do not properly identify what they are catching, which may have impacted the results of the stock assessment.

Response: Since 1993, species-specific reporting has been required for shark fishermen and shark dealers. However, some fishermen and dealers still report sharks in more general terms as ''sharks'' or ''large coastal sharks''. These unclassified sharks have been problematic for shark stock assessments. Fisheries observers are trained in species-specific identification and report the correct species-level data. Thus, NMFS uses observer data to determine species composition of unclassified sharks for stock assessment purposes. In addition, recognizing that

the accuracy of stock assessments and management can be improved with correct species identification, NMFS established mandatory shark identification workshops for shark dealers in regulations implementing the Consolidated HMS FMP. The objective of these workshops is to reduce the number of unknown and improperly identified sharks reported in the dealer reporting form, and to increase the accuracy of species-specific dealer reported information, quota monitoring, and the data used in stock assessments. These workshops train shark dealers to properly identify Atlantic shark carcasses. NMFS is also developing an identification guide of the authorized species for recreational anglers.

Comment 4: NMFS received a comment stating that 80–percent of the landings in the VIMS dataset were sandbar sharks. The VIMS data says there are no large sandbar sharks. However, we see large adult sandbar sharks all the time, and their size has not changed over time.

Response: The Virginia Institute of Marine Science's BLL survey examines catch rates for the LCS complex and sandbar sharks. This survey has sampled a set of seven stations since 1974. Over this time, the survey has collected over 5,200 sandbar sharks and more than 6,000 LCS. Over the course of the study (1974–2004), both the sandbar shark and the LCS complex showed significant declines, with no signs of recovery for all age classes. Because of a number of factors including environmental changes, the gear used, random sampling scheme used, and experience and efficiency of fishermen, the number of sharks seen by one person or in one year may not be representative of the stock as a whole. The stock assessment included a variety of data sources, which taken together indicated a decline in the sandbar shark population.

Comment 5: NMFS received several comments regarding the results of the 2005/2006 LCS stock assessments, specifically that 1) the science used in the LCS assessment for 2006 was questionable, and the stock assessment needs to be re-done before Amendment 2 is finalized, 2) the science regarding sandbar sharks is flawed, 3) that information/data was left out of the stock assessment, 4) that the stock assessment does not represent the best available science as indicated by the independent stock assessment specialists, and 5) that the specialists raised issues that needed future research.

Response: The 2005/2006 LCS complex, sandbar, and blacktip shark stock assessments were conducted using the SEDAR process. SEDAR is organized around three workshops. The first is the data workshop, during which fisheries, monitoring, and life history data are reviewed and compiled. The second is the assessment workshop, during which assessment models are developed and population parameters are estimated using the information provided from the data workshop. The final workshop is the review workshop, during which independent experts review the input data, assessment method, and assessment products. All of the workshops are open to the public to ensure the assessment process is transparent. The review workshop panel consists of a chair and 2 reviewers appointed by the CIE, an independent organization that provides independent, expert reviews of stock assessments and related work. With regard to the LCS complex assessment, the review panel determined that the data utilized in the assessment were the best available at the time. For the sandbar shark assessment, the review panel concluded that the population model and resulting population estimates were the best possible given the available data. The review panel was also confident that the 2005/2006 sandbar shark assessment produced more reliable estimates of stock status than previous stock assessments because the SEDAR stock assessment resulted in a more thorough review at all stages of the process. For the blacktip shark assessment in the Atlantic and Gulf of Mexico, the review panel determined that the data were treated appropriately, were adequate for the models used to assess the stocks and represented the best estimates of assessment information currently available. As one of the Terms of Reference for the Review workshop, the review panel was asked to develop recommendations for future research for improving data collection and stock assessments. These research recommendations are customary not only during the review workshop but also during the data and assessment workshops and do not imply that the current research used in the stock assessment was insufficient. For a complete review of the documents used in the stock assessment, please visit *http://www.sefsc.noaa.gov/sedar/Sedar_Workshops.jsp?WorkshopNum'11.*

Therefore, NMFS believes that the 2005/2006 LCS complex, blacktip and sandbar shark stock assessments represent the best available science and is not re-doing the stock assessments before implementing management measures in Amendment 2 to the Consolidated HMS FMP. Under the NS1 Guidelines, if a stock is overfished, NMFS is required to ''take remedial action by preparing an FMP, FMP amendment, or proposed regulation...to rebuild the stock or stock complex to the MSY level within an appropriate time frame'' (50 CFR 600.310(e)(3)(ii)). Additionally, ''in cases where a stock or stock complex is overfished, [the] action must specify a time period for rebuilding the stock or stock complex that satisfies the requirements of section 304(e)(4)(A) of the Magnuson-Stevens Act.'' Therefore, consistent with the results of the 2005/2006 LCS complex, blacktip and sandbar shark stock assessment results, the Consolidated HMS FMP and the Magnuson-Stevens Act, NMFS is implementing final management measures to rebuild sandbar, dusky, and porbeagle sharks while providing an opportunity for the sustainable harvest of blacktip sharks and other sharks in the LCS complex.

Comment 6: NMFS received a comment stating that offers from an industry representative to give shark fin data to NMFS were refused and therefore historic fin data must have been left out of the assessment.

Response: NMFS included all data from both the shark fin and carcass landings recorded and submitted by Federally permitted dealers, as required by the regulations at § 635.5(b)(1)(i), in the 2005/2006 LCS stock assessments. In addition, during the data workshop for the 2005/2006 LCS stock assessments, the public, including industry and environmental representatives, were invited to submit data in the appropriate format to be considered for the stock assessment. If the data were not submitted in the appropriate format for assessment scientists to determine the applicability of the data, then they were not included in the assessment. The public will have additional opportunities to submit data during the data workshop at the next LCS stock assessment. This data will be considered for the stock assessment provided that it is submitted in the appropriate format.

Comment 7: NMFS should have used the data from the Oregon II index which showed that the catch per unit effort was increasing.

Response: The NOAA Research Vessel Oregon II data was included in the 2005/2006 LCS complex, blacktip, and sandbar shark stock assessments. The SEFSC's Mississippi Laboratories has conducted standardized BLL surveys from the Oregon II in the Gulf of Mexico, Caribbean and Southern North Atlantic since 1995. The data were

reviewed by the indices working group at the data workshop. This data showed that blacktip shark catch rates, when combined with year, area, and depth as variables, increased in later years in the Gulf of Mexico and were low with breaks in the time series in the Atlantic south of 37°. The sandbar shark catch rates in the Gulf of Mexico and Atlantic, combined with year, area, and depth, stayed about the same over the data time series. This data set was just one of many data sets related to abundance indices included in the 2005/2006 stock assessment.

Comment 8: NMFS received a comment stating that NMFS should have included Mexican data of shark catches in the 2005/2006 LCS assessment.

Response: The 2005/2006 LCS complex, blacktip, and sandbar shark assessments did include detailed estimates of Mexican catches of blacktip and sandbar shark for the period of 1962–2000. Species composition in weight for different sharks taken in Mexican waters was estimated from the data given in several Mexican studies. These were then used to estimate the total weight and numbers caught of each species in each state. In addition, annual estimates from 2000–2004 of illegal catches of LCS from Mexican fishing vessels fishing in the U.S. EEZ were also included in the 2005/2006 LCS stock assessments.

Comment 9: NMFS received a comment stating that NMFS does not need to implement an amendment to the Consolidated HMS FMP until July 12, 2009.

Response: The mandate to rebuild overfished stocks is in section 304(e) of the Magnuson-Stevens Act. The Magnuson-Stevens Act states that for stocks identified as overfished or having overfishing occurring, the Secretary of Commerce or the relevant Council, as appropriate, shall prepare a fishery management plan, plan amendment, or proposed regulations for the fishery to end overfishing in the fishery and rebuild affected stocks within one year of that determination. NMFS satisfied that timing provision: sandbar sharks and dusky sharks were determined to be overfished with overfishing occurring on November 7, 2006 (71 FR 65086), and NMFS published the draft Amendment 2 to the Consolidated HMS FMP on July 27, 2007 (72 FR 41325). NMFS notes that the 2006 Magnuson-Stevens Fishery Conservation and Management Reauthorization Act amended section 304(e) to include a two-year timing provision for preparation and implementation of actions, and the new management measures contained in 2006 Magnuson-Stevens Fishery Conservation and Management Reauthorization Act will be effective July 12, 2009.

Comment 10: NMFS received several comments regarding conflict of interest, including, 1) there was a conflict of interest at the LCS assessment workshop and review workshop; 2) several reviewers were biased against the industry; 3) the stock assessment is fixed to give a particular outcome based on pressures by conservationists, and; 4) there are conflicts of interest between NMFS employees and the American Elasmobranch Society which should invalidate all studies and assessments.

Response: NMFS does not believe that there was any conflict of interest on the part of participants or reviewers in the stock assessment process. The third workshop in the SEDAR process is the review workshop during which a panel of independent experts reviews the input data, assessment methods, and assessment products. This workshop is open to the public. The review workshop panel consists of a chair and two reviewers appointed by the CIE, an independent organization that provides independent, expert reviews of stock assessments and related work. The individuals appointed to the review panel can have no affiliation with any of the affected parties to the assessment, including government, industry, or advocacy groups. The review workshop chair is appointed by the CIE. Two additional reviewers, selected by the Shark SEDAR Coordinator for their expertise in shark stock assessments, were also included on the LCS shark complex review panel. The panel concluded that the data used in the analyses, the assessment approach, and overall conclusions of the assessment were valid. The panel provided no indication that there were any conflicts of interest during the assessment process.

The American Elasmobranch Society (AES) is a non-profit organization that seeks to advance the scientific study of living and fossil sharks, skates, rays, and chimaeras, and the promotion of education, conservation, and wise utilization of natural resources. The Society holds annual meetings and presents research reports of interest to students of elasmobranch biology. Those meetings are held in conjunction with annual meetings of the American Society of Ichthyologists and Herpetologists each year at rotating North American venues. Membership in the AES is open to any person who has an interest in the object of AES. Members of AES include, but are not limited to, representatives from state and federal governmental and non-governmental organizations, and academic institutions. NMFS employees are not restricted from participating in professional societies and, to the extent that participation aids in the collaboration, communication, and peer-reviews in the scientific endeavors of NOAA's mission, employees are encouraged to participate. While participating, employees must differentiate between when they are providing their own personal opinion or when they are acting as a representative of NOAA. Therefore, participation of NMFS employees in AES activities does not necessarily constitute a conflict of interest. In this case, there is no evidence from which NMFS can conclude that a conflict of interest occurred.

Comment 11: NMFS should assess the eleven prohibited LCS species individually and in a public forum and the shark stock assessments should break out all sharks by species, especially bull sharks, scalloped hammerhead sharks, and tiger sharks.

Response: NMFS continues to collect species-specific data in support of species-specific stock assessments. To date, NMFS has conducted individual stock assessments for dusky, sandbar, blacktip, Atlantic sharpnose, finetooth, blacknose, and bonnethead sharks. As additional biological and fishery-related data become available, NMFS will conduct other species-specific stock assessments.

Comment 12: NMFS possessed certain species-specific knowledge regarding blacktip sharks that it failed to produce for the assessment.

Response: NMFS has included all the available data that were presented at the data workshop and has not withheld or failed to produce relevant datasets. NMFS held a data workshop for the 2005/2006 LCS stock assessment that was open to the public and requested that participants, including industry and environmental representatives, submit any relevant data or analysis in the form of working documents. During the assessment workshop, the assessment scientists determined the adequacy and appropriateness of the submitted data to be included in each assessment.

Comment 13: Why did the 2005/2006 LCS stock assessment not assess sandbars as two separate populations, one in the Gulf of Mexico and one in the Atlantic similar to what was done for blacktip sharks?

Response: During the data workshop portion of the LCS stock assessment, the life history working group looked at multiple studies and data sources to

summarize life history information such as stock definition, age, growth size at maturity, and mortality for sandbar and blacktip sharks that was then used in the stock assessments for each species. For sandbar sharks, after considering the available data, the working group decided that the stock definition should be the Western North Atlantic from southern New England to the Gulf of Mexico. Tagging studies suggest that one stock unit exists from Cape Cod south down the U.S. Atlantic coast and into the Gulf of Mexico, extending around the U.S. and Mexican portions of the Gulf of Mexico to the northern Yucatan peninsula. Genetic studies conducted on specimens from Virginia waters and the Gulf of Mexico further support the existence of a single stock that utilizes the area of Cape Cod to the northern Yucatan peninsula. For blacktip sharks, conventional tagging evidence suggests little exchange between the U.S. Atlantic Ocean and Gulf of Mexico. Genetic heterogeneity and female philopatry also demonstrates multiple genetic reproductive stocks among blacktip sharks in the Gulf of Mexico and South Atlantic Bight. Therefore, blacktip sharks were divided into two stocks: an Atlantic stock defined as extending from Delaware to the Straits of Florida, and a Gulf of Mexico stock designated as extending from the Florida Keys throughout the Gulf of Mexico.

Comment 14: NMFS received a comment asking who the peer reviewers were for the 2006 dusky assessment.

Response: In order to preserve the integrity of the independent review process of stock assessments, NMFS does not provide the names of the peer reviewers, including those used for the dusky shark assessment.

Comment 15: NMFS received several comments regarding the continuation of shark data collection once Amendment 2 is implemented, asking how NMFS would conduct stock assessments with no data from fishermen, and stating that NMFS should obtain more data from the fishermen by placing scientists on fishing vessels.

Response: This final action will establish a small research fishery to harvest the entire commercial sandbar shark quota. Vessels operating within the shark research fishery can also retain non-sandbar LCS, SCS and pelagic sharks. These vessels will also have 100–percent observer coverage. Vessels operating outside of the shark research fishery will only be able to retain non-sandbar LCS, SCS, and pelagic sharks. The vessels outside the shark research fishery will continue to be selected for observer coverage. Observers provide baseline characterization information, by region, on catch rates, species composition, catch disposition, relative abundance, and size composition within species for the large coastal and small coastal shark BLL fisheries. NMFS will use observer data as well as logbook and shark dealer data and fisheries independent data to conduct stock assessments in the future.

Comment 16: NMFS received a comment supporting stock assessments that occur in the United States and not those that occur in other countries.

Response: To date, the United States has not conducted a stock assessment on porbeagle sharks. NMFS has reviewed the Canadian stock assessment and found that it made full use of all fishery and biological information available and therefore deems it to be the best available science and appropriate to use for U.S. domestic management purposes. Canada has conducted stock assessments on porbeagle sharks in 1999, 2001, 2003, and 2005. Reduced Canadian porbeagle quotas in 2002 brought the 2004 exploitation rate to a sustainable level. According to the 2005 recovery assessment report conducted by Canada, the North Atlantic porbeagle stock has a 70–percent probability of recovery in approximately 100 years if fishing mortality is less than or equal to 0.04. The Canadian assessment indicates that porbeagle sharks are overfished ($SSN_{2004}/SSN_{MSY} = 0.15 - 0.32$; SSN is spawning stock number and used as a proxy for biomass). However, the Canadian assessment indicates that overfishing is not occurring ($F_{2004}/F_{MSY} = 0.83$). Based on these results, NMFS determined that porbeagle sharks are overfished, but that overfishing is not occurring (71 FR 65086).

Comment 17: NMFS received a comment asking if shark migration patterns have been studied along with sea surface temperatures.

Response: Sea surface temperature is an important physical data parameter that is collected during investigations of shark migration patterns. The data workshop for the 2005/2006 LCS stock assessment included several studies investigating the correlation of sea surface temperature and shark migration patterns. A summary of these studies and reference citations can be found in the SEDAR 11 final stock assessment report available on the HMS website at *http://www.nmfs.noaa.gov/sfa/hms/hmsdocument_files/sharks.htm*.

Comment 18: Does NMFS have an idea of the status of common threshers? It seems that they are abundant.

Response: To date, NMFS has not conducted a species-specific stock assessment for thresher sharks and their status in the Atlantic Ocean is unknown. However, commercial landings data compiled from the most recent stock assessment documents indicate that approximately 307,291 lb dw of thresher sharks have been landed from 2000 to 2005. Recreational landings data obtained from the recreational landings database for HMS indicates approximately 8,000 thresher sharks have been harvested in the Atlantic HMS recreational shark fishery from 1999 to 2005.

Comment 19: NMFS should implement the status quo, Alternative 1, because this is the only viable option for Amendment 2 until the scientific issues that have been raised are addressed and resolved.

Response: As described in response to comments 5 and 10 in this section, NMFS disagrees that the results of the LCS assessment should be put on hold due to concerns raised about the scientific validity and impartiality of reviewers. NMFS has carefully reviewed and considered all public comments received on the assessment and determined that the assessment was appropriate, used the best scientific data available, and is scientifically valid. The 2005 Canadian porbeagle shark stock assessment, the 2006 dusky shark assessment, and the 2005/2006 LCS stock assessment determined that porbeagle, dusky, and sandbar sharks are overfished. Overall, the status quo alternative, which would maintain the current annual LCS quota of 1,017 mt dw, in conjunction with the management measures mentioned above, would have negative ecological impacts on sandbar, dusky and porbeagle sharks, as well as protected resources and marine mammals. The social and economic impacts would likely be neutral because current fishing effort would remain the same in the short term. In the long term, as stocks continue to decline, profits may decrease as costs associated with finding and catching these depleted stocks increases. Management measures are needed to rebuild overfished stocks and prevent overfishing consistent with the mandates of the Magnuson-Stevens Act. Therefore, maintaining the LCS quota of 1,017 mt dw would be inconsistent with the Magnuson-Stevens Act and the recent LCS stock assessment that recommended a TAC of 158.3 mt dw for sandbar sharks in order for this species to rebuild by 2070. Current fishing effort, under the status quo alternative, would lead to continued overfishing of sandbar, porbeagle and dusky sharks, which would prevent these species from rebuilding in the

recommended timeframe. As a result, rather than implementing this alternative, NMFS is implementing the quotas and retention limits necessary to rebuild and stop overfishing of several shark species while maximizing scientific data collection by implementing a limited research fishery for sandbar sharks. The final management measures also mitigate some of the significant economic impacts that are necessary and expected under all alternative suites 2 though 5 to reduce fishing mortality as prescribed by recent stock assessments. The final management measures strike a balance between positive ecological impacts that must be achieved to rebuild and stop overfishing of depleted stocks while minimizing the severity of negative economic impacts that could occur as a result of these measures. By allowing a limited number of historical participants to continue to harvest sandbar sharks within the research fishery, NMFS ensures that data for stock assessments and life history samples would continue to be collected. Directed permit holders not selected to participate in the shark research fishery would still be authorized to land 33 non-sandbar LCS per vessel per trip and incidental permit holders would be authorized to land 3 non-sandbar LCS per trip. This should limit the number of trips targeting non-sandbar LCS sharks; however, it should still afford the opportunity to keep non-sandbar LCS that are landed incidentally, preventing excessive discards.

Comment 20: The stock assessment is flawed because sandbar sharks do not occur west of Mobile, Alabama.

Response: The stock assessment represents the best available science and included all data that was presented at the Data Workshop for the 2005/2006 LCS stock assessment. Included in the assessment are fishery independent shark surveys that were conducted from 1995–2005 from the NOAA Research Vessel Oregon II. The results of that survey can be found in LCS05–06–DW–27. This survey showed the capture of sandbar sharks in the Gulf of Mexico, including west of Mobile, Alabama (see Figure 4 within LCS05–06–DW–27).

14. National Standards

Comment 1: The proposal to prohibit blacktip sharks in the recreational fishery violates NS2 of the Magnuson-Stevens Act because the stock assessment determined that blacktip sharks in the Gulf of Mexico are not overfished.

Response: NS2 requires that conservation and management measures be based upon the best scientific information available. NMFS believes that the 2005/2006 LCS stock assessment constitutes the best available science. The 2005/2006 LCS complex, sandbar, and blacktip shark stock assessments were conducting using the SEDAR process. SEDAR is organized around three workshops. All of the workshops are open to the public to ensure that the assessment process is transparent. The review workshop panel consists of a chair and 2 reviewers appointed by the CIE, an independent organization that provides independent, expert reviews of stock assessments and related work. With regard to the LCS complex assessment, the review panel determined that the data utilized in the assessment were the best available for analysis at the time. For the sandbar shark assessment, the review panel concluded that the population model and resulting population estimates were the best possible given the available data. The review panel was also confident that the 2005/2006 sandbar shark assessment produced more reliable estimates of stock status than previous stock assessments because the SEDAR stock assessment resulted in a more thorough review at all stages of the process. For the blacktip shark assessment in the Atlantic Ocean and Gulf of Mexico, the review panel determined that the data were treated appropriately, were adequate for the models used to assess the stocks and represented the best estimates of assessment information currently available.

In the proposed rule, NMFS proposed an authorized recreational species list that was limited to those species that are easy to identify or that could not be misidentified with other species. NMFS originally proposed to prohibit the retention of blacktip sharks because of the potential for misidentification with spinner sharks, but specifically asked for public comment on the proposed list of prohibited species. As a result, based on public comments received and because blacktip sharks are healthy in the Gulf of Mexico, NMFS is implementing an amended authorized shark species list in the recreational fishery. The amended list is based on readily identifiable characters such as the lack of an inter-dorsal ridge, and allows the landing of non-ridgeback LCS plus tiger sharks. This amended list adds blacktip, spinner, finetooth, porbeagle and bull sharks to the list of authorized species for recreational anglers in all regions.

Comment 2: NMFS violated NS4 of the Magnuson-Stevens Act because the commercial fishery will be allowed to catch their TAC and the recreational fishery cannot catch the same species of sharks.

Response: NS4 requires that conservation and management measures shall not discriminate between residents of different States, not between participants in different fisheries. The commenter is concerned about perceived discrepancies between allocations to the recreational versus commercial fisheries, which is not a NS4 issue. Based on public comments, NMFS is modifying the list of authorized species in the recreational shark fishery to address concerns expressed by certain states that prohibiting blacktip and other sharks would unfairly discriminate against the recreational fishery. This amended list more closely aligns with the authorized species in the commercial fishery. NMFS would continue to prohibit sandbar and silky sharks in the recreational fishery due to concerns of misidentification with dusky sharks and because sandbar sharks are overfished. However, most of the commercial sector will not be able to retain sandbar sharks unless fishermen participate in the shark research fishery. Thus, other than in the shark research fishery, NMFS is prohibiting the retention of sandbar sharks in both the commercial and recreational sectors.

Comment 3: NMFS violated NS8 of the Magnuson-Stevens Act because Port Aransas is a fishing community and was not treated as such in the analysis.

Response: NS8 requires that conservation and management measures shall, consistent with the conservation requirements of the Magnuson-Stevens Act (including the prevention of overfishing and rebuilding of overfished stocks), take into account the importance of fishery resources to fishing communities in order to (A) provide for the sustained participation of such communities, and (B) to the extent practicable, minimize adverse economic impacts on such communities. NMFS recognizes the importance of Port Aransas, TX and numerous other communities as fishing communities. A social impact and community profile assessment was completed for the 2006 Consolidated HMS FMP. While this community profile assessment did not focus on Port Aransas, TX, Chapter 9 of the Consolidated HMS FMP includes an analysis of the State of Texas as a whole and makes note of specific fishing communities within the state that are important to HMS fishing, including Port Aransas, TX. Because this analysis was recently completed, it was not repeated for the Draft EIS for Amendment 2 to the Consolidated HMS

FMP; however, it was referred to in the Draft EIS for Amendment 2 to the Consolidated HMS FMP. The Final EIS for Amendment 2 to the HMS FMP includes a recently completed report by MRAG Americas, Inc., and Jepson (2008) that provides updates to the social impact and community profile assessments for HMS dependent fishing communities. This report can be found in Appendix E and includes Port Aransas.

Comment 4: NMFS violated NS9 of the Magnuson-Stevens Act because all the proposed prohibited species will be released and some will die and, thus, bycatch will not be minimized.

Response: NS9 says that conservation and management measures shall, to the extent practicable, (A) minimize bycatch and (B) to the extent bycatch cannot be avoided, minimize the mortality of such bycatch. The reduced commercial shark quotas and retention limits being finalized in this rule are expected to greatly reduce bycatch of target and non-target species. Because of the reduced retention limits outside the research fishery, it is likely that fishermen will not target non-sandbar LCS. In addition, retention limits under the final management measures are such that fishermen targeting non-shark species should be able to retain incidentally caught non-sandbar LCS. Soak times in non-shark BLL and gillnet fisheries are also much shorter than commercial shark sets; these shorter soak times should increase post-release survival of sandbar sharks. Regulatory discards were taken into consideration when determining the quotas and retention limits of sandbar and non-sandbar sharks both inside and outside of the research fishery. In addition, commercial fishermen using BLL and PLL gear are required to have specified safe handling and release gear on board, which should help release shark bycatch in such a manner as to maximize post-release survival. In the recreational fishery, NMFS is modifying the list of authorized species. This amended list more closely aligns with the authorized species in the commercial shark fishery. NMFS intends to increase educational outreach to the recreational fishing sector to increase shark identification to avoid misidentification with prohibited species. Bycatch in the recreational fishery is also minimized because soak times are considerably less than those in commercial fisheries.

15. Economic Impacts

Comment 1: NMFS should consider an alternative suite that incorporates a ''phase out'' of the commercial shark industry. The present stock situation is untenable. Prolonged rebuilding periods are not acceptable. Managing a minimal yet unsustainable large coastal shark fishery violates NS1 of the Magnuson-Stevens Act. The costs of management far outweigh the benefits to a small number of fishermen who target sharks commercially.

Response: NMFS did consider a suite in the Draft EIS that would have ended Atlantic commercial shark fishing, alternative suite 5. Under this proposed alternative, shark landings would be limited to research and the collection for public display via the HMS EFPs. Recreational fisheries would be catch and release only. However, after careful consideration of the other alternatives, this alternative suite was not selected.

Longer rebuilding periods are allowed under NS1 of Magnuson-Stevens Act when the following conditions specified in the NS 1 Guidelines (50 CFR 600.310(e)(4)(ii)(B)(*3*)):

> [i]f the lower limit is 10 years or greater, then the specified time period for rebuilding may be adjusted upward to the extent warranted by the needs of fishing communities....except that no such upward adjustment can exceed the rebuilding period calculated in the absence of fishing mortality, plus one mean generation time or equivalent period based on the species' life-history characteristics.

NMFS recognizes that the costs of managing the shark fishery relative to the level of future shark fishing activity will be high. However, there are non-monetary benefits associated with maintaining a limited commercial shark industry. These benefits include the ability to continue gathering fishery data, maintenance of industry knowledge regarding shark fishing practices, and other potential cultural and social benefits. The final action attempts to balance the economic needs of fishing communities with the recommendations of recent stock assessments. BLL and gillnet gear will continue to be deployed in other fisheries that interact with sharks. Setting a retention limit that allows fishermen to keep a portion of these fish without targeting non-sandbar LCS should minimize dead discards while discouraging targeting of non-sandbar LCS. Allocating the entire sandbar shark quota to a shark research fishery quota should result in collection of data that could improve future stock assessments and the development of management measures for the fishery.

Comment 2: NMFS received several comments regarding an industry buyout/buyback. These comments include: the environmentalists should fund a buyout of the commercial shark fishery; NMFS should consider a buyout to provide financial relief for the shark fishermen that will be put out of business as a result of the preferred alternative; NMFS should buy all of the directed shark permits for $50,000 to $100,000 because NMFS sold them to fishermen and created this problem; the industry is not in favor of a 5–percent tax to come up with buyout money; a buyout plan aimed at removing longline and gillnet vessels from the shark fishery and other fisheries would reduce fishing pressure, reduce bycatch and protected species interactions, and would address NMFS' concern that further reducing shark landing quotas will result in redistribution of fishing effort into other equally harmful fisheries.

Response: NMFS recognizes that some participants of the Atlantic shark fishery expressed interest in reducing fishing capacity for sharks via some form of buyout program. Buyouts can occur via one of three mechanisms, including: through an industry fee, via appropriations from the United States Congress, and/or funding provided from any State or other public sources or private or non-profit organizations. NMFS cannot independently initiate a buyout. Because NMFS is unable to implement a buyout as a management option, a buyout plan is not proposed in this amendment, despite requests for consideration from the HMS Advisory Panel and other affected constituents.

The shark fishery did develop an industry ''business plan'' that examined options for a buyout, which is further described in Chapter 1 of the Draft EIS.

Comment 3: NMFS should look at data on the number of commercial permit holders by state and the socio-economic impacts of the proposed measures on these fishermen.

Response: NMFS examined the number of commercial permit holders by state. This information was presented in Table 9.1 of the Draft EIS. The socio-economic impacts of the preferred measures were analyzed in Chapters 6, 7, and 8 of the Draft EIS for Amendment 2.

Comment 4: NMFS received several comments concerning the potential for severe economic impacts associated with all of the alternatives considered (other than status quo). Comments indicated a concern that many fishermen may not be able to survive economically until the next stock assessment. One dealer for example saw a 75–percent decrease in revenue in 2007 because of restrictions. The lack of a shark season in 2008 could bring about a financial collapse of the industry. The industry is completely based on sandbar sharks.

Response: NMFS has estimated that the alternatives considered, including the no action alternative, would result in economic consequences to the shark fishery. The severity of the economic consequences varies by alternative suite, with alternative suite 5, the complete closure of the Atlantic shark fishery, having the greatest economic impact. The economic impacts of the various alternative suites are summarized in Table 7.5 of the EIS for Amendment 2.

NMFS acknowledges that dealer impacts could also be substantial and could vary significantly by dealer, depending upon how important sharks are to their operations.

NMFS recognizes the importance of sandbar shark landings to the shark fishing sector. However, sandbar shark landings only comprised 30–percent of the estimated total value of the shark fishery in 2005 ($602,764 in sandbar shark meat and $1,181,803 in fins, versus a total shark fishery revenue of $6,027,516).

Under the Magnuson-Stevens Act, NMFS is required to develop management measures to rebuild overfished shark stocks and prevent overfishing. The final action attempts to balance the economic needs of fishermen and fishing communities with this requirement.

Comment 5: NMFS should include an analysis of the negative economic impacts associated with prohibiting porbeagle sharks in shark tournaments, especially in New England. These tournaments have negligible impacts on porbeagle stocks. An example was provided regarding a tournament that has caught only 4 porbeagle sharks in the past 10 years.

Response: NMFS appreciates this additional information regarding the importance of porbeagle sharks in tournament fisheries. Additional information has been incorporated into the final EIS for Amendment 2 to further address the potential economic impacts of a prohibition of porbeagle landings. Based on public comments received, NMFS selected an alternative suite that permits the recreational retention of porbeagle sharks.

NMFS is reviewing existing data sources for recreational landings of porbeagle sharks. Efforts to expand recreational data collection may be necessary to improve information on porbeagle shark landings in recreational fisheries.

Comment 6: NMFS should specify what the $1.8 million fishery-wide economic impacts include: recreational impacts, commercial impacts, or both. Recreational impacts would be significant if sandbar, bull, and blacktip are not authorized to be landed in the recreational fishery. NMFS has grossly underestimated the impact to recreational fishermen in this proposal.

Response: The $1.8 million discussed for the final action is the estimated reduction in gross revenues from sandbar and non-sandbar LCS resulting from the proposed quota reductions to the commercial shark fishery. Impacts to the recreational shark fishing sector were also analyzed. For the final action, these impacts included: the negative economic impacts resulting from the reduced number of sharks that could be legally landed by recreational anglers, particularly pronounced in areas where blacktip sharks are frequently encountered. In addition, tournaments offering prize categories for sharks could also experience negative economic impacts as a result of not allowing six additional species to be retained in recreational fisheries. Due to a lack of information regarding the relative preferences of shark fishermen to retain shark species over practicing catch-and-release shark fishing, NMFS was unable to quantitatively estimate the economic impacts of the proposed recreational measures restricting the authorized list of species that could be retained.

The final action allows recreational anglers to harvest blacktip, finetooth, bull, spinner, and porbeagle sharks.

Comment 7: Proposed measures will result in a year-round fresh shark meat product. Inconsistent seasons are not good for prices and shark meat is currently $0.30/lb. because the market is flooded so quickly and then seasons are over so soon.

Response: NMFS recognizes that moving to one season for the shark fishery could alleviate some of the uncertainty in the market associated with varying shark seasons. Depending on the intensity of fishing effort at the beginning of the season, it is likely that the final action could result in a year-round fresh shark meat market. This could help improve the prices received for shark meat and help offset some of the negative economic impacts associated with this rule.

Comment 8: Dealers will not likely be interested in continuing to buy shark products when the proposed measures go into place.

Response: NMFS acknowledges that some dealers may opt to no longer participate in the shark fishery. However, the information available to NMFS indicates that several shark dealers already handle small quantities of shark products and, therefore, changes in the shark fishery are unlikely to cause them to change their business practices. Reduced domestic harvest of sandbar sharks could potentially increase the value of harvest in the future due to reduced supplies. Furthermore, having the season open for a longer period of time each year, subject to reduced retention limits, may enhance the domestic shark meat market and increase prices.

Comment 9: Closing fisheries increases the quantity of fisheries products imported into the United States and other countries do not have the conservation measures that are present in the United States.

Response: The United States imports modest quantities of shark fishery products. According to U.S. Census Bureau data, the United States imported 459 mt of shark in 2006 with an estimated value of $3.41 million. In contrast, the United States exported 1597 mt of shark in 2006 estimated to be worth $6.17 million. The United States may be an important transshipment port for shark fins, which may be imported wet, and then processed and exported dried. The United States is, in fact, a net exporter of shark species. NMFS acknowledges that other countries may not have the same shark conservation measures as the United States.

Comment 10: Commenters suggested that NMFS should implement a retraining program for fishermen and families that are displaced by this action. Others suggested fishermen reconfigure their businesses towards providing tourism services.

Response: NMFS has worked with a number of other agencies/departments to explore programs that are available to fishermen and other businesses affected by fishery management measures. Some of these include retaining programs.

The Economic Development Administration (EDA) was created to create new jobs and retain existing jobs in economically stressed communities. Through a series of grant programs, the EDA helps distressed communities develop strategies to improve their own economic situation through a multifaceted cooperative effort. Most of the EDA activity affecting the fishing industry has been funded through the EDA's Public Works Program and the EDA's Economic Adjustment Program. The Public Works Program has funded port and harbor improvements. The Economic Adjustment Program helps communities adjust to serious changes in their economic situation, and proceeds from this program are generally used for organization, business development, revolving loan funds, infrastructure, and market research. Interested parties can learn more about these programs, including

eligibility requirements and contact information, by visiting the EDA website: *http://www.eda.gov/*.

The U.S. Department of Labor's Economic Dislocation and Worker Adjustment Assistance Act provides funds to States and local substate grantees so they can help dislocated workers find and qualify for new jobs. It is part of a comprehensive approach to aiding workers who have lost their jobs that also includes provisions of the Worker Adjustment and Retraining Notification Act and the Trade Adjustment Assistance program. Workers who have lost their jobs and are unlikely to return to their previous industries or occupations are eligible for the program. This includes workers who lose their jobs because of plant closures or mass layoffs; long-term unemployed persons with limited job opportunities in their fields; and farmers, ranchers and other self-employed persons who become unemployed due to general economic conditions. Services include retraining services, readjustment services, and needs-related payments. Interested parties can obtain more information about services available and contact information by visiting the following website: *http://www.doleta.gov/tradeact/*.

Comment 11: Commenters suggested that NMFS consider giving shark fishermen swordfish handgear permits in order to help offset negative economic impacts, while also increasing swordfish landings.

Response: NMFS did not propose changes to the swordfish handgear permit system, however, NMFS will take this suggestion under consideration for future actions. NMFS notes that the swordfish handgear permit is a limited access permit. Therefore, issuing new swordfish handgear permits may result in negative economic impacts to current holders of swordfish handgear permits. In addition, NMFS has been recently issued new regulations to revitalize the swordfish fishery and may consider additional measures in the future depending on the outcome of the current regulatory changes.

Comment 12: NMFS should consider the compound effect of this Amendment and the economic hardships that have been incurred by the Gulf of Mexico red snapper fishing industry.

Response: NMFS considered the cumulative impact of this Amendment with that of other regulatory changes in other fisheries, including the Gulf of Mexico red snapper fishing industry. This analysis is provided in Chapter 4 of the Draft EIS.

Comment 13: If NMFS does not maintain the status quo, NMFS should declare an emergency disaster.

Response: Section 312(a) of the Magnuson-Stevens Act addresses fisheries disaster relief. This section states:

> At the discretion of the Secretary or at the request of the Governor of an affected State or a fishing community, the Secretary shall determine whether there is a commercial fishery failure due to a fishery resource disaster as a result of natural causes, man-made causes beyond the control of fishery managers to mitigate through conservation and management measures, including regulatory restrictions (including those imposed as a result of judicial action) imposed to protect human health or the marine environment, or undetermined causes.

All analyses for determinations (which can be at the request of a Governor or at the Secretary's own discretion) under section 312(a) must undergo a three-prong test: first, the Secretary must determine if there has been a commercial fishery failure; he must also determine that any such failure is the result of a fishery resource disaster; finally, the cause of that disaster must meet the articulated causes outlined in the statute.

Comment 14: NMFS should look into the impact of this Amendment on the consumer. How much will consumer costs increase as a result of your action?

Response: NMFS did not focus its analysis of the impacts of this Amendment on the consumer since shark is primarily exported. The domestic consumption of shark meat and shark fins is limited. It is unlikely that reduction in the production of shark fin will impact consumer prices in the United States. The consumption of fresh shark meat is somewhat limited and is not as widespread as that of other fish species in the U.S. market. There may be some impacts to domestic consumers of shark, especially sandbar sharks, as a result of the preferred management measures. However, it is unlikely that this Amendment will result in significant increases in consumer costs, especially given the estimates that shark meat could be landed in low limits year round, unlike current conditions where shark meat is available for only several weeks each year. Information available on consumer prices for shark and domestic demand of shark products is limited, making it infeasible to conduct a more quantitative analysis of the impacts on consumers.

Comment 15: NMFS received a comment questioning whether shark permits will still be worth anything after the proposed management changes take place.

Response: It is uncertain what shark directed and incidental permits may be worth after the management changes associated with this Amendment are implemented. It is likely that shark permits may be worth less as a result of quota reductions and reduced retention limits. However, there will still be some demand for shark permits from new entrants into the commercial swordfish and tuna fisheries that require participants to hold all three HMS permits.

Note that under 50 CFR 635.4(a)(3), ''Limited access vessel permits or any other permit issued pursuant to this part do not represent either an absolute right to the resource or any interest that is subject to the takings provision of the Fifth Amendment of the U.S. Constitution. Rather, limited access vessel permits represent only a harvesting privilege that may be revoked, suspended, or amended subject to the requirements of the Magnuson-Stevens Act or other applicable law.''

Comment 16: NMFS received comments indicating that requiring fishermen to land sharks with fins on will change the entire pricing structure. NMFS could be changing the whole valuation process here by requiring that sharks have their fins on.

Response: The requirement to land sharks with their fins attached allows fishermen to leave the fins attached by just a small piece of skin so that the shark could be packed on ice at sea efficiently. Shark fins could then be quickly removed at the dock without having to thaw the shark. Sharks may be eviscerated, bled and the head removed from the carcass at sea. These measures should prevent any excessive amounts of waste at the dock, since dressing the shark (except removing the fins) can be performed while at sea. While this will result in some changes in how fishermen process sharks at sea, because the fins can be removed quickly once the shark has been landed, NMFS expects that the market will continue to receive sharks in their log form. While there may be some changes in the way sharks are marketed and priced, it is unlikely that the total ex-vessel value of sharks will change significantly due to the requirement to land sharks with their fins attached.

Comment 17: NMFS needs to reduce the number of limited access permits.

Response: Reducing the number of limited access permits was not proposed for this Amendment because of the ramifications that such a reduction could have on other fisheries and the overall HMS permit structure. NMFS

chose to limit effort via management measures in this final rule because these measures can be implemented with greater expediency and improve the likelihood that fishing mortality will be reduced consistent with NS1. NMFS may consider reductions in the number of permits in future actions.

16. Miscellaneous

Comment 1: There should not be any netting allowed in the Delaware Bay as this is a nursery ground for sharks.

Response: The waters of the Delaware Bay are in state waters; therefore any management of sharks in Delaware Bay is conducted by the states of New Jersey, Delaware, and Pennsylvania. The Consolidated HMS FMP only regulates fisheries in Federal waters.

Comment 2: In the ''old'' Magnuson-Stevens Act (before reauthorization), there was a section indicating that if NMFS reduces incomes by 13–percent, then fishermen are supposed to receive due compensation.

Response: The current Magnuson-Stevens Act has no such provision.

Comment 3: NMFS should allow vessel owners to keep sharks that are dead at haulback if observers are onboard the vessel.

Response: NMFS did not consider modifying this provision in Amendment 2 to the Consolidated HMS FMP. Generally speaking, the observers are onboard to monitor fishing activities. It is the responsibility of the vessel operator and crew, not the responsibility of observer, to predict whether or not sharks caught during fishing activities would survive if released. All sharks that are not, or cannot be, possessed must be released in a manner that would maximize their chances of survival. Allowing dead sharks to be harvested only when observers are onboard could potentially put them in more of an enforcement role which is not the intent of the fisheries observer program. Furthermore, this might encourage fishermen to fish in a different manner when observers are onboard. Modifying the soak time or types of hooks and bait deployed to ensure that more sharks are dead at haulback would not provide the observer program with data that is representative of fishing behavior when observers are not present. Increasing the number of sharks that are harvested in this manner may have negative ecological impacts on shark populations.

Comment 4: NMFS should consider making video copies of the shark identification workshops, so that those who do not have the money to travel may watch the presentation.

Response: NMFS may consider alternative methods for shark dealers to renew their shark identification certificates as long as the original objectives of the identification workshops are met. Alternative methods may include, but are not limited to, renewing identification certificates via the Internet.

Comment 5: NMFS should manage all fish caught on BLL gear collectively, including grouper and tilefish. When fishing for sharks, we cannot keep snapper, yet we have a combined fishery. These should not be managed separately.

Response: The HMS Management Division is responsible for managing Atlantic sharks, tunas, billfish, and swordfish. Currently, Fishery Management Councils recommend management measures for grouper and tilefish to NMFS. The relevant Council or Councils depends upon the specific region(s) involved. NMFS may consider more cooperative management initiatives in the future, as necessary.

Comment 6: Will shark fishing be closed until this Amendment is implemented?

Response: Fishing for large coastal sharks will be closed through the second trimester. A final rule describing the seasons and quota for the first and second trimester of 2008 was published in the **Federal Register** on November 29, 2007 (72 FR 67580).

Comment 7: NMFS needs to realize that fishermen are still going to go fishing for other species year-round. As a result, fishermen are going to end up killing sharks and discarding them dead. Another fishery is going to get more pressure as a result of these measures because shark fishermen are not going to stop fishing.

Response: NMFS understands that participants in the shark fishery also participate in numerous other fisheries. Reductions in fishing mortality that result from this amendment will likely result in fishing effort shifting from the shark fishery to other fisheries in which participants maintain permits. Reduced retention limits and the fact that sandbar sharks will only be landed in the shark research fishery are expected to result in trips targeting other species. NMFS has devised retention limits and seasons such that fishermen targeting other non-shark species will be able to possess a limited number of non-sandbar LCS incidentally, minimizing the need to discard sharks dead.

Comment 8: NMFS should clarify what the gear limitations within the shark research fishery are and whether or not participants would be able to possess sandbar sharks if they have an observer onboard.

Response: Gear limitations within the shark research fishery will depend on annual research objectives. An objective of the shark research fishery is to continue to collect fishery-dependent data that reflects how the fishery operated historically. Therefore, BLL gear will likely be the predominant gear deployed. However, research objectives might also require participants to deploy alternative gear types to discern their feasibility and impacts on target and non-target catch. Vessels issued a shark research permit will only be able to possess sandbar sharks when they have a NMFS-approved observer onboard.

Comment 9: NMFS should not require fishermen to fill out a logbook when they only use dealer data. Instead of logbooks, NMFS should use carbon copies of trip tickets that are submitted to dealers.

Response: NMFS uses logbook data in addition to data collected from dealer reports. Logbooks provide vessel specific landings and effort data that are not reflected in shark dealer data. These data can be used by managers and scientists in a variety of ways to aid in managing and understanding the fishery. Sharks dealer data are used specifically for quota monitoring and stock assessments but are often combined and used with logbook data for other management purposes.

Comment 10: NMFS should consider reducing soak time as a means of reducing the number sandbar shark dead discards.

Response: NMFS has examined the regulation of soak times to reduce fishing mortality and dead discards, however, NMFS found that it would be extremely difficult to monitor and enforce soak times.

Comment 11: NMFS should consider placing observers on all vessels and letting all fishermen continue to fish for sharks. That is how NMFS will get accurate data.

Response: NMFS is requiring that observers are present on all trips within the shark research fishery. A limited number of vessels selected to participate in the research fishery will continue to able to fish for sharks, including sandbar sharks, subject to available quota. NMFS is also attempting to maintain adequate observer coverage outside the research fishery.

Comment 12: These measures will cause a large increase in dead discards, which equals wasted fish and wasted money.

Response: The final action effectively creates an incidental fishery for sharks.

The allowance for incidental landings and seasons that are open longer than they have been historically should minimize a large increase in dead discards. Dead discards could potentially increase if there were a reduced retention limit or if the shark season were closed for extensive periods during which all sharks would be discarded at sea.

Comment 13: NMFS should consider physically enhancing habitat to protect these species.

Response: Habitat enhancement does not address removal of sharks. Existing fishing mortality levels for sandbar and dusky sharks indicate that these species are experiencing overfishing and that the stocks have been overfished. Habitat enhancement was not considered in this action because, in isolation, it does not address overfishing or rebuilding of overfished stocks.

Comment 14: NMFS should require shark fishermen to take the shark dealer identification course.

Response: The public, including shark fishermen, is welcome to attend the shark identification courses provided by NMFS. It is currently voluntary for shark fisherman to participate in shark identification courses. NMFS wants to ensure that shark dealers are aware of how to properly identify sharks because NMFS uses information from shark dealer reports to monitor the quota during the fishing season. Further, shark dealer reports play a critical role in conducting stock assessments. NMFS may consider expanding the groups of participants required to complete these workshops in the future.

Comment 15: The Magnuson-Stevens Act says to rebuild overfished stocks by 2012. NMFS should not use rebuilding schedules that require hundreds of years.

Response: Longer rebuilding periods are allowed under NS1 of Magnuson-Stevens Act when the following conditions specified in the NS1 Guidelines are met, which is the case with the species that are being rebuilt in this amendment. The regulatory text at 50 CFR 600.310(e)(4)(ii)(B)(*3*) states:

> [i]f the lower limit is 10 years or greater, then the specified time period for rebuilding may be adjusted upward to the extent warranted by the needs of fishing communities....except that no such upward adjustment can exceed the rebuilding period calculated in the absence of fishing mortality, plus one mean generation time or equivalent period based on the species' life-history characteristics.

Comment 16: NMFS should not require the public to attend identification workshops for sharks when shark fishing will essentially be banned.

Response: While shark fishing will be substantially reduced under this Amendment, there will still be incidentally caught sharks. Accurate shark identification will be important for gathering information for future management.

Comment 17: Fishermen should be allowed to keep dead dusky sharks on haulback because discarding dead sharks is a waste.

Response: Dusky sharks are a prohibited species that must be released. NMFS has determined that dusky sharks are a prohibited species because their life history is not conducive to commercial or recreational fisheries targeting them. Dusky sharks are late-maturing and have very few offspring. Further, these species do not have high post release survival on longline gear. NMFS continues to discourage fishermen from targeting dusky sharks because the recent stock assessment indicates that dusky sharks are overfished and experiencing overfishing despite being listed as a prohibited species since 2000.

Comment 18: NMFS needs to consider an exit strategy in case things do not work out as planned in the amendment.

Response: NMFS believes that this Amendment allows for sufficient flexibility to make adjustments as conditions may change in the fishery. Furthermore, regulations are constantly being reviewed for their utility and whether or not they are meeting their stated objectives. Additional regulations are expected as new stock assessments become available.

Comment 19: NMFS needs to improve international management with Mexico to manage sharks throughout their range.

Response: NMFS is currently working through the appropriate international foras to improve shark management in Mexico.

Comment 20: NMFS should consider adding a ''use it or lose it'' requirement on shark permits.

Response: Measures requiring shark fishermen to demonstrate landings history or risk losing their commercial shark fishing permit were not considered in this amendment. The addition of a ''use it or lose it'' condition on shark permits may actually result in increased pressure on sharks if holders of latent permits are compelled to use their permits sufficiently to avoid losing them in the future.

Comment 21: There is an inconsistency in the Draft EIS, Chapter 3 page 16. This presents state regulations, and fails to mention that longline gear is also prohibited in Georgia's state waters. Additionally, Georgia's Small Shark Composite should have the acronym SSC, not SCS, which is the federal Small Coastal Sharks management group.

Response: These inconsistencies have been addressed in the Final EIS.

Comment 22: There is new scientific evidence that oceanic whitetip shark stocks have declined.

Response: NMFS has not conducted a stock assessment for oceanic whitetips. NMFS will continue to work with international partners and ICCAT towards more species-specific assessments for pelagic sharks. Data may be a limiting factor, however, as there are limited landings data for oceanic whitetip sharks. To date, ICCAT has completed assessments for blue and shortfin mako sharks. There is scant data available on oceanic whitetip landings.

Comment 23: The Draft EIS does little to address bycatch of protected species aside from the suggestion that the preferred alternative may provide a mechanism to conduct the field trials necessary to appropriately assess the efficacy of circle hooks for reducing bycatch and post-hooking mortality of sea turtles in the BLL fishery. While both the pelagic and BLL fisheries are required to carry tools to remove gear from turtles before they are released, there are no performance goals for removing gear or a requirement to use circle hooks for bycatch of protected species.

Response: NMFS may consider additional management measures for reducing bycatch in the future. NMFS has prepared a new BiOp regarding the proposed actions under Amendment 2 to the Consolidated HMS FMP, which was released on May 20, 2008. The May 2008 BiOp concluded based on the best available scientific information, the proposed action is not likely to jeopardize the continued existence of endangered green, leatherback, and Kemp's ridley sea turtles; the endangered smalltooth sawfish; or threatened loggerhead sea turtle. The proposed actions are not expected to increase endangered species or marine mammal interaction rates. Furthermore, the BiOp concluded that the proposed actions are not likely to adversely affect any of the listed species of marine mammals, invertebrates (i.e., listed species of coral) or other listed species of fish (i.e., Gulf sturgeon and Atlantic salmon) in the action area. HMS is implementing Amendment 2 to the Consolidated HMS FMP consistent with the May 2008 BiOp.

Comment 24: If Atlantic and Gulf of Mexico fisheries are to continue, 100–

percent observer coverage should be required.

Response: In 2007 and 2008, NMFS is implementing 100–percent observer coverage for vessels operating in the Gulf of Mexico with PLL gear. Outside of this period, a statistically significant level of observer coverage will be used that is consistent with relevant Biological Opinions and other factors.

Comment 25: Deepwater sharks need protection. This group of sharks is simply too vulnerable to sustain fisheries so NMFS should prevent the development of fisheries before any fishermen invest in them. The deep water shark complex needs attention and it was a major mistake to remove deep water sharks from the management unit as was done in Amendment 1 to the 1999 FMP and it should not be repeated in this Amendment through benign neglect.

Response: Deepwater sharks were previously removed from the management unit in Amendment 1 to the 1999 FMP. There are no fisheries targeting deepwater sharks and no data from fisheries that catch deepwater sharks as bycatch. The referenced changes clarify the regulations by linking the definition of ''shark'' more directly to the definition of the shark ''management unit.'' The only regulation prior to this time (2003) was the ban on shark finning, however, this was addressed in the SFPA of 2000. NMFS will continue to collect information on deepwater sharks and may add them to the management unit or implement additional management measures to protect them in the future.

Comment 26: NMFS claims that dusky bycatch will decrease, however, the species will nonetheless be subject to an increased non-sandbar LCS retention limit. This means that the actual catch of dusky sharks is not likely to significantly decrease. Catch of dusky sharks must be significantly reduced in order for the species' population to rebuild.

Response: Unlike the sandbar shark assessment, which recommended a specific TAC, or the blacktip stock assessments, which recommended specific catch levels, the dusky shark assessment did not give specific mortality targets. In addition, even if NMFS stopped all shark fishing in the Atlantic, dusky sharks would still be caught as bycatch in BLL and gillnet fisheries targeting other non-shark species. Even though NMFS placed this species on the prohibited species list in 2000, discards continue. NMFS estimated a reduction in dusky mortality as a result of sandbar and non-sandbar LCS management actions. Based on the reduced quotas and trip limits, NMFS estimates that dusky shark mortality could be reduced from 33.1 mt dw to 9.1 mt dw per year. This is a 73-percent reduction in mortality compared to the status quo, and should afford dusky sharks more protection compared to the status quo.

Comment 27: The proposed rule does not offer protection for Small Coastal Sharks (SCS).

Response: NMFS is planning to address SCS in a future FMP amendment based on the 2007 SCS stock assessment (May 7, 2008, 73 FR 25665).

Comment 28: NMFS should consider impacts of gear (longline, gillnet) on EFH and coral reefs.

Response: NMFS is currently developing a draft Amendment 1 to the Consolidated Atlantic HMS FMP to address EFH issues, including gear impacts on HMS and non-HMS habitat.

Comment 29: Is a ''suite'' a new concept or term for alternatives? The suite format is very effective.

Response: The term ''suite'' is used here to group regulatory alternatives created to address the objective of a rulemaking. The suite concept is used to help facilitate the communication of logical groupings of potential management measures that could be used in conjunction to address the objectives of this rulemaking. The suite approach also allows for a more holistic analysis of the overall benefits and costs associated with the major regulatory alternatives considered. For example, the specific quotas implemented in this rule also corresponds to modified retention limits, reporting requirements, and regions.

Comment 30: All commercial fish profiteers should be banned from catching any sharks at any time.

Response: NMFS manages commercial fisheries for authorized species in the Exclusive Economic Zone of the United States. Under the Magnuson-Stevens Act, NMFS must manage fisheries to achieve optimum yield and must also consider economic and social impacts on individual businesses and communities. Alternative suite 5 included measures that would have closed all shark fisheries. This alternative suite is not preferred because of the significant economic impacts it would have caused, the fact that all sharks would have to be discarded, often dead, and because that alternative would preclude NMFS from gathering biological and fishery dependent data information needed to accurately assess the status of the stocks.

Changes from the Proposed Rule (72 FR 41392, July 27, 2007)

In addition to the correction of minor edits throughout, NMFS has made several changes to the proposed rule. These changes are outlined below.

1. In § 635.2, the definition of ''naturally attached'' was added. The definitions of ''dress'' and ''dressed weight'' were modified to clarify the regulation requiring commercial vessel operators to keep the fins on the shark carcass through offloading.

2. In § 635.2, the definition of ''first receiver'' was revised based on public comment and discussions with NOAA's Office of Law Enforcement. The revised definition matches more fully with other definitions of first receivers in other fishery regulations (see 50 CFR parts 622 and 648) and clarifies who needs to have a shark dealer permit.

3. In § 635.2, the definition of ''shark research permit'' was modified to specify that the permit is specific to the vessel and owner combination, not just the vessel. This change will ensure that owners who are chosen to participate in the shark research fishery and who are trying to sell their vessel, do not try to sell their shark research permit with their vessel, since the particular applicant was chosen by NMFS to conduct the research based on certain factors.

4. In § 635.5(b)(1)(i), a clarification is made that shark dealers must report fin weight and meat weight separately, as specified on the forms. Additionally, after publication of this final rule, NMFS intends to seek approval, pursuant to the Paperwork Reduction Act (PRA), to require dealers to check a box on the dealer form to indicate whether sharks were landed with the fins attached or not. This requirement would be made effective when OMB approves the information collection under Control Number 0648–0040. Notification of approval will be published in the **Federal Register**.

5. In § 635.21(d)(1)(iii), the definitions of the MPAs are modified to match the final areas recommended by the South Atlantic Fishery Management Council in the summer of 2007.

6. In § 635.22(c), the list of species that can be landed under the recreational retention limit was modified to include non-ridgeback species of LCS, tiger sharks, small coastal sharks, and pelagic sharks based on public comment. In the proposed rule, the harvest of certain species that NMFS felt were difficult to identify correctly, such as bull, spinner, and blacktip sharks, was proposed to be prohibited by recreational fishermen.

NMFS feels that the species that are finalized in this action are easily identified and more closely match the intent of the proposed regulation. Additionally, the entire paragraph was reorganized for clarity.

7. Section 635.24(a) was modified to update the commercial retention limits based on public comment, additional analyses, and changes to the proposed quotas. Specifically, an adjusted retention limit for non-sandbar LCS from the effective date of this rule through 2012 was added to account for overharvests in 2007. Additionally, a paragraph has been added to prohibit the highgrading of sharks by commercial fishermen based on public comment and a request from enforcement.

8. In § 635.27(b), the commercial quotas were modified based on public comment and additional analyses. Specifically, a porbeagle shark quota was added, unclassified sharks will be counted towards the appropriate species quota based on ratios in observer data and/or on shark dealer reporting forms, the non-sandbar LCS quota was split into two regions (modified from the current definition to clarify that the Florida Keys are located in the Gulf of Mexico region), and an adjusted base quota from the effective date of this rule through 2012 (five years) was added to account for overharvests in 2007. Future overharvests will generally be taken off the following year, as proposed. However, depending on the amount of future overharvests, NMFS may deduct the overharvests over several years up to a maximum of five years. Spreading the overharvests out should, among other things, ensure that the shark research fishery can continue to collect much-needed data each year.

Additionally, NMFS clarified the section on adjusting quotas based on underharvests to clarify that if a species in a particular quota group (e.g., non-sandbar LCS) were overfished, overfishing were occurring, or had an unknown status, then NMFS would not adjust the quota based on underharvests.

9. In § 635.28(b), the section was modified, based on public comment, to allow for all species groups and regions to be closed separately, instead of together as proposed, when the fishery is expected to reach 80 percent of the relevant quota.

10. In § 635.30(c)(2) and (3), sentences were added, corresponding to the added definitions of ''naturally attached'' and ''dress,'' to clarify the regulation to keep all fins attached to the corresponding shark carcass, including the upper lobe of the tail, through offloading and to state specifically that no shark fins are allowed on a vessel unless the fins are naturally attached to a shark carcass.

11. In § 635.31, paragraph (c)(1) was added to clarify that persons may only sell sharks if both the fishery and/or region is open.

12. In § 635.32(f), additional specifics regarding the required items on the application and the process for issuing shark research permits were added based on public comment, requests by NOAA's Office of Law Enforcement, and requests by NMFS scientists. These specifics include the requirement for vessels to have complied with observer coverage regulations and HMS fishery regulations to be eligible for a shark research permit under this part. Additional clarifications on how NMFS will select vessels have been added.

13. In § 635.71, various prohibitions have been updated or modified based on the changes listed above.

Commercial Fishing Season Notification

The 2008 adjusted commercial quotas for each shark species group is as follows: sandbar shark (shark research fishery only) = 87.9 mt dw; non-sandbar LCS = 615.8 mt dw; pelagic sharks other than blue or porbeagle = 488 mt dw; blue shark = 273 mt dw; porbeagle shark = 1.7 mt dw; and SCS = 454 mt dw. The non-sandbar LCS commercial quota is further split by region and fishery as follows: Atlantic region = 187.8 mt dw; Gulf of Mexico region = 390.5 mt dw; and shark research fishery = 37.5 mt dw.

On July 24, 2008, the sandbar, non-sandbar LCS, pelagic shark, blue shark, porbeagle shark, and SCS fisheries will open under the quotas noted above. All of these fisheries will remain open through December 31, 2008, unless the quota for that shark species group (or in the case of non-sandbar LCS, regional area) is projected to reach 80 percent of its available quota. When calculating the percent of the available quota caught for each species and/or region, NMFS will include landings from January 1, 2008, through July 24, 2008. As specified in § 635.27(b)(1), once the landings for that shark species group or regional area reach 80 percent of its quota, NMFS will file for publication with the Office of the Federal Register an appropriate rulemaking for that shark species group that will be effective no fewer than 5 days from date of filing. From the effective date and time of the closure, until NMFS announces via a notice in the **Federal Register** that additional quota is available, the fishery for that shark species group and/or regional area is closed, even across fishing years.

When the fishery for a shark species group and/or regional area is closed, a fishing vessel issued an Atlantic Shark LAP pursuant to § 635.4 may not possess or sell a shark of that species group, except under the conditions specified in § 635.22(a) and (c) or if the vessel possesses a valid shark research permit under § 635.32 and a NMFS-approved observer is onboard. A shark dealer issued a permit pursuant to § 635.4 may not purchase or receive a shark of that species group from a vessel issued an Atlantic Shark LAP, except that a permitted shark dealer or processor may possess sharks that were harvested, off-loaded, and sold, traded, or bartered, prior to the effective date of the closure and were held in storage. In the case of non-sandbar LCS, during a regional fishing closure, a fishing vessel issued an Atlantic Shark LAP pursuant to § 635.4 and operating in region(s) closed to shark fishing may not possess or sell a shark of that species group, except under the conditions specified in § 635.22(a) and (c). A shark dealer issued a permit pursuant to § 635.4 and located in the closed region may not purchase or receive a shark of that species group from a vessel issued an Atlantic Shark LAP, except that a permitted shark dealer or processor may possess sharks that were harvested, off-loaded, and sold, traded, or bartered, prior to the effective date of the closure and were held in storage. Under a closure for a shark species group and/or regional closure, a shark dealer issued a permit pursuant to § 635.4 may, in accordance with state regulations, purchase or receive a shark of that species group if the sharks were harvested, off-loaded, and sold, traded, or bartered from a vessel that fishes only in state waters and that has not been issued a Shark LAP, HMS Angling permit, or HMS CHB permit pursuant to § 635.4. Additionally, under a closure for a shark species group and/or regional closure, a shark dealer issued a permit pursuant to § 635.4 may purchase or receive a shark of that species group if the sharks were harvested, off-loaded, and sold, traded, or bartered from a vessel issued a valid shark research permit (per § 635.32) that had a NMFS-approved observer on board during the trip during which sharks were collected.

Classification

The Assistant Administrator for Fisheries determined that Amendment 2 to the Consolidated HMS FMP is necessary for the conservation and management of the Atlantic shark fishery and is consistent with the Magnuson-Stevens Act and other applicable laws.

NMFS prepared a FEIS for this FMP amendment. The FEIS was filed with the Environmental Protection Agency on April 11, 2008. A notice of availability was published on April 18, 2008 (73 FR 21124). In approving the FMP amendment, NMFS issued a Record of Decision (ROD) on June 6, 2008, identifying the selected alternatives. A copy of the ROD is available from NMFS (see **ADDRESSES**).

This final rule has been determined to be not significant for purposes of Executive Order 12866.

This final rule contains a collection-of-information requirement subject to the PRA and which has been approved by OMB under Control Number 0648–0471. Public reporting burden for the HMS EFP, SRP, display permit, shark research permit, and letter of authorization information collection is estimated to average 2 hours per scientific research plan; 40 minutes per application, including the shark research permit application; 15 minutes per request for amendment to the EFP; 1 hour per interim report; 2 minutes per ''no catch'' report; 40 minutes per annual report; 5 minutes per departure notification regarding collection of display animals; 10 minutes per notification call for observer coverage for the shark research fishery; and 2 minutes per tag application. These burden estimates include the time for reviewing instructions, searching existing data sources, gathering and maintaining the data needed, and completing and reviewing the collection information.

This rule also contains revisions to collection of information 0648-0040. The revisions are subject to review and approval by OMB under PRA. Currently, this collection of information is under review at OMB for revisions other than those contained in this rule (73 FR 18473, April 4, 2008). Once OMB approves the revisions in that rule, NMFS will submit a PRA package to OMB for approval regarding the addition of a check box on the dealer form. This check box would allow the dealer to note whether the shark fins were attached to the shark at landing or not. NMFS does not expect that the addition of a check box regarding shark fins would add to the reporting burden. NMFS will publish a document in the **Federal Register** to announce the effective date of the information collection.

Send comments regarding these burden estimates or any other aspect of this data collection, including suggestions for reducing the burden, to NMFS (see **ADDRESSES**) and by e-mail to *David_Rostker@omb.eop.gov*, or fax to 202–395–7285.

Notwithstanding any other provision of the law, no person is required to respond to, and no person shall be subject to penalty for failure to comply with, a collection of information subject to the requirements of the PRA, unless that collection of information displays a currently valid OMB control number.

With the release of the proposed rule on July 27, 2007, NMFS determined that the management measures in this rule will be implemented in a manner that is consistent, to the maximum extent practicable, with the enforceable policies of the approved coastal management programs of states with Coastal Zone Management Act (CZMA) programs that are located in the Atlantic Ocean and Gulf of Mexico. This determination was submitted for review by the responsible state agencies under section 307 of the CZMA. On October 10, 2007, Georgia's Department of Natural Resources (GDNR) objected to NMFS' consistency determination that the provisions in Amendment 2 to the Consolidated HMS FMP are consistent, to the maximum extent practicable, with the enforceable policies of the Georgia Coastal Zone Management Program (GCZMP). The October 10, 2007, letter stated that NMFS failed to consider the elimination of the use of shark gillnets in Amendment 2 to the Consolidated HMS FMP. GDNR claims that the use of gillnets in Federal waters is inconsistent with the GCZMP because the program bans the use of gillnet and longline gear in state waters to address bycatch of protected species and marine mammals.

NMFS considered the comments in the October 10, 2007, letter and, for the reasons stated below, has determined that the final actions in Amendment 2 to the Consolidated HMS FMP, including allowing the use of gillnet gear in the Atlantic shark fishery, are consistent to the maximum extent practicable with the enforceable policies of the GCZMP, 15 CFR 930.32.

NMFS shares the State of Georgia's concern regarding the impact of the shark gillnet fishery on threatened and endangered species. Given these impacts, NMFS will not implement measures that increase fishing effort with this gear type, such as setting gillnet specific retention limits for blacktip sharks. However, NMFS also recognizes that the data currently available indicate relatively low rates of bycatch and bycatch mortality of protected species and other finfish in the shark gillnet fishery compared to other HMS and non-HMS fisheries. It is worth noting that observer coverage rates in the shark gillnet fishery are higher than in other fisheries because of Atlantic Large Whale Take Reduction Plan requirements. Increased observer coverage reduces the associated error that can be introduced when calculating bycatch and protected resource interactions on non-observed trips. For instance, observer reports indicate that finfish bycatch in shark gillnet fishery during 2007 ranged from 1.7 to 13.3 percent of the total catch. In addition, observed protected species bycatch (sea turtles and marine mammals) was less than 0.1 percent of the total catch. Therefore, NMFS does not believe it is appropriate to eliminate this fishery and shift its associated effort to other fisheries that have higher interaction rates with protected resources and marine mammals.

In addition, according to recent observer reports, only four to six vessels use shark gillnet gear, therefore, the cumulative impact of this fishery is not expected to have significant ecological impacts on non-target species. The incidental capture of endangered species in the shark gillnet fishery is regulated under the Endangered Species Act (ESA). A BiOp issued May 20, 2008, in response to the actions taken in the Final Amendment 2 to the Consolidated Atlantic Highly Migratory Species Fishery Management Plan, concluded, that the continuation of the shark gillnet (including strikenets, drift gillnets, and sink gillnets) fishery would not likely jeopardize the continued existence of protected species or result in the destruction or adverse modification of critical habitat. Furthermore, the BiOp indicated that shark strikenets are not likely to have much impact on sea turtle or smalltooth sawfish takes because deployment of this gear currently results in very few takes. Interactions with protected resources occur more frequently with drift or sink gillnets than using strikenets, but gillnet gear interactions with protected resources are still minimal compared to longline fishing.

In addition, currently, all shark gillnet vessels are required to carry VMS and are subject to observer coverage during and outside of the right whale calving season. The most recent regulations amending the Atlantic Large Whale Take Reduction Plan were published in the **Federal Register** on June 25, 2007 (72 FR 34632), and on October 5, 2007 (72 FR 57104). These regulations include a variety of measures aimed at reducing the likelihood of an interaction between shark gillnet gear and right whales. These regulations include, but are not limited to, prohibiting all gillnet fishing from November 15 through April 15 of each year in Federal waters off the

state of Georgia. NMFS will continue to work with the take reduction teams and relevant Fishery Management Councils to examine methods to reduce bycatch.

NMFS acknowledges the concerns raised by the State of Georgia regarding protected resources interactions and bycatch that occurs in gillnet gear. Under the Magnuson-Stevens Act National Standards (16 U.S.C. 1851(a)(1), (3), (8), and (9)), NMFS must, among other things, implement conservation and management measures to prevent overfishing while achieving, on a continuing basis, the optimum yield from each fishery; manage stocks throughout their range to the extent practicable; minimize adverse economic impacts on fishing communities to the extent practicable; and minimize bycatch and bycatch mortality to the extent practicable. Gillnets are the commercial gear that are used to primarily target small coastal sharks (SCS) and blacktip sharks. The SCS complex was assessed in 2007; three of the four species of SCS have been determined to not be overfished with overfishing not occurring. Blacknose sharks have been determined to be overfished with overfishing occurring; therefore, NMFS has initiated development of a rebuilding plan for this species and measures to end overfishing. These measures may include changes to the shark gillnet fishery, as necessary. However, the latest blacktip stock assessment recommended not changing catches of blacktip sharks in the Atlantic Ocean. Therefore, based on the best scientific information available, Amendment 2 to the Consolidated HMS FMP would manage the fishery for optimum yield by keeping the SCS quota at the status quo level and setting a non-sandbar large coastal shark (LCS) quota (including blacktip sharks) based on historical landings. Given that the non-sandbar LCS quota is based on the latest blacktip shark assessment, closing the shark gillnet fishery in Federal waters off Georgia would not facilitate achieving the optimum yield from the fishery and managing the stocks throughout their range. Thus, NMFS is not prohibiting shark gillnet gear at this time due to the negative social and economic impact this would have on the four to six vessels actively fishing in the shark gillnet fishery. In addition, NMFS has implemented high-levels of observer coverage on gillnet vessels targeting sharks as well as those targeting other species to monitor bycatch and interactions with protected resources; NMFS can take additional action if interactions with protected resources in the this fishery become a problem.

At this time, there is not sufficient information to support a closure of the shark gillnet fishery in Federal waters adjacent to Georgia, pursuant to the Coastal Zone Management Act. This decision is consistent with National Standard 2 of the Magnuson-Stevens Fishery Conservation and Management Act (16 U.S.C. 1801 *et seq.*) (Magnuson-Stevens Act), which requires that management measures be based on the best scientific information available including the BiOp. NMFS has determined that the final actions in Amendment 2 to the Consolidated HMS FMP and its implementing rule are consistent to the maximum extent practicable with the enforceable policies of the GCZMP. Accordingly, this rule, which that finalizes Amendment 2 to the Consolidated HMS FMP, will not ban gillnet gear in the Atlantic shark fishery.

Summary of the Final Regulatory Flexibility Analysis

A final regulatory flexibility analysis (FRFA) was prepared. The FRFA incorporates the IRFA, a summary of the significant issues raised by the public comments in response to the IRFA, NMFS' responses to those comments, and a summary of the economic analyses completed to support the action. A summary of the analysis, which addresses each of the requirements in 5 U.S.C. 604(a)(1)-(5), can be found below. A copy of the full analysis is available in Amendment 2 to the Consolidated HMS FMP (see **ADDRESSES**).

Statement of the Need for and Objectives of this Final Rule

The need for and objectives of the final rule are fully described in the preamble of the proposed rule (72 FR 41392, July 27, 2007) and in Final Amendment 2 to the Consolidated HMS FMP and are not repeated here (5 U.S.C. 604(a)(1)). In summary, the selected actions in this final rule will rebuild overfished shark fisheries by: reducing the commercial quotas, adjusting the commercial retention limits, establishing a shark research fishery, requiring commercial vessels to maintain all fins on the shark carcasses through offloading, establishing two regional quotas for non-sandbar large coastal sharks (LCS), establishing one annual season for commercial shark fishing, changing the reporting requirements for dealers (including swordfish and tuna dealers), establishing additional time/area closures for BLL fishermen, and changing the authorized species for recreational fishermen. This rule also establishes the 2008 commercial quota for all shark species groups. These changes affect all commercial and recreational shark fishermen and shark dealers.

A Summary of the Significant Issues Raised By the Public Comments in Response to the IRFA, a Summary of the Assessment of NMFS of Such Issues, and a Statement of Any Changes Made in the Rule as a Result of Such Comments

A FRFA is also required to include a summary of the significant issues raised by the public comments in response to the IRFA, a summary of the assessment of the issues raised, and a statement of any changes made in the rule as a result of the comments (5 U.S.C. 604(a)(2)). NMFS received many comments on the proposed rule and draft EIS during the public comment period. A summary of these comments and NMFS's responses are included above. The specific economic concerns raised in comments are also summarized here.

NMFS received a comment that NMFS should consider an alternative suite that incorporates a ''phase out'' of the commercial shark industry. NMFS did consider such an alternative in the Draft EIS that would have ended Atlantic commercial shark fishing, Alternative Suite 5. Under this alternative, shark landings would have been limited to research and the collection for public display via the HMS Exempted Fishing Program. Recreational fisheries would have been catch and release only. However, after careful consideration of the other alternatives, this alternative suite was not preferred due to the economic costs associated with a complete closure as discussed in Chapter 6 of Amendment 2 to the Consolidated HMS FMP.

NMFS received several comments regarding an industry buyout/buyback. NMFS recognizes that some participants of the Atlantic shark fishery expressed interest in reducing fishing capacity for sharks via some form of buyout program. Buyouts can occur via one of three mechanisms, including: through an industry fee, via appropriations from the United States Congress, and/or with funds provided from any State or other public sources or private or non-profit organization. A buyout plan is not proposed in this rulemaking, despite requests for consideration from the HMS Advisory Panel and other affected constituents, because NMFS is unable to independently implement a buyout as a management option. Buyouts must be initiated via one of the aforementioned

mechanisms. The shark fishery did develop an industry ''business plan'' that examined options for a buyout, which is further described in Chapter 1 of the Draft Amendment 2 to the Consolidated HMS FMP.

NMFS received several comments concerning the potential for severe economic impacts associated with all of the alternatives considered (other than status quo). Comments indicated a concern that many fishermen may not be able to survive economically until the next stock assessment. NMFS estimated that the alternatives considered, including the no action alternative, would result in economic consequences to the shark fishery. The severity of the economic consequences varies by alternative suite, with alternative suite 5, the complete closure of the Atlantic shark fishery, having the greatest economic impact.

It was also suggested that NMFS should include analysis of the negative economic impacts associated with prohibiting porbeagle sharks in shark tournaments, especially in New England. NMFS appreciates this additional information regarding the importance of porbeagle sharks in tournament fisheries. Additional information has been incorporated into the final EIS for Amendment 2 to the Consolidated HMS FMP to further address the potential economic impacts of a prohibition of porbeagle landings. However, based on strong support from the public not to prohibit retention of porbeagle sharks and NMFS' recognition of the negative impacts of such a prohibition, NMFS is choosing not to prohibit the recreational retention of porbeagle sharks.

Comments indicated that economic impacts on recreational fisheries would be significant if sandbar, bull, and blacktip sharks were prohibited in the recreational fishery. Comments indicated that the negative economic impacts resulting from the reduced number of sharks that could be legally landed by recreational anglers would be particularly pronounced in areas where blacktip sharks are frequently encountered. In addition, tournaments offering prize categories for sharks could also experience negative economic impacts as a result of not allowing six additional species to be retained in recreational fisheries. Due to a lack of information regarding the relative preferences of shark fishermen to retain shark species over practicing catch-and-release shark fishing, NMFS was unable to quantitatively estimate the economic impacts of the proposed recreational measures restricting the authorized list of species that could be retained. In part to mitigate these impacts, the final preferred alternative suite would allow recreational anglers to retain blacktip, finetooth, blacknose, bull, spinner, and porbeagle sharks.

Comments also indicated a concern that dealers will not likely be interested in continuing to buy shark products when the proposed measures go into place. NMFS acknowledges that some dealers may opt to no longer participate in the shark fishery due to the decrease in volume of shark product that is anticipated under the reduced quotas. Handling low volumes of shark product may not be profitable for some dealers. However, the information available to NMFS indicates that several shark dealers already handle small quantities of shark products, and therefore, changes in the shark fishery are unlikely to cause them to change their business practices. Reduced domestic harvest of sandbar sharks could potentially increase the value of shark product in the future due to reduced supplies. Furthermore, having the season open for a longer period of time each year, subject to reduced retention limits, may enhance the domestic shark meat market and increase prices.

Several comments suggested NMFS should implement a retraining program for fishermen and families that are displaced by this action. Others suggested that fishermen reconfigure their businesses towards providing tourism services. NMFS has worked with a number of other agencies/departments to explore programs that are available to fishermen and other businesses affected by fishery management measures. Some of these include retraining programs and financial assistance and would mitigate some of the economic impacts of this rule. These programs are further discussed in response to comments provided above.

Commenters also suggested that NMFS consider giving shark fishermen swordfish handgear permits in order to help offset negative economic impacts, while also increasing swordfish landings. NMFS did not propose changes to the permit system pursuant to the rulemaking; however, NMFS will take this suggestion under consideration for future actions. NMFS notes that the swordfish handgear permit is a limited access permit. Therefore, issuing new swordfish handgear permits may result in negative economic impacts to current holders of swordfish handgear permits. In addition, NMFS recently issued new regulations to revitalize the swordfish fishery and may consider additional measures in the future depending on the outcome of the current regulatory changes.

NMFS received a comment questioning whether shark permits will still have any value after the proposed management changes take place. It is difficult to predict the value of shark directed and incidental permits before management measures associated with this Amendment are implemented. It is likely that the value of shark permits may be decreased as a result of quota reductions and reduced retention limits. However, there will still be some demand for shark permits by new entrants into the commercial swordfish and tuna fisheries who will need all three HMS permits to fish.

NMFS received comments indicating that requiring fishermen to land sharks with fins on will change the entire pricing of shark product. Commenters suggested that NMFS could be changing the whole valuation process by requiring that sharks have their fins on. The requirement to land sharks with their fins attached would allow fishermen to leave the fins attached by just a small piece of skin so that the shark could be packed efficiently on ice at sea. Shark fins could then be quickly removed at the dock without having to thaw the shark. Sharks may be eviscerated, bled, and the head removed from the carcass at sea. These measures should prevent any excessive amounts of waste at the dock, since dressing the shark (except removing the fins) can be performed while at sea. While this will result in some changes to the way fishermen process sharks at sea, the transfer of shark product to dealers could remain relatively unchanged because the fins can be removed quickly once the shark has been offloaded. NMFS expects that the market will continue to receive sharks in their log form. While there may be some changes in the way sharks are marketed and priced, it is unlikely that the total ex-vessel value of sharks will change significantly due to the requirement to land sharks with their fins attached.

Description and Estimate of the Number of Small Entities to Which the Final Rule Would Apply

NMFS considers all HMS commercial permit holders to be small entities because they either had average annual receipts less than $4.0 million for fish-harvesting, average annual receipts less than $6.5 million for charter/party boats, 100 or fewer employees for wholesale dealers, or 500 or fewer employees for seafood processors (5 U.S.C. 604(a)(3)). These are the Small Business Administration (SBA) size standards for defining a small versus

large business entity in this industry. A full description of the fisheries affected and the categories and number of permit holders can be found in Amendment 2 to the Consolidated HMS FMP.

The final rule would apply to the 527 commercial shark permit holders in the Atlantic shark fishery based on an analysis of permit holders on October 1, 2007. Of these permit holders, 231 have directed shark permits and 296 hold incidental shark permits. Not all permit holders are active in the fishery in any given year. NMFS estimates that there are 143 vessels with directed shark permits and 155 vessels with shark incidental permits that could be considered actively engaged in fishing, since they reported landing at least one shark in the Coastal Fisheries Logbook from 2003 to 2005.

In addition, the reporting requirements in the final alternatives would also apply to Federal shark dealers. As of October 1, 2007, there were a total of 269 Atlantic shark dealer permit holders. Based on NMFS' understanding of HMS dealer operations, NMFS assumes that each of these dealers would be considered a small business entity with 100 or fewer employees.

The final measures being considered may also impact the types of services HMS CHB permit holders may provide. As of October 1, 2007, there were 4,899 HMS CHB permit holders. It is unknown what portion of these permit holders actively participate in shark fishing or market shark fishing services for recreational anglers.

In addition, some businesses, such as marinas or specialized tournament organizers that hold tournaments may be considered small entities. HMS tournaments are required to register with NMFS. As such, NMFS has estimates on the number of HMS tournaments. However, NMFS may not necessarily know the number of businesses behind the tournament name and contact. Tournaments offering prize categories for sharks may also experience negative economic impacts as a result of NMFS prohibiting two additional species of sharks for retention in recreational fisheries in alternative suites 2 through 4, as well as alternative suite 5 which would allow no possession of any sharks and only allow catch and release fishing. The majority of tournaments specializing in sharks are in the North Atlantic region, specifically Rhode Island, New York, and Massachusetts. In 2007, there were 59 tournaments with prize categories for pelagic sharks and 42 (combined) tournaments for LCS and SCS.

Description of the Projected Reporting, Recordkeeping, and Other Compliance Requirements of the Final Rule, Including an Estimate of the Classes of Small Entities Which Would Be Subject to the Requirements of the Report or Record

The final action requires modifying existing reporting and recordkeeping requirements (5 U.S.C. 604(a)(4)). The research program component in this final rule requires modifications to the existing EFP program and dealer reporting requirements.

The final action modifies the reporting frequency for dealers. The current requirement for dealer reports to be post-marked within 10 days after each reporting period (1st through 15th and 16th through last day of month), would be modified to state that dealer reports must be received by NMFS not later than 10 days after each reporting period (i.e., 25th and 10th of each month). Shark, swordfish, and tuna dealers would have to submit these reports in advance of the 10th and 25th of each month to ensure adequate time for delivery, depending on the means employed for report submission. Requiring that all dealer reports are actually received by NMFS in a more timely fashion would provide more frequent reports of shark landings in order to better assess quantities of sharks landed and whether or not a closure or other management measure is warranted to prevent overfishing. Dealers would still be required to submit reports indicating that no sharks were purchased during inactive periods. NMFS also intends to add a check box to the dealer form for dealers to note whether sharks were landed with fins naturally attached. Requirements for vessel logbooks and observer coverage would remain unchanged. Additional burden is not expected as a result of modifying the regulations to ensure that dealer reports are actually received within 10 days.

The final rule would also create a limited shark research program that would result in changes to existing reporting requirements. Entry into the shark research program would require vessels to submit an application, which would add to the reporting burden for those vessels wishing to apply. Applicants selected to participate in the shark research program under this alternative would also be subject to 100 percent observer coverage as a requirement for eligibility to participate in the program. In addition, selected vessels would continue to report in their normal logbook in addition to the observer program. Vessels in the shark research program, however, would not need to report in the same way as other EFP holders even though they are being issued permits under the EFP program. For example, vessels in the research fishery would not be required to submit interim or annual reports describing their fishing activities. Rather, they would only be required to submit their logbooks per current regulations. Vessels outside the shark research program would still be required to carry an observer if selected and all vessels would still be required to complete logbooks within 48 hours of fishing activity and then submit the logbooks to NMFS within seven days.

Description of the Steps NMFS Has Taken to Minimize the Significant Economic Impact on Small Entities Consistent with the Stated Objectives of Applicable Statutes, Including a Statement of the Factual, Policy, and Legal Reasons for Selecting the Alternative Adopted in the Final Rule and the Reason That Each One of the Other Significant Alternatives to the Rule Considered by NMFS Which Affect Small Entities Was Rejected

One of the requirements of a FRFA is to describe any alternatives to the proposed rule which would accomplish the stated objectives and which minimize any significant economic impacts (5 U.S.C. 604(a)(5)). Additionally, the Regulatory Flexibility Act (5 U.S.C. 603(c)(1)-(4)) lists four general categories of ''significant'' alternatives that would assist an agency in the development of significant alternatives. These categories of alternatives are:

1. Establishment of differing compliance or reporting requirements or timetables that take into account the resources available to small entities;
2. Clarification, consolidation, or simplification of compliance and reporting requirements under the rule for such small entities;
3. Use of performance rather than design standards; and,
4. Exemptions from coverage of the rule for small entities.

In order to meet the objectives of this final rule, consistent with the Magnuson-Stevens Act and the Endangered Species Act (ESA), NMFS cannot exempt small entities or change the reporting requirements only for small entities because all the entities affected are considered small entities. Thus, because NMFS considers all HMS permit holders to be small entities, there are no alternatives discussed that fall under the first and fourth categories described above. NMFS does not know of any performance or design standards

that would satisfy the aforementioned objectives of this rulemaking while, concurrently, complying with the Magnuson-Stevens Act. Thus, there are no alternatives considered under the third category. As described below, NMFS analyzed seven different alternatives in this rulemaking and provides justification for selection of the final action to achieve the desired objective.

The alternatives considered and analyzed have been grouped into five alternative suites. Alternative suite 1 would maintain the current Atlantic shark fishery (no action). Alternative suite 2 would allow only directed shark permit holders to land sharks. Alternative suite 3 would allow directed and incidental shark permit holders to land sandbar and non sandbar LCS as well as SCS and pelagic sharks. Alternative suite 4 would establish a program where vessels with directed or incidental shark permits could participate in a research fishery for sandbar sharks. Only vessels participating in this program could land sandbar sharks. Vessels not participating in the research program could land non-sandbar LCS, SCS, and pelagic sharks. Finally, alternative suite 5 would shut down the commercial Atlantic shark fishery and only allow a catch and release recreational shark fishery. The preferred alternative is suite 4, which would establish a program where a limited number of vessels with directed or incidental shark permits could participate in a research fishery for sharks dependent on the research needs of NMFS.

1. Alternative Suite 1

Alternative suite 1, the status quo alternative, would not impose any significant new economic impacts to small businesses in the HMS Atlantic shark fishery because under this alternative the current LCS quota of 1,017 mt dw, in conjunction with the 4,000 lb LCS directed shark permit trip limit, would be maintained. Under this alternative, the current fishing effort would not likely change which could lead to economic benefits from reduced market uncertainty for fishermen and related businesses in the short term. If gross revenues for directed and incidental permit holders is averaged across the approximately 298 active directed and incidental shark permit holders, then the average annual gross revenues per shark fishing vessel is just over $20,000. However, long term, negative economic impacts could occur if current fishing mortality of sandbar sharks, an economically important species, is not decreased as recommended by the LCS stock assessment, and this species continues to be overfished.

The status quo alternative would maintain the existing closures and would not add any new closures. The three management regions would also remain unchanged. There would also be no additional reporting requirements. Alternative suite 1 would also maintain the trimester seasons, which provides fishermen and dealers with more open seasons. With an annual LCS quota of 1,017 mt dw, spreading the seasons out over the calendar year could potentially result in greater economic stability for fishermen and associated communities. However, if quotas are reduced to those in the final action to comply with the recommendations from the LCS stock assessment, while also maintaining the trimester seasons under status quo, trimester seasons could become less economically stable for fishermen and dealers because of the reduced amount of quota and fishing effort during the calendar year. Maintaining existing closures, reporting requirements, and management regions would likely have little to no economic impacts on effected small businesses.

Alternative suite 1 would also maintain the current bag limit for HMS Angling permit holders at one shark greater than 54 inches per vessel per trip as well as one sharpnose and one bonnethead shark (both of which are in the SCS complex) per person per trip. This would likely result in no new economic impacts for businesses operating recreational fishing charter trips targeting sharks and shark fishing tournaments in the short term.

Overall, alternative suite 1 would likely have the lowest economic impact on small businesses. However, this alternative would likely not meet the objectives of this action. Maintaining the LCS quota of 1,017 mt dw would be inconsistent with the Magnuson-Stevens Act and the recent LCS stock assessment that recommended a TAC of 158.3 mt dw for sandbar sharks for this species to rebuild by 2070. Current fishing effort, under the status quo alternative, would lead to continued overfishing of sandbar, porbeagle and dusky sharks, which could potentially prevent these species from rebuilding in the recommended timeframe. As a result, this alternative was not selected.

2. Alternative Suite 2

Alternative suite 2 would allow only directed shark permit holders to land sharks. In addition, this alternative would remove sandbar sharks from the LCS complex and establish a separate category for sandbar sharks from the LCS complex. The quotas for landing sandbar and non-sandbar LCS would also be reduced. Incidental shark permit holders would not be permitted to land sharks under alternative suite 2. As of 2007, there were 231 directed shark permit holders, 296 incidental shark permit holders, and 269 shark dealer permit holders. One hundred forty-three vessels with directed shark permits and 155 vessels with shark incidental permits reported landing at least one shark in the Coastal Fisheries Logbook from 2003 to 2005 and could be considered active.

Data on gross annual revenues indicate that implementation of alternative suite 2 would result in a significant reduction in revenue for directed shark permit holders. On average, directed permit holders landed 1,286,447 lb dw of sandbar sharks and 1,498,111 lb dw of non-sandbar LCS from 2003 to 2005 based on Federal and state shark dealer reports (landings by permit type were based on percentage of total landings by permit type in the Coastal Fisheries and HMS logbooks). In 2006 ex-vessel prices, this is equivalent to gross revenues of $4,702,031 (assuming 5 percent of the landings are fins and 95 percent of the landings are carcass weight). If gross revenues for directed permit holders are averaged across the approximately 143 active directed shark permit holders, then the average annual gross revenues per shark fishing vessel is just under $33,000 from shark revenues. Under alternative suite 2, gross revenues for directed permit holders would be estimated to be $1,333,417. This is a 72-percent overall reduction in gross revenues compared to the period from 2003 to 2005. These reduced gross revenues averaged across the 143 active directed permit holders are just over $9,000 per directed shark fishing vessel. This estimated reduction in revenue from shark landings could affect the profitability and even viability of some marginal shark fishery operations. Operations that have permits in other fisheries and can easily diversify are less likely to be as affected as those marginal operations. Nevertheless, the profitability of all directed shark fishing vessels would likely be reduced. Because the states of Florida, New Jersey, and North Carolina have the most directed shark permits, these states would be most negatively impacted by alternative suite 2.

Directed shark permit holders using PLL gear would also see reduction of revenues under alternative suite 2 because retention of sandbar sharks on PLL gear would be prohibited. On average, 80,825 lb dw of sandbar sharks were reported landed on PLL gear by

directed shark permit holders from 2003 to 2005 (HMS logbook data). In 2006 ex-vessel prices, this is equivalent to $117,510 in gross revenues. Given an average of 16.7 vessels landing sandbar sharks with PLL gear from 2003 to 2005, prohibition of sandbar sharks on PLL gear could result in a loss of gross revenues of $7,037 per vessel.

Data on the reduction of per trip revenues also show a decline in revenue for directed permit holders. Under alternative suite 2, directed permit holders would be limited to 8 sandbar sharks per trip and 21 non-sandbar LCS per trip. In comparison, data indicate that under status quo, which has a 4,000 lb dw LCS trip limit, the average number of sandbars and non-sandbar LCS landed per trip is 35 sandbars and 32 non-sandbar LCS for all gear types reported in the Coastal Fisheries and HMS Logbooks. Based on 2006 ex-vessel prices, this is equivalent to $4,101 per trip. Revenue estimates on a regional trip basis of the status quo alternative were also based on species composition data attained from the BLL observer program data. Observer data indicate that between 2005 and 2006, 69 sandbar sharks and 35 non-sandbar LCS were caught per trip in the South Atlantic region, and 30 sandbar sharks and 83 non-sandbar LCS were caught per trip in the Gulf of Mexico region. Based on these numbers and 2006 ex-vessel prices, revenues from South Atlantic trips are currently averaged at $4,743/trip and Gulf of Mexico trip revenues averaged $4,101 per trip.

Thus, given that the retention limits under alternative suite 2 (8 sandbars/trip and 21 non-sandbar LCS/trip), the average revenue per trip is estimated to decrease. The reduced non-sandbar LCS retention limit of 21 sharks per trip is based on the average ratio of sandbars to non-sandbar LCS caught in the South Atlantic and Gulf of Mexico regions to limit sandbar shark discards by fishermen deploying non-selective gear. In the Gulf of Mexico, the ratio of sandbars to other LCS caught is 1:4 which, based on an 8 sandbar per trip retention limit, would equal 32 non-sandbar LCS per trip. However, such a high non-sandbar LCS retention limit would result in sandbar discards in the South Atlantic (approximately 65.3 mt dw). Therefore, a 21 non-sandbar LCS/trip retention limit was set to balance discards versus catch in the two regions. This results in approximately 5 sandbar sharks being caught in the Gulf of Mexico region when the non-sandbar LCS retention limit/trip is filled (and therefore, only 86.1 mt dw of the sandbar quota would be filled). Therefore, gross revenues on a trip basis are estimated to be $1,262 per trip in the South Atlantic and $1,333 per trip in the Gulf of Mexico. From 2003 to 2005, there were 124 vessels that averaged more than 324 lb dw (or 8 sandbar sharks) of sandbar/trip.

Incidental permit holders would also experience revenue declines under alternative suite 2 because they would be prohibited from landing sharks. On average, 66 incidental permit holders landed 12,994 lb dw per year of sandbar sharks and 46,333 lb dw per year of non-sandbar LCS from 2003 to 2005 based on Federal and state shark dealer reports and Coastal Fisheries and HMS logbook data. Using 2006 ex-vessel prices, this is equivalent to gross revenues of $106,491 (assuming 5 percent of the landings are fins and 95 percent of the landings are carcass weight). Gross revenues averaged across the 66 vessels with incidental permits landing sharks were $1,614 per vessel. Since incidental permit holders would not be able to land any sharks under alternative suite 2, the 66 active vessels would be most negatively affected by this alternative suite. The states of Florida, Louisiana, New Jersey, and North Carolina had the most incidental shark permit holders as of 2007 (144, 37, 20, and 16, respectively).

Alternative suite 2 would also require dealers to submit reports within 24 hours of shark products being purchased. There could be negative economic impacts to Atlantic shark dealers as a result of the increased reporting requirement associated with this alternative. Currently, shark dealer reports are required to submit bimonthly reports, regardless of whether the dealer actually purchased any shark products. Reporting frequency would be increased to 24 hours of when shark products were purchased. While the increased reporting burden would not result in direct costs to the shark dealer, it would result in additional time spent submitting dealer reports. This represents an opportunity cost for dealers since that time could have been spent conducting other activities related to their business. Furthermore, since submitting the reports via regular mail would no longer be feasible, in order to comply with the requirement that dealer reports must be received by NMFS within 24 hours, it is assumed that dealers would have to submit dealer reports electronically or via facsimile. Dealers that do not currently possess a computer or fax machine would have to purchase one of these items. The increased reporting burden implemented in this alternative suite would be subject to approval under the PRA. Reporting requirements for shark vessel permit holders, including the need to carry an observer if selected and the need to submit vessel logbooks within seven days of completing a fishing trip would not be modified, resulting in neutral economic impacts.

The other provisions of alternative suite 2 are the same as in alternative suite 4, which is the final action for this rulemaking. These provisions include: maintaining the 60 mt shark display and research quota; placement of porbeagle sharks on the prohibited list; quota carryover limited to 50 percent of base quota for species not overfished; no carryover for overfished, overfishing or unknown species; sharks fins must remain on the shark; removal of regions and seasons; and limiting the shark species that can be landed recreationally. The effects of these provisions are set forth in the discussion of alternative suite 4.

This alternative suite was not selected for two primary reasons. First, this alternative does not address the impacts of continuing to catch sandbar sharks incidentally. These vessels will likely continue to incidentally catch sandbar sharks but then, under this alternative, those sharks would be required to be discarded. These discards would reduce potential revenues and possibly operating efficiency of vessels possessing incidental shark permits. Regulatory discards would likely lead to increases in mortality and slow efforts to end overfishing. Second, the 24 hour dealer reporting that would be required to effectively manage quotas would result in a significant increase in reporting burden for dealers. This alternative would therefore not minimize the economic cost to dealers in comparison to the preferred alternative.

3. Alternative Suite 3

Under alternative suite 3, the quotas for landing sandbar and non-sandbar LCS would also be reduced to the same level as that in alternative suite 2. However, because alternative suite 3 would allow directed and incidental shark permit holders to land sandbar and non-sandbar LCS as well as SCS and pelagic sharks, the available sandbar and non-sandbar LCS quota would be spread over a larger universe of commercial permit holders. Unlike the status quo or alternative suite 2, the retention limits for sandbar sharks and non-sandbar LCS would be the same for both directed and incidental permit holders. Since directed permit holders presumably make a greater percentage of their gross revenues from shark landings, they are expected to have larger negative socioeconomic impacts

compared to incidental permit holders. (Revenues for incidental permit holders are actually expected to increase under this alternative.) The states of Florida, New Jersey, and North Carolina have the most directed permit holders. As with alternative suite 2, shark dealers could also experience negative impacts due to the reduction in the sandbar and other LCS quotas and retention limits, which would reduce the overall amount of sharks being landed.

As stated under alternative suite 2, on average, directed permit holders landed 1,286,447 lb dw of sandbar sharks per year and 1,498,111 of non-sandbar LCS per year from 2003 to 2005 based on Federal and state shark dealer reports and logbook data. In 2006 ex-vessel prices, this is equivalent to gross revenues of $4,702,031 (assuming 5 percent of the landings are fins and 95 percent of the landings are carcass weight). However, under alternative 3, the available sandbar and non-sandbar LCS quota would be spread over directed and incidental permit holders. Based on the retention limit of 4 sandbar sharks and 10 non-sandbar LCS per vessel per trip, it is estimated that 105.9 mt dw (233,467 lb dw) of the sandbar quota and 229.2 mt dw (505,294 lb dw) of the non-sandbar LCS quota could be landed under alternative suite 3. Logbook data from 2003 and 2005 showed that directed permit holders take, on average, 1,108 trips per year; the total number of shark trips taken by all permit holders was 1,143 trips. Thus, directed permit holders exhibited approximately 78 percent of the total fishing effort for sharks from 2003-2005. Based on this past effort, NMFS estimates that of the total sandbar and non-sandbar LCS quotas, approximately 83 mt dw (183,073 lb dw) of sandbar quota and 180 mt dw (396,225 lb dw) of the non-sandbar LCS quota would be harvested by directed permit holders. Based on 2006 ex-vessel prices, this is equivalent to $1,015,162 gross revenues for directed permit holders. These gross revenues indicate a 78 percent overall reduction compared to the period from 2003 to 2005 (gross revenues based on current directed permit holders' landings were $4,702,031). Again, the states of Florida, New Jersey, and North Carolina have the most directed permit holders.

The data indicate that directed shark permit holders would experience a loss in revenue under alternative suite 3 greater than under alternative suite 2, given that the available quota is shared with incidental permit holders under alternative suite 3. As stated in alternative 2, the status quo revenue was based on a 4,000 lb dw LCS trip limit for directed shark permit holders with average gross revenues in the South Atlantic of $4,743 per trip and average gross revenues in the Gulf of Mexico of $5,853 per trip. Under alternative suite 3, the retention limits would be 4 sandbars per trip and 10 non-sandbar LCS per trip. However, since the ratio of sandbars to non-sandbar LCS caught in the Gulf of Mexico is 1:4, NMFS estimates that approximately 3 sandbar sharks would be caught in the Gulf of Mexico region when the 10 non-sandbar LCS retention limit/trip is filled (10 non-sandbar LCS / 4 = 2.5 sandbar sharks). Therefore, gross revenues on a trip basis are estimated to be $610 per trip in the South Atlantic and $670 per trip in the Gulf of Mexico. From 2003 to 2005, there were 128 vessels that averaged more than 163 lb dw (or 4 sandbar sharks) of sandbar/trip. Therefore, these vessels would be most negatively affected by retention limits under alternative suite 3.

The revenue of incidental shark permit holders is expected to increase under alternative suite 3. On average, incidental permit holders landed 12,994 lb dw of sandbar sharks and 46,333 lb dw of non-sandbar LCS based on Federal and state shark dealer reports and logbook data. In 2006 ex-vessel prices, this is equivalent to gross revenues of $106,491 (assuming 5 percent of the landings are fins and 95 percent of the landings are carcass weight). The available sandbar and non-sandbar LCS quotas would be averaged over directed and incidental permit holders under alternative suite 3. Based on past effort, it was assumed 305 trips could be made by incidental permit holders. This is 22 percent of the expected fishing effort. Therefore, given the 105.9 mt dw (233,467 lb dw) of the sandbar quota and 229.2 mt dw (505,294 lb dw) of the non-sandbar LCS quota that could be landed under alternative suite 3, approximately 23 mt dw (50,395 lb dw) of sandbar quota and 50 mt dw (109,069 lb dw) of the non-sandbar LCS quota are anticipated to be landed by incidental permit holders. Based on 2006 ex-vessel prices, this is equivalent to $279,441 gross revenues for incidental permit holders. This would result in gross revenues that are 2.7 times higher compared to 2003 to 2005 (gross revenues based on current incidental permit holders' landings were $106,491).

This increase in gross revenues is due to the increase in retention limits for incidental permit holders. Under the status quo, incidental permit holders can retain 5 sharks from the LCS complex. However, under alternative suite 3, incidental permit holders would be able to retain 4 sandbars and 10 non-sandbar LCS or 14 LCS total. This retention limit is almost 3 times higher than what is currently allowed under the status quo. On average, incidental permit holders have been landing 2 sandbar sharks and 3 non-sandbar LCS per trip. Based on 2006 ex-vessel prices, this is equivalent to $307 per trip. However, under alternative suite 3, incidental permit holders would make equivalent gross revenues per trip as directed permit holders: $610 per trip in the South Atlantic and $670 per trip in the Gulf of Mexico. This would result in gross revenues for incidental permit holders that are 2 to 3 times higher than gross revenues in 2003 to 2005 depending on future fishing effort and catch composition. Therefore, there would be positive economic impacts for incidental permit holders under alternative suite 3. Since approximately 66 vessels with incidental permit holders landed sandbar sharks or non-sandbar LCS in 2003 to 2005 in the Coastal Fisheries and HMS Logbooks, these 66 vessels would have the largest economic benefits under alternative suite 3. However, if sharks become profitable for incidental permit holders under alternative suite 3, then more vessels with incidental permits may actively land sandbars and non-sandbar LCS in the future. Finally, the states of Florida, Louisiana, New Jersey, and North Carolina had the most incidental shark permit holders in 2007. Therefore, these states would see the largest socioeconomic benefits for incidental permit holders under alternative suite 3.

The other provisions of alternative suite 3 are the same as alternative suite 4, which is the final action for this rulemaking. These provisions include maintaining the 60 mt shark display and research quota; placement of porbeagle sharks on the prohibited list; quota carryover limited to 50 percent of base quota for species not overfished; no carryover for overfished, overfishing or unknown species; sharks fins must remain on the shark; dealer reports received within 10 days of purchase; removal of regions and seasons; and limiting the shark species that can be landed recreationally.

This alternative suite was not selected as the preferred alternative primarily based on its failure to achieve the ecological objectives of this rule and its economic impacts. Despite the time/area closures, alternative suite 3 would have a smaller reduction in dead discards of dusky sharks compared to alternative suite 2 since sandbar sharks would be allowed to be retained on PLL gear under alternative suite 3.

Negative economic impacts under alternative suite 3 are expected for directed permit holders (78-percent reduction in gross revenues compared to the status quo) as a result of the four sandbar per vessel per trip retention limit. Given that retention limits for sandbar and non-sandbar LCS are significantly lower than the limit under the status quo (91 and 69-percent reduction in sandbar and non-sandbar LCS retention limits, respectively, for directed permit holders), it is anticipated that there would be no directed shark fishery as a result of alternative suite 3. While an observer program would still operate under alternative suite 3, without a directed shark fishery, it is anticipated that the fishery dependent data collection would be limited, which could compromise data collection for future stock assessments. Alternative suite 4 should accomplish the necessary reductions in quota, retention limits, and fishing effort to prevent overfishing and allow stocks to rebuild while collecting valuable scientific data for NMFS. Therefore, due to concerns over dusky discards, quota monitoring, and data collection, NMFS is not implementing alternative suite 3 at this time.

4. Alternative Suite 4

Alternative suite 4, the final action, establishes a program where vessels with directed or incidental shark permits could participate in a small research fishery for sandbar sharks that would harvest the entire 116.6 mt dw sandbar quota. There would be 100 percent observer coverage on each research vessel, and only vessels participating in this program could land sandbar sharks. Vessels not participating in the research program could land non-sandbar LCS, SCS, and pelagic sharks.

Alternative suite 4 was selected because it meets the objectives of this rulemaking while minimizing some of the economic impacts. Those objectives include: implement rebuilding plans for sandbar, dusky, and porbeagle sharks; provide an opportunity for the sustainable harvest of blacktip sharks and other sharks, as appropriate; prevent overfishing of Atlantic sharks; analyze BLL time/area closures and take necessary action, as appropriate; and improve, to the extent practicable, data collections or data collection programs. As detailed in the economic analysis in chapters 4 and 6 of Amendment 2 to the Consolidated HMS FMP, it is estimated that vessels in the shark research fishery could make $437,963 in gross revenues of sandbar and non-sandbar LCS landings under the adjusted quota. Since 5 to 10 vessels are anticipated to participate in the research fishery, NMFS estimates that an individual vessel could make between $87,593 (i.e., 5 boats) to $43,796 (i.e., 10 boats) in gross revenues on sandbar shark and non-sandbar LCS landings. However, the vessels operating outside of the research fishery would have an adjusted regional non-sandbar LCS base quota of 187.8 mt dw in the Atlantic region and 390.5 mt dw in the Gulf of Mexico region. In 2006 ex-vessel prices, this is equivalent to $516,285 in the Atlantic region and $1,273,269 in gross revenues in the Gulf of Mexico region. Divided by the remaining vessels it is estimated that the average gross revenues from shark per vessel would be just over $2,000 per trip.

In addition, under the final action, porbeagle sharks would be authorized in recreational and commercial fisheries, but under a reduced TAC of 11.3 mt dw. Of the TAC, 1.7 mt dw would be available for harvest in commercial fisheries. Currently, the commercial quota for porbeagle sharks is 92 mt dw per year, however, this commercial quota has never been met. NMFS set new TAC and commercial quotas for porbeagle sharks based on present effort levels. Based on quota monitoring (which includes vessel trip reports) from 2003 to 2006, on average, 3,867 lb dw (1.7 mt dw) of porbeagle sharks were landed per year. Based on 2006 ex-vessel prices, this is equivalent to $7,378 in gross revenues. Since commercial fishermen would be allowed to continue to land porbeagle sharks at this level, there are no anticipated economic impacts of implementing the TAC. In addition, recreational anglers would still be allowed to land porbeagle sharks. Therefore, there are no negative economic impacts for recreational fishermen associated with the TAC.

Data indicate that the preferred alternative maintains the annual gross revenues per vessel for vessels operating in the research fishery, while allowing other vessels outside of the research fishery to generate revenues at reduced levels. For example, in the no action alternative, it was estimated that if gross revenues for directed and incidental permit holders are averaged across the approximately 296 active directed and incidental shark permit holders, then the average annual gross revenues per shark fishing vessel is just over $20,000. Using the average landings for directed permit holder from 2003 to 2005, it is estimated that the 143 active directed permit holders generated average annual gross shark revenues of just under $33,000 from sharks. Under alternative 2, the reduced gross revenues averaged across the 143 active directed permit holders are estimated to be just over $9,000 per directed shark fishing vessel and $1,221 per vessel per year for incidental permit holders that land sharks. Under alternative 3 this is reduced further to approximately $7,000 ($1,015,162 gross revenues/143 vessel) per directed shark fishing vessel per year.

Alternative suite 4 has less economic impact on shark fishermen than alternative suite 5 (discussed below), but has greater impacts in the short-run than the status quo alternative. By allowing a limited number of historical participants to continue to harvest sharks under the research fishery, NMFS ensures that data for stock assessments and life history samples would continue to be collected. After comparing the alternative suites, NMFS determined that alternative suite 4 is the alternative that best meets the objectives of this rule while minimizing the economic impacts to shark permit holders.

5. Alternative Suite 5

Alternative suite 5 would have significant economic and social impacts on a variety of small entities, including: commercial shark permit holders, shark dealers, CHB and tournament operators, gear manufacturers, bait and ice suppliers, and other secondary industries dependent on the shark fishery. The level of economic impact would be directly proportional to the amount of revenues that each entity has realized from past participation in the shark fishery. Permit holders would be impacted differently depending on the quantity of sharks landed in the past.

Vessels targeting sharks (directed permit holders) landed an average of 1,263 mt dw of LCS, 223 mt dw SCS, and 173 mt dw pelagic sharks per year between 2003 to 2005 based on shark dealer landings and effort data from the Coastal Fisheries and HMS logbooks. The gross revenues based on 2006 ex-vessel prices of these landings are estimated at $4,702,031, $681,880, and $764,512 for LCS, SCS, and pelagic sharks, respectively. While it is assumed that few directed shark permit holders subsist entirely on revenues attained from the shark fishery, impacts would still be severe for those participants that depend on income from the directed shark fishery at certain times of the year. Because of the extensive economic impacts to shark directed permit holders as a result of this alternative suite, it is assumed that directed permit holders would likely pursue one of the following options as a result of closing

the Atlantic shark fishery: (1) transfer fishing effort to other fisheries for which they are already permitted (snapper grouper, king and Spanish mackerel, tilefish, lobster, dolphin/wahoo, etc), (2) acquire the necessary permits to participate in other fisheries (both open access and/or limited access fisheries), or (3) relinquish all permits and leave the fishing industry.

Incidental permit holders would face negative economic and social impacts as a result of closing the Atlantic shark fishery; however, these impacts would not be as severe as those experienced by directed permit holders. It is assumed that incidental permit holders receive the majority of their fishing income from participation in other fisheries, depending on the region and the type of gear predominantly fished (i.e., swordfish, tunas, snapper grouper, tilefish, dolphin/wahoo, lobster, etc.). NMFS estimates that, on average, between 2003 and 2005 incidental permit holders landed 26.9 mt dw LCS, 17.3 mt dw SCS, and 45.5 mt dw pelagics per year based on shark dealer landings and effort data from the Coastal Fisheries and HMS logbooks. This equates in gross revenues, based on 2006 ex-vessel prices for these landings, of $106,491, $52,882, and $201,061 for the respective species complexes. Incidental permit holders would likely have to increase effort in these other fisheries to replace lost revenues from landing sharks. Furthermore, these vessels may seek other permits (open access or limited access transferred from another vessel) or leave the fishing industry entirely.

This alternative suite could also have negative economic and social impacts for shark dealers as they would no longer be authorized to purchase shark products from Federally permitted shark fishermen. Shark dealers also maintain permits to purchase other regionally caught fish products. Due to the brevity of the LCS shark fishing season, which is the shark fishery that accounts for the majority of the shark product revenue due to the fin value, many dealers also get revenue from purchasing fish products other than sharks. The majority of shark dealer permit holders hold permits to purchase other fish products, including swordfish, tunas, snapper grouper, tilefish, mackerel, lobster, and dolphin/wahoo among others. It is difficult to estimate, on an individual dealer basis, the percentage of revenues received exclusively from shark products.

Shark fin dealers, specializing in the purchase of shark fins from Federal and state permitted dealers, would also experience negative social and economic impacts as a result of closing the shark fishery. These dealers receive virtually all of their income from purchasing shark fins and shipping them to exporters. Exporters then transport the fins to global and domestic markets. This alternative suite would likely force shark fin dealers to leave the industry or focus on purchasing other fishery products, resulting in significant economic impacts to the individuals involved in this trade.

It is difficult to estimate the economic and social impacts that would be experienced by various small entities that support the shark fishery, e.g., purveyors of bait, ice, fishing gear, and fishing gear manufactures. However, these impacts would likely be negative. It is difficult to estimate these impacts as it is uncertain to what extent vessels that were fishing for sharks would redistribute their fishing effort to other fisheries, or simply cease fishing operations. If the majority of vessels affected by a shark fishery closure simply displace effort to other fisheries, it is assumed that they would still be dependent on small entities for their bait, ice, and gear as these are products essential for fishing excursions targeting any species. Redistributing effort to other fisheries would mitigate negative economic impacts. However, if a significant number of vessels simply cease fishing operations or scale back considerably, then severe economic consequences would be imparted on these support industries as a result.

Reporting and observer requirements would also change under alternative suite 5. Alternative suite 5 would increase the proportion of fishermen completing the Coastal Fisheries Logbook who are then selected to report information on fish that are discarded. Currently, 20 percent of the fishermen completing this logbook are selected. This percentage would be increased to facilitate improved data available for shark interactions with longline and gillnet gear. This information would be especially useful because sharks could no longer be landed and the existing logbook only requires fishermen to provide data on landed fish. Increasing the number of fishermen who are selected to provide this data would result in negative economic and social impacts because it would require additional paperwork to be filled out. Because NMFS would close the fishery under this alternative suite, vessels would no longer be required to take an observer. Shark dealers would also no longer be required to submit dealer reports regarding sharks purchased.

Seasons and regions for the commercial Atlantic shark fishery would no longer apply as this alternative suite would close the fishery.

Closing the Atlantic recreational shark fishery would have negative economic and social impacts, particularly for CHB operators who specialize in landing sharks and operators of shark tournaments that have prize categories for landing sharks. It is difficult to estimate the number of CHB operators that specialize in shark charters as the permit covers any participant targeting swordfish, sharks, tunas, and billfish. Many CHB operators target a variety of species depending on client interests, weather, time of year, and oceanographic conditions. CHB operators specializing in shark fishing charters would have to target other HMS or non HMS species to replace revenues lost as a result of customers not being able to land sharks. However, not all customers necessarily want to land sharks. CHB operators would still be able to catch sharks; however, all sharks (regardless of species) would need to be released in a manner that maximizes their chances of survival. Catering business operations to clientele interested in catch and release fishing for sharks might mitigate some of the negative economic impacts. Shark tournaments that reward prizes for landing sharks would be negatively impacted as a result of this alternative suite. In 2007, there were 59 tournaments with prize categories for pelagic sharks and 42 (combined) tournaments for LCS and SCS. The majority of these tournaments target pelagic sharks and are held in the North Atlantic and Gulf of Mexico regions. These tournaments would either modify their rules to only allow points/prizes for released sharks or these tournaments would cease to exist. Economic impacts on small entities such as restaurants, hotels, gear manufacturers, retail stores selling fishing supplies, and marinas in the vicinity of where these tournaments are held would also experience negative economic impacts.

HMS Angling permit holders would also experience negative impacts, despite the fact that they would still be able to catch and release sharks. Landings would not be permitted by any recreational anglers as a result of this alternative suite.

Closing the Atlantic shark fishery would have negative economic impacts on global shark fin markets. As a result of this alternative suite, U.S. flagged vessels would no longer be able to contribute to the global demand for shark fins. This would disadvantage U.S. shark fishermen as global markets would likely need to purchase their shark fins from other markets. However,

the United States is not a significant producer of shark products globally. Based on data from the United Nations Food and Agriculture Organization (FAO), less than one percent of global shark landings occur in the U.S. Atlantic Ocean.

While alternative suite 5 would meet the objectives of this rule, it would have the highest negative economic impacts of the alternatives considered. There would be significant reductions in revenues for shark dealers and fishing vessels involved in the shark fishery. Some small businesses dependent on commercial shark fishing may cease operating as a result of prohibiting the commercial harvest of shark species. Therefore, this alternative was not selected.

Small Entity Compliance Guide

Section 212 of the Small Business Regulatory Enforcement Fairness Act of 1996 states that, for each rule or group of related rules for which an agency is required to prepare a FRFA, the agency shall publish one or more guides to assist small entities in complying with the rule, and shall designate such publications as ''small entity compliance guides.'' The Agency shall explain the actions a small entity is required to take to comply with a rule or group of rules. Copies of the compliance guide for this final rule are available (see **ADDRESSES**).

List of Subjects

50 CFR Part 600

Fisheries, Fishing, Fishing vessels, Foreign relations, Penalties, Reporting and recordkeeping requirements.

50 CFR Part 635

Fisheries, Fishing, Fishing vessels, Foreign relations, Imports, Penalties, Reporting and recordkeeping requirements, Treaties.

Dated: June 16, 2008.

John Oliver,

Deputy Assistant Administrator for Operations, National Marine Fisheries Service.

■ For the reasons set out in the preamble, 50 CFR parts 600 and 635 are amended as follows:

Chapter VI

PART 600—MAGNUSON-STEVENS ACT PROVISIONS

■ 1. The authority citation for part 600 continues to read as follows:

Authority: 5 U.S.C. 561 and 16 U.S.C. 1801 *et seq.*

■ 2. In § 600.1203, paragraph (a)(9) is revised to read as follows:

§ 600.1203 Prohibitions.

(a) * * *

(9) Fail to maintain a shark in the form specified in §§ 600.1204(h) and 635.30(c) of this chapter.

* * * * *

■ 3. In § 600.1204, paragraphs (h) and (j) are revised to read as follows:

§ 600.1204 Shark finning; possession at sea and landing of shark fins.

* * * * *

(h) A person who owns or operates a vessel that has been issued a Federal Atlantic commercial shark limited access permit and who lands shark in or from the U.S. EEZ in an Atlantic coastal port must comply with regulations found at § 635.30(c) of this chapter.

* * * * *

(j) No person aboard a vessel that has been issued a Federal Atlantic commercial shark limited access permit shall possess on board shark fins without the fins being naturally attached to the corresponding carcass(es), although sharks may be dressed at sea.

* * * * *

PART 635—ATLANTIC HIGHLY MIGRATORY SPECIES

■ 4. The authority citation for 50 CFR part 635 continues to read as follows:

Authority: 16 U.S.C. 971 *et seq.*; 16 U.S.C. 1801 *et seq.*

■ 5. In § 635.2, the definitions of ''First receiver'', ''Naturally attached'', ''Non-sandbar LCS'', and ''Shark research permit'' are added in alphabetical order and the definitions of ''Dress'' and ''Dressed weight (dw)'' are revised to read as follows:

§ 635.2 Definitions.

* * * * *

Dress, for swordfish, tunas, and billfish, means to process a fish by removal of head, viscera, and fins, but does not include removal of the backbone, halving, quartering, or otherwise further reducing the carcass. For sharks, dress means to process a fish by removal of head and viscera, but does not include removal of the fins, backbone, halving, quartering, or otherwise further reducing the carcass.

Dressed weight (dw), for swordfish, tunas, and billfish, means the weight of a fish after it has been dressed. For sharks, dressed weight means the weight of a fish after it has been dressed and had its fins, including the tail, removed.

* * * * *

First receiver means any entity, person, or company that takes, for commercial purposes (other than solely for transport), immediate possession of the fish, or any part of the fish, as the fish are offloaded from a fishing vessel of the United States, as defined under § 600.10 of this chapter, whose owner or operator has been issued, or should have been issued, a valid permit under this part.

* * * * *

Naturally attached refers to shark fins that remain attached to the shark carcass via at least some portion of uncut skin.

* * * * *

Non-sandbar LCS means one of the species, or part thereof, listed under heading A of Table 1 in Appendix A of this part other than the sandbar shark (*Carcharhinus plumbeus*).

* * * * *

Shark research permit means a permit issued to catch and land a limited number of sharks to maintain time series for stock assessments and for other scientific research purposes. These permits may be issued only to the owner of a vessel who has been issued either a directed or incidental shark LAP. The permit is specific to the commercial shark vessel and owner combination and is valid only per the terms and conditions listed on the permit.

* * * * *

■ 6. In § 635.4, paragraphs (a)(5) and (g)(2) are revised to read as follows:

§ 635.4 Permits and fees.

* * * * *

(a) * * *

(5) *Display upon offloading.* Upon offloading of Atlantic HMS, the owner or operator of the harvesting vessel must present for inspection the vessel's HMS Charter/Headboat permit; Atlantic tunas, shark, or swordfish permit; and/or the shark research permit to the first receiver. The permit(s) must be presented prior to completing any applicable landing report specified at § 635.5(a)(1), (a)(2), and (b)(2)(i).

* * * * *

(g) * * *

(2) *Shark.* A first receiver, as defined in § 635.2, of Atlantic sharks must possess a valid dealer permit.

* * * * *

■ 7. In § 635.5, paragraphs (b)(1)(i), (b)(1)(ii), and (b)(1)(iv) are revised to read as follows:

§ 635.5 Recordkeeping and reporting.

* * * * *

(b) * * *

(1) * * *

(i) Dealers that have been issued or should have been issued an Atlantic

tunas, swordfish, and/or sharks dealer permit under § 635.4 must submit to NMFS all reports required under this section. All reports must be species-specific, must include information about all HMS landed, regardless of where harvested or whether the vessel is federally permitted under § 635.4 and, for sharks, must specify the total shark fin weight separately from the weight of the shark carcass. As stated in § 635.4(a)(6), failure to comply with these recordkeeping and reporting requirements may result in the existing dealer permit being revoked, suspended, or modified, and in the denial of any permit applications.

(ii) Reports of Atlantic tunas, swordfish, and/or sharks received by dealers from U.S. vessels, as defined under § 600.10 of this chapter, on the first through the 15th of each month, must be received by NMFS not later than the 25th of that month. Reports of Atlantic tunas, swordfish, and/or sharks received on the 16th through the last day of each month must be received by NMFS not later than the 10th of the following month. If a dealer issued an Atlantic tunas, swordfish, or sharks dealer permit under § 635.4 has not received any Atlantic HMS from U.S. vessels during a reporting period as specified in this section, he or she must still submit the report required under paragraph (b)(1)(i) of this section stating that no Atlantic HMS were received. This negative report must be received by NMFS for the applicable reporting period as specified in this section. This negative reporting requirement does not apply for bluefin tuna.

* * * * *

(iv) The dealer may mail or fax such report to an address designated by NMFS or may hand-deliver such report to a state or Federal fishery port agent designated by NMFS. If the dealer hand-delivers the report to a port agent, the dealer must deliver such report for Atlantic tunas, swordfish, or sharks no later than the prescribed received-by date for the reporting period, as required in paragraphs (b)(1)(i) and (ii) of this section.

* * * * *

■ 8. In § 635.21, paragraphs (d)(1)(i), (d)(1)(ii), and (d)(3)(ii) are revised, and paragraph (d)(1)(iii) is added to read as follows:

§ 635.21 Gear operation and deployment restrictions.

* * * * *

(d) * * *

(1) * * *

(i) The mid-Atlantic shark closed area from January 1 through July 31 each calendar year;

(ii) The areas designated at § 622.33(a)(1) through (3) of this chapter, year-round; and

(iii) The areas described in paragraphs (d)(1)(iii)(A) through (H) of this section, year-round.

(A) *Snowy Grouper Wreck.* Bounded by rhumb lines connecting, in order, the following points:

Point	North lat.	West long.
A	33°25′	77°04.75′
B	33°34.75′	76°51.3′
C	33°25.5′	76°46.5′
D	33°15.75′	77°00.0′
A	33°25′	77°04.75′

(B) *South Carolina A.* Bounded on the north by 32°53.5′ N. lat.; on the south by 32°48.5′ N. lat.; on the east by 78°04.75′ W. long.; and on the west by 78°16.75′ W. long.

(C) *Edisto.* Bounded on the north by 32°24′ N. lat.; on the south by 32°18.5′ N. lat.; on the east by 78°54.0′ W. long.; and on the west by 79°06.0′ W. long.

(D) *Charleston Deep Artificial Reef.* Bounded by rhumb lines connecting, in order, the following points:

Point	North lat.	West long.
A	32°04′	79°12′
B	32°08.5′	79°07.5′
C	32°06′	79°05′
D	32°01.5′	79°09.3′
A	32°04′	79°12′

(E) *Georgia.* Bounded by rhumb lines connecting, in order, the following points:

Point	North lat.	West long.
A	31°43′	79°31′
B	31°43′	79°21′
C	31°34′	79°29′
D	31°34′	79°39′
A	31°43′	79°31′

(F) *North Florida.* Bounded on the north by 30°29′ N. lat.; on the south by 30°19′ N. lat.; on the east by 80°02′ W. long.; and on the west by 80°14′ W. long.

(G) *St. Lucie Hump.* Bounded on the north by 27°08′ N. lat.; on the south by 27°04′ N. lat.; on the east by 79°58′ W. long.; and on the west by 80°00′ W. long.

(H) *East Hump.* Bounded by rhumb lines connecting, in order, the following points:

Point	North lat.	West long.
A	24°36.5′	80°45.5′
B	24°32′	80°36′
C	24°27.5′	80°38.5′
D	24°32.5′	80°48′
A	24°36.5′	80°45.5′

* * * * *

(3) * * *

(ii) *Handling and release requirements.* Sea turtle bycatch mitigation gear, as required by paragraph (d)(3)(i) of this section, must be used to disengage any hooked or entangled sea turtle as stated in paragraph (c)(5)(ii) of this section. This mitigation gear should also be employed to disengage any hooked or entangled species of prohibited sharks as listed under heading D of Table 1 of Appendix A of this part, any hooked or entangled species of sharks that exceed the retention limits as specified in § 635.24(a), and any hooked or entangled smalltooth sawfish. In addition, if a smalltooth sawfish is caught, the fish should be kept in the water while maintaining water flow over the gills and the fish should be examined for research tags. All smalltooth sawfish must be released in a manner that will ensure maximum probability of survival, but without removing the fish from the water or any research tags from the fish.

* * * * *

■ 9. In § 635.22, paragraph (c) is revised to read as follows:

§ 635.22 Recreational retention limits.

* * * * *

(c) *Sharks.* (1) One of each of the following sharks may be retained per vessel per trip, subject to the size limits described in § 635.20(e): any of the non-ridgeback sharks listed under heading A.2 of Table 1 in Appendix A of this part, tiger (*Galeocerdo cuvieri*), blue (*Prionace glauca*), common thresher (*Alopias vulpinus*), oceanic whitetip (*Carcharhinus longimanus*), porbeagle (*Lamna nasus*), shortfin mako (*Isurus oxyricnchus*), Atlantic sharpnose (*Rhizoprionodon terraenovae*), finetooth (*C. isodon*), blacknose (*C. acronotus*), and bonnethead (*Sphyrna tiburo*).

(2) In addition to the shark listed under paragraph (c)(1) of this section, one Atlantic sharpnose shark and one bonnethead shark may be retained per person per trip. Regardless of the length

of a trip, no more than one Atlantic sharpnose shark and one bonnethead shark per person may be possessed on board a vessel.

(3) No prohibited sharks, including parts or pieces of prohibited sharks, which are listed in Table 1 of Appendix A to this part under prohibited sharks, may be retained regardless of where harvested.

(4) The recreational retention limit for sharks applies to any person who fishes in any manner, except to persons aboard a vessel that has been issued an Atlantic incidental or directed shark LAP under § 635.4. If a commercial Atlantic shark quota is closed under § 635.28, the recreational retention limit for sharks and no sale provision in paragraph (a) of this section may be applied to persons aboard a vessel issued an Atlantic incidental or directed shark LAP under § 635.4, only if that vessel has also been issued an HMS Charter/Headboat permit issued under § 635.4 and is engaged in a for-hire fishing trip.

* * * * *

■ 10. In § 635.24, paragraph (a) is revised to read as follows:

§ 635.24 Commercial retention limits for sharks and swordfish.

* * * * *

(a) *Sharks.* (1) A person who owns or operates a vessel that has been issued a valid shark research permit under § 635.32(f) and who has a NMFS-approved observer on board may retain, possess, or land LCS, including sandbar sharks, in excess of the retention limits in paragraphs (a)(2) through (6) of this section. The amount of LCS that can be landed by such a person will vary as specified on the shark research permit. Only a person who owns or operates a vessel issued a valid shark research permit with a NMFS-approved observer on board may retain, possess, or land sandbar sharks.

(2) From July 24, 2008 through December 31, 2012, a person who owns or operates a vessel that has been issued a directed LAP for sharks and does not have a valid shark research permit, or a person who owns or operates a vessel that has been issued a directed LAP for sharks and that has been issued a valid shark research permit but does not have a NMFS-approved observer on board, may retain, possess, or land no more than 33 non-sandbar LCS per vessel per trip if the fishery is open per § 635.27 and § 635.28. Such persons may not retain, possess, or land sandbar sharks. As of January 1, 2013, a person who owns or operates a vessel that has been issued a directed LAP for sharks and does not have a valid shark research permit, or a person who owns or operates a vessel that has been issued a directed LAP for sharks and that has been issued a shark research permit but does not have a NMFS-approved observer on board, may retain, possess, or land no more than 36 non-sandbar LCS per vessel per trip if the fishery is open per § 635.27 and § 635.28. Such persons may not retain, possess, or land sandbar sharks.

(3) A person who owns or operates a vessel that has been issued an incidental LAP for sharks and does not have a valid shark research permit, or a person who owns or operates a vessel that has been issued an incidental LAP for sharks and that has been issued a valid shark research permit but does not have a NMFS-approved observer on board, may retain, possess, or land no more than 3 non-sandbar LCS per vessel per trip if the fishery is open per § 635.27 and § 635.28. Such persons may not retain, possess, or land sandbar sharks.

(4) A person who owns or operates a vessel that has been issued a directed shark LAP may retain, possess, or land SCS and pelagic sharks if the SCS or pelagic shark fishery is open per § 635.27 and § 635.28. A person who owns or operates a vessel that has been issued an incidental LAP for sharks may retain, possess, or land no more than 16 SCS and pelagic sharks, combined, per trip, if the fishery is open per § 635.27 and § 635.28.

(5) A person who owns or operates a vessel that has been issued an incidental or directed LAP for sharks may not retain, possess, land, sell, or purchase prohibited sharks, including any parts or pieces of prohibited sharks, which are listed in Table 1 of Appendix A to this part under prohibited sharks.

(6) A person who owns or operates a vessel that has been issued either an incidental or directed LAP for sharks, and who decides to retain sharks, must retain, subject to the trip limits, all dead, legal-sized, non-prohibited sharks that are brought onboard the vessel and cannot replace those sharks with sharks of higher quality or size that are caught later in the trip. Any fish that are to be released cannot be brought onboard the vessel and must be released in the water in a manner that maximizes survival.

* * * * *

■ 11. In § 635.27, paragraphs (b)(1) and (2) are revised to read as follows:

§ 635.27 Quotas.

* * * * *

(b) * * *

(1) *Commercial quotas.* The commercial quotas for sharks specified in paragraphs (b)(1)(i) through (b)(1)(vi) of this section apply to all sharks harvested from the management unit, regardless of where harvested. Sharks taken and landed from state waters, even by fishermen without Federal shark permits, must be counted against the fishery quota. Commercial quotas are specified for each of the management groups of sandbar sharks, non-sandbar LCS, SCS, blue sharks, porbeagle sharks, and pelagic sharks other than blue or porbeagle sharks. Any sharks landed as unclassified will be counted against the appropriate species' quota based on the species composition calculated from data collected by observers on non-research trips and/or dealer data. No prohibited sharks, including parts or pieces of prohibited sharks, which are listed under heading D of Table 1 of Appendix A to this part, may be retained except as authorized under § 635.32.

(i) *Fishing seasons.* The fishing season for sandbar sharks, non-sandbar LCS, small coastal sharks, and all pelagic sharks will begin on January 1 and end on December 31.

(ii) *Regions.* (A) The commercial quotas for non-sandbar LCS are split between two regions: the Gulf of Mexico and the Atlantic. For the purposes of this section, the boundary between the Gulf of Mexico region and the Atlantic region is defined as a line beginning on the east coast of Florida at the mainland at 25°20.4′ N. lat, proceeding due east. Any water and land to the south and west of that boundary is considered, for the purposes of quota monitoring and setting of quotas, to be within the Gulf of Mexico region. Any water and land to the north and east of that boundary, for the purposes of quota monitoring and setting of quotas, is considered to be within the Atlantic region.

(B) Except for non-sandbar LCS landed by a vessels issued a valid shark research permit with a NMFS-approved observer onboard, any non-sandbar LCS reported by dealers located in the Florida Keys areas or in the Gulf of Mexico will be counted against the non-sandbar LCS Gulf of Mexico regional quota. Except for non-sandbar LCS landed by a vessels issued a valid shark research permit with a NMFS-approved observer onboard, any non-sandbar LCS reported by dealers located in the Atlantic region will be counted against the non-sandbar LCS Atlantic regional quota. Non-sandbar LCS landed by a vessel issued a valid shark research permit with a NMFS-approved observer onboard will be counted against the non-sandbar LCS research fishery quota using scientific observer reports.

(iii) *Sandbar sharks.* The base annual commercial quota for sandbar sharks is 116.6 mt dw. However, from July 24,

2008 through December 31, 2012, to account for overharvests that occurred in 2007, the adjusted base quota is 87.9 mt dw. Both the base quota and the adjusted base quota may be further adjusted per paragraph (b)(1)(vii) of this section. This quota is available only to the owners of commercial shark vessels that have been issued a valid shark research permit and that have a NMFS-approved observer onboard.

(iv) *Non-sandbar LCS.* The total base quota for non-sandbar LCS is 677.8 mt dw. This base quota is split between the two regions and the shark research fishery as follows: Gulf of Mexico = 439.5 mt dw; Atlantic = 188.3 mt dw; and Shark Research Fishery = 50 mt dw. However, from July 24, 2008 through December 31, 2012, to account for overharvests that occurred in 2007, the total adjusted base quota is 615.8 mt dw. This adjusted base quota is split between the regions and the shark research fishery as follows: Gulf of Mexico = 390.5 mt dw; Atlantic = 187.8 mt dw; and Shark Research Fishery = 37.5 mt dw. Both the base quota and the adjusted base quota may be further adjusted per paragraph (b)(1)(vii) of this section.

(v) *Small coastal sharks.* The base annual commercial quota for small coastal sharks is 454 mt dw, unless adjusted pursuant to paragraph (b)(1)(vii) of this section.

(vi) *Pelagic sharks.* The base annual commercial quotas for pelagic sharks are 273 mt dw for blue sharks, 1.7 mt dw for porbeagle sharks, and 488 mt dw for pelagic sharks other than blue sharks or porbeagle sharks, unless adjusted pursuant to paragraph (b)(1)(vii) of this section.

(vii) *Annual adjustments.* NMFS will publish in the **Federal Register** any annual adjustments to the base annual commercial quotas or the 2008 through 2012 adjusted base quotas. The base annual quota and the adjusted base annual quota will not be available, and the fishery will not open, until such adjustments are published and effective in the **Federal Register**.

(A) *Overharvests.* If the available quota for sandbar sharks, small coastal, porbeagle shark, and pelagic sharks other than blue or porbeagle sharks is exceeded in any fishing season, NMFS will deduct an amount equivalent to the overharvest(s) from the following fishing season or, depending on the level of overharvest(s), NMFS may deduct an amount equivalent to the overharvest(s) spread over a number of subsequent fishing seasons to a maximum of five years. If the annual quota in a particular region or in the research fishery for non-sandbar LCS is exceeded in any fishing season, NMFS will deduct an amount equivalent to the overharvest(s) from the following fishing season or, depending on the level of overharvest(s), NMFS may deduct an amount equivalent to the overharvest(s) spread over a number of subsequent fishing seasons to a maximum of five years, in the specific region or research fishery where the overharvest occurred. If the blue shark quota is exceeded, NMFS will reduce the annual commercial quota for pelagic sharks by the amount that the blue shark quota is exceeded prior to the start of the next fishing season or, depending on the level of overharvest(s), deduct an amount equivalent to the overharvest(s) spread over a number of subsequent fishing seasons to a maximum of five years.

(B) *Underharvests.* If an annual quota for sandbar sharks, SCS, blue sharks, porbeagle sharks, or pelagic sharks other than blue or porbeagle is not exceeded, NMFS may adjust the annual quota depending on the status of the stock or quota group. If the annual quota for non-sandbar LCS is not exceeded in either region or in the research fishery, NMFS may adjust the annual quota for that region or the research fishery depending on the status of the stock or quota group. If the stock (e.g., sandbar shark, porbeagle shark, pelagic shark, or blue shark) or specific species within a quota group (e.g., non-sandbar LCS or SCS) is declared to be overfished, to have overfishing occurring, or to have an unknown status, NMFS will not adjust the following fishing year's quota for any underharvest, and the following fishing year's quota will be equal to the base annual quota (or the adjusted base quota for sandbar and non-sandbar LCS until December 31, 2012). If the stock is not declared to be overfished, to have overfishing occurring, or to have an unknown status, NMFS may increase the following year's base annual quota (or the adjusted base quota for sandbar and non-sandbar LCS until December 31, 2012) by an equivalent amount of the underharvest up to 50 percent above the base annual quota. For the non-sandbar LCS fishery, underharvests are not transferable between regions and/or the research fishery.

(2) *Public display and non-specific research quota.* The base annual quota for persons who collect non-sandbar LCS, SCS, pelagic sharks, blue sharks, porbeagle sharks, or prohibited species under a display permit or EFP is 57.2 mt ww (41.2 mt dw). The base annual quota for persons who collect sandbar sharks under a display permit is 1.4 mt ww (1 mt dw) and under an EFP is 1.4 mt ww (1 mt dw). No persons may collect dusky sharks under a display permit or EFP. All sharks collected under the authority of a display permit or EFP, subject to restrictions at § 635.32, will be counted against these quotas.

* * * * *

■ 12. In § 635.28, paragraphs (b)(1) through (3) are revised to read as follows:

§ 635.28 Closures.

* * * * *

(b) * * *

(1) If quota is available as specified by a publication in the **Federal Register**, the commercial fisheries for sandbar shark, non-sandbar LCS, SCS, porbeagle sharks, blue sharks, and pelagic sharks other than blue or porbeagle sharks will remain open as specified at § 635.27(b)(1).

(2) When NMFS calculates that the fishing season landings for sandbar shark, non-sandbar LCS, SCS, blue sharks, porbeagle sharks, or pelagic sharks other than blue or porbeagle sharks has reached or is projected to reach 80 percent of the available quota as specified in § 635.27(b)(1), NMFS will file for publication with the Office of the Federal Register a notice of closure for that shark species group and/or region that will be effective no fewer than 5 days from date of filing. From the effective date and time of the closure until NMFS announces, via a notice in the **Federal Register**, that additional quota is available and the season is reopened, the fishery for the shark species group and, for non-sandbar LCS, region is closed, even across fishing years.

(3) When the fishery for a shark species group and/or region is closed, a fishing vessel, issued an Atlantic Shark LAP pursuant to § 635.4, may not possess or sell a shark of that species group and/or region, except under the conditions specified in § 635.22(a) and (c) or if the vessel possesses a valid shark research permit under § 635.32 and an NMFS-approved observer is onboard. A shark dealer, issued a permit pursuant to § 635.4, may not purchase or receive a shark of that species group and/or region from a vessel issued an Atlantic Shark LAP, except that a permitted shark dealer or processor may possess sharks that were harvested, off-loaded, and sold, traded, or bartered, prior to the effective date of the closure and were held in storage. Additionally, a permitted shark dealer or processor may possess non-sandbar sharks that were harvested by a vessel issued a valid shark research permit with a NMFS-approved observer onboard as long as the non-sandbar shark research

fishery is open. Under a closure for a shark species group, a shark dealer, issued a permit pursuant to § 635.4 may, in accordance with state regulations, purchase or receive a shark of that species group if the sharks were harvested, off-loaded, and sold, traded, or bartered from a vessel that fishes only in state waters and that has not been issued a Shark LAP, HMS Angling permit, or HMS Charter/Headboat permit pursuant to § 635.4. Additionally, under a closure for a shark species group and/or regional closure, a shark dealer, issued a permit pursuant, to § 635.4 may purchase or receive a shark of that species group if the sharks were harvested, off-loaded, and sold, traded, or bartered from a vessel issued a valid shark research permit (per § 635.32) that had a NMFS-approved observer on board during the trip sharks were collected.

* * * * *

■ 13. In § 635.30, paragraphs (c)(1) through (4) are revised to read as follows:

§ 635.30 Possession at sea and landing.

* * * * *

(c) * * *

(1) Notwithstanding the regulations issued at part 600, subpart N of this chapter, a person who owns or operates a vessel issued a Federal Atlantic commercial shark LAP must maintain all the shark fins including the tail on the shark carcass until the shark has been offloaded from the vessel. While sharks are on board and when sharks are being offloaded, persons issued a Federal Atlantic commercial shark LAP are subject to the regulations at part 600, subpart N, of this chapter.

(2) A person who owns or operates a vessel that has a valid Federal Atlantic commercial shark LAP must maintain the shark intact through offloading except that the shark may be dressed. All fins, including the tail, must remain naturally attached to the shark through offloading. While on the vessel, fins may be sliced so that the fin can be folded along the carcass for storage purposes as long as the fin remains naturally attached to the carcass via at least a small portion of uncut skin. The fins and tail may only be removed from the carcass once the shark has been landed and offloaded.

(3) A person who owns or operates a vessel that has been issued a Federal Atlantic commercial shark LAP and who lands sharks in an Atlantic coastal port must have all fins and carcasses weighed and recorded on the weighout slips specified in § 635.5(a)(2) and in accordance with regulations at part 600, subpart N, of this chapter. Persons may not possess any shark fins not naturally attached to a shark carcass on board a fishing vessel at any time.

(4) Persons aboard a vessel that does not have a commercial permit for shark must maintain a shark in or from the EEZ intact through landing with the head, tail, and all fins attached. The shark may be bled.

* * * * *

■ 14. In § 635.31, paragraphs (c)(1) and (c)(4) are revised to read as follows:

§ 635.31 Restrictions on sale and purchase.

* * * * *

(c) * * *

(1) Persons that own or operate a vessel that possesses a shark from the management unit may sell such shark only if the vessel has a valid commercial shark permit issued under this part. Persons may possess and sell a shark only when the fishery for that species group and/or region has not been closed, as specified in § 635.28(b).

* * * * *

(4) Only dealers that have a valid shark dealer permit may purchase shark from the owner or operator of a fishing vessel. Dealers may purchase a shark only from an owner or operator of a vessel who has a valid commercial shark permit issued under this part, except that dealers may purchase a shark from an owner or operator of a vessel that does not have a commercial permit for shark if that vessel fishes exclusively in state waters. Dealers may purchase a sandbar shark only from an owner or operator of a vessel who has a valid shark research permit and who had a NMFS-approved observer onboard the vessel for the trip in which the sandbar shark was collected. Dealers may purchase a shark from an owner or operator of fishing vessel that has a permit issued under this part only when the fishery for that species group and/or region has not been closed, as specified in § 635.28(b).

* * * * *

■ 15. In § 635.32, paragraphs (a)(2), (f), and (g) are revised and paragraph (h) is added to read as follows:

§ 635.32 Specifically authorized activities.

(a) * * *

(2) Activities subject to the provisions of this section include, but are not limited to: scientific research resulting in, or likely to result in, the take, harvest, or incidental mortality of Atlantic HMS; exempted fishing and educational activities; programs under which regulated species retained in contravention to otherwise applicable regulations may be donated through approved food bank networks; or chartering arrangements. Such activities must be authorized in writing and are subject to all conditions specified in any letter of acknowledgment, EFP, scientific research permit, display permit, chartering permit, or shark research permit issued in response to requests for authorization under this section.

* * * * *

(f) *Shark research permits.* (1) For activities consistent with the purposes of this section and § 600.745(b)(1) of this chapter, NMFS may issue shark research permits.

(2) Notwithstanding the provisions of § 600.745 of this chapter and other provisions of this part, a valid shark research permit is required to fish for, take, retain, or possess Atlantic sharks, including sandbar sharks, in excess of the retention limits described in § 635.24(a). A valid shark research permit must be on board the harvesting vessel, must be available for inspection when the shark is landed, and must be presented for inspection upon request of an authorized officer. A shark research permit is only valid for the vessel and owner(s) combination specified and cannot be transferred to another vessel or owner(s). A shark research permit is only valid for the retention limits, time, area, gear specified, and other terms and conditions as listed on the permit and only when a NMFS-approved observer is onboard. Species landed under a shark research permit shall be counted against the appropriate quota specified in § 635.27 or as otherwise provided in the shark research permit.

(3) Regardless of the number of applicants, NMFS will issue only a limited number of shark research permits depending on available quotas as described in § 635.27, research needs for stock assessments and other scientific purposes, and the number of sharks expected to be harvested by vessels issued LAPs for sharks.

(4) In addition to the workshops required under § 635.8, persons issued a shark research permit, and/or operators of vessels specified on the shark research permit, may be required to attend other workshops (e.g., shark identification workshops, captain's meeting, etc.) as deemed necessary by NMFS to ensure the collection of high quality data.

(5) Issuance of a shark research permit does not guarantee the permit holder that a NMFS-approved observer will be deployed on any particular trip. Rather, permit issuance indicates that a vessel is eligible for a NMFS-approved

observer to be deployed on the vessel for a particular trip and that, on such observed trips, the vessel may be allowed to harvest Atlantic sharks, including sandbar sharks, in excess of the retention limits described in § 635.24(a).

(6) The shark research permit may be revoked, limited, or modified at any time, does not confer any right to engage in activities beyond those authorized by the permit, and does not confer any right of compensation to the holder.

(g) *Applications and renewals.* (1) Application procedures shall be as indicated under § 600.745(b)(2) of this chapter, except that NMFS may consolidate requests for the purpose of obtaining public comment. In such cases, NMFS may file with the Office of the Federal Register, on an annual or more frequent basis as necessary, notification of previously authorized exempted fishing, scientific research, public display, chartering, and shark research activities and to solicit public comment on anticipated EFP, scientific research permit, letter of acknowledgment, public display, chartering, or shark research permit activities. Applications for EFPs, scientific research permits, public display permits, chartering permits, or shark research permits are required to include all reports specified in the applicant's previous permit including, if applicable, the year-end report, all delinquent reports for permits issued in prior years, and all other specified information. In situations of delinquent reports, applications will be deemed incomplete and a permit will not be issued under this section.

(2) For the shark research permit, NMFS will publish annually, in a **Federal Register** notice(s), a description for the following fishing year of the expected research objectives. This description may include information such as the number of vessels needed, regions and seasons for which vessels are needed, the specific criteria for selection, and the application deadline. Complete applications, including all information requested in the applicable **Federal Register** notice(s) and on the application form and any previous reports required pursuant to this section and § 635.5, must be received by NMFS by the application deadline in order for the vessel to be considered. Requested information could include, but is not limited to, applicant name and address, permit information, vessel information, availability of the vessel, past involvement in the shark fishery, and compliance with HMS regulations including observer regulations. NMFS will only review complete applications received by the published deadline to determine eligibility for participation in the shark research fishery. Qualified vessels will be chosen based on the information provided on the applications and their ability to meet the selection criteria as published in the **Federal Register** notice. A commercial shark permit holder whose vessel was selected to carry an observer in the previous two years for any HMS fishery but failed to comply with the observer regulations specified in § 635.7 will not be considered. A commercial shark permit holder that has been charged criminally or civilly (i.e., issued a Notice of Violation and Assessment (NOVA) or Notice of Permit Sanction) for any HMS related violation will not be considered for participation in the shark research fishery. Qualified vessels will be randomly selected to participate in the shark research fishery based on their availability and the temporal and spatial needs of the research objectives. If a vessel issued a shark research permit cannot conduct the shark research tasks, for whatever reason, that permit will be revoked and, depending on the status of the research and the fishing year, NMFS will randomly select another qualified vessel to be issued a shark research permit.

(h) *Terms and conditions.* (1) For EFPs, scientific research permits, and public display permits: Written reports on fishing activities, and disposition of all fish captured under a permit issued under this section must be submitted to NMFS within 5 days of return to port. NMFS will provide specific conditions and requirements as needed, consistent with the Consolidated HMS Fishery Management Plan, in the permit. If an individual issued a Federal permit under this section captures no HMS in any given month, either in or outside the EEZ, a ''no-catch'' report must be submitted to NMFS within 5 days of the last day of that month.

(2) For chartering permits, written reports of fishing activities must be submitted to NMFS by a date specified, and to an address designated, in the terms and conditions of each chartering permit.

(3) An annual written summary report of all fishing activities, and disposition of all fish captured, under the permit must be submitted to NMFS for all EFPs, scientific research permits, display permits, and chartering permits issued under this section within 30 days after the expiration date of the permit.

(4) For shark research permits, all owners and/or operators must comply with the recordkeeping and reporting requirements specified in § 635.5 per the requirement of holding a LAP for sharks.

(5) As stated in § 635.4(a)(6), failure to comply with the recordkeeping and reporting requirements of this section could result in the EFP, scientific research permit, display permit, chartering permit, or shark research permit being revoked, suspended, or modified, and in the denial of any future applications.

■ 16. In § 635.69, paragraph (a) introductory text is revised to read as follows:

§ 635.69 Vessel monitoring systems.

(a) *Applicability.* To facilitate enforcement of time/area and fishery closures, an owner or operator of a commercial vessel, permitted to fish for Atlantic HMS under § 635.4 and that fishes with a pelagic or bottom longline or gillnet gear, is required to install a NMFS-approved vessel monitoring system (VMS) unit on board the vessel and operate the VMS unit under the following circumstances:

* * * * *

■ 17. In § 635.71, paragraphs (a)(2), (a)(4), (a)(6), (d)(3), (d)(4), (d)(6) through (8), and (d)(10) are revised and paragraphs (d)(15), (d)(16), and (d)(17) are added to read as follows:

§ 635.71 Prohibitions.

* * * * *

(a) * * *

(2) Fish for, catch, possess, retain, or land Atlantic HMS without the appropriate valid vessel permit, LAP, EFP, scientific research permit, display permit, chartering permit, or shark research permit on board the vessel, as specified in §§ 635.4 and 635.32.

* * * * *

(4) Sell or transfer or attempt to sell or transfer, for commercial purposes, an Atlantic tuna, shark, or swordfish other than to a dealer that has a valid dealer permit issued under § 635.4, except that this does not apply to a shark harvested by a vessel that has not been issued a permit under this part and that fishes exclusively within the waters under the jurisdiction of any state.

* * * * *

(6) Falsify or fail to record, report, or maintain information required to be recorded, reported, or maintained, as specified in §§ 635.5 and 635.32 or in the terms and conditions of a permit issued under § 635.4 or an EFP, scientific research permit, display permit, chartering permit, or shark research permit issued under § 635.32.

* * * * *

(d) * * *

(3) Retain, possess, or land a shark of a species group when the fishery for that species group and/or region is closed, as specified in § 635.28(b).

(4) Sell or purchase a shark of a species group when the fishery for that species group and/or region is closed, as specified in § 635.28(b).

* * * * *

(6) Fail to maintain a shark in its proper form, as specified in § 635.30(c). Fail to maintain naturally attached shark fins through offloading as specified in § 635.30(c).

(7) Sell or purchase shark fins that are disproportionate to the weight of shark carcasses, as specified in § 635.30(c) and § 600.1204(e) and (l) of this chapter.

(8) Fail to have shark fins and carcasses weighed and recorded, as specified in § 635.30(c).

* * * * *

(10) Retain, possess, sell, or purchase a prohibited shark, including parts or pieces of prohibited sharks, as specified under §§ 635.22(c), 635.24(a), and 635.27(b), or fail to disengage any hooked or entangled prohibited shark with the least harm possible to the animal as specified at § 635.21(d).

* * * * *

(15) Sell or transfer or attempt to sell or transfer a shark or sharks or part of a shark or sharks in excess of the retention limits specified in § 635.24(a).

(16) Purchase, receive, or transfer or attempt to purchase, receive, or transfer a shark or sharks or part of a shark or sharks landed in excess of the retention limits specified in § 635.24(a).

(17) Replace sharks that are onboard the vessel for retention with sharks of higher quality or size that are caught later in a particular trip as specified in § 635.24(a).

* * * * *

[FR Doc. E8–13961 Filed 6–23–08; 8:45 am]

Editorial Note: Federal Register rule document E8–13961, originally published at pages 35778 to 35833 in the issue of Tuesday, June 24, 2008, included several pages of duplicated text and deleted material. This document is being republished in its entirety.

[FR Doc. R8–13961 Filed 7–14–08; 8:45 am]

BILLING CODE 1505–01–D

Reader Aids

Federal Register

Vol. 73, No. 136

Tuesday, July 15, 2008

CUSTOMER SERVICE AND INFORMATION

Federal Register/Code of Federal Regulations	
General Information, indexes and other finding aids	**202–741–6000**
Laws	**741–6000**
Presidential Documents	
Executive orders and proclamations	**741–6000**
The United States Government Manual	**741–6000**
Other Services	
Electronic and on-line services (voice)	**741–6020**
Privacy Act Compilation	**741–6064**
Public Laws Update Service (numbers, dates, etc.)	**741–6043**
TTY for the deaf-and-hard-of-hearing	**741–6086**

ELECTRONIC RESEARCH

World Wide Web

Full text of the daily Federal Register, CFR and other publications is located at: **http://www.gpoaccess.gov/nara/index.html**

Federal Register information and research tools, including Public Inspection List, indexes, and links to GPO Access are located at: **http://www.archives.gov/federal__register**

E-mail

FEDREGTOC-L (Federal Register Table of Contents LISTSERV) is an open e-mail service that provides subscribers with a digital form of the Federal Register Table of Contents. The digital form of the Federal Register Table of Contents includes HTML and PDF links to the full text of each document.

To join or leave, go to **http://listserv.access.gpo.gov** and select *Online mailing list archives, FEDREGTOC-L, Join or leave the list (or change settings);* then follow the instructions.

PENS (Public Law Electronic Notification Service) is an e-mail service that notifies subscribers of recently enacted laws.

To subscribe, go to **http://listserv.gsa.gov/archives/publaws-l.html** and select *Join or leave the list (or change settings);* then follow the instructions.

FEDREGTOC-L and **PENS** are mailing lists only. We cannot respond to specific inquiries.

Reference questions. Send questions and comments about the Federal Register system to: **fedreg.info@nara.gov**

The Federal Register staff cannot interpret specific documents or regulations.

FEDERAL REGISTER PAGES AND DATE, JULY

37351–37774 1
37775–38108 2
38109–38306 3
38307–38882 7
38883–39212 8
39213–39568 9
39569–39856 10
39857–40166 11
40167–40452 14
40453–40714 15

CFR PARTS AFFECTED DURING JULY

At the end of each month, the Office of the Federal Register publishes separately a List of CFR Sections Affected (LSA), which lists parts and sections affected by documents published since the revision date of each title.

3 CFR

Proclamations:
8272 38297
(Proc. 7912 of 6/29/2005 See: Proc. 8272) 38297
(Proc. 8213 of 12/20/2007 See: Proc. 8272) 38297
(Proc. 8240 of 4/17/2008 See: Proc. 8272) 38297

Executive Orders:
13467 38103
EO 10450 of 4/27/1953 (see: EO 13467) 38103
EO 10577 of 11/23/1954 (see: EO 13467) 38103
EO 10865 of 2/20/1960 (see: EO 13467) 38103
EO 12171 of 11/19/1979 (Amended by: EO 13467) 38103
EO 12333 of 12/4/1981 (see: EO 13467) 38103
EO 12829 of 1/6/1993 (see: EO 13467) 38103
EO 12958 of 4/17/1995 (see: EO 13467) 38103
EO 12968 of 8/2/1995 (Amended by: EO 13467) 38103
EO 13381 of 6/27/2005 (Revoked by: EO 13467) 38103

Administrative Orders:
Memorandums:
Memorandum of June 26, 2008 37351

5 CFR

532 39213

7 CFR

301 37775
989 38307
1216 39214

Proposed Rules:
205 .....40194, 40197
253 38155

9 CFR

Proposed Rules:
71 38343
94 37892

10 CFR

Proposed Rules:
430 38159

12 CFR

575 39216
1750 40658

14 CFR

39 .....37353, 37355, 37358, 37775, 37778, 37781, 37783, 37786, 37789, 37791, 37793, 37795, 38311, 38883, 38885, 38887, 38889, 38891, 38893, 38895, 38898, 38900, 38905, 39569, 39570, 39572, 39574, 39577, 39579, 39580, 39583
71 .....37797, 38109, 38313, 38314, 39220, 39221
97 .....37360, 40167, 40169

Proposed Rules:
39 .....37898, 37900, 37903, 38160, 38346, 38933, 38935, 38937, 39627, 39628
71 37905

15 CFR

336 39585
745 38908
774 38908
902 39587

16 CFR

305 39221
306 40154

17 CFR

30 39226
200 40144
210 38094
228 38094
229 38094
241 40144
249 38094

Proposed Rules:
210 39526
229 .....39526, 40106
230 .....37752, 40106
239 40106
240 .....37752, 39182, 40088, 40106
242 .....40088, 40201
249 .....39526, 40088
270 40124
275 40124

18 CFR

37 39092

19 CFR

201 38316
210 38316

21 CFR

210 40453
312 39588
314 39588
530 38110

600 39588
601 39588
1310 39611
Proposed Rules:
1300 40451
1304 40451
1306 40451
1311 40451

22 CFR

Proposed Rules:
304 39270

25 CFR

11 39857
Proposed Rules:
293 37907

26 CFR

1 ....37362, 37797, 38113, 38910, 39227, 39614, 40171
20 40173
25 37362
26 37362
31 37371
53 37362
55 37362
156 37362
157 37362
301 ....37362, 37804, 38915
602 ....37371, 39227
Proposed Rules:
1 ....37389, 37910, 38162, 38940, 39270, 39630
26 37910
301 ....37910, 40471

27 CFR

Proposed Rules:
9 40474

28 CFR

0 40463
524 39863
545 39864
Proposed Rules:
32 39632

29 CFR

1615 39866
4003 38117
4022 40464
4044 40464
Proposed Rules:
4001 37390
4022 37390
4044 37390

30 CFR

938 38918
Proposed Rules:
250 39376
285 39376
290 39376
948 38941

31 CFR

Ch. V 37536

32 CFR

706 38921
Proposed Rules:
199 38348
726 38350

33 CFR

100 ....39233, 39235
110 ....38922, 38924
117 ....37806, 37809
165 ....37809, 37810, 37813, 37815, 37818, 37820, 37822, 37824, 37827, 37829, 37833, 37835, 38120, 39868
Proposed Rules:
165 38951

34 CFR

Proposed Rules:
674 37694
682 37694
685 37694

36 CFR

242 40179
Proposed Rules:
2 39272
7 38954
1195 ....38352, 38353

37 CFR

201 37838
202 37838
203 37838
204 37838
205 37838
211 37838
Proposed Rules:
1 38027
201 40203

38 CFR

3 40465
Proposed Rules:
21 37402

39 CFR

Proposed Rules:
111 ....39272, 39273

40 CFR

50 39235
51 39235
52 ....37840, 37841, 37843, 37844, 38122, 38124, 38328, 39237
53 39235
58 39235
62 38925
63 ....37728, 39871
81 38124
86 38293
174 37846
180 ....37850, 37852, 39240, 39247, 39251, 39256, 39261, 39264
261 37858
266 37858
300 40467
Proposed Rules:
52 ....38163, 38353, 39275, 39897, 39900, 39911, 40203, 40228
55 38356
59 40230
62 38954
271 40263

42 CFR

Proposed Rules:
405 38502
409 38502
410 38502
411 38502
414 38502
415 38502
424 38502
485 38502
486 38502

44 CFR

65 40180
67 38132
64 40468
Proposed Rules:
67 40266

47 CFR

1 ....37861, 37869
32 37882
36 37882
43 ....37861, 37869
54 37882
64 ....38928, 40183
73 ....38138, 38139, 38331, 39269, 39623, 40186
Proposed Rules:
1 37911
27 ....38955, 40271
43 37911
73 ....38361, 40272, 40273
74 40271
78 40271
90 40274
101 40271

48 CFR

Proposed Rules:
516 39275
552 39275

49 CFR

262 39875
571 38331
594 39890
Proposed Rules:
171 38361
173 ....38164, 38361
177 38164
178 38361
523 37922
531 37922
533 37922
534 37922
536 37922
537 37922
541 40276
571 38372

50 CFR

17 ....39506, 39790
100 40179
600 40658
622 38139
635 ....38144, 40658
648 ....37382, 38340, 39587, 39624, 40186
679 ....38931, 39626, 40193
Proposed Rules:
17 ....38956, 39639
27 39272
216 39915
300 39915
404 38375
622 38387
648 39643
660 ....39625, 39930

REMINDERS

The items in this list were editorially compiled as an aid to Federal Register users. Inclusion or exclusion from this list has no legal significance.

RULES GOING INTO EFFECT JULY 15, 2008

AGRICULTURE DEPARTMENT

Agricultural Marketing Service

Livestock Mandatory Reporting:

Reestablishment and Revision of the Reporting Regulation for Swine, Cattle, Lamb, and Boxed Beef; published 5-16-08

ENVIRONMENTAL PROTECTION AGENCY

Deletion Withdrawal:

National Oil and Hazardous Substance Pollution Contingency Plan; National Priorities List; published 7-15-08

Implementation of the New Source Review (NSR) Program for Particulate Matter Less Than 2.5 Micrometers (PM2.5); published 5-16-08

National Oil and Hazardous Substance Pollution Contingency Plan; National Priorities List; published 7-15-08

National Perchloroethylene Air Emission Standards for Dry Cleaning Facilities; published 4-1-08

FEDERAL COMMUNICATIONS COMMISSION

Promoting Diversification of Ownership in the Broadcasting Services; published 5-16-08

JUSTICE DEPARTMENT

Drug Enforcement Administration

Redelegation of Functions; published 7-15-08

TRANSPORTATION DEPARTMENT

Federal Aviation Administration

Airworthiness Directives:

Short Brothers Model SD3-60 Airplanes Equipped with Auxiliary Fuel Tank System in Accordance with Supplemental Type Certificate SA00404AT; published 6-10-08

VETERANS AFFAIRS DEPARTMENT

Eligibility Reporting Requirements; published 7-15-08

COMMENTS DUE NEXT WEEK

AGRICULTURE DEPARTMENT

Animal and Plant Health Inspection Service

Risk Analysis Evaluating the Foot-and-Mouth Disease Status of Surrey County, England; comments due by 7-22-08; published 5-23-08 [FR E8-11659]

AGRICULTURE DEPARTMENT

Natural Resources Conservation Service

Regulations for Complying with the National Environmental Policy Act; comments due by 7-25-08; published 6-25-08 [FR E8-14122]

COMMERCE DEPARTMENT

National Oceanic and Atmospheric Administration

Application for Exempted Fishing Permits:

General Provisions for Domestic Fisheries; comments due by 7-23-08; published 7-8-08 [FR E8-15375]

Fisheries in the Western Pacific:

Precious Corals Fisheries; Black Coral Quota and Gold Coral Moratorium; comments due by 7-22-08; published 5-23-08 [FR E8-11536]

Fisheries of the Exclusive Economic Zone Off Alaska:

Bering Sea and Aleutian Islands Crab Rationalization Program; comments due by 7-21-08; published 6-20-08 [FR E8-14012]

Taking and Importing Mammals:

U.S. Navy Training in the Hawaii Range Complex; comments due by 7-23-08; published 6-23-08 [FR 08-01371]

ENERGY DEPARTMENT

Federal Energy Regulatory Commission

Ex Parte Contacts and Separation of Functions; comments due by 7-21-08; published 5-21-08 [FR E8-11326]

ENVIRONMENTAL PROTECTION AGENCY

Approval and Promulgation of Implementation Plans: State of Missouri; comments due by 7-21-08; published 6-20-08 [FR E8-13838]

Approval and Promulgation of Implementation Plans; State of Missouri; comments due by 7-21-08; published 6-20-08 [FR E8-13755]

Environmental Statements; Notice of Intent:

Coastal Nonpoint Pollution Control Programs; States and Territories—

Florida and South Carolina; Open for comments until further notice; published 2-11-08 [FR 08-00596]

Exhaust Emission Standards for 2012 and Later Model Year Snowmobiles; comments due by 7-25-08; published 6-25-08 [FR E8-14411]

National Ambient Air Quality Standards for Lead; comments due by 7-21-08; published 5-20-08 [FR E8-10808]

Proposed Tolerance Actions:

Benfluralin, Carbaryl, Diazinon, etc.; comments due by 7-21-08; published 5-21-08 [FR E8-11420]

FEDERAL COMMUNICATIONS COMMISSION

Service Rules for Advanced Wireless Services in 1915-1920 MHz Bands; comments due by 7-25-08; published 7-14-08 [FR E8-16032]

FEDERAL DEPOSIT INSURANCE CORPORATION

Agency Information Collection Activities; Proposals, Submissions, and Approvals; comments due by 7-21-08; published 6-19-08 [FR E8-13849]

Financial Education Programs that Include the Provision of Bank Products and Services; comments due by 7-23-08; published 6-23-08 [FR E8-14076]

HEALTH AND HUMAN SERVICES DEPARTMENT

Centers for Medicare & Medicaid Services

Medicare Program:

Changes for Long-Term Care Hospitals Required by Certain Provisions of the Medicare, Medicaid, SCHIP Extension Act of 2007:

3-Year Moratorium on the Establishment of New Long-Term Care Hospitals and Long-Term Care Hospital Satellite Facilities etc.; comments due by 7-21-08; published 5-22-08 [FR 08-01285]

HEALTH AND HUMAN SERVICES DEPARTMENT

State Long-Term Care Partnership Program: Reporting Requirements for Insurers; comments due by 7-22-08; published 5-23-08 [FR E8-11559]

HOMELAND SECURITY DEPARTMENT

Coast Guard

Implementation of Vessel Security Officer Training Certification Requirements:

International Convention on Standards of Training, Certification and Watchkeeping; comments due by 7-21-08; published 5-20-08 [FR E8-11225]

HOMELAND SECURITY DEPARTMENT

Privacy Act; Systems of Records; comments due by 7-21-08; published 6-10-08 [FR E8-12785]

HOUSING AND URBAN DEVELOPMENT DEPARTMENT

Revisions to the Hospital Mortgage Insurance Program:

Technical and Clarifying Amendments; comments due by 7-25-08; published 6-25-08 [FR E8-14131]

INTERIOR DEPARTMENT

Surface Mining Reclamation and Enforcement Office

Utah Regulatory Program; comments due by 7-24-08; published 6-24-08 [FR E8-14267]

POSTAL SERVICE

Waiver of Signature Delivery Process; comments due by 7-24-08; published 7-9-08 [FR E8-15212]

TRANSPORTATION DEPARTMENT

Federal Aviation Administration

Airworthiness Directives:

Airbus Model A318, A319, A320, and A321 Series Airplanes; comments due by 7-24-08; published 6-24-08 [FR E8-14184]

Airbus Model A330-200, A330-300, and A340 300 Series Airplanes; comments due by 7-24-08; published 6-24-08 [FR E8-14186]

Airbus Model A330 and A340 Airplanes; comments due by 7-21-

08; published 6-26-08 [FR E8-14480]
BAE Systems (Operations) Limited (Jetstream) Model 4101 Airplanes; comments due by 7-21-08; published 6-20-08 [FR E8-13919]
Boeing Model 737-600, -700, -700C, -800, -900, and -900ER Series Airplanes; comments due by 7-21-08; published 6-6-08 [FR E8-12685]
Boeing Model 737 300, -400, and -500 Series Airplanes; comments due by 7-21-08; published 6-6-08 [FR E8-12752]
Boeing Model 737 600, 700, 800, and 900 Series Airplanes; comments due by 7-24-08; published 6-9-08 [FR E8-12829]
Boeing Model 747-100, 747-100B, 747-200B, 747-200C, 747 200F, 747-300, 747SR, and 747SP Series Airplanes; comments due by 7-21-08; published 5-20-08 [FR E8-11330]
Boeing Model 747-400, -400D, and -400F Series Airplanes; comments due by 7-21-08; published 6-6-08 [FR E8-12725]
Boeing Model 747 100, 747 100B, 747 100B SUD, 747 200B, 747 200C, etc. Series Airplanes; comments due by 7-21-08; published 6-6-08 [FR E8-12692]
Boeing Model 747 Airplanes; comments due by 7-21-08; published 6-6-08 [FR E8-12712]
Boeing Model 757 Airplanes; comments due by 7-21-08; published 6-6-08 [FR E8-12749]
Boeing Model 767 Airplanes; comments due by 7-21-08; published 6-6-08 [FR E8-12684]
Boeing Model 777 Airplanes; comments due by 7-21-08; published 6-6-08 [FR E8-12691]
Bombardier Model CL 600 2B19 (Regional Jet Series 100 & 440) Airplanes; comments due by 7-21-08; published 6-20-08 [FR E8-13922]
Bombardier Model DHC 8 400 Series Airplanes; comments due by 7-21-08; published 6-26-08 [FR E8-14482]
Dassault Model Falcon 7X Airplanes; comments due by 7-21-08; published 6-19-08 [FR E8-13712]
Diamond Aircraft Industries GmbH Model DA 42 Airplanes; comments due by 7-23-08; published 6-23-08 [FR E8-14078]
Empresa Brasileira de Aeronautica S.A. (EMBRAER) Model EMB 135 Airplanes, and Model EMB 145, 145ER, 145MR, 145LR, 145XR, 145MP, and 145EP Airplanes; comments due by 7-21-08; published 6-20-08 [FR E8-13923]
Empresa Brasileira de Aeronautica S.A. (EMBRAER) Model ERJ 170 and ERJ 190 Airplanes; comments due by 7-21-08; published 6-26-08 [FR E8-14476]
Empresa Brasileira de Aeronautica S.A. (EMBRAER) Model ERJ 190 Airplanes; comments due by 7-24-08; published 6-24-08 [FR E8-14187]
Pratt & Whitney Canada PW206A, PW206B, PW206B2, PW206C, PW206E, PW207C, PW207D, and PW207E Turboshaft Engines; comments due by 7-25-08; published 6-25-08 [FR E8-14320]
Turbomeca S.A. Models Arriel 1E2, 1S, and 1S1 Turboshaft Engines; comments due by 7-25-08; published 6-25-08 [FR E8-14321]
Congestion Management Rule for John F. Kennedy International Airport and Newark Liberty International Airport; comments due by 7-21-08; published 5-21-08 [FR 08-01271]
Petitions for Exemption; Summary of Petitions Received; comments due by 7-21-08; published 7-9-08 [FR E8-15481]

TRANSPORTATION DEPARTMENT

National Highway Traffic Safety Administration

Federal Motor Vehicle Safety Standards:
Side Impact Protection; comments due by 7-24-08; published 6-9-08 [FR E8-11273]
Petition for Approval of Alternate Odometer Disclosure Requirements; comments due by 7-24-08; published 6-24-08 [FR E8-13592]

TREASURY DEPARTMENT

Internal Revenue Service

Gross Estate; Election to Value on Alternate Valuation Date; comments due by 7-24-08; published 4-25-08 [FR E8-09025]

LIST OF PUBLIC LAWS

This is a continuing list of public bills from the current session of Congress which have become Federal laws. It may be used in conjunction with "P L U S" (Public Laws Update Service) on 202–741–6043. This list is also available online at *http://www.archives.gov/federal-register/laws.html*.

The text of laws is not published in the **Federal Register** but may be ordered in "slip law" (individual pamphlet) form from the Superintendent of Documents, U.S. Government Printing Office, Washington, DC 20402 (phone, 202–512–1808). The text will also be made available on the Internet from GPO Access at *http://www.gpoaccess.gov/plaws/index.html*. Some laws may not yet be available.

H.R. 6304/P.L. 110–261

Foreign Intelligence Surveillance Act of 1978 Amendments Act of 2008 (July 10, 2008; 122 Stat. 2436)

Last List July 2, 2008

Public Laws Electronic Notification Service (PENS)

PENS is a free electronic mail notification service of newly enacted public laws. To subscribe, go to *http://listserv.gsa.gov/archives/publaws-l.html*

Note: This service is strictly for E-mail notification of new laws. The text of laws is not available through this service. **PENS** cannot respond to specific inquiries sent to this address.