AUTHENTICATED
U.S. GOVERNMENT
INFORMATION
GPO

Federal Register

1–23–08 Wednesday
Vol. 73 No. 15 Jan. 23, 2008

Pages 3861–4050

The **FEDERAL REGISTER** (ISSN 0097–6326) is published daily, Monday through Friday, except official holidays, by the Office of the Federal Register, National Archives and Records Administration, Washington, DC 20408, under the Federal Register Act (44 U.S.C. Ch. 15) and the regulations of the Administrative Committee of the Federal Register (1 CFR Ch. I). The Superintendent of Documents, U.S. Government Printing Office, Washington, DC 20402 is the exclusive distributor of the official edition. Periodicals postage is paid at Washington, DC.

The **FEDERAL REGISTER** provides a uniform system for making available to the public regulations and legal notices issued by Federal agencies. These include Presidential proclamations and Executive Orders, Federal agency documents having general applicability and legal effect, documents required to be published by act of Congress, and other Federal agency documents of public interest.

Documents are on file for public inspection in the Office of the Federal Register the day before they are published, unless the issuing agency requests earlier filing. For a list of documents currently on file for public inspection, see *www.archives.gov.*

The seal of the National Archives and Records Administration authenticates the Federal Register as the official serial publication established under the Federal Register Act. Under 44 U.S.C. 1507, the contents of the **Federal Register** shall be judicially noticed.

The **Federal Register** is published in paper and on 24x microfiche. It is also available online at no charge as one of the databases on GPO Access, a service of the U.S. Government Printing Office.

The online edition of the **Federal Register** *www.gpoaccess.gov/nara,* available through GPO Access, is issued under the authority of the Administrative Committee of the Federal Register as the official legal equivalent of the paper and microfiche editions (44 U.S.C. 4101 and 1 CFR 5.10). It is updated by 6 a.m. each day the **Federal Register** is published and includes both text and graphics from Volume 59, Number 1 (January 2, 1994) forward.

For more information about GPO Access, contact the GPO Access User Support Team, call toll free 1-888-293-6498; DC area 202-512-1530; fax at 202-512-1262; or via e-mail at *gpoaccess@gpo.gov.* The Support Team is available between 7:00 a.m. and 9:00 p.m. Eastern Time, Monday–Friday, except official holidays.

The annual subscription price for the **Federal Register** paper edition is $749 plus postage, or $808, plus postage, for a combined **Federal Register, Federal Register** Index and List of CFR Sections Affected (LSA) subscription; the microfiche edition of the **Federal Register** including the **Federal Register** Index and LSA is $165, plus postage. Six month subscriptions are available for one-half the annual rate. The prevailing postal rates will be applied to orders according to the delivery method requested. The price of a single copy of the daily **Federal Register,** including postage, is based on the number of pages: $11 for an issue containing less than 200 pages; $22 for an issue containing 200 to 400 pages; and $33 for an issue containing more than 400 pages. Single issues of the microfiche edition may be purchased for $3 per copy, including postage. Remit check or money order, made payable to the Superintendent of Documents, or charge to your GPO Deposit Account, VISA, MasterCard, American Express, or Discover. Mail to: U.S. Government Printing Office—New Orders, P.O. Box 979050, St. Louis, MO 63197-9000; or call toll free 1-866-512-1800, DC area 202-512-1800; or go to the U.S. Government Online Bookstore site, see *bookstore.gpo.gov.*

There are no restrictions on the republication of material appearing in the **Federal Register.**

How To Cite This Publication: Use the volume number and the page number. Example: 73 FR 12345.

Postmaster: Send address changes to the Superintendent of Documents, Federal Register, U.S. Government Printing Office, Washington, DC 20402, along with the entire mailing label from the last issue received.

SUBSCRIPTIONS AND COPIES

PUBLIC

Subscriptions:

Paper or fiche	**202–512–1800**
Assistance with public subscriptions	**202–512–1806**

General online information **202–512–1530; 1–888–293–6498**

Single copies/back copies:

Paper or fiche	**202–512–1800**
Assistance with public single copies	**1–866–512–1800 (Toll-Free)**

FEDERAL AGENCIES

Subscriptions:

Paper or fiche	**202–741–6005**
Assistance with Federal agency subscriptions	**202–741–6005**

Printed on recycled paper.

Contents

Federal Register

Vol. 73, No. 15

Wednesday, January 23, 2008

Agriculture Department
See Commodity Credit Corporation
See Farm Service Agency
See Forest Service
See Natural Resources Conservation Service
NOTICES
Agency Information Collection Activities; Proposals, Submissions, and Approvals, 3921

Census Bureau
NOTICES
Request for Nominations to Serve on the Census Advisory Committee on the Hispanic Population, 3924

Centers for Disease Control and Prevention
RULES
Interstate Shipment of Etiologic Agents, 3874–3879
NOTICES
Agency Information Collection Activities; Proposals, Submissions, and Approvals, 3977–3978

Commerce Department
See Census Bureau
See International Trade Administration
See National Oceanic and Atmospheric Administration
NOTICES
Estimates of the Voting Age Population for 2007, 3923–3924

Commodity Credit Corporation
NOTICES
Agency Information Collection Activities; Proposals, Submissions, and Approvals, 3921–3922

Copyright Office, Library of Congress
PROPOSED RULES
Recordation of Notices of Termination of Transfers and Licenses:
Clarifications, 3898–3900

Drug Enforcement Administration
NOTICES
Medicine Shoppe–Jonesborough; Denial of Motion for Stay, 3997–3998

Employment and Training Administration
NOTICES
Availability of Funds and Solicitation for Grant Applications:
High Growth Job Training Initiative Grants for the Energy Industry, Construction and Skilled Trades, etc., 3998–4011

Energy Department
See Federal Energy Regulatory Commission
RULES
Workplace Substance Abuse Programs at DOE Sites, 3861–3863
NOTICES
229 Boundary Revision for the Oak Ridge Gaseous Diffusion Plant, 3950–3951
Reimbursement for Costs of Remedial Action at Active Uranium and Thorium Processing Sites, 3951

Environmental Protection Agency
PROPOSED RULES
Disapproval of Plan of Nevada; Clean Air Mercury Rule: Extension of Comment Period, 3900–3901
NOTICES
Agency Information Collection Activities; Proposals, Submissions, and Approvals, 3952–3958
Certain New Chemicals; Receipt and Status Information, 3958–3964
Filing of Pesticide Petitions for Residues of Pesticide Chemicals in or on Various Commodities, 3964–3967
National Lead Laboratory Accreditation Program: Notice of Availability of Revisions, 3967–3968
Project Performance Corporation; Transfer of Data, 3968–3969
Receipt of Application for Emergency Exemption: Chlorantraniliprole; Solicitation of Public Comment, 3969–3970

Farm Service Agency
NOTICES
Agency Information Collection Activities; Proposals, Submissions, and Approvals, 3921–3922

Federal Aviation Administration
RULES
Airworthiness Directives:
Boeing Model 777–200 and –300 Series Airplanes Equipped with Rolls-Royce RB211–TRENT 800 Series Engines, 3863–3867
PROPOSED RULES
Airworthiness Directives:
Bell Helicopter Textron Canada (BHTC) Models 206A, 206B, 206L, 206L–1, 206L–3, and 206L–4 Helicopters, 3887–3889
Bell Helicopter Textron Canada Model 222, 222B, 222U, 230 and 430 Helicopters, 3889–3891
Eurocopter Deutschland GMBH Model MBB–BK 117C–2 Helicopters, 3885–3887
Eurocopter France Model AS 355 N Helicopters, 3891–3893
Special Conditions:
Embraer S.A.; Model EMB–500; Brakes-Designation of Applicable Regulations, 3884–3885
Embraer S.A.; Model EMB–500; Static Pressure System, 3882–3884
Embraer S.A., Model EMB–500; High Fuel Temperature, 3881–3882
NOTICES
Approval of Finding of No Significant Impact and Record of Decision for Final Environmental Assessment:
Construction of a New Land-based Airport in Akutan, AK, 4040
Finding of No Significant Impact, 4040–4043
Intent to Rule on Change in Use of Aeronautical Property at Louisville International Airport, KY, 4043–4044
Meetings:
RTCA, Inc., 4044–4045

Federal Energy Regulatory Commission
NOTICES
Meetings; Sunshine Act, 3952

Federal Reserve System
NOTICES
Proposals to Engage in Permissible Nonbanking Activities or Acquire Companies Engaged in Permissible Nonbanking Activities, 3970–3971

Fish and Wildlife Service
NOTICES
Endangered and Threatened Wildlife and Plants:
Initiation of 5-Year Reviews of 10 Listed Species, 3991–3993
Environmental Impact Statement:
Sears Point Wetland and Watershed Restoration Project, 3993–3994

Foreign Assets Control Office
NOTICES
Additional Designations, Foreign Narcotics Kingpin Designation Act, 4045–4046

Forest Service
NOTICES
Resource Management Plans, etc.:
Bull Run Watershed Management Plan, 3922–3923

Health and Human Services Department
See Centers for Disease Control and Prevention
See National Institutes of Health
NOTICES
Annual Update of the HHS Poverty Guidelines, 3971–3972
Decision to Evaluate a Petition to Designate a Class of Employees at Spencer Chemical Co., Jayhawks Works, Pittsburg, Kansas, etc., 3972
Determination Concerning a Petition to Add a Class of Employees to the Special Exposure Cohort, 3972
Final Effect of Designation of a Class of Employees for Addition to the Special Exposure Cohort, 3973
Findings of Scientific Misconduct, 3973
Secretarial Recognition of Certain Healthcare Information Technology Standards Panel Interoperability Specifications as Interoperability Standards, etc., 3973–3977

Homeland Security Department
See U.S. Customs and Border Protection

Housing and Urban Development Department
RULES
Demolition or Disposition of Public Housing Projects; Correction, 3867–3868
NOTICES
Funding Availability for the Section 202 Demonstration Pre-Development Grant Program, 3985–3991

Interior Department
See Fish and Wildlife Service
See Land Management Bureau
See National Park Service
See Surface Mining Reclamation and Enforcement Office
NOTICES
Meetings:
Blackstone River Valley National Heritage Corridor Commission, 3991

Internal Revenue Service
RULES
Application of Section 338 to Insurance Companies, 3868–3874

International Trade Administration
NOTICES
Corrosion-Resistant Carbon Steel Flat Products from the Republic of Korea:
Notice of Preliminary Results of Antidumping Duty New Shipper Review, 3925–3928
Rescission of Antidumping Duty Administrative Review, 3943
Export Trade Certificate of Review, 3943–3945
Frozen Fish Fillets from the Socialist Republic of Vietnam:
Extension of Time Limit for Final Results of the Third Antidumping Duty Administrative Review, 3945
Steel Nails from People's Republic of China:
Preliminary Determination of Sales at Less Than Fair Value and Partial Affirmative Determination of Critical Circumstances, etc., 3928–3942
Steel Nails from the United Arab Emirates:
Notice of Preliminary Determination of Sales at Less Than Fair Value and Postponement of Final Determination, 3945–3950

International Trade Commission
NOTICES
Agency Information Collection Activities; Proposals, Submissions, and Approvals, 3997

Justice Department
See Drug Enforcement Administration

Labor Department
See Employment and Training Administration
See Labor Statistics Bureau
See Occupational Safety and Health Administration

Labor Statistics Bureau
NOTICES
Agency Information Collection Activities; Proposals, Submissions, and Approvals, 4011–4012

Land Management Bureau
NOTICES
Meetings:
Carrizo Plain National Monument Advisory Committee, 3994–3995

Library of Congress
See Copyright Office, Library of Congress

National Aeronautics and Space Administration
NOTICES
Meetings:
NASA Advisory Council, 4012
NASA Advisory Committee:
Renewal of NASA's International Space Station Advisory Committee Charter, 4013
National Environmental Policy Act; Constellation Program, 4013–4014
Notice of Intent to Grant an Exclusive License, 4014–4015

National Credit Union Administration
NOTICES
Meetings; Sunshine Act, 4015

National Highway Traffic Safety Administration
PROPOSED RULES
Federal Motor Vehicle Safety Standards, Child Restraint Systems:
Anthropomorphic Test Drive, 3901–3920

National Institutes of Health
NOTICES
Meetings:
Center for Scientific Review, 3978–3980
National Heart, Lung, and Blood Institute, 3980
National Institute on Drug Abuse, 3980–3981
National Library of Medicine, 3981

National Oceanic and Atmospheric Administration
RULES
Fisheries of the Exclusive Economic Zone Off Alaska:
Pacific Cod by Catcher Processors Using Pot Gear in the Bering Sea and Aleutian Islands Management Area, 3879
Pacific Cod by Catcher Vessels 60 Feet (18.3 Meters) Length Overall and Using Pot Gear in the Bering Sea and Aleutian Islands Management Areas, 3879–3880

National Park Service
NOTICES
Inventory Completion:
Florida Museum of Natural History, Gainesville, FL and Southwest Florida Water Management District, Brooksville, FL, 3995–3996
U.S. Department of Agriculture, Forest Service, Gila National Forest, NM and Southwest Museum of the American Indian, Autry National Center, CA, 3996–3997

Natural Resources Conservation Service
NOTICES
Proposed Changes to the Natural Resources Conservation Service's National Handbook of Conservation Practices, 3923

Nuclear Regulatory Commission
NOTICES
Confirmatory Order:
Southern California Edison Co., San Onofre Nuclear Generating Station, 4016–4019
Designation of Presiding Officer:
Pacific Gas and Electric Co., 4019
Meetings; Sunshine Act, 4019–4020

Occupational Safety and Health Administration
PROPOSED RULES
Confined Spaces in Construction, 3893–3894

Securities and Exchange Commission
NOTICES
Agency Information Collection Activities; Proposals, Submissions, and Approvals, 4020–4022
Meetings:
Improvements to Financial Reporting Advisory Committee, 4022–4023
Meetings; Sunshine Act, 4023
Northern Institutional Funds, et al.; Application, 4023–4027
Self-regulatory Organizations; Proposed Rule Changes:
American Stock Exchange LLC, 4027–4028
Boston Stock Exchange, Inc., 4028–4035
International Securities Exchange, LLC, 4035–4036
New York Stock Exchange LLC, 4036–4038
Philadelphia Stock Exchange, Inc., 4038–4040

State Department
RULES
Card Format Passport; Changes to Passport Fee Schedule; Correction, 3867

Surface Mining Reclamation and Enforcement Office
PROPOSED RULES
Kansas Regulatory Program, 3894–3898

Thrift Supervision Office
NOTICES
Interagency Charter and Federal Deposit Insurance Application, 4046

Transportation Department
See Federal Aviation Administration
See National Highway Traffic Safety Administration

Treasury Department
See Foreign Assets Control Office
See Internal Revenue Service
See Thrift Supervision Office

U.S. Customs and Border Protection
NOTICES
Agency Information Collection Activities; Proposals, Submissions, and Approvals, 3981–3985

Veterans Affairs Department
NOTICES
Agency Information Collection Activities; Proposals, Submissions, and Approvals, 4046–4049

Reader Aids

Consult the Reader Aids section at the end of this issue for phone numbers, online resources, finding aids, reminders, and notice of recently enacted public laws.

To subscribe to the Federal Register Table of Contents LISTSERV electronic mailing list, go to http://listserv.access.gpo.gov and select Online mailing list archives, FEDREGTOC-L, Join or leave the list (or change settings); then follow the instructions.

CFR PARTS AFFECTED IN THIS ISSUE

A cumulative list of the parts affected this month can be found in the Reader Aids section at the end of this issue.

10 CFR
707 3861

14 CFR
39 3863

Proposed Rules:
23 (3 documents) ... 3881, 3882, 3884
39 (4 documents) ... 3885, 3887, 3889, 3891

22 CFR
22 3867
51 3867

24 CFR
970 3867

26 CFR
1 3868
602 3868

29 CFR

Proposed Rules:
1926 3893

30 CFR

Proposed Rules:
916 3894

37 CFR

Proposed Rules:
201 3898

40 CFR

Proposed Rules:
62 3900

42 CFR
72 3874

49 CFR

Proposed Rules:
571 3901

50 CFR
679 (2 documents) 3879

Rules and Regulations

Federal Register
Vol. 73, No. 15
Wednesday, January 23, 2008

This section of the FEDERAL REGISTER contains regulatory documents having general applicability and legal effect, most of which are keyed to and codified in the Code of Federal Regulations, which is published under 50 titles pursuant to 44 U.S.C. 1510.

The Code of Federal Regulations is sold by the Superintendent of Documents. Prices of new books are listed in the first FEDERAL REGISTER issue of each week.

DEPARTMENT OF ENERGY

10 CFR Part 707

RIN 1992–AA38

Workplace Substance Abuse Programs at DOE Sites

AGENCY: Office of Health, Safety and Security, Department of Energy.

ACTION: Final rule.

SUMMARY: The Department of Energy (DOE) today publishes a final rule to amend the Department's regulations to decrease the random drug testing rate of DOE contractor employees in testing designated positions (TDP). Today's final rule also makes minor technical changes that delete: A sentence pertaining to specimen collection and handling in order to conform the section with the current U.S. Department of Health and Human Services' *Mandatory Guidelines for Federal Workplace Drug Testing Programs*; and obsolete references to the Personnel Security Assurance Program and the Personnel Assurance Program.

EFFECTIVE DATE: This rule is effective February 22, 2008.

FOR FURTHER INFORMATION CONTACT: Ms. Jacqueline D. Rogers, U.S. Department of Energy, Office of Health, Safety and Security, HS–11, 1000 Independence Avenue, SW., Washington, DC 20585; (202) 586–4714 or *jackie.rogers@hq.doe.gov*.

SUPPLEMENTARY INFORMATION:

I. Background
II. Discussion of Amendments
III. Issuance of a Final Rule
IV. Procedural Review Requirements
A. Review Under Executive Order 12866
B. Review Under National Environmental Policy Act
C. Review Under the Regulatory Flexibility Act
D. Review Under the Paperwork Reduction Act
E. Review Under the Unfunded Mandates Reform Act of 1995
F. Review Under the Treasury and General Government Appropriations Act, 1999
G. Review Under Executive Order 13132
H. Review Under Executive Order 12988
I. Review Under the Treasury and General Government Appropriations Act, 2001
J. Review Under Executive Order 13211
K. Congressional Notification
V. Approval by the Office of the Secretary of Energy

I. Background

Pursuant to the Department of Energy's (DOE or the Department) statutory authority, including the Atomic Energy Act of 1954, as amended and the Drug-Free Workplace Act of 1988, DOE promulgated a rule on July 22, 1992, on DOE contractor workplace substance abuse programs (57 FR 32652). The rule established minimum requirements for DOE contractors to use in developing and implementing programs that deal with the use of illegal drugs by their employees. The rule provided for drug testing of contractor employees in, and applicants for, testing designated positions (TDP) at sites owned or controlled by DOE and operated under the authority of the Atomic Energy Act of 1954. The Department determined that possible risks of serious harm to the environment and to public health, safety, and national security justified the imposition of a uniform rule establishing a baseline workplace substance abuse program, including drug testing. The rule created a new Part 707 of Title 10 in the Code of Federal Regulations entitled *Workplace Substance Abuse Programs at DOE Sites*.

In consideration of the February 2007 report on the Task Force Review of the Departmental Personnel Security Program, the Secretary of Energy issued a memorandum on September 14, 2007 addressing drug testing for DOE positions that require access authorizations (security clearances) (*http://www.directives.doe.gov/pdfs/reftools/Drug_Testing.pdf*). The DOE Secretarial Memorandum stated the Secretary's determination that all Federal and contractor positions that require a security clearance (''Q'' and ''L'') and all positions occupied by individuals who currently have security clearances have the potential to significantly affect the environment, public health and safety, or national security. The Secretary determined that all applicants for, and employees in, such positions are considered to be in TDPs, meaning they are subject to applicant, random, and for cause drug testing. This decision regarding TDPs is being implemented in accordance with DOE Order 3792.3 (for Federal employees) and 10 CFR Part 707 (for DOE contractor employees). The Secretary further determined, with regard to random drug testing, that employees in TDPs other than those designated to be included in the 100 percent annual sample pool be tested at a 30 percent annual sample rate.

II. Discussion of Amendments

Today's final rule amends the Department of Energy's regulations on workplace substance abuse programs at DOE sites to decrease the random drug testing rate of contractor employees in TDPs other than those in the 100 percent rate of testing pool. Currently, 10 CFR 707.7(a)(2) provides that for these TDPs, contractor programs ''shall provide for random tests at a rate equal to 50 percent of the total number of employees [in these TDPs] for each 12 month period.'' Today's final rule replaces ''50'' with ''30,'' consistent with the Secretary's decision to decrease the random drug testing rate in conjunction with his decision to expand the TDPs to include all applicants for, and employees in, positions requiring a security clearance.

This final rule makes a minor technical amendment to update the specimen collection and handling provision to reflect current U.S. Department of Health and Human Services' (HHS) *Mandatory Guidelines for Federal Workplace Drug Testing Programs*. Contractor substance abuse programs are subject to the HHS Mandatory Guidelines, as well as Part 707 (see 10 CFR 707.5(a)). Section 707.12 addresses specimen collection, handling, and laboratory analysis. Section 707.12(b)(2) requires collecting a sufficient amount of urine to conduct an initial test, a confirmatory test, and a retest, in accordance with the HHS Mandatory Guidelines. If there is not a sufficient amount, the collection site person may give the individual additional time in which to provide urine for testing. In this situation, the current regulation provides that the partial specimens are to be combined in

a single container. The sentence requiring the combining of partial specimens in a single container is not consistent with current HHS Mandatory Guidelines, and, therefore, this final rule removes the sentence.

The final rule also makes a minor technical amendment to delete references to the Personnel Security Assurance Program and the Personnel Assurance Program since both of these programs were cancelled with the publication of 10 CFR part 712, *Human Reliability Program*.

III. Issuance of a Final Rule

DOE has determined, pursuant to 5 U.S.C. 553(b)(B), that prior notice and an opportunity for public comment on this rule are unnecessary. DOE has determined that the two changes DOE is making to Part 707 are so minor or technical that the public would have no particular interest in providing comments. As explained earlier in this preamble, DOE is revising section 707.7(a)(2) to reduce the annual random drug testing sample from 50 percent to 30 percent. The change in the rate of testing of Federal employees in TDPs (other than employees in the 100 percent testing pool) already is being implemented by the Office of Human Resources. Today's amendment of section 707.7(a)(2) establishes parity in the treatment of Federal employees and contractor employees, and by decreasing the frequency of testing, reduces any burden associated with drug testing of contractor employees in these positions.

As to the amendment of section 707.12(b)(2), the deletion of the sentence pertaining to specimen collection and handling is a technical change that is necessary to conform the section with the current HHS Mandatory Guidelines.

Based on the foregoing, DOE finds that good cause exists to waive the requirement to provide prior notice and an opportunity to comment for this rulemaking.

IV. Procedural Review Requirements

A. Review Under Executive Order 12866

Today's regulatory action has been determined not to be a ''significant regulatory action'' under Executive Order 12866, ''Regulatory Planning and Review,'' 58 FR 51735 (October 4, 1993). Accordingly, this action is not subject to review under that Executive Order by the Office of Information and Regulatory Affairs (OIRA) of the Office of Management and Budget (OMB).

B. Review Under the National Environmental Policy Act

DOE has determined that this final rule is covered under the Categorical Exclusion found in DOE's National Environmental Policy Act regulations at paragraph A.5 of Appendix A to Subpart D, 10 CFR, Part 1021, which applies to a rulemaking that amends an existing rule or regulation which does not change the environmental effect of the rule or regulation being amended.

C. Review Under the Regulatory Flexibility Act

The Regulatory Flexibility Act (5 U.S.C. 601 *et seq.*) requires preparation of an initial regulatory flexibility analysis for any rule that by law must be proposed for public comment, unless the agency certifies that the rule, if promulgated, will not have a significant economic impact on a substantial number of small entities. As required by Executive Order 13272, ''Proper Consideration of Small Entities in Agency Rulemaking,'' 67 FR 53461 (August 16, 2002), DOE published procedures and policies on February 19, 2003, to ensure that the potential impacts of its rules on small entities are properly considered during the rulemaking process (68 FR 7990). DOE has made its procedures and policies available on the Office of the General Counsel's Web site: *http://www.gc.doe.gov*.

DOE has found that based on good cause prior notice and opportunity for public comments are unnecessary; and, therefore, the Regulatory Flexibility Act does not apply to today's rule. Accordingly, DOE has not prepared a regulatory flexibility analysis for this rulemaking.

D. Review Under the Paperwork Reduction Act

This rule does not impose any new collection of information subject to review and approval by OMB under the Paperwork Reduction Act (44 U.S.C. 3501 *et seq.*).

E. Review Under the Unfunded Mandates Reform Act of 1995

The Unfunded Mandates Reform Act of 1995 (Pub. L. 104–4) generally requires Federal agencies to examine closely the impacts of regulatory actions on State, local, and tribal governments. Subsection 101(5) of title I of that law defines a Federal intergovernmental mandate to include any regulation that would impose upon State, local, or tribal governments an enforceable duty, except a condition of Federal assistance or a duty arising from participating in a voluntary Federal program. Title II of that law requires each Federal agency to assess the effects of Federal regulatory actions on State, local, and tribal governments, in the aggregate, or to the private sector, other than to the extent such actions merely incorporate requirements specifically set forth in a statute. Section 202 of that title requires a Federal agency to perform a detailed assessment of the anticipated costs and benefits of any rule that includes a Federal mandate, which may result in costs to State, local or tribal governments, or to the private sector, of $100 million or more in any one year (adjusted annually for inflation). Section 204 of that title requires each agency that proposes a rule containing a significant Federal intergovernmental mandate to develop an effective process for obtaining meaningful and timely input from elected officers of State, local, and tribal governments.

This final rule does not impose a Federal mandate on State, local or tribal governments. The rule would not result in the expenditure by State, local, and tribal governments in the aggregate, or by the private sector, of $100 million or more in any one year. Accordingly, no assessment or analysis is required under the Unfunded Mandates Reform Act of 1995.

F. Review Under the Treasury and General Government Appropriations Act, 1999

Section 654 of the Treasury and General Government Appropriations Act, 1999 (Pub. L. 105–277), requires Federal agencies to issue a Family Policymaking Assessment for any rulemaking that may affect family well-being. This rule would not have any impact on the autonomy or integrity of the family as an institution. Accordingly, DOE has concluded that it is not necessary to prepare a Family Policymaking Assessment.

G. Review Under Executive Order 13132

Executive Order 13132, ''Federalism,'' 64 FR 43255 (August 4, 1999) imposes certain requirements on agencies formulating and implementing policies or regulations that preempt State law or that have federalism implications. Agencies are required to examine the constitutional and statutory authority supporting any action that would limit the policymaking discretion of the States and carefully assess the necessity for such actions. DOE has examined this rule and has determined that it would not preempt State law and would not have a substantial direct effect on the States, on the relationship between the national government and the States, or on the distribution of power and

responsibilities among the various levels of government. No further action is required by Executive Order 13132.

H. Review Under Executive Order 12988

With respect to the review of existing regulations and the promulgation of new regulations, section 3(a) of Executive Order 12988, ''Civil Justice Reform,'' 61 FR 4729 (February 7, 1996), imposes on Executive agencies the general duty to adhere to the following requirements: (1) Eliminate drafting errors and ambiguity; (2) write regulations to minimize litigation; and (3) provide a clear legal standard for affected conduct rather than a general standard and promote simplification and burden reduction. With regard to the review required by section 3(a), section 3(b) of Executive Order 12988 specifically requires that Executive agencies make every reasonable effort to ensure that the regulation: (1) Clearly specifies the preemptive effect, if any; (2) clearly specifies any effect on existing Federal law or regulation; (3) provides a clear legal standard for affected conduct while promoting simplification and burden reduction; (4) specifies the retroactive effect, if any; (5) adequately defines key terms; and (6) addresses other important issues affecting clarity and general draftsmanship under any guidelines issued by the Attorney General. Section 3(c) of Executive Order 12988 requires Executive agencies to review regulations in light of applicable standards in section 3(a) and section 3(b) to determine whether they are met or it is unreasonable to meet one or more of them. DOE has completed the required review and determined that, to the extent permitted by law, this final rule meets the relevant standards of Executive Order 12988.

I. Review Under the Treasury and General Government Appropriations Act, 2001

The Treasury and General Government Appropriations Act, 2001 (44 U.S.C. 3516 note) provides for agencies to review most disseminations of information to the public under guidelines established by each agency pursuant to general guidelines issued by OMB. OMB's guidelines were published at 67 FR 8452 (February 22, 2002), and DOE's guidelines were published at 67 FR 62446 (October 7, 2002). DOE has reviewed today's rule under OMB and DOE guidelines and has concluded that it is consistent with applicable policies in those guidelines.

J. Review Under Executive Order 13211

Executive Order 13211, ''Actions Concerning Regulations That Significantly Affect Energy Supply, Distribution, or Use,'' 66 FR 28355 (May 22, 2001) requires Federal agencies to prepare and submit to OMB, a Statement of Energy Effects for any proposed significant energy action. A ''significant energy action'' is defined as any action by an agency that promulgated or is expected to lead to promulgation of a final rule, and that: (1) Is a significant regulatory action under Executive Order 12866, or any successor order; and (2) is likely to have a significant adverse effect on the supply, distribution, or use of energy, or (3) is designated by the Administrator of OIRA as a significant energy action. For any proposed significant energy action, the agency must give a detailed statement of any adverse effects on energy supply, distribution, or use should the proposal be implemented, and of reasonable alternatives to the action and their expected benefits on energy supply, distribution, and use. Today's rule would not have a significant adverse effect on the supply, distribution, or use of energy and is therefore not a significant energy action. Accordingly, DOE has not prepared a Statement of Energy Effects.

K. Congressional Notification

As required by 5 U.S.C. 801, the Department will submit to Congress a report regarding the issuance of today's final rule prior to the effective date set forth at the outset of this rule. The report will state that it has been determined that the rule is not a ''major rule'' as defined by 5 U.S.C. 801(2).

V. Approval by the Office of the Secretary of Energy

Issuance of this rule has been approved by the Office of the Secretary.

List of Subjects in 10 CFR Part 707

Classified information, Drug testing, Employee assistance programs, Energy, Government contracts, Health and safety, National security, Reasonable suspicion, Special nuclear material, Substance abuse.

Issued in Washington, DC, on January 15, 2008.

Glenn S. Podonsky,

Chief Health, Safety and Security Officer, Office of Health, Safety and Security.

■ For the reasons set out in the preamble, DOE amends part 707 of Chapter III of Title 10 of the Code of Federal Regulations as set forth below:

PART 707—WORKPLACE SUBSTANCE ABUSE PROGRAMS AT DOE SITES

■ 1. The authority citation for part 707 is revised to read as follows:

Authority: 41 U.S.C. 701 *et seq.;* 42 U.S.C. 2012, 2013, 2051, 2061, 2165, 2201b, 2201i, and 2201p; 42 U.S.C. 5814 and 5815; 42 U.S.C. 7151, 7251, 7254, and 7256; 50 U.S.C. 2401 *et seq.*

■ 2. Section 707.7 is amended as follows:

■ a. Paragraph (a)(2) is amended by removing ''50'' and adding in its place ''30'' in the first sentence.

■ b. Paragraph (b)(1) is revised;

■ c. Paragraph (b)(2) is removed;

■ d. Paragraphs (b)(3) and (b)(4) are redesignated as (b)(2) and (b)(3).

The revision read as follows:

§ 707.7 Random drug testing requirements and identification of testing designated positions.

* * * * *

(b) * * *

(1) Positions determined to be covered by the Human Reliability Program (HRP), codified at 10 CFR part 712. HRP employees will be subject to the drug testing standards of this part and any additional requirements of the HRP rule.

* * * * *

§ 707.12 [Amended]

■ 3. In § 707.12, paragraph (b)(2) is amended by removing the fifth sentence.

[FR Doc. E8–1084 Filed 1–22–08; 8:45 am]

BILLING CODE 6450–01–P

DEPARTMENT OF TRANSPORTATION

Federal Aviation Administration

14 CFR Part 39

[Docket No. FAA–2006–25609; Directorate Identifier 2005–NM–263–AD; Amendment 39–15335; AD 2008–02–05]

RIN 2120–AA64

Airworthiness Directives; Boeing Model 777–200 and –300 Series Airplanes Equipped With Rolls-Royce RB211–TRENT 800 Series Engines

AGENCY: Federal Aviation Administration (FAA), Department of Transportation (DOT).

ACTION: Final rule.

SUMMARY: The FAA is adopting a new airworthiness directive (AD) for certain Boeing Model 777–200 and –300 series airplanes. This AD requires revising the airplane flight manual to provide the

flightcrew with new ground procedures for shedding core ice during long taxi periods in freezing fog with visibility of 300 meters or less. For airplanes unable to perform the shedding procedure after prolonged taxiing in freezing fog with visibility of 300 meters or less, this AD requires certain investigative and corrective actions. This AD results from reports of engine surges and internal engine damage due to ice accumulation during extended idle thrust operation in ground fog icing conditions. We are issuing this AD to prevent internal engine damage due to ice accumulation and shedding, which could cause a shutdown of both engines, and result in a forced landing of the airplane.

DATES: This AD becomes effective February 27, 2008.

ADDRESSES: For service information identified in this AD, contact Boeing Commercial Airplanes, P.O. Box 3707, Seattle, Washington 98124–2207.

Examining the AD Docket

You may examine the AD docket on the Internet at *http://www.regulations.gov*; or in person at the Docket Management Facility between 9 a.m. and 5 p.m., Monday through Friday, except Federal holidays. The AD docket contains this AD, the regulatory evaluation, any comments received, and other information. The address for the Docket Office (telephone 800–647–5527) is the Document Management Facility, U.S. Department of Transportation, Docket Operations, M–30, West Building Ground Floor, Room W12–140, 1200 New Jersey Avenue, SE., Washington, DC 20590.

FOR FURTHER INFORMATION CONTACT: Margaret Langsted, Aerospace Engineer, Propulsion Branch, ANM–140S, FAA, Seattle Aircraft Certification Office, 1601 Lind Avenue, SW., Renton, Washington 98057–3356; telephone (425) 917–6500; fax (425) 917–6590.

SUPPLEMENTARY INFORMATION:

Discussion

The FAA issued a notice of proposed rulemaking (NPRM) to amend 14 CFR part 39 to include an AD that would apply to certain Boeing Model 777–200 and –300 series airplanes. That NPRM was published in the **Federal Register** on August 18, 2006 (71 FR 47754). That NPRM proposed to require revising the airplane flight manual to provide the flightcrew with new ground procedures for shedding core ice during long taxi periods in freezing fog. For airplanes unable to perform the shedding procedure after prolonged taxiing in freezing fog, that NPRM proposed to require certain investigative and corrective actions.

Comments

We provided the public the opportunity to participate in the development of this AD. We have considered the comments received.

Requests To Reduce Visibility Requirements

Boeing, Rolls-Royce, the European Aviation Safety Agency (EASA), and Air Transport Association (ATA), on behalf of American Airlines, all request that we reduce the visibility requirements during a ground fog icing encounter. The commenters request that the current 1,000-meter or less visibility requirements be reduced to 300-meters or less visibility. Rolls-Royce has performed an analysis based on atmospheric data and service experience that demonstrates that freezing fog presents a threat to the engine only when the visibility drops below 300 meters; EASA has accepted this analysis. Boeing states that this change will minimize the need for the run-up to only those freezing fog conditions that are severe enough to pose a risk.

We agree with the commenters. Sufficient data have been presented to the FAA to justify a reduction from the 1,000-meter visibility requirement to a 300-meter visibility requirement. We have revised the statement in the Summary section, and paragraphs (f), (h) and (i) of the final rule to state ''in freezing fog with visibility of 300 meters or less.''

Requests To Remove Specific Airplane Maintenance Manual (AMM) Task References, and To Refer to Current Procedures

Boeing, Rolls-Royce, and ATA, on behalf of its members Delta Airlines and American Airlines, request that we refer to the Boeing 777 AMM for the de-icing procedures, rather than specific changes in the AMM. Rolls-Royce points out that the specified tasks are only examples of an acceptable inspection method; referring to a specific task/issue of the AMM in an AD will lead to many requests for alternative methods of compliance (AMOCs) from operators after AMM revisions. ATA states that the specific tasks do not exist in the AMM available to one of its members.

In addition, Boeing, Rolls-Royce, and American Airlines state that the AMM procedures for doing the engine core de-icing (referred to in paragraph (h) of the NPRM) are outdated. The commenters explain that Rolls-Royce and Boeing did testing to determine the best way to conduct the procedure, and that the best solution is included in the latest AMM procedure. The commenters state that this is another example of why we should not refer to specific AMM tasks in the AD.

For the stated reasons, we agree with the commenters that we should refer to the Boeing 777 AMM, rather than specific tasks. Therefore, we have changed paragraphs (h) and (h)(2) of the AD to specify that Chapter 12–33–03 of the Boeing 777 AMM, rather than the specific tasks, provides acceptable methods of compliance. We also added a statement to paragraph (h)(2) of this AD indicating that the temperature of the air supplied cannot exceed 176 degrees Fahrenheit at any time during the manual de-ice process. Air that exceeds 176 degrees Fahrenheit can damage the engine.

Requests To Clarify Borescope Inspection Requirements

Boeing and Rolls-Royce request that we clarify and revise the requirements for the borescope inspection, and that we specify inspecting the intermediate pressure compressor (IPC) blades unless damage indicates that material has been released. The commenters state that inspection of other compressor stages would be necessary if the material has been released. Rolls-Royce explains that if no material has been released from the IPC stage 1 blades then there will be no secondary damage to the high pressure compressor (HPC), so inspection is not required. If material is missing from the IPC stage 1, the engine must have a full borescope inspection of both the IPC and the HPC. Damage to the IPC stage 1 blades without material release would be treated under the current AMM acceptance limits. Boeing and Rolls-Royce state that the borescope procedure to look for damage is conducted routinely by the airlines, and that it is not necessary to mandate the current borescoping method in the AMM.

We agree with the requests to clarify the borescope inspection procedures. The risk of engine failure is a direct result of HPC damage; if there is no material released from the IPC stage 1 blades, then there will be no resulting damage to the HPC. We have revised paragraph (i) of the AD to clarify the borescope procedures and to specify that Chapter 72–00–00 of the Boeing 777 AMM is one approved method for complying with the requirements of that paragraph. We acknowledge that the borescope procedure is conducted routinely by the airlines; however, an AD must specify a method of compliance for all required actions and, in cases where there is no relevant

service bulletin as with this AD, we generally point to the AMM as an acceptable method of compliance.

Request To Place Core Ice Shedding Procedures in Operations Manual

Vincent Crow, a private citizen, would like to have the core ice shedding procedures (described in paragraph (f) of the NPRM) as a part of Operations Manual Volume 1 (OMV1) as a supplementary procedure in the adverse weather section. Paragraph (f) of the NPRM specifies publishing these procedures in the Airplane Flight Manual (AFM) as a certification limitation.

We disagree with the request to publish the procedures in OMV1. OMV1 is not approved or mandated by the FAA. The AFM limitations are approved and mandated by the FAA. In addition, all limitations in the AFM are required to be incorporated into the operations manual. We have not changed the AD in this regard.

Requests To Withdraw NPRM

Boeing, and ATA, on behalf of its member American Airlines, state that the NPRM is unnecessary because the freezing fog procedure (paragraph (f) of the NPRM) is already included in the FAA-approved AFM Limitations section.

We infer that the commenters would like us to withdraw the NPRM. We do not agree. Although the AFM has been revised to reflect the proposed requirements in the NPRM, the operators are not required to adopt the latest revision of the AFM. Therefore, the procedures in paragraph (f) of the NPRM would not be required unless we take AD action. We have not changed the AD in this regard.

Request To Address Risk of Sliding When Power Is Advanced

The National Transportation Safety Board (NTSB) is concerned that the environmental conditions that cause the engine core icing could also cause the taxiway surface to become icy and slippery, thereby increasing the risk of the airplane sliding off the taxiway or into another airplane when the crew advances the power to shed the core ice.

We infer that the NTSB would like us to add procedures to the AD to require actions that do not involve advancing engine power. We disagree that the procedures will result in the airplane sliding. The procedures mandated by the AD were developed with a reduced thrust setting to minimize the potential for sliding. Based on discussions with operators, we understand that the pilot will locate the airplane in a safe place to do the run-ups. We have addressed the possibility of the pilot not being able to perform the engine run-up by allowing operators to manually de-ice before takeoff, or to take off with the subsequent requirement of a borescope inspection. We have not changed the AD in this regard.

Request To Redesign the Engine

The NTSB suggests that, in the long term, the FAA require that engines be modified so that the airfoil surfaces where ice is building up are heated to prevent the buildup. The NTSB notes that early-generation gas turbine engines had inlet guide vanes that were pneumatically heated to prevent the formation of ice. The NTSB goes on to say that several safety recommendations have been issued concerning ice buildup on the stationary parts of the engine, causing engine core damage when shed.

We disagree with the suggestion to require modification to the engines to prevent ice buildup during extended exposure to ground fog icing. The Trent 800 series engine would require extensive testing and redesign to add additional anti-ice capability. History has shown that the frequency of ground icing encounters are rare and it would not be cost effective to redesign the engine given that there are operational procedures that adequately address the unsafe condition. The NTSB refers to safety recommendations that were issued as a result of dual engine high-altitude flameouts from ice buildup on the engine core. While extended exposure to ground fog icing does cause ice buildup in the engine core, the requirement of periodic engine speed run-ups is consistent with other ground-based icing operational procedures. We have not changed the AD in this regard.

Request To Include Costs of Run-Up, Manual De-Ice, and Borescope

Boeing requests that we include the cost of disruption to the airline when a run-up, manual de-ice, or borescope inspection is needed. Boeing points out that the AD mandates the procedure, and if the operator conducts the procedure it will require delay, and possibly maintenance action.

We disagree with the request to include these costs in the Costs of Compliance section. We recognize that this AD may impose certain additional operational costs. However, we cannot calculate those costs because we do not know how often the conditions occur and what additional time is necessary. Continued operational safety necessitates the imposition of these costs because of the severity of the unsafe condition. In addition, the cost analysis in AD actions typically does not include incidental costs such as the time required to gain access and close up, time necessary for planning, or time necessitated by other administrative actions. Those incidental costs, which might vary significantly among operators, are almost impossible to calculate. We have not changed the AD in this regard.

Requests To Provide Terminating Action

Boeing and Rolls-Royce request that we provide a clear terminating action for the actions proposed in the NPRM. Boeing states that the AD should be considered complied with and closed once the procedure to perform the engine run-up is inserted in the AFM. Boeing points out that the engine procedures for inspecting for ice and manually de-icing should be part of the airlines' approved de-ice/anti-ice procedures, and like the wing de-ice procedures, the methods to accomplish them are not mandated by AD. Boeing and Rolls-Royce both suggest adding information to paragraph (g) of the NPRM that would specify that, once the procedures are incorporated into the operator's approved ground de-icing/anti-icing program, the AD should be considered complied with.

We disagree with the need to add terminating action to paragraph (g) of the AD. The Limitations section in the AFM includes maintenance actions that are not performed by the flightcrew and cannot be required without an AD. As discussed above, Boeing and Rolls-Royce do not plan to make an engine or airplane configuration change that would eliminate the need for the AFM and maintenance procedures mandated by this AD, and thus provide terminating action. We have not changed the AD in this regard.

Requests To Specify Lack of Events With Trent 800

Boeing and Rolls-Royce ask that we clarify the summary and paragraph (d) of the NPRM to specify that Trent 800 series engines (the subject of the proposed AD) have not experienced engine surges and internal engine damage due to ice accumulation during extended idle thrust operation in ground fog icing conditions.

We acknowledge that Trent 800 series engines have not experienced the stated events, as described in the ''Discussion'' and ''Similar Engine Models'' sections of the NPRM. As stated in the preamble of the NPRM, both the Trent 700 series engines and the Trent 800 series engines have a similar compressor design, and

therefore may be subject to the same unsafe condition. We find that this information need not be added to the AD Summary section, or to any regulatory paragraphs of the AD.

Request To Clarify Paragraphs (f) and (h) of the NPRM

EASA requests that we clarify the wording of the AFM revision by revising the phrase ''there is no run-up procedure'' in paragraph (f) (sub-paragraph (c) of the AFM revision) of the NPRM to state, instead, ''do not carry out a run-up.'' In that same paragraph, EASA also requests that we add after ''then manually de-ice the engines'' the phrase ''or confirm ice is not present in the engine core before further flight.'' EASA also requests that we add ''or 60 minutes since the last run-up'' after the phrase ''if take-off is not accomplished in freezing fog within 60 minutes total taxi time'' in paragraph (h) of the NPRM.

We agree that clarification is necessary. However, we do not agree that it is necessary to revise the phrase as specified. After 60 minutes, there is no run-up procedure that will shed the ice. As a clarification, we have revised the AFM wording specified in paragraph (f) of the AD to read ''Takeoff is not permitted if total taxi time in freezing fog with visibility of 300 meters or less exceeds 60 minutes without accomplishing the above core ice shed procedure. The engine core must be manually de-iced'' instead of ''If takeoff is not accomplished within 60 minutes total taxi time, then manually de-ice the engines.''

Explanation of Revised Unsafe Condition

We have revised the unsafe condition to state that internal engine damage could result in a forced landing rather than in loss of control of the airplane. Upon further review of the regulations, we determined that a power loss in this case does not leave the airplane uncontrollable, but rather leads to a forced landing.

Explanation of Revised AMOC Paragraph

We have removed paragraph (j)(3) of the NPRM. That paragraph refers to alternative repair methods, and this AD does not include a repair.

Conclusion

We have carefully reviewed the available data, including the comments received, and determined that air safety and the public interest require adopting the AD with the changes described previously. We have determined that these changes will neither increase the economic burden on any operator nor increase the scope of the AD.

Costs of Compliance

There are about 208 airplanes of the affected design in the worldwide fleet. This AD affects about 53 airplanes of U.S. registry. The actions take about 1 work hour per airplane, at an average labor rate of $80 per work hour. Based on these figures, the estimated cost of the AD for U.S. operators is $4,240, or $80 per airplane.

Authority for This Rulemaking

Title 49 of the United States Code specifies the FAA's authority to issue rules on aviation safety. Subtitle I, Section 106, describes the authority of the FAA Administrator. Subtitle VII, Aviation Programs, describes in more detail the scope of the Agency's authority.

We are issuing this rulemaking under the authority described in Subtitle VII, Part A, Subpart III, Section 44701, ''General requirements.'' Under that section, Congress charges the FAA with promoting safe flight of civil aircraft in air commerce by prescribing regulations for practices, methods, and procedures the Administrator finds necessary for safety in air commerce. This regulation is within the scope of that authority because it addresses an unsafe condition that is likely to exist or develop on products identified in this rulemaking action.

Regulatory Findings

We have determined that this AD will not have federalism implications under Executive Order 13132. This AD will not have a substantial direct effect on the States, on the relationship between the national government and the States, or on the distribution of power and responsibilities among the various levels of government.

For the reasons discussed above, I certify that this AD:

(1) Is not a ''significant regulatory action'' under Executive Order 12866;

(2) Is not a ''significant rule'' under DOT Regulatory Policies and Procedures (44 FR 11034, February 26, 1979); and

(3) Will not have a significant economic impact, positive or negative, on a substantial number of small entities under the criteria of the Regulatory Flexibility Act.

We prepared a regulatory evaluation of the estimated costs to comply with this AD and placed it in the AD docket. See the **ADDRESSES** section for a location to examine the regulatory evaluation.

List of Subjects in 14 CFR Part 39

Air transportation, Aircraft, Aviation safety, Safety.

Adoption of the Amendment

■ Accordingly, under the authority delegated to me by the Administrator, the FAA amends 14 CFR part 39 as follows:

PART 39—AIRWORTHINESS DIRECTIVES

■ 1. The authority citation for part 39 continues to read as follows:

Authority: 49 U.S.C. 106(g), 40113, 44701.

§ 39.13 [Amended]

■ 2. The Federal Aviation Administration (FAA) amends § 39.13 by adding the following new airworthiness directive (AD):

2008–02–05 Boeing: Amendment 39–15335. Docket No. FAA–2006–25609; Directorate Identifier 2005–NM–263–AD.

Effective Date

(a) This AD becomes effective February 27, 2008.

Affected ADs

(b) None.

Applicability

(c) This AD applies to Boeing Model 777–200 and –300 series airplanes, certificated in any category, equipped with Rolls-Royce RB211 TRENT 800 engines.

Unsafe Condition

(d) This AD results from reports of engine surges and internal engine damage due to ice accumulation during extended idle thrust operation in ground fog icing conditions. We are issuing this AD to prevent internal engine damage due to ice accumulation and shedding, which could cause a shutdown of both engines, and result in a forced landing of the airplane.

Compliance

(e) You are responsible for having the actions required by this AD performed within the compliance times specified, unless the actions have already been done.

Airplane Flight Manual (AFM) Revision

(f) Within 14 days after the effective date of this AD, revise the Limitations Section of the Boeing 777 Airplane Flight Manual (AFM) to include the following statements. This may be done by inserting a copy of this AD in the AFM.

''GROUND OPERATIONS IN FREEZING FOG WITH VISIBILITY OF 300 METERS OR LESS

When freezing fog with visibility of 300 meters or less is reported and

(a) The OAT is 0 degrees C to −6 degrees C then run up the engines to 50% N1 for 1 minute every 45 minutes taxi time, or

(b) The OAT is −7 degrees C to −13 degrees C then run up the engines to 59% N1 for 1 minute for every 45 minutes taxi time, or

(c) The OAT is colder than −13 degrees C and taxi time exceeds 45 minutes, there is no run-up procedure; the engines must be manually de-iced.

Regardless of temperature, if the core ice shedding procedure described above is not accomplished within 45 minutes total taxi time in freezing fog with visibility of 300 meters or less, but takeoff can be achieved within 60 minutes total taxi time in freezing fog with visibility of 300 meters or less, takeoff is permitted. A borescope inspection is required within 10 flights. Takeoff is not permitted if total taxi time in freezing fog with visibility of 300 meters or less exceeds 60 minutes without accomplishing the above core ice shed procedure. The engine core must be manually de-iced.''

(g) When a statement identical to that in paragraph (f) of this AD has been included in the general revisions of the AFM, the general revisions may be inserted into the AFM, and the copy of this AD may be removed from the AFM.

Inspection for Ice

(h) If takeoff is not accomplished in freezing fog, with visibility of 300 meters or less, within 60 minutes total taxi time, before further flight, perform an inspection for ice of the variable inlet guide vanes (VIGVs), inspect the low pressure compressor (fan) for ice, and ensure that all fan, spinner, air intake splitter fairing, and VIGV surfaces are free of ice after engine operation in freezing fog with visibility of 300 meters or less, in accordance with a method approved by the Manager, Seattle Aircraft Certification Office (ACO). One acceptable method of compliance is Chapter 12–33–03 of the Boeing 777 Airplane Maintenance Manual (AMM).

(1) If no ice is detected, the time already completed in freezing conditions can be reset to zero for subsequent operation.

(2) If any ice is detected, before further flight, manually de-ice the engine core inlet. Upon completion of the manual de-ice process, the fan, spinner, air intake splitter fairing, and VIGV surfaces must be free of ice and all residual water removed. Two acceptable methods to manually de-ice the engine can be found in Chapter 12–33–03 of the Boeing 777 AMM. At no time during the manual de-ice process should the temperature of the air supplied exceed 176 degrees Fahrenheit.

Borescope Inspection for Damage

(i) For airplanes on which the core ice shedding procedure is not accomplished within 45 minutes total taxi time, but that achieve takeoff within 60 minutes total taxi time in freezing fog with visibility of 300 meters or less, regardless of temperature during ground operations in freezing fog with visibility of 300 meters or less: Within 10 flight cycles after takeoff, perform a borescope inspection to detect missing material of the intermediate pressure compressor (IPC) stage 1 blades. If any material is found to be missing, do a full borescope inspection of the IPC and high pressure compressor (HPC) before further flight. Do the actions in accordance with a method approved by the Manager, Seattle Aircraft Certification Office (ACO), FAA. One acceptable method of compliance is to perform all applicable borescope inspections in accordance with Chapter 72–00–00 of the Boeing 777 AMM. If any damage is detected, further action in accordance with the current AMM limits must be taken before further flight.

Alternative Methods of Compliance (AMOCs)

(j)(1) The Manager, Seattle ACO, FAA, has the authority to approve AMOCs for this AD, if requested in accordance with the procedures found in 14 CFR 39.19.

(2) To request a different method of compliance or a different compliance time for this AD, follow the procedures in 14 CFR 39.19. Before using any approved AMOC on any airplane to which the AMOC applies, notify your appropriate principal inspector (PI) in the FAA Flight Standards District Office (FSDO), or lacking a PI, your local FSDO.

Material Incorporated by Reference

(k) None.

Issued in Renton, Washington, on January 10, 2008.

Ali Bahrami,

Manager, Transport Airplane Directorate, Aircraft Certification Service.

[FR Doc. E8–843 Filed 1–22–08; 8:45 am]

BILLING CODE 4910–13–P

DEPARTMENT OF STATE

22 CFR Parts 22 and 51

[Public Notice: 6066]

RIN 1400–AC22

Card Format Passport; Changes to Passport Fee Schedule; Correction

AGENCY: Department of State.

ACTION: Final rule; correction.

SUMMARY: This document contains a correction to the Card Format Passport; Changes to Fee Schedule published in the **Federal Register** on December 31, 2007 (72 FR 74169).

DATES: Effective on February 1, 2008

FOR FURTHER INFORMATION CONTACT: Consuelo Pachon, Office of Legal Affairs and Law Enforcement Liaison, Bureau of Consular Affairs, 2100 Pennsylvania Avenue, NW., Suite 3000, Washington, DC, telephone number 202–663–2431.

Correction

The final rule published on December 31, 2007 (72 FR 74169) is corrected as follows:

1. In the **SUPPLEMENTARY INFORMATION** section, on page 74170, in the first column, the table is corrected by:

a. Removing the phrase ''(first time applicants only)'' after the phrase ''Passport Card Execution Fee;'' under paragraph (9)(c).

b. Removing the words ''First Time'' in the line reading ''Total First Time Child'' under paragraph (9)(c).

c. Removing the line ''Total renewal child'' in the first column and ''$10.'' in the second column under paragraph (9)(c).

■ 2. On page 74173, amendment number 2 and the corresponding text are corrected in its entirety, to read as follows:

''2. In § 22.1, the table is amended by removing the text at Item nos. 9 through 10, and by adding new entries for Items 9 and 10 in their place, to read as follows:

§ 22.1 Schedule of fees.

* * * * *

SCHEDULE OF FEES FOR CONSULAR SERVICES

Item No.	Fee
Passport and Citizenship Services	
9. Passport Card Services:	
(a) Application fee for applicants age 16 or over [Adult Passport Card] ..	$20
(b) Application fee for applicants under age 16 [Minor Passport Card]	10
(c) Execution fee [Passport Card Execution]	25
10. [Reserved]	

* * * * *

Dated: January 17, 2008.

Maura Harty,

Assistant Secretary, Bureau of Consular Affairs, Department of State.

[FR Doc. E8–1104 Filed 1–22–08; 8:45 am]

BILLING CODE 4710–06–P

DEPARTMENT OF HOUSING AND URBAN DEVELOPMENT

24 CFR Part 970

[Docket No. FR–4598–C–03]

RIN 2577–AC20

Demolition or Disposition of Public Housing Projects; Correction

AGENCY: Office of the Assistant Secretary for Public and Indian Housing, HUD.

ACTION: Correcting amendments.

SUMMARY: On October 24, 2006, HUD published a final rule revising the agency's regulations on demolition or disposition of public housing projects. This publication corrects certain typographical and other non-substantive errors that occurred in the final rule.

DATES: *Effective Date:* January 23, 2008. *Applicability Date:* November 24, 2006.

FOR FURTHER INFORMATION CONTACT: Ainars Rodins, Director, Public and Indian Housing Special Application Center, Department of Housing and Urban Development, Ralph H. Metcalfe Federal Building, 77 West Jackson Boulevard, Room 2401, Chicago, IL 60604–3507; telephone: (312) 353–6236 (this is not a toll-free number). Persons with hearing or speech impairments may access that number toll-free through TTY by calling the Federal Relay Service at (800) 877–8339.

SUPPLEMENTARY INFORMATION:

I. Background

On October 24, 2006 (71 FR 62354), HUD published a final rule revising the Department's regulations governing demolition or disposition of public housing projects. This final rule followed a December 15, 2004 (69 FR 75188), proposed rule. The final rule became effective on November 24, 2006. These HUD regulations implement section 18 of the United States Housing Act of 1937 (42 U.S.C. 1437p) (1937 Act), and are codified at 24 CFR part 970.

A. Technical Corrections

After publication, it came to HUD's attention that certain typographical and technical errors had occurred in items in the regulatory text.

- 24 CFR 970.3(b)(4) (71 FR 62362). The phrase ''incident to the normal operation * * *'' found in this section should have read ''incidental to the normal operation. * * *'' This grammatical correction does not change the meaning or function of the paragraph and is a technical correction.
- 24 CFR 970.3(b)(13) (71 FR 62363). Section 970.3(b)(13) refers to environmental review provisions, including the provisions at § 970.7(a)(16). The environmental provision is in paragraph (15), not paragraph (16), and therefore the intended reference should have been to § 970.7(a)(15). Section 970.7(a)(16) relates to civil rights. Because it is clear from the text that § § 970.7(a)(15) was the intended reference, this rule makes that technical correction.
- 24 CFR 970.9(b)(3)(vi) (71 FR 62365). Paragraph (b)(3)(vi) paragraph is out of sequence and was therefore incorrectly and inadvertently designated. This paragraph is correctly redesignated as § 970.9(b)(3)(v). This change does not alter the meaning or function of the paragraph and is a technical correction.
- 24 CFR 970.15(a) (71 FR 62367). This section makes a cross-reference to ''the criteria for disapproval under 24 CFR 270.29.'' There is no 24 CFR part 270. Furthermore, 24 CFR 970.29 is entitled ''Criteria for disapproval of demolition or disposition applications.'' The intended reference was to part 970. This reference is a typographical error and this rule corrects this error and references 24 CFR 970.29.
- 24 CFR 970.27 (71 FR 62369). This section is missing a paragraph designation. The paragraph as published in the final rule is designated as § 970.27(1). However the correct designation is § 970.27(c)(1). This appears to have been the result of a GPO error. This rule makes that technical correction.

List of Subjects in 24 CFR Part 970

Grant programs—housing and community development, Public housing, Reporting and recordkeeping requirements.

The Catalog of Federal Domestic Assistance program number for the program affected by this final rule is 14.850.

■ Accordingly, HUD correctly amends 24 CFR part 970 as follows:

PART 970—PUBLIC HOUSING PROGRAM—DEMOLITION OR DISPOSITION OF PUBLIC HOUSING PROJECTS

■ 1. The authority citation for part 970 continues to read as follows:

Authority: 42 U.S.C. 1437p and 3535(d).

§ 970.3 [Amended]

■ 2. Amend § 970.3 as follows:

■ a. In paragraph (b)(4), revise the phrase ''incident to the normal operation'' to read ''incidental to the normal operation;'' and

■ b. In paragraph (b)(13), revise the reference to ''§§ 970.7(a)(16) and 970.13(b) of this part'' with the reference ''§§ 970.7(a)(15) and (b)(13) of this part.''

§ 970.9 [Amended]

■ 3. In 970.9, redesignate paragraph (b)(3)(vi) as paragraph (b)(3)(v).

§ 970.15 [Amended]

■ 4. In, § 970.15(a), revise the reference to ''24 CFR 270.29'' to read ''24 CFR 970.29.''

§ 970.27 [Amended]

■ 5. In § 970.27 redesignate paragraphs (b)(1) and (b)(2) as paragraphs (c)(1) and (c)(2), respectively.

Dated: January 2, 2008.

Orlando J. Cabrera,

Assistant Secretary for Public and Indian Housing.

[FR Doc. E8–1014 Filed 1–22–08; 8:45 am]

BILLING CODE 4210–67–P

DEPARTMENT OF THE TREASURY

Internal Revenue Service

26 CFR Parts 1 and 602

[TD 9377]

RIN 1545–BF02

Application of Section 338 to Insurance Companies

AGENCY: Internal Revenue Service (IRS), Treasury.

ACTION: Final regulations and removal of temporary regulations.

SUMMARY: This document contains final regulations under section 197 of the Internal Revenue Code (Code) that apply to a section 197 intangible resulting from an assumption reinsurance transaction, and under section 338 that apply to reserve increases after a deemed asset sale. The final regulations also provide guidance with respect to existing section 846(e) elections to use historical loss payment patterns. The final regulations apply to insurance companies.

DATES: *Effective Date:* These regulations are effective on January 23, 2008.

Applicability Date: For date of applicability of these regulations, see § 1.197–2(g)(5)(ii)(E), § 1.338–11(d)(7) and § 1.846–4(b).

FOR FURTHER INFORMATION CONTACT: William T. Sullivan (202) 622–7052 or Donald J. Drees, Jr. (202) 622–3970 (not toll-free numbers).

SUPPLEMENTARY INFORMATION:

Paperwork Reduction Act

The collection of information in these final regulations has been reviewed and approved by the Office of Management and Budget in accordance with the Paperwork Reduction Act of 1995 (44 U.S.C. 3507(d)) under control number 1545–1990.

The collection of information in these final regulations is in § 1.338–11(e)(2). This information is required by the IRS to allow an insurance company to choose to cease using its historical loss payment pattern, and instead use industry-wide factors, to discount unpaid losses.

An agency may not conduct or sponsor, and the person is not required

to respond to a collection of information unless the collection of information displays a valid control number.

Books or records relating to a collection of information must be retained as long as their contents may become material in the administration of any internal revenue law. Generally, tax returns and tax information are confidential, as required by 26 U.S.C. 6103.

Background and Explanation of Provisions

On March 8, 2002, the IRS and the Treasury Department published a notice of proposed rulemaking REG–118861–00 in the **Federal Register** (67 FR 10640) (2002–1 Cumulative Bulletin (CB) 651) (the 2002 proposed regulations) that set forth rules applying to taxable acquisitions and dispositions of insurance businesses, including those that are deemed to occur when an election under section 338 of the Code is made. (See § 601.601(d)(2)(ii)(*b*)). The CB is made available by the Superintendent of Documents, U.S. Government Printing Office, Washington, DC 20402. Written comments were received in response to the 2002 proposed regulations, and a public hearing was held. After consideration of all the comments, the IRS and the Treasury Department published final regulations in the **Federal Register** on April 10, 2006, (TD 9257) (71 FR 17990), as corrected in the **Federal Register** (TD 9257) (71 FR 26826) to remove an error that might have proven to be misleading.

TD 9257 also contains temporary regulations under sections 197, 338, and 846, which serve as the basis for a cross-reference notice of proposed rulemaking published in the **Federal Register** (REG–146384–05) (71 FR 18053) with respect to issues that were the subject of comments on the 2002 proposed regulations. Specifically, § 1.197–2T(g)(5)(ii) provides guidance with regard to the interplay between section 197(f)(5) (concerning the treatment of certain reinsurance transactions) and section 848 (requiring the capitalization of certain policy acquisition expenses); § 1.338–11T(d) addresses reserve increases after a deemed asset sale that results from a section 338 election; and § 1.338–11T(e) provides guidance on the effect of a section 338 election on an insurance company's election under section 846(e) to use its historical loss payment pattern to discount certain unpaid losses.

Although the 2002 proposed regulations generated a number of comments which are discussed in detail in the preamble to TD 9257, no new comments were received with respect to the temporary regulations that served as a cross-reference notice of proposed rulemaking in 2006. Accordingly, this Treasury decision adopts the proposed regulations without substantive change and removes the corresponding temporary regulations. This Treasury decision also revises cross-references where appropriate to reflect the removal of temporary regulations and their replacement with final regulations and corrects two obvious errors, one a mathematical error in the last sentence of § 1.381(c)(22)–1(b)(7)(v), Example 3, the other an error in the captioning of § 1.338(i)–1(c)(2)(ii)(B).

Special Analyses

It has been determined that this Treasury decision is not a significant regulatory action as defined in Executive Order 12866. Therefore, a regulatory assessment is not required. It is hereby certified that the collection of information requirement in these regulations will not have a significant economic impact on a substantial number of small entities. This certification is based on the fact that these regulations do not have a substantial economic impact because they merely provide guidance about the operation of the tax law in the context of acquisitions of insurance companies and businesses. Moreover, they are expected to apply predominantly to transactions involving larger businesses. In addition, the collection of information requirement merely requires a taxpayer to prepare a written representation that contains minimal information relating to the making of an election. Therefore, a Regulatory Flexibility Analysis under the Regulatory Flexibility Act (5 U.S.C. chapter 6) is not required. Under section 7805(f) of the Code, the notice of proposed rulemaking preceding this regulation was submitted to the Chief Counsel for Advocacy of the Small Business Administration for comment on its impact on small business.

Drafting Information

The principal author of the final regulations is William T. Sullivan, Office of Chief Counsel (Financial Institutions and Products). However, other personnel from the IRS and the Treasury Department participated in the development of these regulations.

List of Subjects

26 CFR Part 1

Income taxes, Reporting and recordkeeping requirements.

26 CFR Part 602

Reporting and recordkeeping requirements.

Adoption of Amendments to the Regulations

■ Accordingly, 26 CFR parts 1 and 602 are amended as follows:

PART 1—INCOME TAXES

■ **Paragraph 1.** The authority citation for part 1 is amended by removing the entries for §§ 1.197–2T, 1.338–1T, and 1.338–11T to read, in part, as follows:

Authority: 26 U.S.C. 7805 * * *

■ **Par. 2.** Section 1.197–0 is amended by:

■ 1. Revising the introductory text and the entries for § 1.197–2(g)(5)(ii).

■ 2. Removing the entries for § 1.197–2T.

The revisions read as follows:

§ 1.197–0 Table of contents.

This section lists the headings that appear in § 1.197–2.

§ 1.197–2 Amortization of goodwill and certain other intangibles.

* * * * *

(g) * * *

(5) * * *

(ii) Determination of adjusted basis of amortizable section 197 intangible resulting from an assumption reinsurance transaction.

(A) In general.

(B) Amount paid or incurred by acquirer (reinsurer) under the assumption reinsurance transaction.

(C) Amount required to be capitalized under section 848 in connection with the transaction.

(*1*) In general.

(*2*) Required capitalization amount.

(*3*) General deductions allocable to the assumption reinsurance transaction.

(*4*) Treatment of a capitalization shortfall allocable to the reinsurance agreement.

(*i*) In general.

(*ii*) Treatment of additional capitalized amounts as the result of an election under § 1.848–2(g)(8).

(*5*) Cross references and special rules.

(D) Examples

(E) Effective/applicability date.

■ **Par. 3.** Section 1.197–2(g)(5)(ii) is revised to read as follows:

§ 1.197–2 Amortization of goodwill and certain other intangibles.

* * * * *

(g) * * *

(5) * * *

(ii) *Determination of adjusted basis of amortizable section 197 intangible resulting from an assumption reinsurance transaction*—(A) *In general.* Section 197(f)(5) determines the basis of an amortizable section 197 intangible for insurance or annuity contracts

acquired in an assumption reinsurance transaction. The basis of such intangible is the excess, if any, of—

(*1*) The amount paid or incurred by the acquirer (reinsurer) under the assumption reinsurance transaction; over

(*2*) The amount, if any, required to be capitalized under section 848 in connection with such transaction.

(B) *Amount paid or incurred by acquirer (reinsurer) under the assumption reinsurance transaction.* The amount paid or incurred by the acquirer (reinsurer) under the assumption reinsurance transaction is—

(*1*) In a deemed asset sale resulting from an election under section 338, the amount of the adjusted grossed-up basis (AGUB) allocable thereto (see §§ 1.338–6 and 1.338–11(b)(2));

(*2*) In an applicable asset acquisition within the meaning of section 1060, the amount of the consideration allocable thereto (see §§ 1.338–6, 1.338–11(b)(2), and 1.1060–1(c)(5)); and

(*3*) In any other transaction, the excess of the increase in the reinsurer's tax reserves resulting from the transaction (computed in accordance with sections 807, 832(b)(4)(B), and 846) over the value of the net assets received from the ceding company in the transaction.

(C) *Amount required to be capitalized under section 848 in connection with the transaction*—(1) *In general.* The amount required to be capitalized under section 848 for specified insurance contracts (as defined in section 848(e)) acquired in an assumption reinsurance transaction is the lesser of—

(*i*) The reinsurer's required capitalization amount for the assumption reinsurance transaction; or

(*ii*) The reinsurer's general deductions (as defined in section 848(c)(2)) allocable to the transaction.

(2) *Required capitalization amount.* The reinsurer determines the required capitalization amount for an assumption reinsurance transaction by multiplying the net positive or net negative consideration for the transaction by the applicable percentage set forth in section 848(c)(1) for the category of specified insurance contracts acquired in the transaction. See § 1.848–2(g)(5). If more than one category of specified insurance contracts is acquired in an assumption reinsurance transaction, the required capitalization amount for each category is determined as if the transfer of the contracts in that category were made under a separate assumption reinsurance transaction. See § 1.848–2(f)(7).

(*3*) *General deductions allocable to the assumption reinsurance transaction.* The reinsurer determines the general deductions allocable to the assumption reinsurance transaction in accordance with the procedure set forth in § 1.848–2(g)(6). Accordingly, the reinsurer must allocate its general deductions to the amount required under section 848(c)(1) on specified insurance contracts that the reinsurer has issued directly before determining the general deductions allocable to the assumption reinsurance transaction. For purposes of allocating its general deductions under § 1.848–2(g)(6), the reinsurer includes premiums received on the acquired specified insurance contracts after the assumption reinsurance transaction in determining the amount required under section 848(c)(1) on specified insurance contracts that the reinsurer has issued directly. If the reinsurer has entered into multiple reinsurance agreements during the taxable year, the reinsurer determines the general deductions allocable to each reinsurance agreement (including the assumption reinsurance transaction) by allocating the general deductions allocable to reinsurance agreements under § 1.848–2(g)(6) to each reinsurance agreement with a positive required capitalization amount.

(*4*) *Treatment of a capitalization shortfall allocable to the reinsurance agreement*—(i) *In general.* The reinsurer determines any capitalization shortfall allocable to the assumption reinsurance transaction in the manner provided in §§ 1.848–2(g)(4) and 1.848–2(g)(7). If the reinsurer has a capitalization shortfall allocable to the assumption reinsurance transaction, the ceding company must reduce the net negative consideration (as determined under § 1.848–2(f)(2)) for the transaction by the amount described in § 1.848–2(g)(3) unless the parties make the election provided in § 1.848–2(g)(8) to determine the amounts capitalized under section 848 in connection with the transaction without regard to the general deductions limitation of section 848(c)(2).

(*ii*) *Treatment of additional capitalized amounts as the result of an election under § 1.848–2(g)(8).* The additional amounts capitalized by the reinsurer as the result of the election under § 1.848–2(g)(8) reduce the adjusted basis of any amortizable section 197 intangible with respect to specified insurance contracts acquired in the assumption reinsurance transaction. If the additional capitalized amounts exceed the adjusted basis of the amortizable section 197 intangible, the reinsurer must reduce its deductions under section 805 or section 832 by the amount of such excess. The additional capitalized amounts are treated as specified policy acquisition expenses attributable to the premiums and other consideration on the assumption reinsurance transaction and are deducted ratably over a 120-month period as provided under section 848(a)(2).

(*5*) *Cross references and special rules.* In general, for rules applicable to the determination of specified policy acquisition expenses, net premiums, and net consideration, see section 848(c) and (d), and § 1.848–2(a) and (f). However, the following special rules apply for purposes of this paragraph (g)(5)(ii)(C)—

(*i*) The amount required to be capitalized under section 848 in connection with the assumption reinsurance transaction cannot be less than zero;

(*ii*) For purposes of determining the company's general deductions under section 848(c)(2) for the taxable year of the assumption reinsurance transaction, the reinsurer takes into account a tentative amortization deduction under section 197(a) as if the entire amount paid or incurred by the reinsurer for the specified insurance contracts were allocated to an amortizable section 197 intangible with respect to insurance contracts acquired in an assumption reinsurance transaction; and

(*iii*) Any reduction of specified policy acquisition expenses pursuant to an election under § 1.848–2(i)(4) (relating to an assumption reinsurance transaction with an insolvent insurance company) is disregarded.

(D) *Examples.* The following examples illustrate the principles of this paragraph (g)(5)(ii):

Example 1. (i) *Facts.* On January 15, 2006, P acquires all of the stock of T, an insurance company, in a qualified stock purchase and makes a section 338 election for T. T issues individual life insurance contracts which are specified insurance contracts as defined in section 848(e)(1). P and new T are calendar year taxpayers. Under §§ 1.338–6 and 1.338–11(b)(2), the amount of AGUB allocated to old T's individual life insurance contracts is $300,000. On the acquisition date, the tax reserves for old T's individual life insurance contracts are $2,000,000. After the acquisition date, new T receives $1,000,000 of net premiums with respect to new and renewal individual life insurance contracts and incurs $100,000 of general deductions under section 848(c)(2) through December 31, 2006. New T engages in no other reinsurance transactions other than the assumption reinsurance transaction treated as occurring by reason of the section 338 election.

(ii) *Analysis.* The transfer of insurance contracts and the assumption of related liabilities deemed to occur by reason of the election under section 338 is treated as an assumption reinsurance transaction. New T determines the adjusted basis under section 197(f)(5) for the life insurance contracts acquired in the assumption reinsurance

transaction as follows. The amount paid or incurred for the individual life insurance contracts is $300,000. To determine the amount required to be capitalized under section 848 in connection with the assumption reinsurance transaction, new T compares the required capitalization amount for the assumption reinsurance transaction with the general deductions allocable to the transaction. The required capitalization amount for the assumption reinsurance transaction is $130,900, which is determined by multiplying the $1,700,000 net positive consideration for the transaction ($2,000,000 reinsurance premium less $300,000 ceding commission) by the applicable percentage under section 848(c)(1) for the acquired individual life insurance contracts (7.7 percent). To determine its general deductions, new T takes into account a tentative amortization deduction under section 197(a) as if the entire amount paid or incurred for old T's individual life insurance contracts ($300,000) were allocable to an amortizable section 197 intangible with respect to insurance contracts acquired in the assumption reinsurance transaction. Accordingly, for the year of the assumption reinsurance transaction, new T is treated as having general deductions under section 848(c)(2) of $120,000 ($100,000 + $300,000/15). Under § 1.848–2(g)(6), these general deductions are first allocated to the $77,000 capitalization requirement for new T's directly written business ($1,000,000 × .077). Thus, $43,000 ($120,000 − $77,000) of the general deductions are allocable to the assumption reinsurance transaction. Because the general deductions allocable to the assumption reinsurance transaction ($43,000) are less than the required capitalization amount for the transaction ($130,900), new T has a capitalization shortfall of $87,900 ($130,900 − $43,000) with regard to the transaction. Under § 1.848–2(g), this capitalization shortfall would cause old T to reduce the net negative consideration taken into account with respect to the assumption reinsurance transaction by $1,141,558 ($87,900 ÷ .077) unless the parties make the election under § 1.848–2(g)(8) to capitalize specified policy acquisition expenses in connection with the assumption reinsurance transaction without regard to the general deductions limitation. If the parties make the election, the amount capitalized by new T under section 848 in connection with the assumption reinsurance transaction would be $130,900. The $130,900 capitalized by new T under section 848 would reduce new T's adjusted basis of the amortizable section 197 intangible with respect to the specified insurance contracts acquired in the assumption reinsurance transaction. Accordingly, new T would have an adjusted basis under section 197(f)(5) with respect to the individual life insurance contracts acquired from old T of $169,100 ($300,000 − $130,900). New T's actual amortization deduction under section 197(a) with respect to the amortizable section 197 intangible for insurance contracts acquired in the assumption reinsurance transaction would be $11,273 ($169,100 ÷ 15).

Example 2. (i) *Facts.* The facts are the same as *Example 1,* except that T only issues accident and health insurance contracts that are qualified long-term care contracts under section 7702B. Under section 7702B(a)(5), T's qualified long-term care insurance contracts are treated as guaranteed renewable accident and health insurance contracts, and, therefore, are considered specified insurance contracts under section 848(e)(1). Under §§ 1.338–6 and 1.338–11(b)(2), the amount of AGUB allocable to T's qualified long-term care insurance contracts is $250,000. The amount of T's tax reserves for the qualified long-term care contracts on the acquisition date is $7,750,000. Following the acquisition, new T receives net premiums of $500,000 with respect to qualified long-term care contracts and incurs general deductions of $75,000 through December 31, 2006.

(ii) *Analysis.* The transfer of insurance contracts and the assumption of related liabilities deemed to occur by reason of the election under section 338 is treated as an assumption reinsurance transaction. New T determines the adjusted basis under section 197(f)(5) for the insurance contracts acquired in the assumption reinsurance transaction as follows. The amount paid or incurred for the insurance contracts is $250,000. To determine the amount required to be capitalized under section 848 in connection with the assumption reinsurance transaction, new T compares the required capitalization amount for the assumption reinsurance transaction with the general deductions allocable to the transaction. The required capitalization amount for the assumption reinsurance transaction is $577,500, which is determined by multiplying the $7,500,000 net positive consideration for the transaction ($7,750,000 reinsurance premium less $250,000 ceding commission) by the applicable percentage under section 848(c)(1) for the acquired insurance contracts (7.7 percent). To determine its general deductions, new T takes into account a tentative amortization deduction under section 197(a) as if the entire amount paid or incurred for old T's insurance contracts ($250,000) were allocable to an amortizable section 197 intangible with respect to insurance contracts acquired in the assumption reinsurance transaction. Accordingly, for the year of the assumption reinsurance transaction, new T is treated as having general deductions under section 848(c)(2) of $91,667 ($75,000 + $250,000/15). Under § 1.848–2(g)(6), these general deductions are first allocated to the $38,500 capitalization requirement for new T's directly written business ($500,000 × .077). Thus, $53,167 ($91,667 − $38,500) of general deductions are allocable to the assumption reinsurance transaction. Because the general deductions allocable to the assumption reinsurance transaction ($53,167) are less than the required capitalization amount for the transaction ($577,500), new T has a capitalization shortfall of $524,333 ($577,500 − $53,167) with regard to the transaction. Under § 1.848–2(g), this capitalization shortfall would cause old T to reduce the net negative consideration taken into account with respect to the assumption reinsurance transaction by $6,809,519 ($524,333 ÷ .077) unless the parties make the election under § 1.848–2(g)(8) to capitalize specified policy acquisition expenses in connection with the assumption reinsurance transaction without regard to the general deductions limitation. If the parties make the election, the amount capitalized by new T under section 848 in connection with the assumption reinsurance transaction would increase from $53,167 to $577,500. Pursuant to paragraph (g)(5)(ii)(C)(*4*) of this section, the additional $524,333 ($577,500 − $53,167) capitalized by new T under section 848 would reduce new T's adjusted basis of the amortizable section 197 intangible with respect to the insurance contracts acquired in the assumption reinsurance transaction. Accordingly, new T's adjusted basis of the section 197 intangible with regard to the insurance contracts is reduced from $196,833 ($250,000 − $53,167) to $0. Because the additional $524,333 capitalized pursuant to the § 1.848–2(g)(8) election exceeds the $196,833 adjusted basis of the section 197 intangible before the reduction, new T is required to reduce its deductions under section 805 by the $327,500 ($524,333 − $196,833).

(E) *Effective/applicability date.* This section applies to acquisitions and dispositions of insurance contracts on or after April 10, 2006.

* * * * *

§ 1.197–2T [Removed]

■ **Par. 4.** Section 1.197–2T is removed.

■ **Par. 5.** Section 1.338–0 is amended by revising the entries for § 1.338–11(d) and (e) to read as follows:

§ 1.338–0 Outline of topics.

* * * * *

§ 1.338–11 Effect of section 338 election on insurance company targets.

* * * * *

(d) Reserve increases by new target after the deemed asset sale.

(1) In general.

(2) Exceptions.

(3) Amount of additional premium.

(i) In general.

(ii) Increases in unpaid loss reserves.

(iii) Increases in other reserves.

(4) Limitation on additional premium.

(5) Treatment of additional premium under section 848.

(6) Examples.

(7) Effective/applicability date.

(i) In general.

(ii) Application to pre-effective date increases to reserves.

(e) Effect of section 338 election on section 846(e) election.

(1) In general.

(2) Revocation of existing section 846(e) election.

* * * * *

■ **Par. 6.** Section 1.338–1 is amended by adding paragraph (b)(2)(vii) to read as follows:

§ 1.338–1 General principles; status of old target and new target.

* * * * *

(b) * * *

(2) * * *

(vii) Section 846(e) (relating to an election to use an insurance company's historical loss payment pattern).

* * * * *

§ 1.338–1T [Removed]

■ **Par. 7.** Section 1.338–1T is removed.

■ **Par. 8.** Section 1.338–11 is amended by revising paragraphs (d) and (e) to read as follows:

§ 1.338–11 Effect of section 338 election on insurance company targets.

* * * * *

(d) *Reserve increases by new target after the deemed asset sale*—(1) *In general.* If in new target's first taxable year or any subsequent year, new target increases its reserves for any acquired contracts, new target is treated as receiving an additional premium, which is computed under paragraph (d)(3) of this section, in the assumption reinsurance transaction described in paragraph (c)(1) of this section. New target includes the additional premium in gross income for the taxable year in which new target increases its reserves for acquired contracts. New target's increase in reserves for the insurance contracts acquired in the deemed asset sale is a liability of new target not originally taken into account in determining AGUB that is subsequently taken into account. Thus, AGUB is increased by the amount of the additional premium included in new target's gross income. See §§ 1.338–5(b)(2)(ii) and 1.338–7. Old target has no deduction under this paragraph (d) and makes no adjustments under §§ 1.338–4(b)(2)(ii) and 1.338–7.

(2) *Exceptions.* New target is not treated as receiving additional premium under paragraph (d)(1) of this section if—

(i) It is under state receivership as of the close of the taxable year for which the increase in reserves occurs; or

(ii) It is required by section 807(f) to spread the reserve increase over the 10 succeeding taxable years.

(3) *Amount of additional premium*—(i) *In general.* The additional premium taken into account under this paragraph (d) is an amount equal to the sum of the positive amounts described in paragraphs (d)(3)(ii) and (d)(3)(iii) of this section. However, the additional premium cannot exceed the limitation described in paragraph (d)(4) of this section.

(ii) *Increases in unpaid loss reserves.* The positive amount with respect to unpaid loss reserves is computed using the formula $A/B \times (C - [D + E])$ where—

(A) A equals old target's discounted unpaid losses (determined under section 846) included in AGUB under paragraph 11(b)(1) of this section;

(B) B equals old target's undiscounted unpaid losses (determined under section 846(b)(1)) as of the close of the acquisition date;

(C) C equals new target's undiscounted unpaid losses (determined under section 846(b)(1)) at the end of the taxable year that are attributable to losses incurred by old target on or before the acquisition date;

(D) D (which may be a negative number) equals old target's undiscounted unpaid losses as of the close of the acquisition date, reduced by the cumulative amount of losses, loss adjustment expenses, and reinsurance premiums paid by new target through the end of the taxable year for losses incurred by old target on or before the acquisition date; and

(E) E equals the amount obtained by dividing the cumulative amount of reserve increases taken into account under this paragraph (d) in prior taxable years by A/B.

(iii) *Increases in other reserves.* The positive amount with respect to reserves other than discounted unpaid loss reserves is the net increase of those reserves due to changes in estimate, methodology, or other assumptions used to compute the reserves (including the adoption by new target of a methodology or assumptions different from those used by old target).

(4) *Limitation on additional premium.* The additional premium taken into account by new target under paragraph (d)(1) of this section is limited to the excess, if any, of—

(i) The fair market value of old target's assets acquired by new target in the deemed asset sale (other than Class VI and Class VII assets); over

(ii) The AGUB allocated to those assets (including increases in AGUB allocated to those assets as the result of reserve increases by new target in prior taxable years).

(5) *Treatment of additional premium under section 848.* If a portion of the positive amounts described in paragraphs (d)(3)(ii) and (iii) of this section are attributable to an increase in reserves for specified insurance contracts (as defined in section 848(e)), new target takes an allocable portion of the additional premium in determining its specified policy acquisition expenses under section 848(c) for the taxable year of the reserve increase.

(6) *Examples.* The following examples illustrate this paragraph (d):

Example 1. (i) *Facts.* On January 1, 2006, P purchases all of the stock of T, a non-life insurance company, for $120 and makes a section 338 election for T. On the acquisition date, old T has total reserve liabilities under state law of $725, consisting of undiscounted unpaid losses of $625 and unearned premiums of $100. Old T's tax reserves on the acquisition date are $580, which consist of discounted unpaid losses (as defined in section 846) of $500 and unearned premiums (as computed under section 832(b)(4)(B)) of $80. Old T has Class I through Class V assets with a fair market value of $800. Old T also has a Class VI asset with a fair market value of $75, consisting of the future profit stream of certain insurance contracts. During 2006, new T makes loss and loss adjustment expense payments of $200 with respect to the unpaid losses incurred by old T before the acquisition date. As of December 31, 2006, new T reports undiscounted unpaid losses of $475 attributable to losses incurred before the acquisition date. The related amount of discounted unpaid losses (as defined in section 846) for those losses is $390.

(ii) *Computation and allocation of AGUB.* Under § 1.338–5 and paragraph (b)(1) of this section, as of the acquisition date, AGUB is $700, reflecting the sum of the amount paid for old T's stock ($120) and the tax reserves assumed by new T in the transaction ($580). The fair market value of old T's Class I through V assets is $800, whereas the AGUB available for such assets under § 1.338–6 is $700. There is no AGUB available for old T's Class VI assets, even though such assets have a fair market value of $75 on the acquisition date.

(iii) *Adjustments for increases in reserves for unpaid losses.* Under paragraph (d) of this section, new T must determine whether there are any amounts by which it increased its unpaid loss reserves that will be treated as an additional premium and an increase in AGUB. New T applies the formula of paragraph (d)(3) of this section, where A equals $500, B equals $625, C equals $475, D equals $425 ($625 − $200), and E equals $0. Under this formula, new T is treated as having increased its reserves for discounted unpaid losses attributable to losses incurred by old T by $40 ($500/$625 × ($475 − [$425 + 0]). The limitation under paragraph (d)(5) of this section based on the difference between the fair market value of old T's Class I through Class V assets and the AGUB allocated to such assets is $100. Accordingly, new T includes an additional premium of $40 in gross income for 2006, and increases the AGUB allocated to old T's Class I through Class V assets to reflect this additional premium.

Example 2. (i) *Facts.* Assume the same facts as in *Example 1.* Further assume that during 2007 new T deducts total loss and loss expense payments of $375 with respect to losses incurred by old T before the acquisition date. On December 31, 2007, new T reports undiscounted unpaid losses of $150 with respect to losses incurred before the acquisition date. The related amount of discounted unpaid losses (as defined in section 846) for those unpaid losses is $125.

(ii) *Analysis.* New T must determine whether any amounts by which it increased its unpaid losses during 2007 will be treated as an additional premium in paragraph (d)(3)

of this section. New T applies the formula under paragraph (d)(3) of this section, where A equals $500, B equals $625, C equals $150, D equals $50 ($625 − $575), and E equals $50 ($40 divided by .8). In paragraph (d)(3) of this section, new T is treated as increasing its reserves for discounted unpaid losses by $40 during 2007 with respect to losses incurred by old T ($500/$625 × ($150 − [$50 + $50]). New T determines the limitation of paragraph (d)(5) of this section by comparing the $800 fair market value of the Class I through V assets on the acquisition date to the $740 AGUB allocated to such assets (which includes the $40 addition to AGUB included during 2006). Thus, new T recognizes $40 of additional premium as a result of the increase in reserves during 2007, and adjusts the AGUB allocable to the Class I through V assets acquired from old T to reflect such additional premium.

Example 3. (i) *Facts.* The facts are the same as *Example 2*, except that on January 1, 2008, new T reinsures the outstanding liability with respect to losses incurred by old T before the acquisition date through a portfolio reinsurance transaction with R, another non-life insurance company. R agrees to assume any remaining liability relating to losses incurred by old T before the acquisition date in exchange for a reinsurance premium of $200. Accordingly, as of December 31, 2008, new T reports no undiscounted unpaid losses with respect to losses incurred by old T before the acquisition date.

(ii) *Analysis.* New T must determine whether any amount by which it increased its unpaid loss reserves will be treated as an additional premium under paragraph (d) of this section. New T applies the formula of paragraph (d)(3) of this section, where A equals $500, B equals $625, C equals $0, and D equals −$150 ($625 − ($575 + $200), and E equals $100 ($80 divided by .8). Thus, new T is treated as having increased its discounted unpaid losses by $40 in 2008 with respect to losses incurred by old T before the acquisition date ($500/$625 × (0 − [−$150 + $100]). New T includes this positive amount in gross income, subject to the limitation of paragraph (d)(4) of this section. The limitation of paragraph (d)(4) of this section equals $20, which is computed by comparing the $800 fair market value of the Class I through V assets acquired from old T with the $780 AGUB allocated to such assets (which includes the $40 addition to AGUB in 2006 and the $40 addition to AGUB in 2007). Thus, New T includes $20 in additional premium, and increases the AGUB allocated to the Class I through V assets acquired from old T by $20. As a result of these adjustments, the limitation under paragraph (d)(4) of this section is reduced to zero.

(7) *Effective/applicability date*—(i) *In general.* This section applies to increases to reserves made by new target after a deemed asset sale occurring on or after April 10, 2006.

(ii) *Application to pre-effective date increases to reserves.* If either new target makes an election under § 1.338(i)–1(c)(2) or old target makes an election under § 1.338(i)–1(c)(3) to apply the rules of this section, in whole, to a qualified stock purchase occurring before April 10, 2006, then the rules contained in this section shall apply in whole to the qualified stock purchase.

(e) *Effect of section 338 election on section 846(e) election*—(1) *In general.* New target and old target are treated as the same corporation for purposes of an election by old target to use its historical loss payment pattern under section 846(e). See § 1.338–1(b)(2)(vii). Therefore, if old target has a section 846(e) election in effect on the acquisition date, new target will continue to use the historical loss payment pattern of old target to discount unpaid losses incurred in accident years covered by the election, unless new target elects to revoke the section 846(e) election. In addition, new target may consider old target's historical loss payment pattern when determining whether to make the section 846(e) election for a determination year that includes or is subsequent to the acquisition date.

(2) *Revocation of existing section 846(e) election.* New target may revoke old target's section 846(e) election to use its historical loss payment pattern to discount unpaid losses. If new target elects to revoke old target's section 846(e) election, new target will use the industry-wide patterns determined by the Secretary to discount unpaid losses incurred in accident years beginning on or after the acquisition date through the subsequent determination year. New target may revoke old target's section 846(e) election by attaching a statement to new target's original tax return for its first taxable year.

* * * * *

§ 1.338–11T [Removed]

■ **Par. 9.** Section 1.338–11T is removed.

■ **Par. 10.** Section 1.338(i)–1 is amended by:

■ 1. Revising the section heading to read as set forth below.

■ 2. Redesignating paragraph (c)(2)(ii)(*b*) as paragraph (c)(2)(ii)(B).

The revisions read as follows:

§ 1.338(i)–1 Effective/applicability date.

* * * * *

■ **Par. 11.** Section 1.381(c)(22)–1(b)(7)(v) is amended by revising the last sentence of *Example 3* to read as follows:

§ 1.381(c)(22)–1 Successor life insurance company.

* * * * *

(b) * * *

(7) * * *

(v) * * *

Example 3. * * * In that case, in the taxable year of the indemnity reinsurance transaction, S takes into account as ordinary income the portion of the old T's accounts ($1) that old T or S has not previously taken into account as income.

* * * * *

§ 1.846–0 [Amended]

■ **Par. 12.** Section 1.846–0 is amended by removing the entries for §§ 1.846–2T and 1.846–4T.

■ **Par. 13.** Section 1.846–2(d) is revised to read as follows:

§ 1.846–2 Election by taxpayer to use its own historical loss payment pattern.

* * * * *

(d) *Effect of section 338 election on section 846(e) election.* For rules regarding qualified stock purchase occurring on or after April 10, 2006, see §§ 1.338–1(b)(2)(vii) and 1.338–11(e).

■ **Par. 14.** Section 1.846–4 is amended by revising the section heading and paragraph (b) to read as follows:

§ 1.846–4 Effective/applicability date.

* * * * *

(b) *Section 338 election.* Section 1.846–2(d) applies to section 846(e) elections made with regard to a qualified stock purchase made on or after April 10, 2006.

■ **Par. 15.** For each entry in the ''Section'' column remove the phrase in the ''Remove'' column and add the phrase in the ''Add'' column in its place.

Section	Remove	Add
§ 1.338(i)–1(c)(2)(i)	§§ 1.338–11 and 1.338–11T(d)	§ 1.338–11
§ 1.338(i)–1(c)(2)(i)	1.197–2T(g)(5)(ii),	
§ 1.338(i)–1(c)(2)(ii)	§§ 1.338–11 and 1.338–11T(d)	§ 1.338–11
§ 1.338(i)–1(c)(2)(ii)	1.197–2T(g)(5)(ii),	
§ 1.338(i)–1(c)(2)(ii)(B) (First sentence)	§§ 1.338–11 and 1.338–11T(d)	§ 1.338–11
§ 1.338(i)–1(c)(2)(ii)(B) (First sentence)	1.197–2T(g)(5)(ii),	

Section	Remove	Add
§ 1.338(i)–1(c)(2)(ii)(B) (Second sentence)	§§ 1.338–11 and 1.338–11T(d)	§ 1.338–11
§ 1.338(i)–1(c)(2)(ii)(B) (Second sentence)	1.197–2T(g)(5)(ii),	
§ 1.338(i)–1(c)(3)(i)	§§ 1.338–11 and 1.338–11T(d)	§ 1.338–11
§ 1.338(i)–1(c)(3)(i)	1.197–2T(g)(5)(ii),	
§ 1.338(i)–1(c)(3)(ii)	§§ 1.338–11 and1.338–11T(d)	§ 1.338–11
§ 1.338(i)–1(c)(3)(ii)	1.197–2T(g)(5)(ii),	
§ 1.338(i)–1(c)(3)(ii)(B) (First sentence)	§§ 1.338–11 and 1.338–11T(d)	§ 1.338–11
§ 1.338(i)–1(c)(3)(ii)(B) (First sentence)	1.197–2T(g)(5)(ii),	
§ 1.338(i)–1(c)(3)(ii)(B) (Second sentence)	§§ 1.338–11 and 1.338–11T(d)	§ 1.338–11
§ 1.338(i)–1(c)(3)(ii)(B) (Second sentence)	1.197–2T(g)(5)(ii),	
§ 1.1060–1(a)(2)(i)	§§ 1.338–11 and 1.338–11T(d)	§ 1.338–11
§ 1.1060–1(a)(2)(i)	1.197–2T(g)(5)(ii),	
§ 1.1060–1(a)(2)(ii)	§§ 1.338–11 and 1.338–11T(d)	§ 1.338–11
§ 1.1060–1(a)(2)(ii)	1.197–2T(g)(5)(ii),	
§ 1.1060–1(a)(2)(ii)(B)	§§ 1.338–11 and 1.338–11T(d)	§ 1.338–11
§ 1.1060–1(a)(2)(ii)(B)	1.197–2T(g)(5)(ii),	
§ 1.1060–1(a)(2)(iii)	§§ 1.338–11T(d) and 1.338–11T(d)	§ 1.338–11(d)
§ 1.1060–1(a)(2)(iii)	1.197–2T(g)(5)(ii),	
§ 1.1060–1(a)(2)(iii)(B)	§§ 1.338–11 and 1.338–11T(d)	§ 1.338–11
§ 1.1060–1(a)(2)(iii)(B)	1.197–2T(g)(5)(ii),	

PART 602—OMB CONTROL NUMBERS UNDER PAPERWORK REDUCTION ACT

■ **Par. 16.** The authority citation for part 602 continues to read as follows:

Authority: 26 U.S.C. 7805.

■ **Par. 17.** In § 602.101, paragraph (b) is amended by removing the entry for § 1.338–11T from the table and adding an entry to the table in numerical order to read as follows:

§ 602.101 OMB Control numbers.

* * * * *

(b) * * *

CFR part or section where identified and described	Current OMB control No.
* * * * *	
1.338–11	1545–1990
* * * * *	

Linda Stiff,

Deputy Commissioner for Services and Enforcement.

Approved: January 9, 2008.

Eric Solomon,

Assistant Secretary of the Treasury (Tax Policy).

[FR Doc. E8–729 Filed 1–22–08; 8:45 am]

BILLING CODE 4830–01–P

DEPARTMENT OF HEALTH AND HUMAN SERVICES

42 CFR PART 72

RIN 0920–AA19

Interstate Shipment of Etiologic Agents

AGENCY: Centers for Disease Control and Prevention (CDC), HHS.

ACTION: Final rule.

SUMMARY: HHS is removing Part 72 of Title 42, Code of Federal Regulations, which governs the interstate shipment of etiologic agents, because the U.S. Department of Transportation (DOT) already has in effect a more comprehensive set of regulations applicable to the transport in commerce of infectious substances. DOT harmonizes its transport requirements with international standards adopted by the United Nations (UN) Committee of Experts on the Transport of Dangerous Goods for the classification, packaging, and transport of infectious substances. Rescinding the rule eliminates duplication of the more current DOT regulations that cover intrastate and international, as well as interstate, transport. HHS replaced those sections of Part 72 that deal with select biological agents and toxins with a new set of regulations found in Part 73 of Title 42. Removal of Part 72 alleviates confusion and reduces the regulatory burden with no anticipated adverse impact on public health and safety.

DATES: *Effective Date:* This final rule is effective 30 days after publication in the **Federal Register**.

FOR FURTHER INFORMATION CONTACT: Dr. Janet K. Nicholson, National Center for Infectious Diseases/OD, Centers for Disease Control and Prevention, U.S. Department of Health and Human Services, 1600 Clifton Rd., NE (MS–D10), Atlanta, GA 30333; *telephone:* 404–639–2100; e-mail *jkn1@cdc.gov.*

SUPPLEMENTARY INFORMATION: On January 3, 2007, HHS published a notice of proposed rulemaking (NPRM) to remove Part 72 of Title 42 of the Code of Federal Regulations. The comment period for the proposed rule closed on March 5, 2007. HHS received no comments on the proposed rule.

With minor modification for clarification, this supplementary information is the same as was in the NPRM.

Part 72 (being removed by this final rule) provides minimal requirements for packaging and shipping materials, including diagnostic specimens and biological products, reasonably believed to contain an etiologic agent. It provides more detailed requirements, including labeling, for materials containing certain etiologic agents, with a list of the biological agents and toxins provided. For agents on the list, the rule requires reporting to HHS/CDC damaged packages and packages not received. The rule also requires sending certain agents on the list by registered mail or an equivalent system.

42 CFR 72, as currently promulgated, is out-of-date, and duplicates more current regulations of DOT. Further, the regulation is inconsistent with the procedures of other transport governing bodies, such as the International Civil Aviation Organization (ICAO) and the International Air Transport Association (IATA), for air, and the U.S. Postal Service for ground.

Section 72.6, a major portion of 42 CFR 72 that dealt with transporting select agents, was superseded by the

issuance of an Interim Final Rule for 42 CFR part 73 on December 13, 2002 (67 FR 76886). Part 73 implements provisions of the Public Health Security and Bioterrorism Preparedness and Response Act of 2002 for transporting select agents.

The continued existence of the remaining provisions of the out-of-date HHS/CDC regulation is confusing to the packaging and transport communities. The provisions serve no useful purpose that merits their retention. HHS/CDC will remain available for consultation on and response to public-health issues and emergencies, in accordance with its normal duties in the interest of public health and safety.

Transition From HHS to DOT Regulations

DOT has the primary statutory authority to regulate the safe and secure transportation of all hazardous materials, including infectious materials, shipped in intrastate, interstate, and foreign commerce. The etiologic agents covered by 42 CFR part 72 are considered to be hazardous materials, and, in practice, the DOT regulations, 49 CFR 171–180, have superseded 42 CFR part 72 since DOT began including more specific regulations on infectious substances. The earlier versions of the DOT regulations on etiologic agents were based on and virtually identical to the HHS regulations. These regulations have been modified over time, as necessary, to continue to provide protection for persons who handle shipments with as few impediments as possible to quick shipment. In 1990, DOT authorized the term ''infectious substance'' as synonymous with ''etiologic agent.'' In 1991, DOT expanded the definition of ''etiologic agent'' to include agents listed in 42 CFR part 72, plus others that cause or could cause severe, disabling or fatal human disease, thereby including agents such as human immunodeficiency virus that were not on the HHS list. DOT also issued expanded packaging requirements at that same time. In 1994 and 1995, DOT worked with other Federal agencies (including HHS/CDC, the HHS/Food and Drug Administration, the Occupational Safety and Health Administration, and the Environmental Protection Agency) to minimize differences between the DOT regulations and other Federal regulations on regulated medical waste, and to ease compliance and eliminate gaps to assure safety.

United Nations Recommendations and Model Regulations

The United Nations (UN) publishes its Recommendations on the Transport of Dangerous Goods and Model Regulations, here described as the ''UN Model Regulations'' or ''model regulations,'' on a biennial basis. The model regulations are developed by the Committee of Experts on the Transport of Dangerous Goods of the UN Economic and Social Council. Although regulations for transporting infectious substances have existed in all of the editions of the UN Model Regulations, those for infectious medical waste were first adopted in December 1996, in the 10th Revised Edition. The purpose of the Model Regulations is to present a basic scheme of provisions that will allow uniform development of national and international regulations that govern the various modes of transport, thereby facilitating worldwide harmonization.

In 1997, the World Health Organization (WHO) published ''Guidelines for the Safe Transport of Infectious Substances and Diagnostic Specimens,'' prepared by the Directors of WHO Collaborating Centers for Biosafety and other advisers to provide practical guidance to facilitate compliance with international standards.

HHS/CDC has a WHO Collaborating Center for Biosafety and Training, and has provided consultation to the WHO Secretariat and to the Committee of Experts on infectious-substance issues and the development of the UN Model Regulations.

DOT has also worked with the Committee of Experts, and over time has harmonized the DOT regulations with the UN Model Regulations.

In October 2001, the WHO convened a meeting, which included infectious-disease and biosafety experts, to consider guidance needed for the safe transport of infectious substances, and to identify the infectious substances that need to be subject to transport regulation. The meeting developed a consensus document and presented it to the UN Committee of Experts. Subsequent deliberations resulted in development and publication of revised requirements for transporting of infectious substances in the 13th Revised Edition of the UN Model Regulations in 2004.

These model regulations recommended a new classification scheme of categories A and B, based on risk during transport, instead of risk that occurs primarily in the laboratory. The WHO and the Committee of Experts assessed the risk of infection by pathogens in the transport setting and, with review by HHS/CDC and other public-health experts and scientists, refined the list of Category A agents of concern. This list is not exhaustive. Category A includes ''an infectious substance which is transported in a form that, when exposure to it occurs, is capable of causing permanent disability, life-threatening or fatal disease to humans or animals.'' Category B includes ''an infectious substance which does not meet the criteria for inclusion in Category A.'' Packaging requirements were clarified and simplified for each category.

The ''Infectious Substances'' portion of the 14th Revised Edition of the UN Model Regulations, adopted in December 2004 and published in 2005, is very similar to the 13th Edition. The new edition adds a definition for ''patient specimens''; adds ''cultures only'' to several microorganisms on the infectious-substances list for Category A; clarifies shipping names and labeling; and clarifies exemptions from regulations.

In September 2005, the WHO Secretariat published ''Guidance on Regulations for the Transport of Infectious Agents'' (WHO/CDS/CSR/LYO/2005.22) which combined into one document the component parts of the 13th and 14th Revised Editions of the UN Model Regulations.

Harmonization of DOT Regulations With UN/WHO Publications

The DOT Notice of Proposed Rulemaking (NPRM), published on January 22, 2001 (66 FR 6941), for public comment, and the final rule, published on August 14, 2002 (67 FR 53118), which became effective on October 1, 2002, revised definitions and adopted packaging requirements consistent with international standards. The DOT final rule incorporated new classification criteria (WHO Risk Groups 1–4 at that time) for infectious substances, diagnostic specimens, biological products, genetically modified organisms and microorganisms, and medical wastes—consistent with the 12th Revision of the UN Model Regulations of 2001. Among other changes, the final rule revised packaging requirements for toxic and infectious substances consistent with the international performance standards. HHS/CDC and other relevant Federal agencies reviewed the DOT proposals before final publication.

The DOT Notice of Proposed Rulemaking (NPRM), published on May 19, 2005 (70 FR 29170), further harmonized the DOT regulations with

the 13th and 14th Revised Editions of the UN Model Regulations. DOT developed a final rule after consideration of comments received from the public, including the affected commercial, research, public-health, medical, and transport communities, and after discussion with other relevant Federal regulating authorities. The final rule was published on June 2, 2006 (71 FR 32244) and became effective on October 1, 2006.

The DOT final rule is almost entirely consistent with the UN Model Regulations. One non-substantive difference is that the final rule retains the definition of ''biological products'' that is more consistent with the definition used by HHS/FDA and other Federal agencies.

Specimens With Low Likelihood of Pathogens

The DOT final rule also exempts from regulation human and animal specimens for which there is minimal likelihood that pathogens are present. The UN Model Regulations recommend exemption if the specimen is transported in a package (three components) that will prevent any leakage; is of adequate strength for its capacity, mass, and intended use; and is marked as an exempt specimen. The DOT regulations do not specify any packaging requirement for these specimens with minimal likelihood that pathogens are present.

The requirement for triple packaging for these specimens, however, is included in the requirements issued by other transport-governing organizations. For example, the U.S. Postal Service Domestic Mail Manual (DMM) requires special packaging (not subject to performance requirements it prescribes for infectious substances) for liquid diagnostic specimens that would not meet the current definitions for a Category A or B infectious substance. This packaging is consistent with the packaging recommended in the UN Model Regulations, except that for specimens that do not exceed 50 ml. the second leak-proof container may serve as the shipping container if it has enough strength to withstand ordinary postal processing. The ICAO Technical Instructions (ICAO TI) govern virtually all shipments transported internationally by air, and the majority of U.S. domestic air shipments. Addendum No. 2 to ICAO TI (Doc. 9284), issued on June 30, 2005, includes almost verbatim the language from the UN Model Regulations regarding exempt specimens, except that the UN made recommendations for packaging and the ICAO TI requires the packaging specifications. IATA does the same in Addendum III, posted on July 5, 2005, to the 46th Edition of IATA Dangerous Goods Regulations. Inclusion of the triple-packaging provision by these organizations covers virtually all shipment in commerce of routine patient specimens and biological products for which there is little likelihood of containing an infectious substance.

Section by Section—Comments on Removal

HHS provides a section-by-section rationale for removing the remaining portions of 42 CFR 72.

Section 72.1 Definitions

Current definitions consistent with UN/WHO recommendations are provided in the DOT rule that applies to intra-state and international as well as interstate transport in commerce.

Section 72.2 Transportation of Diagnostic Specimens, Biological Products, and Other Materials; Minimum Packaging Requirements

Section 72.2 provides that diagnostic specimens and biologic products which the shipper ''reasonably believes may contain an etiologic agent'' must be ''packaged to withstand leakage of contents, shocks, pressure changes, and other conditions incident to ordinary handling in transportation.'' The detailed DOT packaging requirements for Categories A and B have superseded this very general requirement. The term ''infectious substance'' has replaced ''etiologic agent'' in the UN Model Regulations, and in the DOT and other applicable regulations. Those regulations define ''infectious substance'' as a ''material known or reasonably expected to contain a pathogen.''

The DOT regulations define pathogens into two categories. Category A is an ''infectious substance in a form that is capable of causing permanent disability or life-threatening or fatal disease in otherwise healthy humans or animals when exposure to it occurs.'' Category B is an infectious substance that does not meet the criteria for Category A. The DOT final rule exempts a ''material that has a low probability of containing an infectious substance, or where the concentration of the infectious substance is at a level naturally occurring in the environment so it cannot cause disease when exposure to it occurs.'' As stated above, leak-proof packaging of adequate strength is required for these materials by the U.S. Postal Service, ICAO, and IATA. The DOT final rule provides for classifying and shipping as a Category A or B a biological product ''known or reasonably expected'' to contain a pathogen that meets the criteria for either category, thereby covering, when transported in commerce, those same substances covered by the original intent of section 72.2.

Further, the HHS rule covered the substances only in transport from one State to another or from one State through another State and back to the State of origin. The DOT regulations cover transport in commerce within State, and in international commerce, as well as from State-to-State.

Section 72.3 Transportation of Materials Containing Certain Etiologic Agents; Minimum Packaging Requirements

This section provided a list of specific agents that cannot be shipped in interstate traffic, unless packaged, labeled, and shipped in accordance with the requirements specified in the section. Neither the list of agents, nor the packaging, labeling, and shipping requirements, have been kept up-to-date, and have now become outdated because of the extensive process undertaken biennially by the UN Committee of Experts on the Transport of Dangerous Goods and the harmonization of the DOT regulations with the resultant UN Model Regulations and the WHO ''Guidance on the Transport of Infectious Substances.'' The HHS/CDC WHO Collaborating Center for Biosafety was a partner in that effort.

The indicative list included in the preamble of the June 2, 2006, DOT final rule differs from the list in the UN Model Regulations in the 14th Revised Edition in only two instances. The DOT list does not include hepatitis B virus (cultures only), and it includes ''and other lyssaviruses'' as part of the rabies listing. All microorganisms on the DOT list, and other infectious substances that meet the criteria for Category A, are to be packaged and shipped as Category A infectious substances.

A comprehensive discussion of the new method of categorizing substances as Category A or B for purposes of transportation can be found in the previously referenced DOT final rule entitled ''Hazardous Materials: Infectious Substances; Harmonization with the United Nations Recommendations; Final Rule'' (71 FR 32244, June 2, 2006). HHS/CDC encourages all interested persons to read the DOT final rule for a more comprehensive understanding of the new method of categorizing and defining a Category A material, and to

review the substances it lists in its preamble that meet the Category A definition. The DOT included this list as a guide (not all-inclusive) of infectious substances the WHO and HHS determined are examples of Category A agents.

In brief, the UN Committee of Experts on the Transport of Dangerous Goods, with the input of HHS/CDC, the WHO Secretariat, and others, developed a classification scheme more suited for the risks inherent in transport as opposed to risks in the laboratory. The previous system of four risk groups, with ''4'' as the highest risk, was developed primarily to protect workers in the laboratory environment. The new Category A includes an infectious substance transported in a form that is capable of causing permanent disability or life-threatening or fatal disease to otherwise healthy humans or animals when exposure to it occurs. It includes substances previously categorized in Risk Group 4 and some in Risk Groups 2 and 3. Category B includes infectious substances (diagnostic or clinical specimens) that do not meet the criteria for Category A.

HHS also encourages the public to review the current packaging requirements provided in the 2006 DOT final rule cited above, as well as those published in the DOT's final rule entitled ''Revisions to Standards for Infectious Substances'' published in the **Federal Register** (67 FR 53118, August 14, 2002). The requirements are consistent with the requirements adopted by the UN, and have been refined over time to be more specific than the older HHS requirements, with some liquid-volume changes from those specified in 72.2(a) and (b). Another example of refinement is that the DOT regulations require the outer packaging to release carbon dioxide gas when dry ice (72.2(c)) is used, while maintaining structural integrity of the package.

72.3(d) describes a label that is required on the outer shipping container for etiologic agents transported in interstate traffic. The UN Model Regulations have also described a label that can be recognized for transport of these agents anywhere in the world. With harmonization of the DOT regulations with the international regulations, the label required in this section of the HHS regulation is duplicative, and no longer necessary.

72.3(e) required reporting of damaged packages to HHS. The label mentioned above included the statement: ''In case of damage or leakage, notify Director CDC,'' and a telephone number was provided. Reporting over the years has been sporadic, and has served little direct purpose. The attention to the importance of preventing leakage and preventing exposure has resulted in the benefit that most carriers have cleanup procedures in place, and most reports are made after the persons involved have followed the company procedures for cleanup. Having procedures in place, such as the U.S. Postal Service has, is preferable to relying on a call to HHS to obtain directions. Moreover, the DOT regulations (at 49 CFR 171.15 and 171.16) require carriers to report transportation incidents that involve infectious substances. Immediate reporting by telephone is required for incidents where fire, breakage, spillage, or suspected contamination occurs that involves the shipment of infectious substances (see 49 CFR 171.15(a) (3)). In addition, a written report is required for any unintentional release of hazardous materials from a packaging during transportation; including those covered under 49 CFR 171.15 (see 49 CFR 171.16(a)). Additional reporting of incidents to HHS is redundant and unnecessary. The DOT regulations permit a carrier to provide telephoned incident reports to HHS instead of DOT. For consistency, we will ask the DOT to consider amending this provision of its regulations after rescission of Part 72.

DOT regulations require packages that contain infectious substances to be labeled to indicate the infectious hazard (see 49 CFR 172.434 for a depiction of the required label). The label currently includes this statement: ''In case of damage or leakage immediately notify public health authority. In USA, notify Director—CDC; Atlanta, GA; 1–800–232–0124.'' We will also ask the DOT to consider revising the INFECTIOUS SUBSTANCE label after rescission of Part 72.

The WHO ''Guidance on Regulations for the Transport of Infectious Substances,'' September 2005, provides specific recommended procedures for spill cleanup. This Guidance is available to the agencies that govern land, vessel, and air shipments. The recommended procedures reflect those contained in the WHO Laboratory Biosafety Manual, Third Edition, 2004. As discussed below, the DOT regulations provide criteria for incident reporting. The HHS regulation requires reporting of ''damaged packages'' without additional criteria for reporting. Nothing will be lost by withdrawing this requirement for immediate and routine reporting of damaged packages.

Although routine reporting to HHS will not be required by regulation after the effective date of this final rule to remove Part 72, HHS will remain available for consultation on and in response to public-health issues and emergencies, in accordance with its normal duties in the interest of public health and safety. As part of this support, HHS will maintain the current reporting telephone number on a 7 day/24 hour basis in order to assist DOT with the management of suspected exposures.

HHS/CDC and the HHS/National Institutes of Health revised the manual ''Biosafety in Microbiological and Biomedical Laboratories'' in 2007. Although Annex B of this 5th Edition is concerned with decontamination and disinfection primarily in the laboratory environment, it could be useful to organizations responsible for transporting packages. Having clean-up procedures in place is the most important element of response to a damaged package. The WHO publishes a ''Laboratory Biosafety Manual'' that includes a simpler list of procedures for spill clean-up in the section on transport of infectious substances.

72.3(f) Registered mail or an equivalent system. This section lists several agents that are required to be shipped by registered mail or an equivalent system, with required notification of receipt. All but one of these agents (Histoplasma capsulatum) is included on the list of select agents and toxins covered by 42 CFR part 73. 42 CFR part 73 establishes more strict requirements for transfer of these agents. The sender and recipient must have a certificate of registration for the agent. A form is submitted to HHS for approval of the transfer. Packaging and shipping must comply with all applicable requirements for Category A agents, including those of the DOT. The recipient must notify the sender and HHS of receipt within 2 business days or of non-receipt within 48 hours after expected time of receipt. As a result of these requirements, the requirement for registered mail for these agents is no longer applicable.

Section 72.4 Notice of Delivery; Failure To Receive

This section required notification of the Director of HHS of non-delivery within five days of expected delivery of the select agents or toxins listed in 72.3(f). As stated above, 42 CFR part 73 provides more strict notification requirements for these agents. Notification is required of non-delivery within 48 hours of expected delivery time; also submission of a form confirming receipt is required within two business days of receipt of a select agent or toxin.

The amendment published on March 18, 2005 (70 FR 13316), which

conformed this section to the new 42 CFR part 73, is no longer necessary, and is removed.

Section 72.5 Requirements; Variations

This section allowed the Director of HHS to approve variations in requirements if protection remains equivalent. No variations have been approved that DOT has not also approved. Removal of the rule eliminates the basis of necessity for the Director of HHS to have such authority.

Section 72.6 Additional Requirements for Facilities Transferring or Receiving Select Agents

This entire section, 72.6(a)–(j), was replaced or amended by publication by HHS in the **Federal Register** of 42 CFR part 73, ''Possession, Use, and Transfer of Select Agents and Toxins,'' as Interim Final Rules on December 13, 2002 (67 FR 76886), and November 3, 2003 (68 FR 62245), and as a Final Rule on March 18, 2005 (70 CFR 13294), with an effective date of April 18, 2005.

These rulemakings also replaced the list of agents at ''Appendix A to Part 72—Select Agents,'' as well as the ''Exemptions'' section following the Appendix.

The amendments published on March 18, 2005 (70 FR 13316), which conformed section 72.6(h) and Appendix A to 42 CFR 73, are no longer needed, and are removed by this final rule.

Section 72.7 Penalties

Penalties were specified for violations of this part, with stronger penalties for violations related to select agents. Similar penalties for violations of provisions of part 73 related to select agents have been specified by revision to 42 CFR Part 1003—Civil Money Penalties, Assessments and Exclusions. The DOT regulations provide for penalty for non-compliance, as do ICAO and other entities with instructions or regulations regarding transport of infectious substances.

Authority

The HHS regulation of the interstate transfer of etiologic agents is based on the general authority found in Section 264 of Title 42, United States Code, Regulations to Control Communicable Diseases, in Part G, Quarantine and Inspection. The HHS considers the intrastate, interstate, and international regulations of the DOT and UN Model Regulations for transporting infectious substances to include the majority of the HHS's etiologic agents covered under its authority.

Regulatory Analysis

Rescinding Part 72 reduces the regulatory burden on affected entities. The DOT Hazardous Materials Transportation regulations and the HHS Select Agent regulations already apply, and shippers are following them. DOT and HHS have completed the required analyses for rules that supersede the rule being removed, and which are already in effect. Eliminating this Federal regulation is beneficial to the regulated community by alleviating confusion and duplication.

HHS does not anticipate the removal to have any impact on other Federal programs involved in transport of materials that are reasonably believed to contain infectious substances, such as the HHS/CDC Import Permit Program; the HHS/CDC Clinical Laboratories Improvement Program; the HHS/CDC Select Agent Program; and various research programs of HHS/NIH and HHS/FDA and other Agencies. Agencies will need to review and update references in their guidance and regulating documents to reflect changes brought about by this final rule.

Paperwork Reduction Act

This final rule does not impose any new information-collection requirements, and does not invoke any issues that make it subject to the Paperwork Reduction Act.

The only impact of removal of 42 CFR part 72 is to reduce burden. It eliminates specification for a second label to be attached to the outer shipping container. This label is no longer needed since it duplicates the label recommended by the UN Model Regulations, and adopted by DOT and other organizations (such as ICAO, IATA, and the U.S. Postal Service) that govern shipments of infectious substances.

Impact of paperwork previously involved with sections that dealt with notice of delivery or failure to receive (72.4) is insignificant because HHS has rarely received such paperwork.

Consequently, the removal of 42 CFR part 72 will eliminate the need for the duplicative labeling requirements and the collection of data associated with the notice of delivery or failure to receive packages. However, the removal of 42 CFR 72 does not eliminate the provisions set forth in Subpart F (Importations) of the Foreign Quarantine Regulations (42 CFR part 71), which contains provisions for importation of etiologic agents, hosts, and vectors (See 42 CFR 71.54). Specifically, this provision requires persons that import or distribute after importation these materials to obtain a permit issued by the CDC (OMB Control Number 0920–0199).

Executive Order 12866 and Regulatory Flexibility Act

Executive Order 12866

Executive Order 12866 directs agencies to assess all costs and benefits of available regulatory alternatives and, when regulation is necessary, to select regulatory approaches that maximize net benefits (including potential economic, environmental, public health and safety, and other advantages; distributive impacts; and equity). The Executive Order classifies a ''significant regulatory action,'' requiring review by the Office of Management and Budget unless OMB waives such review, as any regulatory action that is likely to result in a rule that may: (1) Have an annual effect on the economy of $100 million or more or adversely affect in a material way the economy, a sector of the economy, productivity, competition, jobs, the environment, public health or safety, or State, local, or tribal governments or communities; (2) Create a serious inconsistency or interfere with an action taken or planned by another agency; (3) Materially alter the budgetary impact of entitlements, grants, user fees, or loan programs or the rights and obligations of recipients thereof; or (4) Raise novel legal or policy issues arising out of legal mandates, the President's priorities, or the principles set forth in the Executive Order.

The economic, interagency, budgetary, legal, and policy implications of this final rule have been examined, and the regulatory action has been deemed to be '' a significant regulatory action'' under the Executive Order because removal of this regulation will eliminate confusing and potentially contradictory regulatory requirements which should benefit the regulated community.

Regulatory Flexibility Act

The HHS Secretary hereby certifies that the final rule will not have a significant economic impact on a substantial number of small entities.

Executive Order 12988

This action has been determined not significant for purposes of Executive Order 12866, and therefore, has not been reviewed by the Office of Management and Budget.

Executive Order 13132

This final rule does not include any regulation that preempts State, local and Indian tribe requirements, or that has any substantial direct effects on the States, relationship between the

national government and the States, or the distribution of power and responsibilities among the various levels of government.

List of Subjects in 42 CFR Part 72

Biologics, Hazardous materials transportation, Packaging and containers, Penalties, Transportation.

■ For the reasons set forth in the preamble and under the authority of 42 U.S.C. 264, 271; 31 U.S.C. 9701; 18 U.S.C. 3559, 3571, and 42 U.S.C. 262 note, the Department of Health and Human Services amends title 42 (Public Health) of the Code of Federal Regulations by removing part 72 (Interstate Shipment of Etiologic Agents).

PART 72—[REMOVED AND RESERVED]

Dated: August 15, 2007.

Julie Louise Gerberding,

Director, Centers for Disease Control and Prevention.

Dated: October 11, 2007.

Michael O. Leavitt,

Secretary.

[FR Doc. E8–1050 Filed 1–22–08; 8:45 am]

BILLING CODE 4163–18–P

DEPARTMENT OF COMMERCE

National Oceanic and Atmospheric Administration

50 CFR Part 679

[Docket No. 070213033–7033–01]

RIN 0648–XF14

Fisheries of the Exclusive Economic Zone Off Alaska; Pacific Cod by Catcher Processors Using Pot Gear in the Bering Sea and Aleutian Islands Management Area

AGENCY: National Marine Fisheries Service (NMFS), National Oceanic and Atmospheric Administration (NOAA), Commerce.

ACTION: Temporary rule; closure.

SUMMARY: NMFS is prohibiting directed fishing for Pacific cod by pot catcher processors in the Bering Sea and Aleutian Islands management area (BSAI). This action is necessary to prevent exceeding the A season allowance of the 2008 Pacific cod allowable catch (TAC) specified for pot catcher processors in the BSAI.

DATES: Effective 1200 hrs, Alaska local time (A.l.t.), January 20, 2008, though 1200 hrs, A.l.t., June 10, 2008.

FOR FURTHER INFORMATION CONTACT: Jennifer Hogan, 907–586–7228.

SUPPLEMENTARY INFORMATION: NMFS manages the groundfish fishery in the BSAI exclusive economic zone according to the Fishery Management Plan for Groundfish of the Bering Sea and Aleutian Islands Management Area (FMP) prepared by the North Pacific Fishery Management Council under authority of the Magnuson-Stevens Fishery Conservation and Management Act. Regulations governing fishing by U.S. vessels in accordance with the FMP appear at subpart H of 50 CFR part 600 and 50 CFR part 679.

The A season directed fishing allowance of the 2008 Pacific cod TAC allocated to pot catcher processors in the BSAI is 862 metric tons as established by the 2007 and 2008 final harvest specifications for groundfish in the BSAI (72 FR 9451, March 2, 2007) and revision (72 FR 71802, December 19, 2007). See § 679.20(c)(3)(iii), § 679.20(c)(5), and § 679.20(a)(7)(ii).

In accordance with § 679.20(d)(1)(iii), the Administrator, Alaska Region, NMFS, has determined that the A season allowance of the 2008 Pacific cod TAC allocated to pot catcher processors in the BSAI has been reached. Consequently, NMFS is prohibiting directed fishing for Pacific cod by pot catcher processors in the BSAI.

After the effective date of this closure the maximum retainable amounts at § 679.20(e) and (f) apply at any time during a trip.

Classification

This action responds to the best available information recently obtained from the fishery. The Assistant Administrator for Fisheries, NOAA, (AA), finds good cause to waive the requirement to provide prior notice and opportunity for public comment pursuant to the authority set forth at 5 U.S.C. 553(b)(B) as such requirement is impracticable and contrary to the public interest. This requirement is impracticable and contrary to the public interest as it would prevent NMFS from responding to the most recent fisheries data in a timely fashion and would delay the closure of Pacific cod by pot catcher processors in the BSAI. NMFS was unable to publish a notice providing time for public comment because the most recent, relevant data only became available as of January 16, 2008.

The AA also finds good cause to waive the 30-day delay in the effective date of this action under 5 U.S.C. 553(d)(3). This finding is based upon the reasons provided above for waiver of prior notice and opportunity for public comment.

This action is required by § 679.20 and is exempt from review under Executive Order 12866.

Authority: 16 U.S.C. 1801 *et seq.*

Dated: January 16, 2008.

Emily H. Menashes,

Acting Director, Office of Sustainable Fisheries, National Marine Fisheries Service.

[FR Doc. 08–242 Filed 1–17–08; 2:31 pm]

BILLING CODE 3510–22–S

DEPARTMENT OF COMMERCE

National Oceanic and Atmospheric Administration

50 CFR Part 679

[Docket No. 070213033–7033–01]

RIN 0648–XF06

Fisheries of the Exclusive Economic Zone Off Alaska; Pacific Cod by Catcher Vessels Greater Than or Equal to 60 Feet (18.3 Meters) Length Overall and Using Pot Gear in the Bering Sea and Aleutian Islands Management Area

AGENCY: National Marine Fisheries Service (NMFS), National Oceanic and Atmospheric Administration (NOAA), Commerce.

ACTION: Temporary rule; closure.

SUMMARY: NMFS is prohibiting directed fishing for Pacific cod by pot catcher vessels greater than or equal to 60 feet (≥ 18.3 meters (m)) length overall (LOA) in the Bering Sea and Aleutian Islands management area (BSAI). This action is necessary to prevent exceeding the A season allowance of the 2008 Pacific cod allowable catch (TAC) specified for pot catcher vessels ≥ 60 feet (18.3 m) LOA in the BSAI.

DATES: Effective 1200 hrs, Alaska local time (A.l.t.), January 18, 2008, though 1200 hrs, A.l.t., June 10, 2008.

FOR FURTHER INFORMATION CONTACT: Jennifer Hogan, 907–586–7228.

SUPPLEMENTARY INFORMATION: NMFS manages the groundfish fishery in the BSAI exclusive economic zone according to the Fishery Management Plan for Groundfish of the Bering Sea and Aleutian Islands Management Area (FMP) prepared by the North Pacific Fishery Management Council under authority of the Magnuson-Stevens Fishery Conservation and Management Act. Regulations governing fishing by U.S. vessels in accordance with the FMP appear at subpart H of 50 CFR part 600 and 50 CFR part 679.

The A season allowance of the 2008 Pacific cod TAC allocated to pot catcher

vessels ≥ 60 feet (18.3 m) LOA in the BSAI is 4,826 metric tons as established by the 2007 and 2008 final harvest specifications for groundfish in the BSAI (72 FR 9451, March 2, 2007) and revision (72 FR 71802, December 19, 2007). See § 679.20(c)(3)(iii), § 679.20(c)(5), and § 679.20(a)(7)(ii)(A) and (a)(7)(ii)(C)(*1*)(*iv*).

In accordance with § 679.20(d)(1)(iii), the Administrator, Alaska Region, NMFS, has determined that the A season allowance of the 2008 Pacific cod TAC allocated to pot catcher vessels ≥ 60 feet (18.3 m) LOA in the BSAI has been reached. Consequently, NMFS is prohibiting directed fishing for Pacific cod by pot catcher vessels ≥ 60 feet (18.3 m) LOA in the BSAI.

After the effective date of this closure the maximum retainable amounts at § 679.20(e) and (f) apply at any time during a trip.

Classification

This action responds to the best available information recently obtained from the fishery. The Assistant Administrator for Fisheries, NOAA, (AA), finds good cause to waive the requirement to provide prior notice and opportunity for public comment pursuant to the authority set forth at 5 U.S.C. 553(b)(B) as such requirement is impracticable and contrary to the public interest. This requirement is impracticable and contrary to the public interest as it would prevent NMFS from responding to the most recent fisheries data in a timely fashion and would delay the closure of Pacific cod by pot catcher vessels ≥ 60 feet (18.3 m) LOA in the BSAI. NMFS was unable to publish a notice providing time for public comment because the most recent, relevant data only became available as of January 16, 2008.

The AA also finds good cause to waive the 30-day delay in the effective date of this action under 5 U.S.C. 553(d)(3). This finding is based upon the reasons provided above for waiver of prior notice and opportunity for public comment.

This action is required by § 679.20 and is exempt from review under Executive Order 12866.

Authority: 16 U.S.C. 1801 *et seq.*

Dated: January 16, 2008.

Emily H. Menashes,

Acting Director, Office of Sustainable Fisheries, National Marine Fisheries Service.

[FR Doc. 08–239 Filed 1–17–08; 2:31 pm]

BILLING CODE 3510–22–S

Proposed Rules

Federal Register
Vol. 73, No. 15
Wednesday, January 23, 2008

This section of the FEDERAL REGISTER contains notices to the public of the proposed issuance of rules and regulations. The purpose of these notices is to give interested persons an opportunity to participate in the rule making prior to the adoption of the final rules.

DEPARTMENT OF TRANSPORTATION

Federal Aviation Administration

14 CFR Part 23

[Docket No. CE280; Notice No. 23–07–05–SC]

Special Conditions: Embraer S.A., Model EMB–500; High Fuel Temperature

AGENCY: Federal Aviation Administration (FAA), DOT.

ACTION: Notice of proposed special conditions.

SUMMARY: This notice proposes special conditions for the Embraer S.A., Model EMB–500 airplane. This airplane will have a novel or unusual design feature(s) associated with high fuel temperature. The applicable airworthiness regulations do not contain adequate or appropriate safety standards for this design feature. These proposed special conditions contain the additional safety standards that the Administrator considers necessary to establish a level of safety equivalent to that established by the existing airworthiness standards.

DATES: Comments must be received on or before February 22, 2008.

ADDRESSES: Mail comments on this proposal in duplicate to: Federal Aviation Administration, Regional Counsel, ACE–7, Attention: Rules Docket, Docket No. CE280, 901 Locust, Room 506, Kansas City, Missouri 64106, or deliver them in duplicate to the Regional Counsel at the above address. Mark comments: CE280. You may inspect comments in the Rules Docket weekdays, except Federal holidays, between 7:30 a.m. and 4 p.m.

FOR FURTHER INFORMATION CONTACT: Peter L. Rouse, Federal Aviation Administration, Aircraft Certification Service, Small Airplane Directorate, ACE–111, 901 Locust, Kansas City, Missouri, 816–329–4135, fax 816–329–4090.

SUPPLEMENTARY INFORMATION:

Comments Invited

Interested persons are invited to participate in the making of these proposed special conditions by submitting such written data, views, or arguments as they may desire. Identify the regulatory docket or notice number and submit them in duplicate to the address specified above. All communications received on or before the closing date for comments will be considered by the Administrator. The proposals described in this notice may be changed in light of the comments received. All comments received will be available in the Rules Docket for examination by interested persons, both before and after the closing date for comments. A report summarizing each substantive public contact with FAA personnel concerning this rulemaking will be filed in the docket. If you wish the FAA to acknowledge receipt of the comments submitted in response to this notice, include with those comments a self-addressed, stamped postcard on which the following statement is made: ''Comments to CE280.'' The postcard will be date stamped and returned to the commenter.

Background

On October 5, 2005, Embraer S.A. applied for a type certificate for their new Model EMB–500. The Model EMB–500 is a normal category, low-winged monoplane with ''T'' tailed vertical and horizontal stabilizers, retractable tricycle type landing gear and twin turbofan engines mounted on the aircraft fuselage. Its design characteristics include a predominance of metallic construction. The maximum takeoff weight is 9,965 pounds, the V_{MO}/M_{MO} is 275 KIAS/M 0.70 and maximum altitude is 41,000 feet.

Fuel temperatures on the Embraer EMB 500 are higher than envisioned by 14 CFR part 23. The rule governing fuel system hot weather operation is 14 CFR part 23, § 23.961, and the rule requires the following:

> Each fuel system must be free from vapor lock when using fuel at its critical temperature, with respect to vapor formation, when operating the airplane in all critical operating and environmental conditions for which approval is requested. For turbine fuel, the initial temperature must be 110 °F, −0°, +5° or the maximum outside air temperature for which approval is requested, whichever is more critical.

During other airplane certification projects, the fuel system temperatures associated with the PW600 series turbofan engines were much higher than those previously encountered on other engines. The engine oil/fuel heat fuel system includes an exchanger that cools the oil and heats the fuel. Consequently, the motive flow fuel that is returned to the airplane from the engine is hot and heats the airplane wing fuel and tank. As a result, on the PW615F, the engine inlet maximum fuel temperature was increased from a development value of 126 °F (52 °C) to an initial (Transport Canada) certification value of 172 °F (78 °C) for kerosene type fuels.

Initial concerns regarding the safe operation of the airplane with fuel temperatures significantly greater than 110 °F are identified as:

- Fuel degradation with resultant byproducts at high temperatures.
- Operation with the higher vapor liquid ratios.
- Fuel system component qualification at the higher temperatures.
- Solubility of water in fuel.
- Microbial growth.
- Fuel tank material/surrounding structure compatibility with the elevated temperatures.
- Service and maintenance personnel susceptibility to burns.

An initial review of FAA experience regarding airplane fuel temperatures identifies that for large part 25 aircraft, fuel temperature upper limits are characterized by § 25.961 values, i.e. 110–120 °F. Operationally, the buildup of vapor pockets within fuel lines has been an issue from this perspective for large transport category airplanes. A summary of the maximum engine inlet fuel temperatures for engines used in part 23 and part 25 business jet airplanes that are FAA certified follows:

Engine model	Sea level maximum inlet fuel temperature
PWC615F	126 F (52 C) draft IM.
PWC615F	172 F (78 C) Transport Canada.
PWC615F	190 F (88 C).
530A, 535A	135 F (57 C).
545A	135 F (57 C).
305A	135 F (57 C).
308	135 F (57 C).
JT15D–4, –4B, –4D	135 F (57 C).
FJ44–3A	200 F (93 C).
FJ44–2A	135 F (57 C).
FJ44–1B	135 F (57 C).
TFE731–2/–3	135 F (57 C).

Engine model	Sea level maximum inlet fuel temperature
TFE731–20	135 F (57 C).

CAR part 3, as amended to May 15, 1956, defined the maximum anticipated summer air temperatures in § 3.583; ''The maximum anticipated summer air temperature shall be considered to be 100 °F at sea level and to decrease from this value at the rate of 3.6 °F per thousand feet above sea level.'' Concurrently, § 3.438 required that ''* * * fuel system features conducive to vapor formation shall be demonstrated to be free from vapor lock when using fuel at a temperature of 110 °F under critical operating conditions.'' Building from CAR part 3, 14 CFR part 23 envisioned maximum fuel temperatures at or near 110 °F as set forth in 14 CFR part 23, § 23.961. The turbine fuel temperature requirement for hot weather operation is 110 − 0, +5 °F, or the maximum outside air temperature for which approval is requested, whichever is more critical. Engine heat rejection such that the airplane fuel temperature is characterized by engine heat rejection rather than ambient air temperature is a new and novel design that was not envisioned by 14 CFR part 23.

14 CFR part 23 certification experience to date has shown that hot weather certification testing with 110 °F fuel temperatures is adequate for fuel system operations for fuel tank fuel temperatures characterized by ambient air temperatures including cooling as a result of the atmospheric temperature lapse rate. Heating that increases the airplane fuel system operational temperatures introduces several fuel system concerns. Each must be shown to be acceptable. Compliance by design (i.e. lack of ability to shutoff the engine motive flow) may be utilized although associated type certificate data sheet information may also be necessary to assure future system changes are compliant.

A special condition for the higher fuel system temperatures of the Embraer EMB 500 airplane is proposed. The special condition would require the compliance to 14 CFR part 23, § 23.961, fuel system hot weather operation test temperature to be commensurate with the highest fuel temperature expected at the maximum outside air temperature for which approval is requested.

Type Certification Basis

Under 14 CFR part 21, § 21.17, Embraer S.A. must show that the Model EMB–500 meets the applicable provisions of 14 CFR part 23, as amended by Amendments 23–1 through 23–55, thereto.

If the Administrator finds that the applicable airworthiness regulations (i.e., 14 CFR part 23) do not contain adequate or appropriate safety standards for the Model EMB–500 because of a novel or unusual design feature, special conditions are prescribed under § 21.16.

In addition to the applicable airworthiness regulations and special conditions, the Model EMB–500 must comply with the fuel vent and exhaust emission requirements of 14 CFR part 34 and the noise certification requirements of 14 CFR part 36, and the FAA must issue a finding of regulatory adequacy under section 611 of Public Law 92–574, the ''Noise Control Act of 1972.''

Special conditions, as appropriate, as defined in § 11.19, are issued under § 11.38, and become part of the type certification basis under § 21.17(a)(2).

Special conditions are initially applicable to the model for which they are issued. Should the type certificate for that model be amended later to include any other model that incorporates the same novel or unusual design feature, the special conditions would also apply to the other model under § 21.101(a)(1).

Novel or Unusual Design Features

The Model EMB–500 will incorporate the following novel or unusual design features: High Fuel Temperatures.

Applicability

As discussed above, these special conditions are applicable to the Model EMB–500. Should Embraer S.A. apply later for a change to the type certificate to include another model incorporating the same novel or unusual design feature, the special conditions would apply to that model as well under § 21.101(a)(1).

Conclusion

This action affects only certain novel or unusual design features on one model, Model EMB–500, of airplanes. It is not a rule of general applicability, and it affects only the applicant who applied to the FAA for approval of these features on the airplane.

List of Subjects in 14 CFR Part 23

Aircraft, Aviation safety, Signs and symbols.

Citation

The authority citation for these special conditions is as follows:

Authority: 49 U.S.C. 106(g), 40113 and 44701; 14 CFR 21.16 and 21.17; and 14 CFR 11.38 and 11.19.

The Proposed Special Conditions

Accordingly, the Federal Aviation Administration (FAA) proposes the following special conditions as part of the type certification basis for the Embraer S.A. Model EMB–500 airplanes.

1. SC § 23.961:

Instead of compliance with § 23.961, the following apply:

Each fuel system must be free from vapor lock when using fuel at its critical temperature, with respect to vapor formation, when operating the airplane in all critical operating and environmental conditions for which approval is requested. For turbine fuel, the initial temperature must be the highest fuel temperature expected at the maximum outside air temperature for which approval is requested.

Issued in Kansas City, Missouri, on January 7, 2008.

John Colomy,

Acting Manager, Small Airplane Directorate, Aircraft Certification Service.

[FR Doc. E8–1075 Filed 1–22–08; 8:45 am]

BILLING CODE 4910–13–P

DEPARTMENT OF TRANSPORTATION

Federal Aviation Administration

14 CFR Part 23

[Docket No. CE284; Notice No. 23–08–02–SC]

Special Conditions: Embraer S.A.; Model EMB–500; Static Pressure System

AGENCY: Federal Aviation Administration (FAA), DOT.

ACTION: Notice of proposed special conditions.

SUMMARY: This notice proposes special conditions for the Embraer S.A.; Model EMB–500 airplane. This airplane has a novel or unusual design feature associated with the static pressure system. The applicable airworthiness regulations do not contain adequate or appropriate safety standards for this design feature. These proposed special conditions contain the additional safety standards that the Administrator considers necessary to harmonize with Brazil's Agencia Nacional de Aviacao Civil (ANAC) and to maintain the same level of safety between the ANAC Type Certificate and the U.S. Type Certificate.

DATES: Comments must be received on or before February 22, 2008.

ADDRESSES: Mail comments on this proposal in duplicate to: Federal Aviation Administration, Regional

Counsel, ACE–7, Attention: Rules Docket, Docket No. CE284, 901 Locust, Room 506, Kansas City, Missouri 64106, or delivered in duplicate to the Regional Counsel at the above address. Comments must be marked: CE284. Comments may be inspected in the Rules Docket weekdays, except Federal holidays, between 7:30 a.m. and 4 p.m.

FOR FURTHER INFORMATION CONTACT:

Leslie B. Taylor, Federal Aviation Administration, Aircraft Certification Service, Small Airplane Directorate, ACE–111, 901 Locust, Room 301, Kansas City, Missouri, 816–329–4134, fax 816–329–4090, e-mail at *leslie.b.taylor@faa.gov*.

SUPPLEMENTARY INFORMATION:

Comments Invited

Interested persons are invited to participate in the making of these proposed special conditions by submitting such written data, views, or arguments as they may desire. Identify the regulatory docket or notice number and submit them in duplicate to the address specified above. All communications received on or before the closing date for comments will be considered by the Administrator. The proposals described in this notice may be changed in light of the comments received. All comments received will be available in the Rules Docket for examination by interested persons, both before and after the closing date for comments. A report summarizing each substantive public contact with FAA personnel concerning this rulemaking will be filed in the docket. If you wish the FAA to acknowledge receipt of the comments submitted in response to this notice, include with those comments a self-addressed, stamped postcard on which the following statement is made: ''Comments to Docket No. CE284.'' The postcard will be date stamped and returned to the commenter.

Background

On October 5, 2005, Embraer S.A. applied for a type certificate for their new Model EMB–500. The EMB–500 is a twin engine jet of a type popularly referred to as a very light jet. The airplane is proposed to be type certificated in the normal category of 14 CFR part 23 (and comparable Brazilian requirements RBHA 23). The EMB–500 is predominantly of metallic construction and is a conventionally configured low-wing monoplane with a T-tail and tricycle landing gear. The two Pratt and Whitney of Canada 1,600 pound thrust P&WC 617F/1 turbofan engines are aft fuselage mounted in typical business jet fashion. The engines are full authority digital engine control (FADEC) equipped.

The airplane's maximum takeoff weight is 9,965 pounds. The V_{MO}/M_{MO} is 275 KIAS/M .70, with a maximum operating altitude of 41,000 feet. Requested operations are day/night VFR/IFR, and icing operations approval is requested.

The advance of electronic technology in altimetry systems has permitted a better precision of altitude measurements, including the improvements to Altimetry System Error (ASE) (difference between the pressure altitude displayed to the flightcrew when referenced to the International Standard Atmosphere (ISA) standard ground pressure setting and free stream pressure), Static Source Error (difference between the pressure sensed by the static system at the static port and the undisturbed ambient pressure) and Static Source Error Correction (SSEC) (correction for static source error). These parameters are essential, for example, in operation in Reduced Vertical Minimum Separation (RVSM) airspace. This special condition for the Embraer EMB–500 airplane for the Static Pressure System, including new avionics and certain performance characteristics inherent in this type of airplane, was partially envisioned in existing regulations. This special condition contains the additional airworthiness standards that the FAA considers necessary to harmonize with ANAC and to maintain the same level of safety between the ANAC Type Certificate and the U.S. Type Certificate.

Type Certification Basis

Under the provisions of 14 CFR part 21, § 21.17, Embraer S.A. must show that the EMB–500 meets the applicable provisions of 14 CFR part 23, as amended by Amendment 23–1 through Amendment 23–55 thereto.

If the Administrator finds that the applicable airworthiness regulations (i.e., 14 CFR part 23) do not contain adequate or appropriate safety standards for the EMB–500 because of a novel or unusual design feature, special conditions are prescribed under the provisions of § 21.16.

In addition to the applicable airworthiness regulations and special conditions, the EMB–500 must comply with the fuel vent and exhaust emission requirements of 14 CFR part 34 and the noise certification requirements of 14 CFR part 36; and the FAA must issue a finding of regulatory adequacy pursuant to section 611 of Public Law 92–574, the ''Noise Control Act of 1972.''

Special conditions, as appropriate, as defined in § 11.19, are issued in accordance with § 11.38 and become part of the type certification basis in accordance with § 21.17(a)(2).

Special conditions are initially applicable to the model for which they are issued. Should the type certificate for that model be amended later to include any other model that incorporates the same novel or unusual design feature, the special conditions would also apply to the other model under the provisions of § 21.101.

Novel or Unusual Design Features

The EMB–500 will incorporate the following novel or unusual design features:

The avionics system provides corrections to the altimeter indication, which introduces failure conditions not in other Static Pressure Systems.

Applicability

As discussed above, these special conditions are applicable to the EMB–500. If Embraer S.A. applies at a later date for a change to the type certificate to include another model incorporating the same novel or unusual design feature, the special conditions would apply to that model as well under § 21.101.

Conclusion

This action affects only certain novel or unusual design features on one model of airplane. It is not a rule of general applicability and affects only the applicant who applied to the FAA for approval of these features on the airplane.

List of Subjects in 14 CFR Part 23

Aircraft, Aviation safety, Signs and symbols.

Citation

The authority citation for these special conditions is as follows:

Authority: 49 U.S.C. 106(g), 40113 and 44701; 14 CFR 21.16 and 21.17; and 14 CFR 11.38 and 11.19.

The Proposed Special Conditions

Accordingly, the Federal Aviation Administration proposes the following special conditions as part of the type certification basis for the Embraer S.A.; Model EMB–500 airplanes.

Static Pressure System

If an altimeter system is fitted with a device that provides corrections to the altimeter indication, the device must be designed and installed in such a manner that it can be bypassed when it malfunctions, unless an alternate altimeter system is provided. Each correction device must be fitted with a

means for indicating occurrence of reasonably probable malfunctions, including power failure, to the flightcrew.

Issued in Kansas City, Missouri, on January 15, 2008.

James E. Jackson,

Acting Manager, Small Airplane Directorate, Aircraft Certification Service.

[FR Doc. E8–1076 Filed 1–22–08; 8:45 am]

BILLING CODE 4910–13–P

DEPARTMENT OF TRANSPORTATION

Federal Aviation Administration

14 CFR Part 23

[Docket No. CE283; Notice No. 23–08–01–SC]

Special Conditions: Embraer S.A.; Model EMB–500; Brakes—Designation of Applicable Regulations

AGENCY: Federal Aviation Administration (FAA), DOT.

ACTION: Notice of proposed special conditions.

SUMMARY: This notice proposes special conditions for the Embraer S.A.; Model EMB–500 airplane. This airplane has a novel or unusual design feature associated with the braking system. The applicable airworthiness regulations do not contain adequate or appropriate safety standards for this design feature. These proposed special conditions contain the additional safety standards that the Administrator considers necessary to harmonize with Brazil's Agencia Nacional de Aviacao Civil (ANAC) and to maintain the same level of safety between the ANAC Type Certificate and the U.S. Type Certificate.

DATES: Comments must be received on or before February 22, 2008.

ADDRESSES: Mail comments on this proposal in duplicate to: Federal Aviation Administration, Regional Counsel, ACE–7, Attention: Rules Docket, Docket No. CE283, 901 Locust, Room 506, Kansas City, Missouri 64106, or delivered in duplicate to the Regional Counsel at the above address. Comments must be marked: CE283. Comments may be inspected in the Rules Docket weekdays, except Federal holidays, between 7:30 a.m. and 4 p.m.

FOR FURTHER INFORMATION CONTACT: Leslie B. Taylor, Federal Aviation Administration, Aircraft Certification Service, Small Airplane Directorate, ACE–111, 901 Locust, Room 301, Kansas City, Missouri, 816–329–4134, fax 816–329–4090, e-mail at *leslie.b.taylor@faa.gov.*

SUPPLEMENTARY INFORMATION:

Comments Invited

Interested persons are invited to participate in the making of these proposed special conditions by submitting such written data, views, or arguments as they may desire. Identify the regulatory docket or notice number and submit them in duplicate to the address specified above. All communications received on or before the closing date for comments will be considered by the Administrator. The proposals described in this notice may be changed in light of the comments received. All comments received will be available in the Rules Docket for examination by interested persons, both before and after the closing date for comments. A report summarizing each substantive public contact with FAA personnel concerning this rulemaking will be filed in the docket. If you wish the FAA to acknowledge receipt of the comments submitted in response to this notice, include with those comments a self-addressed, stamped postcard on which the following statement is made: ''Comments to Docket No. CE283.'' The postcard will be date stamped and returned to the commenter.

Background

On October 5, 2005, Embraer S.A. applied for a type certificate for their new Model EMB–500. The EMB–500 is a twin engine jet of a type popularly referred to as a very light jet. The airplane is proposed to be type certificated in the normal category of 14 CFR part 23 (and comparable Brazilian requirements RBHA 23). The EMB–500 is predominantly of metallic construction and is a conventionally configured low-wing monoplane with a T-tail and tricycle landing gear. The two Pratt and Whitney of Canada 1,600 pound thrust P&WC 617F/1 turbofan engines are aft fuselage mounted in typical business jet fashion. The engines are full authority digital engine control (FADEC) equipped.

The airplane's maximum takeoff weight is 9,965 pounds. The VMO/MMO is 275 KIAS/M .70, with a maximum operating altitude of 41,000 feet. Requested operations are day/night VFR/IFR, and icing operations approval is requested.

The FAA considers it necessary to add an additional airworthiness standard to adopt the commuter category requirement in 14 CFR 23.735(e), which the Administrator considers necessary to harmonize with ANAC and to maintain the same level of safety between the ANAC Type Certificate and the U.S. Type Certificate.

Type Certification Basis

Under the provisions of 14 CFR part 21, § 21.17, Embraer S.A. must show that the EMB–500 meets the applicable provisions of 14 CFR part 23, as amended by Amendment 23–1 through Amendment 23–55 thereto.

If the Administrator finds that the applicable airworthiness regulations (i.e., 14 CFR part 23) do not contain adequate or appropriate safety standards for the EMB–500 because of a novel or unusual design feature, special conditions are prescribed under the provisions of § 21.16.

In addition to the applicable airworthiness regulations and special conditions, the EMB–500 must comply with the fuel vent and exhaust emission requirements of 14 CFR part 34 and the noise certification requirements of 14 CFR part 36; and the FAA must issue a finding of regulatory adequacy under section 611 of Public Law 92–574, the ''Noise Control Act of 1972.''

Special conditions, as appropriate, as defined in § 11.19, are issued under § 11.38 and become part of the type certification basis under § 21.17(a)(2).

Special conditions are initially applicable to the model for which they are issued. Should the type certificate for that model be amended later to include any other model that incorporates the same novel or unusual design feature, the special conditions would also apply to the other model under the provisions of § 21.101(a)(1).

Novel or Unusual Design Features

The EMB–500 will incorporate the following novel or unusual design features: The takeoff speed and takeoff distance for this jet airplane make it necessary to adopt rejected takeoff requirements.

Applicability

As discussed above, these special conditions are applicable to the EMB–500. If Embraer S.A. applies at a later date for a change to the type certificate to include another model incorporating the same novel or unusual design feature, the special conditions would apply to that model as well under § 21.101(a)(1).

Conclusion

This action affects only certain novel or unusual design features on one model of airplane. It is not a rule of general applicability and affects only the applicant who applied to the FAA for approval of these features on the airplane.

List of Subjects in 14 CFR Part 23

Aircraft, Aviation safety, Signs and symbols.

Citation

The authority citation for these special conditions is as follows:

Authority: 49 U.S.C. 106(g), 40113 and 44701; 14 CFR 21.16 and 21.17; and 14 CFR 11.38 and 11.19.

The Proposed Special Conditions

Accordingly, the Federal Aviation Administration (FAA) proposes the following special conditions as part of the type certification basis for the Embraer S.A. Model EMB–500 airplanes. Brakes-Designation of Applicable Regulations.

SC 23.735(e): Delete ''In addition, for commuter category airplanes.''

The rejected takeoff brake kinetic energy capacity rating of each main wheel brake assembly must not be less than the kinetic energy absorption requirements determined under either of the following methods.

(e)(1) The brake kinetic energy absorption requirements must be based on a conservative rational analysis of the sequence of events expected during a rejected takeoff at the design takeoff weight.

(e)(2) Instead of rational analysis, the kinetic energy absorption requirements for each main wheel brake assembly may be derived from the following formula—

$$KE = 0.0443WV^2N$$

Where:

KE =Kinetic energy per wheel (ft.-lbs.);
W = Design takeoff weight (lbs.);
V = Ground speed, in knots, associated with the maximum value of V_1 selected in accordance with § 23.51(c)(1);
N = Number of main wheels with brakes.

Issued in Kansas City, Missouri on January 15, 2008.

James E. Jackson,

Acting Manager, Small Airplane Directorate, Aircraft Certification Service.

[FR Doc. E8–1077 Filed 1–22–08; 8:45 am]

BILLING CODE 4910–13–P

DEPARTMENT OF TRANSPORTATION

Federal Aviation Administration

14 CFR Part 39

[Docket No. FAA–2008–0042; Directorate Identifier 2007–SW–26–AD]

RIN 2120–AA64

Airworthiness Directives; Eurocopter Deutschland GMBH Model MBB–BK 117C–2 Helicopters

AGENCY: Federal Aviation Administration (FAA), DOT.

ACTION: Notice of proposed rulemaking (NPRM).

SUMMARY: We propose to adopt a new airworthiness directive (AD) for Eurocopter Deutschland GMBH (Eurocopter) Model MBB–BK 117C–2 helicopters. This proposed AD results from mandatory continuing airworthiness information (MCAI) originated by an aviation authority of another country to identify and correct an unsafe condition on an aviation product. The European Aviation Safety Agency for the Republic of Germany, with which we have a bilateral agreement, states in the MCAI:

During inadvertent operation of the fire extinguishing system, in one case it occurred that one of the two injection tubes became disconnected. This condition, if not corrected, could affect the ability of the fire extinguishing system to perform its intended function in the case of activation.

The inability of the fire extinguishing system to suppress an engine fire creates an unsafe condition. The proposed actions are intended to address this unsafe condition by further securing the injection tubes with improved clamps, allowing suppression of a contained engine fire, and preventing an uncontained engine fire and subsequent loss of the helicopter.

DATES: We must receive comments on this proposed AD by February 22, 2008.

ADDRESSES: You may send comments by any of the following methods:

- *Federal eRulemaking Portal: http://www.regulations.gov*. Follow the instructions for submitting comments.
- *Fax:* 202–493–2251.
- *Mail:* U.S. Department of Transportation, Docket Operations, M–30, West Building, Ground Floor, Room W12–140, 1200 New Jersey Avenue, SE., Washington, DC 20590.
- *Hand Delivery:* Deliver to U.S. Department of Transportation, Docket Operations, M–30, West Building, Ground Floor, Room W12–140, 1200 New Jersey Avenue, SE., Washington, DC 20590 between 9 a.m. and 5 p.m., Monday through Friday, except Federal holidays.

Examining the AD Docket

You may examine the AD docket on the Internet at *http://www.regulations.gov* or in person at the Docket Operations office between 9 a.m. and 5 p.m., Monday through Friday, except Federal holidays. The AD docket contains this proposed AD, the economic evaluation, any comments received, and other information. The street address for the Docket Operations office (telephone (800) 647–5527) is in the **ADDRESSES** section. Comments will be available in the AD docket shortly after receipt.

FOR FURTHER INFORMATION CONTACT: John Strasburger, Aviation Safety Engineer, FAA, Rotorcraft Directorate, Regulations and Guidance Group, Fort Worth, Texas 76193–0111, telephone (817) 222–5167, fax (817) 222–5961.

SUPPLEMENTARY INFORMATION:

Streamlined Issuance of AD

The FAA is implementing a new process for streamlining the issuance of ADs related to MCAI. This streamlined process will allow us to adopt MCAI safety requirements in a more efficient manner and will reduce safety risks to the public. This process continues to follow all FAA AD issuance processes to meet legal, economic, Administrative Procedure Act, and **Federal Register** requirements. We also continue to meet our technical decision-making responsibilities to identify and correct unsafe conditions on U.S.-certificated products.

This proposed AD references the MCAI and related service information that we considered in forming the engineering basis to correct the unsafe condition. The proposed AD contains text copied from the MCAI and for this reason might not follow our plain language principles.

Comments Invited

We invite you to send any written relevant data, views, or arguments about this proposed AD. Send your comments to an address listed under the **ADDRESSES** section. Include ''Docket No. FAA–2008–0042; Directorate Identifier 2007–SW–26–AD'' at the beginning of your comments. We specifically invite comments on the overall regulatory, economic, environmental, and energy aspects of this proposed AD. We will consider all comments received by the closing date and may amend this proposed AD based on those comments.

We will post all comments we receive, without change, to *http://www.regulations.gov*, including any

personal information you provide. We will also post a report summarizing each substantive verbal contact we receive about this proposed AD.

Discussion

The European Aviation Safety Agency (EASA), which is the Technical Agent for the Member States of the European Community, has issued an MCAI in the form of an EASA AD No. 2007–0121, dated May 3, 2007 (referred to after this as ''the MCAI''), to correct an unsafe condition for this German-certificated product. The MCAI states:

> During inadvertent operation of the fire extinguishing system, in one case it occurred that one of the two injection tubes became disconnected. This condition, if not corrected, could affect the ability of the fire extinguishing system to perform its intended function in the case of activation.

The inability of the fire extinguishing system to suppress an engine fire creates an unsafe condition. The proposed actions are intended to address this unsafe condition by further securing the injection tubes with improved clamps, allowing suppression of a contained engine fire, and preventing an uncontained engine fire and subsequent loss of the helicopter.

You may obtain further information by examining the MCAI and service information in the AD docket.

Relevant Service Information

Eurocopter has issued Alert Service Bulletin MBB BK117 C–2–26A–001, dated January 22, 2007. The actions described in the MCAI are intended to correct the same unsafe condition as that identified in the service information.

FAA's Determination and Requirements of This Proposed AD

This product has been approved by the aviation authority of the Federal Republic of Germany, and is approved for operation in the United States. Pursuant to our bilateral agreement with this State of Design, we have been notified of the unsafe condition described in the MCAI and service information. We are proposing this AD because we evaluated all pertinent information and determined an unsafe condition exists and is likely to exist or develop on other products of the same type design.

Differences Between This AD and the MCAI or Service Information

We have reviewed the MCAI and related service information and, in general, agree with their substance. But we might have found it necessary to use different words from those in the MCAI to ensure the AD is clear for U.S. operators and is enforceable. In making these changes, we do not intend to differ substantively from the information provided in the MCAI and related service information. Any such differences are highlighted in the ''Differences Between the FAA AD and the MCAI'' section in the proposed AD.

Costs of Compliance

We estimate that this proposed AD would affect about 26 helicopters of U.S. registry. We also estimate that it would take about 3.5 work-hours per helicopter to replace the clamps on the injection tubes. The average labor rate is $80 per work-hour. Required parts would cost $20 per helicopter. Based on these figures, we estimate the cost of the proposed AD on U.S. operators to be $7,800, or $300 per helicopter.

Authority for This Rulemaking

Title 49 of the United States Code specifies the FAA's authority to issue rules on aviation safety. Subtitle I, section 106, describes the authority of the FAA Administrator. ''Subtitle VII: Aviation Programs,'' describes in more detail the scope of the Agency's authority.

We are issuing this rulemaking under the authority described in ''Subtitle VII, Part A, Subpart III, Section 44701: General requirements.'' Under that section, Congress charges the FAA with promoting safe flight of civil aircraft in air commerce by prescribing regulations for practices, methods, and procedures the Administrator finds necessary for safety in air commerce. This regulation is within the scope of that authority because it addresses an unsafe condition that is likely to exist or develop on products identified in this rulemaking action.

Regulatory Findings

We determined that this proposed AD would not have federalism implications under Executive Order 13132. This proposed AD would not have a substantial direct effect on the States, on the relationship between the national Government and the States, or on the distribution of power and responsibilities among the various levels of government.

For the reasons discussed above, I certify this proposed regulation:

1. Is not a ''significant regulatory action'' under Executive Order 12866;

2. Is not a ''significant rule'' under the DOT Regulatory Policies and Procedures (44 FR 11034, February 26, 1979); and

3. Will not have a significant economic impact, positive or negative, on a substantial number of small entities under the criteria of the Regulatory Flexibility Act.

We prepared an economic evaluation of the estimated costs to comply with this proposed AD and placed it in the AD docket.

List of Subjects in 14 CFR Part 39

Air transportation, Aircraft, Aviation safety, Safety.

The Proposed Amendment

Accordingly, under the authority delegated to me by the Administrator, the FAA proposes to amend 14 CFR part 39 as follows:

PART 39—AIRWORTHINESS DIRECTIVES

1. The authority citation for part 39 continues to read as follows:

Authority: 49 U.S.C. 106(g), 40113, 44701.

§ 39.13 [Amended]

2. The FAA amends § 39.13 by adding the following new AD:

Eurocopter Deutschland GmbH: Docket No. FAA–2008–0042; Directorate Identifier 2007–SW–26–AD.

Comments Due Date

(a) We must receive comments by February 22, 2008.

Other Affected ADs

(b) None.

Applicability

(c) This AD applies to Model MBB–BK 117C–2 helicopters, Serial Number (S/N) 9004 through S/N 9104, and S/N 9106, 9107, and 9111, with a fire extinguishing system B26K1002–801, B262K1003–801, or B262K1004–801, installed, certificated in any category.

Reason

(d) The mandatory continuing airworthiness information (MCAI) states:

During inadvertent operation of the fire extinguishing system, in one case it occurred that one of the two injection tubes became disconnected. This condition, if not corrected, could affect the ability of the fire extinguishing system to perform its intended function in the case of activation.

The inability of the fire extinguishing system to suppress an engine fire creates an unsafe condition. The proposed actions are intended to address this unsafe condition by further securing the injection tubes with improved clamps, allowing suppression of a contained engine fire, and preventing an uncontained engine fire and subsequent loss of the helicopter.

Actions and Compliance

(e) At the next 100 hours time-in-service inspection, unless already done, replace the current injection tube clamps by installing GBS clamps, part number GBSM24/18W4SK, by following the Accomplishment Instructions, paragraph A., and Figure 1 of

Eurocopter Alert Service Bulletin MBB BK117 C–2–26A–001, dated January 22, 2007.

Differences Between the FAA AD and the MCAI

(f) The FAA refers to the compliance time by hours time-in-service rather than flight hours as referred to in the MCAI.

Subject

(g) Air Transport Association of America (ATA) Code JASC 262 Extinguishing System.

Other FAA AD Provisions

(h) The following provisions also apply to this AD:

(1) *Alternative Methods of Compliance (AMOCs):* The Manager, Safety Management Group, Rotorcraft Directorate, FAA, has the authority to approve AMOCs for this AD, if requested, using the procedures found in 14 CFR 39.19. Send information to ATTN: John Strasburger, Aviation Safety Engineer, Fort Worth, Texas 76193–0111, telephone (817) 222–5167, fax (817) 222–5961.

(2) *Airworthy Product:* Use only FAA-approved corrective actions. Corrective actions are considered FAA-approved if they are approved by the State of Design Authority (or their delegated agent) if the State of Design has an appropriate bilateral agreement with the United States. You are required to assure the product is airworthy before it is returned to service.

(3) *Reporting Requirements:* For any reporting requirement in this AD, under the provisions of the Paperwork Reduction Act, the Office of Management and Budget (OMB) has approved the information collection requirements and has assigned OMB Control Number 2120–0056.

Related Information

(i) MCAI Airworthiness Directive No. 2007–0121, dated May 3, 2007, contains related information.

Issued in Fort Worth, Texas, on January 4, 2008.

David A. Downey,

Manager, Rotorcraft Directorate, Aircraft Certification Service.

[FR Doc. E8–1023 Filed 1–22–08; 8:45 am]

BILLING CODE 4910–13–P

DEPARTMENT OF TRANSPORTATION

Federal Aviation Administration

14 CFR Part 39

[Docket No. FAA–2008–0040; Directorate Identifier 2007–SW–13–AD]

RIN 2120–AA64

Airworthiness Directives; Bell Helicopter Textron Canada (BHTC) Models 206A, 206B, 206L, 206L–1, 206L–3, and 206L–4 Helicopters

AGENCY: Federal Aviation Administration (FAA), DOT.

ACTION: Notice of proposed rulemaking (NPRM).

SUMMARY: We propose to adopt a new airworthiness directive (AD) for the specified BHTC model helicopters. This proposed AD results from mandatory continuing airworthiness information (MCAI) originated by an aviation authority of another country to identify and correct an unsafe condition on an aviation product. The aviation authority of Canada, with which we have a bilateral agreement, states in the MCAI:

It has been determined that some helicopters have been fitted with a CRES steel fitting, part number (P/N) 407–030–750–103, and the installation of the tailboom attachment bolt does not meet the design criteria.

The proposed AD would require actions that are intended to address the unsafe condition that results from an improper installation of the tailboom attachment bolt in the upper left-hand tailboom attachment CRES steel fitting.

DATES: We must receive comments on this proposed AD by February 22, 2008.

ADDRESSES: You may send comments by any of the following methods:

- *Federal eRulemaking Portal:* Go to *http://www.regulations.gov.* Follow the instructions for submitting comments.
- *Fax:* 202–493–2251.
- *Mail:* U.S. Department of Transportation, Docket Operations, M–30, West Building Ground Floor, Room W12–140, 1200 New Jersey Avenue, SE., Washington, DC 20590.
- *Hand Delivery:* U.S. Department of Transportation, Docket Operations, M–30, West Building Ground Floor, Room W12–140, 1200 New Jersey Avenue, SE., Washington, DC 20590, between 9 a.m. and 5 p.m., Monday through Friday, except Federal holidays.

You may get the service information identified in this proposed AD from Bell Helicopter Textron Canada, 12,800 Rue de l'Avenir, Mirabel, Quebec J7J1R4, telephone (450) 437–2862 or (800) 363–8023, fax (450) 433–0272.

Examining the AD Docket

You may examine the AD docket on the Internet at *http://www.regulations.gov;* or in person at the Docket Operations office between 9 a.m. and 5 p.m., Monday through Friday, except Federal holidays. The AD docket contains this proposed AD, the economic evaluation, any comments received, and other information. The street address for the Docket Office (telephone (800) 647–5527) is in the **ADDRESSES** section. Comments will be available in the AD docket shortly after receipt.

FOR FURTHER INFORMATION CONTACT: Sharon Miles, Aviation Safety Engineer, FAA, Rotorcraft Directorate, Regulations and Policy Group, Fort Worth, Texas 76193–0111, telephone (817) 222–5122, fax (817) 222–5961.

SUPPLEMENTARY INFORMATION:

Streamlined Issuance of AD

The FAA is implementing a new process for streamlining the issuance of ADs related to MCAI. This streamlined process will allow us to adopt MCAI safety requirements in a more efficient manner and will reduce safety risks to the public. This process continues to follow all FAA AD issuance processes to meet legal, economic, Administrative Procedure Act, and **Federal Register** requirements. We also continue to meet our technical decision-making responsibilities to identify and correct unsafe conditions on U.S.-certificated products.

This proposed AD references the MCAI and related service information that we considered in forming the engineering basis to correct the unsafe condition. The proposed AD contains text copied from the MCAI and for this reason might not follow our plain language principles.

Comments Invited

We invite you to send any written relevant data, views, or arguments about this proposed AD. Send your comments to an address listed under the **ADDRESSES** section. Include ''Docket No. FAA–2008–0040; Directorate Identifier 2007–SW–13–AD'' at the beginning of your comments. We specifically invite comments on the overall regulatory, economic, environmental, and energy aspects of this proposed AD. We will consider all comments received by the closing date and may amend this proposed AD based on those comments.

We will post all comments we receive, without change, to *http://www.regulations.gov,* including any personal information you provide. We will also post a report summarizing each substantive verbal contact we receive about this proposed AD.

Discussion

Transport Canada, which is the aviation authority for Canada, has issued an MCAI in the form of Canadian Airworthiness Directive CF–2007–01, dated January 19, 2007 (referred to after this as ''the MCAI''), to correct an unsafe condition for the Canadian-certificated products. The MCAI states:

It has been determined that some helicopters have been fitted with a CRES steel fitting, part number (P/N) 407–030–750–103, and the installation of the tailboom

attachment bolt does not meet the design criteria.

You may obtain further information by examining the MCAI and service information in the AD docket.

Relevant Service Information

Bell Helicopter Textron has issued Alert Service Bulletin Nos. 206–06–110 and 206L–06–140, both dated September 7, 2006. The actions described in the MCAI are intended to correct the same unsafe condition as that identified in the service information.

FAA's Determination and Requirements of This Proposed AD

This product has been approved by the aviation authority of Canada and is approved for operation in the United States. Pursuant to our bilateral agreement with this State of Design Authority, we have been notified of the unsafe condition described in the MCAI and the service information. We are proposing this AD because we evaluated all pertinent information and determined an unsafe condition exists and is likely to exist or develop on other products of these same type designs.

Differences Between This AD and the MCAI or Service Information

We have reviewed the MCAI and related service information and, in general, agree with their substance. But we might have found it necessary to use different words from those in the MCAI to ensure the AD is clear for U.S. operators and is enforceable. In making these changes, we do not intend to differ substantively from the information provided in the MCAI and related service information.

We might also have proposed different actions in this AD from those in the MCAI in order to follow FAA policies. Any such differences are highlighted in the ''Differences Between the FAA AD and the MCAI'' section in the proposed AD.

Costs of Compliance

We estimate that this proposed AD would affect about 2,206 helicopters (1,471 Model 206A and 206B helicopters and 735 Model 206L helicopters) of U.S. registry. We also estimate that it would take about .5 work-hour per helicopter to determine if a tailboom attachment bolt must be replaced and, if so, 1 additional work hour to replace the tailboom attachment bolt. The average labor rate is $80 per work-hour. Required parts would cost about $133 for Model 206L series helicopters, and $71 for Model 206A and B series helicopters. Based on these figures, we estimate the cost of the proposed AD on U.S. operators to be $466,916, or $253 for each Model 206L series helicopter and $191 for each Model 206 A and B series helicopter.

Authority for This Rulemaking

Title 49 of the United States Code specifies the FAA's authority to issue rules on aviation safety. Subtitle I, section 106, describes the authority of the FAA Administrator. ''Subtitle VII: Aviation Programs,'' describes in more detail the scope of the Agency's authority.

We are issuing this rulemaking under the authority described in ''Subtitle VII, Part A, Subpart III, Section 44701: General requirements.'' Under that section, Congress charges the FAA with promoting safe flight of civil aircraft in air commerce by prescribing regulations for practices, methods, and procedures the Administrator finds necessary for safety in air commerce. This regulation is within the scope of that authority because it addresses an unsafe condition that is likely to exist or develop on products identified in this rulemaking action.

Regulatory Findings

We determined that this proposed AD would not have federalism implications under Executive Order 13132. This proposed AD would not have a substantial direct effect on the States, on the relationship between the national Government and the States, or on the distribution of power and responsibilities among the various levels of government.

For the reasons discussed above, I certify this proposed regulation:

1. Is not a ''significant regulatory action'' under Executive Order 12866;

2. Is not a ''significant rule'' under the DOT Regulatory Policies and Procedures (44 FR 11034, February 26, 1979); and

3. Will not have a significant economic impact, positive or negative, on a substantial number of small entities under the criteria of the Regulatory Flexibility Act.

We prepared an economic evaluation of the estimated costs to comply with this proposed AD and placed it in the AD docket.

List of Subjects in 14 CFR Part 39

Air transportation, Aircraft, Aviation safety, Safety.

The Proposed Amendment

Accordingly, under the authority delegated to me by the Administrator, the FAA proposes to amend 14 CFR part 39 as follows:

PART 39—AIRWORTHINESS DIRECTIVES

1. The authority citation for part 39 continues to read as follows:

Authority: 49 U.S.C. 106(g), 40113, 44701.

§ 39.13 [Amended]

2. The FAA amends § 39.13 by adding the following new AD:

Bell Helicopter Textron Canada: Docket No. FAA–2008–0040; Directorate Identifier 2007–SW–13–AD.

Comments Due Date

(a) We must receive comments by February 22, 2008.

Other Affected ADs

(b) None.

Applicability

(c) This AD applies to Model 206A, 206B, 206L, 206L–1, 206L–3, and 206L–4 helicopters, with an upper left-hand tailboom attachment CRES steel fitting, part number (P/N) 407–030–750–103, installed, certificated in any category.

Reason

(d) The mandatory continuing airworthiness information (MCAI) states:

It has been determined that some helicopters have been fitted with a CRES steel fitting, part number (P/N) 407–030–750–103, and the installation of the tailboom attachment bolt does not meet the design criteria.

We have determined that an improper installation of the tailboom attachment bolt in the upper left-hand tailboom attachment CRES steel fitting, P/N 407–030–750–103, creates an unsafe condition.

Actions and Compliance

(e) Within the next 50 hours time-in-service (TIS), unless already done, do the following:

(1) For those helicopters with an upper left-hand CRES tailboom attachment fitting, P/N 407–030–750–103, determine if the correct number and type of washers are installed, the tailboom attachment bolt is oriented in the correct direction, and the correct number of bolt threads are exposed in accordance with the NOTES on Figure 1 of the applicable Alert Service Bulletin (ASB) in the following Table I.

TABLE I

Model	ASB No. and date
206A, 206B	206–06–110, dated September 7, 2006.
206L, L–1, L–3, L–4 ..	206L–06–140, dated September 7, 2006.

(i) If the correct number and type of washers are installed, the tailboom attachment bolt is oriented in the correct direction, and the correct number of tailboom attachment bolt threads is exposed, do a torque check of the nut.

(A) If the torque is below the minimum required amount, replace the tailboom attachment bolt in accordance with the Accomplishment Instructions, Part II, step 1 of the applicable ASB listed in Table I of this AD.

(B) If the torque is above the maximum amount, adjust the torque to within the allowable range.

(ii) If an incorrect number or type of washer is installed or the tailboom attachment bolt is oriented in the wrong direction, reconfigure as necessary to meet the requirements of the Notes on Figure 1 of the applicable ASB listed in Table I of this AD.

(iii) If there is less than 1 tailboom attachment bolt thread exposed, adjust the number of washers and retorque the nut so that between 1 and 3 tailboom attachment bolt threads are exposed at the proper nut torque.

(iv) If more than 3 tailboom attachment bolt threads are exposed, replace the attachment bolt in accordance with the Accomplishment Instructions, Part II, step 1 of the applicable ASB listed in Table 1 of this AD.

(2) If a tailboom attachment bolt must be replaced based on a requirement of this AD, at 100 hours TIS after the tailboom attachment bolt is replaced, do a torque check of the nut.

Differences Between the FAA AD and the MCAI

(f) None.

Subject

(g) Air Transport Association of America (ATA) Code 5340, Fuselage Main, Attach Fittings.

Other Information

(h) The following provisions also apply to this AD:

(1) *Alternative Methods of Compliance (AMOCs):* The Manager, Safety Management Group, Rotorcraft Directorate, FAA, has the authority to approve AMOCs for this AD, if requested using the procedures found in 14 CFR 39.19. Send information to ATTN: Sharon Miles, Aerospace Engineer; Fort Worth, Texas 76193–0111, telephone (817) 222–5122, fax (817) 222–5961.

(2) *Airworthy Product:* Use only FAA-approved corrective actions. Corrective actions are considered FAA-approved if they are approved by the State of Design Authority (or their delegated agent) if the State of Design has an appropriate bilateral agreement with the United States. You are required to assure the product is airworthy before it is returned to service.

(3) *Reporting Requirements:* For any reporting requirement in this AD, under the provisions of the Paperwork Reduction Act, the Office of Management and Budget (OMB) has approved the information collection requirements and has assigned OMB Control Number 2120–0056.

Related Information

(i) MCAI Transport Canada Airworthiness Directive CF–2007–01, dated January 19, 2007, contains related information.

Issued in Fort Worth, Texas, on January 9, 2008.

Mark R. Schilling,

Acting Manager, Rotorcraft Directorate, Aircraft Certification Service.

[FR Doc. E8–1025 Filed 1–22–08; 8:45 am]

BILLING CODE 4910–13–P

DEPARTMENT OF TRANSPORTATION

Federal Aviation Administration

14 CFR Part 39

[Docket No. FAA–2008–0039; Directorate Identifier 2006–SW–13–AD]

RIN 2120–AA64

Airworthiness Directives; Bell Helicopter Textron Canada Model 222, 222B, 222U, 230 and 430 Helicopters

AGENCY: Federal Aviation Administration, DOT.

ACTION: Notice of proposed rulemaking (NPRM).

SUMMARY: This document proposes adopting a new airworthiness directive (AD) for Bell Helicopter Textron Canada (BHTC) Model 222, 222B, 222U, 230 and 430 helicopters. This proposal would require rewiring and testing the fuel valve switch on each engine and testing the ignitor system. This proposal is prompted by an in-flight incident in which a fuel valve switch failed, causing the fuel valve to inadvertently close. The actions specified by this proposed AD are intended to prevent interruption of the fuel supply caused by failure of the fuel switch, which could result in loss of engine power and subsequent loss of control of the helicopter.

DATES: Comments must be received on or before March 24, 2008.

ADDRESSES: Use one of the following addresses to submit comments on this proposed AD:

- *Federal eRulemaking Portal:* Go to *http://www.regulations.gov.* Follow the instructions for submitting comments.
- *Fax:* 202–493–2251.
- *Mail:* U.S. Department of Transportation, Docket Operations, M–30, West Building Ground Floor, Room W12–140, 1200 New Jersey Avenue, SE., Washington, DC 20590.
- *Hand Delivery:* U.S. Department of Transportation, Docket Operations, M–30, West Building Ground Floor, Room W12–140, 1200 New Jersey Avenue, SE., Washington, DC 20590, between 9 a.m. and 5 p.m., Monday through Friday, except Federal holidays.

You may get the service information identified in this proposed AD from Bell Helicopter Textron Canada, 12,800 Rue de l'Avenir, Mirabel, Quebec J7J1R4, telephone (450) 437–2862 or (800) 363–8023, fax (450) 433–0272.

You may examine the comments to this proposed AD in the AD docket on the Internet at *http://www.regulations.gov.*

FOR FURTHER INFORMATION CONTACT: Carroll Wright, Aviation Safety Engineer, FAA, Rotorcraft Directorate, Regulations and Policy Group, Fort Worth, Texas 76193–0110, telephone (817) 222–5120, fax (817) 222–5961.

SUPPLEMENTARY INFORMATION:

Comments Invited

We invite you to submit any written data, views, or arguments regarding this proposed AD. Send your comments to the address listed under the caption **ADDRESSES**. Include the docket number ''FAA–2008–0039, Directorate Identifier 2006–SW–13–AD'' at the beginning of your comments. We specifically invite comments on the overall regulatory, economic, environmental, and energy aspects of the proposed AD. We will consider all comments received by the closing date and may amend the proposed AD in light of those comments.

We will post all comments we receive, without change, to *http://www.regulations.gov,* including any personal information you provide. We will also post a report summarizing each substantive verbal contact with FAA personnel concerning this proposed rulemaking. Using the search function of our docket web site, you can find and read the comments to any of our dockets, including the name of the individual who sent or signed the comment. You may review the DOT's complete Privacy Act Statement in the **Federal Register** published on April 11, 2000 (65 FR 19477–78), or you may visit *http://www.regulations.gov.*

Examining the Docket

You may examine the docket that contains the proposed AD, any comments, and other information in person at the Docket Operations office between 9 a.m. and 5 p.m., Monday through Friday, except Federal holidays. The Docket Operations office (telephone (800) 647–5527) is located in Room W12–140 on the ground floor of the West Building at the street address stated in the **ADDRESSES** section. Comments will be available in the AD docket shortly after receipt.

Discussion

This document proposes adopting a new AD for the following BHTC helicopters:

Model No.	Serial Nos.
222	47006 through 47089.
222B	47131 through 47156.
222U	47501 through 47574.
230	23001 through 23038.
430	49001 through 49101.

This proposal would require, within 50 hours time-in-service (TIS), rewiring the switches that control the operation of the No. 1 and No. 2 engines' fuel valves, and testing the switches and the ignitor system. This proposal is prompted by an in-flight incident in which a fuel valve switch failed. The manufacturer reports that there is a possibility that a switch may fail during flight due to vibration, causing the switch to open and then causing the fuel valve to close, resulting in inadvertent shut down of an engine. The actions specified by this proposed AD are intended to prevent interruption of the fuel supply caused by failure of the fuel switch, which could result in loss of engine power and subsequent loss of control of the helicopter.

Transport Canada, the airworthiness authority for Canada, notified the FAA that an unsafe condition may exist on BHTC Model 222, 222B, 222U, 230 and 430 helicopters. Transport Canada advises of an investigation into an incident involving a BHTC Model 222 helicopter, in which the fuel shut-off switch, part number (P/N) 10648BH1–1, failed during flight causing the fuel valve to close and the engine to shut down. Review of the Service Difficulty Report database identified two other incidents of switch failure.

Bell Helicopter Textron has issued the following technical bulletins, all dated June 11, 2003, which specify rewiring the fuel valve switch:

Technical bulletin	Helicopter models affected
No. 222–03–171	Model 222 and 222B helicopters.
No. 222U–03–96.	Model 222U helicopters.
No. 230–03–35	Model 230 helicopters.
No. 430–03–33	Model 430 helicopters.

Transport Canada classified these technical bulletins as mandatory and issued AD No. CF–2006–03, dated February 28, 2006, to ensure the continued airworthiness of these helicopters in Canada. That AD requires compliance no later than May 3, 2006. This proposal would require compliance within 50 hours TIS.

This helicopter model is manufactured in Canada and is type certificated for operation in the United States under the provisions of 14 CFR 21.29 and the applicable bilateral agreement. Pursuant to the applicable bilateral agreement, Transport Canada has kept us informed of the situation described above. We have examined the findings of Transport Canada, reviewed all available information, and determined that AD action is necessary for products of these type designs that are certificated for operation in the United States.

This previously described unsafe condition is likely to exist or develop on other helicopters of these same type designs registered in the United States. Therefore, the proposed AD would require, within 50 hours TIS, rewiring the switches, P/N 10648BH1–1, located in the cockpit overhead console, that control the operation of the No. 1 and No. 2 engines' fuel valves. The actions would be required to be accomplished by following the specified portions of the technical bulletins described previously.

We estimate that this proposed AD would affect 165 helicopters of U.S. registry and the proposed actions would take approximately four work hours per helicopter to rewire the 2 fuel valve switches, and test those switches and the ignitor system at an average labor rate of $80 per work hour. Based on these figures, we estimate the total cost impact of the proposed AD on U.S. operators to be $52,800 ($320 per helicopter).

Regulatory Findings

We have determined that this proposed AD would not have federalism implications under Executive Order 13132. Additionally, this proposed AD would not have a substantial direct effect on the States, on the relationship between the national Government and the States, or on the distribution of power and responsibilities among the various levels of government.

For the reasons discussed above, I certify that the proposed regulation:

1. Is not a ''significant regulatory action'' under Executive Order 12866;

2. Is not a ''significant rule'' under the DOT Regulatory Policies and Procedures (44 FR 11034, February 26, 1979); and

3. Will not have a significant economic impact, positive or negative, on a substantial number of small entities under the criteria of the Regulatory Flexibility Act.

We prepared a draft economic evaluation of the estimated costs to comply with this proposed AD. See the AD docket to examine the draft economic evaluation.

Authority for This Rulemaking

Title 49 of the United States Code specifies the FAA's authority to issue rules on aviation safety. Subtitle I, Section 106, describes the authority of the FAA Administrator. Subtitle VII, Aviation Programs, describes in more detail the scope of the Agency's authority.

We are issuing this rulemaking under the authority described in Subtitle VII, Part A, Subpart III, Section 44701, ''General requirements.'' Under that section, Congress charges the FAA with promoting safe flight of civil aircraft in air commerce by prescribing regulations for practices, methods, and procedures the Administrator finds necessary for safety in air commerce. This regulation is within the scope of that authority because it addresses an unsafe condition that is likely to exist or develop on products identified in this rulemaking action.

List of Subjects in 14 CFR Part 39

Air transportation, Aircraft, Aviation safety, Safety.

The Proposed Amendment

Accordingly, pursuant to the authority delegated to me by the Administrator, the Federal Aviation Administration proposes to amend part 39 of the Federal Aviation Regulations (14 CFR part 39) as follows:

PART 39—AIRWORTHINESS DIRECTIVES

1. The authority citation for part 39 continues to read as follows:

Authority: 49 U.S.C. 106(g), 40113, 44701.

§ 39.13 [Amended]

2. Section 39.13 is amended by adding a new airworthiness directive to read as follows:

Bell Helicopter Textron Canada: Docket No. FAA–2008–0039; Directorate Identifier 2006–SW–13–AD.

Applicability: The following model helicopters, certificated in any category:

Model No.	Serial Nos.
222	47006 through 47089.
222B	47131 through 47156.
222U	47501 through 47574.
230	23001 through 23038.
430	49001 through 49101.

Compliance: Required within 50 hours time-in-service, unless accomplished previously.

To prevent interruption of the fuel supply caused by failure of the fuel switch, which could result in loss of engine power and subsequent loss of control of the helicopter, accomplish the following:

(a) Rewire the No. 1 and No. 2 engines' fuel valve switch, part number 10648BH1–1, and test the fuel valve switches and the ignitor system, in accordance with the

Accomplishment Instructions in Bell Helicopter Textron Technical Bulletin (TB) No. 222–03–171, Part 1, applicable to Model 222 helicopters, serial number (S/N) 47006–47038, and Part 2, applicable to Model 222 helicopters, S/N 47039–47089, and Model 222B helicopters, S/N 47131–47156; TB No. 222U–03–96, applicable to Model 222U helicopters; TB No. 230–03–35, applicable to Model 230 helicopters; and TB No. 430–03–33, applicable to Model 430 helicopters. All of the technical bulletins are dated June 11, 2003.

(b) To request a different method of compliance or a different compliance time for this AD, follow the procedures in 14 CFR 39.19. Contact the Manager, Regulations and Policy Group, FAA, *ATTN:* Carroll Wright, 2601 Meacham Blvd., Fort Worth, Texas 76193–0110, telephone (817) 222–5120, fax (817) 222–5961, for information about previously approved alternative methods of compliance.

Note: The subject of this AD is addressed in Transport Canada (Canada) AD CF–2006–03, dated February 28, 2006.

Issued in Fort Worth, Texas, on January 8, 2008.

Mark R. Schilling,

Acting Manager, Rotorcraft Directorate, Aircraft Certification Service.

[FR Doc. E8–1026 Filed 1–22–08; 8:45 am]

BILLING CODE 4910–13–P

DEPARTMENT OF TRANSPORTATION

Federal Aviation Administration

14 CFR Part 39

[Docket No. FAA–2008–0041; Directorate Identifier 2007–SW–16–AD]

RIN 2120–AA64

Airworthiness Directives; Eurocopter France Model AS 355 N Helicopters

AGENCY: Federal Aviation Administration (FAA), DOT.

ACTION: Notice of proposed rulemaking (NPRM).

SUMMARY: We propose to adopt a new airworthiness directive (AD) for the Eurocopter France (Eurocopter) Model AS 355 N helicopters. This proposed AD results from mandatory continuing airworthiness information (MCAI) originated by an aviation authority of another country to identify and correct an unsafe condition on an aviation product. The European Aviation Safety Agency (EASA), the technical Agent for France, with which we have a bilateral agreement states in the MCAI:

This Airworthiness Directive (AD) is issued because it was found that the power drawn by the starter generators from the engines is above the consumption capacity at altitudes above 3,000 meters, declared for the engines of AS 355 N helicopters.

Excessive power consumption of the starter generators reduces the engine surge margin, which can result in engine failure.

After engine start, the starter generator functions as the normal operational electrical generator.

The proposed AD would require actions that are intended to address this unsafe condition.

DATES: We must receive comments on this proposed AD by February 22, 2008.

ADDRESSES: You may send comments by any of the following methods:

- *Federal eRulemaking Portal: http://www.regulations.gov.* Follow the instructions for submitting comments.
- *Fax:* 202–493–2251.
- *Mail:* U.S. Department of Transportation, Docket Operations, M–30, West Building, Ground Floor, Room W12–140, 1200 New Jersey Avenue, SE., Washington, DC 20590.
- *Hand Delivery:* U.S. Department of Transportation, Docket Operations, M–30, West Building, Ground Floor, Room W12–140, 1200 New Jersey Avenue, SE., Washington, DC 20590 between 9 a.m. and 5 p.m., Monday through Friday, except Federal holidays.

Examining the AD Docket

You may examine the AD docket on the Internet at *http://www.regulations.gov,* or in person at the Docket Operations Office Facility between 9 a.m. and 5 p.m., Monday through Friday, except Federal holidays. The AD docket contains this proposed AD, the economic evaluation, any comments received, and other information. The street address for the Docket Operations Office (telephone (800) 647–5527) is in the **ADDRESSES** section. Comments will be available in the AD docket shortly after receipt.

FOR FURTHER INFORMATION CONTACT: Ed Cuevas, Aviation Safety Engineer, FAA, Rotorcraft Directorate, Safety Management Group, Fort Worth, Texas 76193–0111, telephone (817) 222–5355, fax (817) 222–5961.

SUPPLEMENTARY INFORMATION:

Streamlined Issuance of AD

The FAA is implementing a new process for streamlining the issuance of ADs related to MCAI. This streamlined process will allow us to adopt MCAI safety requirements in a more efficient manner and will reduce safety risks to the public. This process continues to follow all FAA AD issuance processes to meet legal, economic, Administrative Procedure Act, and **Federal Register** requirements. We also continue to meet our technical decision-making responsibilities to identify and correct unsafe conditions on U.S.-certificated products.

This proposed AD references the MCAI and related service information that we considered in forming the engineering basis to correct the unsafe condition. The proposed AD contains text copied from the MCAI and for this reason might not follow our plain language principles.

Comments Invited

We invite you to send any written relevant data, views, or arguments about this proposed AD. Send your comments to an address listed under the **ADDRESSES** section. Include ''Docket No. FAA–2008–0041; Directorate Identifier 2007–SW–16–AD'' at the beginning of your comments. We specifically invite comments on the overall regulatory, economic, environmental, and energy aspects of this proposed AD. We will consider all comments received by the closing date and may amend this proposed AD based on those comments.

We will post all comments we receive, without change, to *http://www.regulations.gov,* including any personal information you provide. We will also post a report summarizing each substantive verbal contact we receive about this proposed AD.

Discussion

The European Aviation Safety Agency (EASA), which is the Technical Agent for the Member States of the European Community, has issued an MCAI in the form of EASA Airworthiness Directive 2006–0338, dated November 7, 2006 (referred to after this as ''the MCAI''), to correct an unsafe condition for these French-certificated products. The MCAI states:

This Airworthiness Directive (AD) is issued because it was found that the power drawn by the starter generators from the engines is above the consumption capacity at altitudes above 3,000 meters, declared for the engines of AS 355 N helicopters.

Excessive power consumption of the starter generators reduces the engine surge margin, which can result in engine failure.

The starter-generator is a single unit that operates as both an engine starter generator and after starting, as an operational generator. The EASA AD and the Eurocopter service bulletin refer to this unit as a starter generator when used as a generator. The starter generator requires energy from the engine to generate electricity. When the electrical current exceeds 100 amps, the load on the engine reduces the engine surge margin and may cause the engine to surge and flame out.

Therefore, at altitudes above 10,000 feet, the maximum continuous current

supplied by each starter generator must be limited to 100 amps to prevent engine surging.

You may obtain further information by examining the MCAI and service information in the AD docket.

Relevant Service Information

Eurocopter has issued Alert Service Bulletin No. 01.00.52, Revision 1, dated September 14, 2006. The actions described in the MCAI are intended to correct the same unsafe condition as that identified in the service information.

FAA's Determination and Requirements of This Proposed AD

This product has been approved by the aviation authority of another country, and is approved for operation in the United States. Pursuant to our bilateral agreement with this State of Design Authority, we have been notified of the unsafe condition described in the MCAI and service information. We are proposing this AD because we evaluated all pertinent information and determined an unsafe condition exists and is likely to exist or develop on other products of the same type design.

Differences Between This AD and the MCAI or Service Information

We have reviewed the MCAI and related service information and, in general, agree with their substance. But we might have found it necessary to use different words from those in the MCAI to ensure the AD is clear for U.S. operators and is enforceable. In making these changes, we do not intend to differ substantively from the information provided in the MCAI and related service information.

We might also have proposed different actions in this AD from those in the MCAI in order to follow FAA policies. Any such differences are highlighted in the ''Differences Between the FAA AD and the MCAI'' section in the proposed AD.

Costs of Compliance

We estimate that this proposed AD would affect about 17 helicopters of U.S. registry. We also estimate that it would take about 15 minutes to install the placard in each helicopter. The average labor rate is $80 per work-hour. The manufacturer states in its service bulletin that the ''labels will be delivered free of charge on the Operator's order.'' Because the manufacturer has indicated it will provide the placard free of charge, we have assumed there will be no charge for these placards. However, because we do not control warranty coverage for affected parties, some parties may incur costs higher than estimated here. Based on these figures, we estimate the cost of the proposed AD on U.S. operators to be $340 or $20 per helicopter.

Authority for This Rulemaking

Title 49 of the United States Code specifies the FAA's authority to issue rules on aviation safety. Subtitle I, section 106, describes the authority of the FAA Administrator. ''Subtitle VII: Aviation Programs,'' describes in more detail the scope of the Agency's authority.

We are issuing this rulemaking under the authority described in ''*Subtitle VII, Part A, Subpart III, Section 44701:* General requirements.'' Under that section, Congress charges the FAA with promoting safe flight of civil aircraft in air commerce by prescribing regulations for practices, methods, and procedures the Administrator finds necessary for safety in air commerce. This regulation is within the scope of that authority because it addresses an unsafe condition that is likely to exist or develop on products identified in this rulemaking action.

Regulatory Findings

We determined that this proposed AD would not have federalism implications under Executive Order 13132. This proposed AD would not have a substantial direct effect on the States, on the relationship between the national Government and the States, or on the distribution of power and responsibilities among the various levels of government.

For the reasons discussed above, I certify this proposed regulation:

1. Is not a ''significant regulatory action'' under Executive Order 12866;

2. Is not a ''significant rule'' under the DOT Regulatory Policies and Procedures (44 FR 11034, February 26, 1979); and

3. Will not have a significant economic impact, positive or negative, on a substantial number of small entities under the criteria of the Regulatory Flexibility Act.

We prepared an economic evaluation of the estimated costs to comply with this proposed AD and placed it in the AD docket.

List of Subjects in 14 CFR Part 39

Air transportation, Aircraft, Aviation safety, Safety.

The Proposed Amendment

Accordingly, under the authority delegated to me by the Administrator, the FAA proposes to amend 14 CFR part 39 as follows:

PART 39—AIRWORTHINESS DIRECTIVES

1. The authority citation for part 39 continues to read as follows:

Authority: 49 U.S.C. 106(g), 40113, 44701.

§ 39.13 [Amended]

2. The FAA amends § 39.13 by adding the following new AD:

Eurocopter France: Docket No. FAA–2008–0041; Directorate Identifier 2007–SW–16–AD.

Comments Due Date

(a) We must receive comments by February 22, 2008.

Other Affected ADs

(b) None.

Applicability

(c) This AD applies to Model AS 355 N helicopters, certificated in any category.

Reason

(d) The mandatory continuing airworthiness information (MCAI) states:

This Airworthiness Directive (AD) is issued because it was found that the power drawn by the starter generators from the engines is above the consumption capacity at altitudes above 3,000 meters, declared for the engines of AS 355 N helicopters.

Excessive power consumption of the starter generators reduces the engine surge margin, which can result in engine failure.

The starter-generator is a single unit that is operated both as an engine starter generator and after starting, as an operational generator. The EASA AD and the Eurocopter service bulletin refer to this unit as a starter generator. The starter generator requires energy from the engine to generate electricity. When the electrical current exceeds 100 amps, the load on the engine reduces the engine surge margin and may cause the engine to surge and flame out.

Therefore, at altitudes above 10,000 feet, the maximum continuous current supplied by each starter generator must be limited to 100 amps to prevent engine surging.

Actions and Compliance

(e) Within 100 hours time-in-service or within 12 months, whichever occurs first, unless already done, do the following actions:

(1) Install a limitation placard (indicating the new load limitation for the starter generator) on the overhead instrument panel, immediately below the ammeter.

(2) The placard must state the following: Maximum continuous load per generator 100A IF Hp>10000 ft.

Differences Between the FAA AD and the MCAI

(f) None.

Subject

(g) Air Transport Association of America (ATA) Code 2435—Electrical Power Starter Generator, 80—Starting.

Other Information

(h) The following provisions also apply to this AD:

(1) *Alternative Methods of Compliance (AMOCs):* The Manager, Safety Management Group, FAA, has the authority to approve AMOCs for this AD, if requested using the procedures found in 14 CFR 39.19. Send information to ATTN: Ed Cuevas, Aviation Safety Engineer, Fort Worth, Texas 76193–0111, telephone (817) 222–5355, fax (817) 222–5961.

(2) *Airworthy Product:* Use only FAA-approved corrective actions. Corrective actions are considered FAA-approved if they are approved by the State of Design Authority (or their delegated agent) if the State of Design has an appropriate bilateral agreement with the United States. You are required to assure the product is airworthy before it is returned to service.

(3) *Reporting Requirements:* For any reporting requirement in this AD, under the provisions of the Paperwork Reduction Act, the Office of Management and Budget (OMB) has approved the information collection requirements and has assigned OMB Control Number 2120–0056.

Related Information

(i) MCAI EASA Airworthiness Directive No. 2006–0338, dated November 7, 2006, and Eurocopter Alert Service Bulletin, Revision 1, No. 01.00.52, dated September 14, 2006, contain related information.

Issued in Fort Worth, Texas, on December 27, 2007.

David A. Downey,

Manager, Rotorcraft Directorate, Aircraft Certification Service.

[FR Doc. E8–1027 Filed 1–22–08; 8:45 am]

BILLING CODE 4910–13–P

DEPARTMENT OF LABOR

Occupational Safety and Health Administration

29 CFR Part 1926

[Docket ID–OSHA–2007–0026]

RIN 1218–AB47

Confined Spaces in Construction

AGENCY: Occupational Safety and Health Administration (OSHA), Labor.

ACTION: Notice of Proposed Rulemaking; extension of written comment period.

SUMMARY: On November 28, 2007, OSHA published a Notice of Proposed Rulemaking (NPRM) titled ''Confined Spaces in Construction.'' The period for submitting written comments is being extended 30 days to allow parties affected by the rule more time to review the proposed rule and collect information and data necessary for comments.

DATES: Comments must be submitted (postmarked or sent) by February 28, 2008.

ADDRESSES: You may submit written comments, identified by Docket No. OSHA–2007–0026, by any of the following methods:

Electronically: You may submit comments and attachments electronically at *http://www.regulations.gov,* which is the Federal eRulemaking Portal. Follow the instructions online for making electronic submissions.

Fax: If your comments, including attachments, do not exceed 10 pages, you may fax them to the OSHA Docket Office at (202) 693–1648.

Mail, hand delivery, express mail, messenger or courier service: You must submit three copies of your comments and attachments to the OSHA Docket Office, Docket No. OSHA–2007–0026, U.S. Department of Labor, Room N–2625, 200 Constitution Avenue, NW., Washington, DC 20210; telephone (202) 693–2350 (OSHA's TTY number is (877) 889–5627). Deliveries (hand, express mail, messenger and courier service) are accepted during the Department of Labor's and Docket Office's normal business hours, 8:15 a.m.–4:45 p.m., E.T.

Instructions: All submissions must include the Agency name and the docket number for this rulemaking (Docket No. OSHA–2007–0026). All comments, including any personal information you provide, are placed in the public docket without change and may be made available online at *http://www.regulations.gov.* Therefore, OSHA cautions you about submitting personal information such as social security numbers and birthdates. For further information on submitting comments, plus additional information on the rulemaking process, see the **SUPPLEMENTARY INFORMATION** section of this document.

Docket: To read or download comments and materials submitted in response to this **Federal Register** notice, go to Docket No. OSHA–2007–0026 at *http://www.regulations.gov* or at the OSHA Docket Office at the above address. All comments and submissions are listed in the *http://www.regulations.gov* index; however, some information (e.g., copyrighted material) is not publicly available to read or download through that Web page. All comments and submissions, including copyrighted material, are available for inspection and copying at the OSHA Docket Office.

For information on accessing exhibits referenced in the Confined Spaces in Construction proposal, see the ''Public Participation'' heading in the **SUPPLEMENTARY INFORMATION** section of this document.

Electronic copies of this **Federal Register** document are available at *http://www.regulations.gov.* Copies also are available from the OSHA Office of Publications, Room N–3101, U.S. Department of Labor, 200 Constitution Avenue, NW., Washington, DC 20210; telephone (202) 693–1888. This document, as well as news releases and other relevant information, also are available at OSHA's Web page at *http://www.osha.gov.*

FOR FURTHER INFORMATION CONTACT: *General information and press inquiries:* Contact Mr. Kevin Ropp, Office of Communications, Room N–3647, OSHA, U.S. Department of Labor, 200 Constitution Avenue, NW., Washington, DC 20210; telephone (202) 693–1999.

Technical inquiries: Contact Mr. Garvin Branch, Directorate of Construction, Room N–3468, OSHA, U.S. Department of Labor, 200 Constitution Avenue, NW., Washington, DC 20210; telephone (202) 693–2020 or fax (202) 693–1689.

SUPPLEMENTARY INFORMATION:

I. Extension of Comment Period

On November 28, 2007, at 72 FR 67351, OSHA published a Notice of Proposed Rulemaking (NPRM) titled ''Confined Spaces in Construction.'' In this NPRM, OSHA announced a proposed rule for confined spaces in construction; provided an explanation of the rule and its economic analysis; and solicited comments from the public regarded various confined-spaces issues. The period for submitting written comments was to expire on January 28, 2008. However, the following associations have requested a 60-day extension for submitting their written comments and information: The National Association of Home Builders (NAHB), the National Utility Contractors Association (NUCA), and the Associated Builders and Contractors Association (ABC). The NAHB cites as reasons for its request the complexity of the rule and its need for additional time to enable them to consult with their members. The ABC cites these reasons and notes that the comment period coincided with the holiday season, which made it more difficult for ABC to survey its members on the NPRM.

OSHA believes that a 30-day extension will be sufficient to accommodate these considerations, facilitate the submission of more thorough reviews, and provide OSHA with a complete record for this

proposed rule. Accordingly, the comment period has been extended by 30 days and written comments must now be submitted (sent or postmarked) by February 28, 2008.

II. Submission of Comments and Access to Comments

You may submit comments in response to this document (1) electronically at *http://www.regulations.gov*, which is the Federal eRulemaking Portal; (2) by facsimile (FAX); or (3) by hard copy. All comments, attachments and other material must identify the Agency name and the OSHA docket number for this rulemaking (Docket No. OSHA–2007–0026). You may supplement electronic submissions by uploading document files electronically. If, instead, you wish to mail additional materials in reference to an electronic or fax submission, you must submit three copies to the OSHA Docket Office (see **ADDRESSES** section). The additional materials must clearly identify your electronic comments by name, date, and docket number so OSHA can attach them to your comments.

Because of security-related procedures, the use of regular mail may cause a significant delay in the receipt of comments. For information about security procedures concerning the delivery of materials by hand, express delivery, messenger or courier service, please contact the OSHA Docket Office (see **ADDRESSES** section).

Comments and submissions in response to this **Federal Register** notice are posted without change at *http://www.regulations.gov* (Docket No. OSHA–2007–0026). Therefore, OSHA cautions commenters about submitting personal information such as social security numbers and date of birth.

Although all submissions in response to this **Federal Register** notice and all supporting materials cited in the Confined Spaces in Construction proposal are listed in the *http://www.regulations.gov* and *http://dockets.osha.gov* indexes, some information (e.g., copyrighted material) is not publicly available to read or download from that Web page. All submissions and supporting materials, including copyrighted material, are available for inspection and copying at the OSHA Docket Office.

Information on using the *http://www.regulations.gov* Web page to submit comments is available at the Web page's User Tips link. Contact the OSHA Docket Office for information about materials not available through the Web pages and for assistance in using the Internet to locate docket submissions.

Electronic copies of this **Federal Register** document are available at *http://www.regulations.gov*. This document, as well as news releases and other relevant information, also are available at OSHA's Web page at *http://www.osha.gov*.

Authority and Signature

This document was prepared under the authority of Edwin G. Foulke, Jr., Assistant Secretary of Labor for Occupational Safety and Health, U.S. Department of Labor, 200 Constitution Avenue, NW., Washington, DC 20210, pursuant to Sections 4, 6, and 8 of the OSH Act of 1970 (29 U.S.C. 653, 655, 657), Secretary of Labor's Order 5–2007 (72 FR 31159), and 29 CFR part 1911.

Signed at Washington, DC this 17th day of January, 2008.

Edwin G. Foulke, Jr.,

Assistant Secretary of Labor for Occupational Safety and Health.

[FR Doc. E8–1081 Filed 1–22–08; 8:45 am]

BILLING CODE 4510–26–P

DEPARTMENT OF THE INTERIOR

Office of Surface Mining Reclamation and Enforcement

30 CFR Part 916

[Docket No. OSM–2008–0001; Sats No. KS–024–FOR]

Kansas Regulatory Program

AGENCY: Office of Surface Mining Reclamation and Enforcement, Interior.

ACTION: Proposed rule; public comment period and opportunity for public hearing on proposed amendment.

SUMMARY: We, the Office of Surface Mining Reclamation and Enforcement (OSM), are announcing receipt of a proposed amendment to the Kansas regulatory program (Kansas program) under the Surface Mining Control and Reclamation Act of 1977 (SMCRA or the Act). Kansas proposes revisions to its 2002 Kansas Revegetation Guidelines and its Normal Husbandry Practices. Kansas intends to update obsolete information used in determining the forage production success standard for warm season native grasses. Kansas also proposes to update their normal husbandry practices to increase clarity and to update references to other Agencies technical guidelines. These documents give the times and locations that the Kansas programs and proposed amendments to that program are available for your inspection, the comment period during which you may submit written comments on the amendments, and the procedures that we will follow for the public hearing, if one is requested.

DATES: We will accept written comments on this amendment until 4 p.m., c.d.t., February 22, 2008. If requested, we will hold a public hearing on the amendment on February 19, 2008. We will accept requests to speak at a hearing until 4 p.m., c.d.t. on February 7, 2008.

ADDRESSES: You may submit comments, identified by Docket No. OSM–2008–0001, by any of the following methods:

- Mail/Hand Delivery: Alfred L. Clayborne, Director, Tulsa Field Office, Office of Surface Mining Reclamation and Enforcement, 1645 South 101 St East Avenue, Tulsa, Oklahoma 74128.
- Federal eRulemaking Portal: *http://www.regulations.gov*. The proposed rule has been assigned Docket ID: OSM–2008–0001. If you would like to submit comments through the Federal eRulemaking Portal, go to *www.regulations.gov* and do the following. Click on the ''Advanced Docket Search'' button on the right side of the screen. Type in the Docket ID (OSM–2008–0001) and click the ''Submit'' button at the bottom of the page. The next screen will display the Docket Search Results for the rulemaking. If you click on OSM–2008–0001, you can view the proposed rule and submit a comment. You can also view supporting material and any comments submitted by others.

Instructions: For detailed instructions on submitting comments and additional information on the rulemaking process, see the ''Public Comment Procedures'' heading of the **SUPPLEMENTARY INFORMATION** section of this document.

Docket: In addition to obtaining copies of documents at *www.regulations.gov*, you may review copies of the Kansas program, this amendment, a listing of any scheduled public hearings, and all written comments received in response to this document, at the address listed below during normal business hours, Monday through Friday, excluding holidays. You may receive one free copy of the amendment by contacting OSM's Tulsa Field Office. Alfred L. Clayborne, Director, Tulsa Field Office, Office of Surface Mining Reclamation and Enforcement, 1645 South 101 St East Avenue, Tulsa, Oklahoma 74128–6547, Telephone: (918) 581–6430, E-mail: *aclayborne@osmre.gov*.

In addition, you may review a copy of the amendment during regular business

hours at the following location: Kansas Department of Health and Environment, Surface Mining Section, 4033 Parkview Drive, Frontenac, Kansas 66763, Telephone: (316) 231–8540.

FOR FURTHER INFORMATION CONTACT: Alfred L. Clayborne, Director, Tulsa Field Office. Telephone: (918) 581–6430. E-mail: *aclayborne@osmre.gov*.

SUPPLEMENTARY INFORMATION:

I. Background on the Kansas Program
II. Description of the Proposed Amendment
III. Public Comment Procedures
IV. Procedural Determinations

I. Background on the Kansas Program

Section 503(a) of the Act permits a State to assume primacy for the regulation of surface coal mining and reclamation operations on non-Federal and non-Indian lands within its borders by demonstrating that its program includes, among other things, ''* * * a State law which provides for the regulation of surface coal mining and reclamation operations in accordance with the requirements of this Act * * *; and rules and regulations consistent with regulations issued by the Secretary pursuant to this Act.'' See 30 U.S.C. 1253(a)(1) and (7). On the basis of these criteria, the Secretary of the Interior conditionally approved the Kansas program on January 21, 1981. You can find background information on the Kansas program, including the Secretary's findings, the disposition of comments, and the conditions of approval, in the January 21, 1981, **Federal Register** (46 FR 5892). You can also find later actions concerning the Kansas program and program amendments at 30 CFR 916.10, 916.12, 916.15, and 916.16.

II. Description of the Proposed Amendment

By letter dated November 19, 2007 (Administrative Record No. 626 and 627), Kansas sent us amendments to its program under SMCRA (30 U.S.C. 1201, *et seq.*). Kansas sent the amendments in one package, identifying the Revegetation Success Guidelines as KS–024–FOR and the Normal Husbandry Practices as KS–025–FOR. We have combined these both under one docket number (KS–024–FOR). Kansas submitted these amendments at their own initiative. Below is a summary of the changes proposed by Kansas. The full text of the program amendments are available for you to read at the locations listed above under **ADDRESSES**.

Kansas determined that a portion of its currently approved 2002 Revegetation Guidelines contains information that needs to be updated. During a review of its revegetation guidelines, the State found that Appendix C, USDA–SCS Technical Guide Notice KS–145 (KS–415) lists an animal unit month (AUM) value that yields an extremely low production rate. The AUM value is used to calculate the forage production success standard for warm season native grasses. Upon discovering this, Kansas contacted the USDA Natural Resources Conservation Service (NRCS) who informed the State that KS–415 is now considered obsolete. Because of this, Kansas proposes to no longer allow Kansas coal operators to use KS–415 in determining the forage production success standard for warm season native grasses only. Kansas coal operators will continue to use KS–415 for determining forage production success standards for wheat, grain sorghum, and soybeans. In order to calculate the forage production success standard for any area seeded to warm season native grasses where the postmining land use requires both cover and production data, Kansas proposes to replace KS–415 with the NRCS's ''Electronic Field Office Technical Guides'' for rangeland, grazed forestland, and native pastureland interpretations for Linn, Crawford, Cherokee, and Bourbon Counties. Kansas also proposes that the forage production success standard established in each permit be based on the total dry weight production listed for an average year.

Kansas Department of Health and Environment (KDHE) proposes to update the approved selected husbandry practices which are considered to be normal in Kansas. Utilization of these practices will not result in the KDHE mandating an extension to the period of responsibility for revegetation success and bond liability. The probability of permanent revegetation failure will not be increased if the approved practices are discontinued after expiration of the liability period. Kansas suggests that the proposed practices are considered normal husbandry practices within the region for unmined lands having land uses similar to the approved postmining land use of the disturbed area. They include such practices as mowing, liming, fertilization, disease, pest and vermin control; and any pruning, reseeding, and transplanting specifically necessitated by such actions. Practices not approved, and which will result in an extension of the liability period, include any seeding, fertilization, or irrigation performed at levels which exceed those normally applied in maintaining comparable unmined land in the surrounding area.

In determining what is an approved selective husbandry practice, evaluations shall include Surface Mining Section (SMS) Professional Judgments, the incorporation of guidelines provided by approved source documents, and information provided by Kansas State University (KSU) and the United States Department of Agriculture, Natural Resources Conservation Service (NRCS). Both NRCS and KSU have established and published many recommended fertility and management practices for row crops, hayland, and grazingland tailored for soil conditions, crop rotations, tillage and application practices.

If this amendment is approved, the SMS will compare the proposed management practices on mined land with recommended practices provided by KSU and NRCS to determine if the mined land practices can be considered normal husbandry. Through the routine inspection process, the SMS will monitor liability start dates, liming and fertilization activities and evaluate and determine the success of the reclamation. If the SMS determines site specific management practices are outside the normal husbandry practices, a decision will be made whether or not the liability period must restart.

On all lands with a postmining land use in perennial cover, the SMS shall consider limited reseeding and associated fertilization and liming as non-augmentative if the cumulative area is small. Reseeding of small areas without restarting the period of operation responsibility shall be left up to the judgment of the SMS in conjunction with the NRCS or KSU Extension Agriculture Service and in no case shall the cumulative areas reseeded be greater than 3 acres or 10% of the permit area whichever is less. Exceptions to this maximum size may be made if the area is comprised of a waterway, terrace or other water control structures. In all cases, the reestablished vegetation shall be in place for a sufficient length of time to not adversely affect the SMS's ability to make a valid determination at the time of bond release as to whether the site has been properly reclaimed.

Approved normal husbandry practices conducted in consultation with KSU or NRCS are not considered augmentation. Evidence of consultation may be required by the SMS. Practices listed in the following documents are approved:

Kansas State University Publications,

Established Native Grasses, October 1997

Native Hay Meadow Management, July 1992
Trees and Shrubs for Difficult Sites, February 2006
Fertilization Trees, May 2001
Chemical Weed Control in Tree Planning, March 2001
Weed Control Options in Tree Planting, February 2006
Tree Planting Guide, June 2004
Tall Planting Guide, June 2004
Tall Fescue Production and Utilization, April 1994
Maintaining Grass Waterways, April 2004
Rangeland Weed Management, December 1991

United States Department of Agriculture (USDA) Natural Resources Conservation Service (NRCS) Conservation Practice Standards

314 Brush Management
322 Channel Bank Vegetation
327 Conservative cover
656 Constructive Wetland
332 Contour Buffer Strips
340 Cover Crop
341 Critical Area Planting
362 Diversion
647 Early Successional Habitat Development/Management
386 Field Boarder
393 Filter Strip
511 Forage Harvest Management
666 Forest Stand Improvement
412 Grassed Waterway
484 Mulching
590 Nutrient Management
512 Pasture and Hay Planting
595 Pest Management
338 Prescribed Burning
528 Prescribed Grazing
550 Range Planting
329B Residue Management, Mulch Till
329A Residue Management, No Till/Strip Till
344 Residue Management, Seasonal
391 Riparian Forest Buffer
656 Shallow Water Management for Wildlife
580 Streambank and Shoreline protection
600 Terrace
612 Tree/Shrub Establishment
660 Tree/Shrub Pruning
645 Upland Wildlife Habitat Management
644 Wetland Wildlife Habitat Management
380 Windbreak/Shelterbelt Establishment

Kansas Forestry Technical Note KS–9 Tree/Shrub Establishment and Maintenance Guidelines

The repair of rills and gullies will not be allowed in the State of Kansas without restarting the revegetation liability period, unless the occurrences and the treatment of such rills and gullies constitutes a normal conservation practice in the region as described below:

In the coal mining region of Kansas, the normal range of precipitation during fall or spring seeding seasons may result in the formation of rills and gullies during the initial establishment of a permanent vegetation cover for any land use. The NRCS has prepared guidelines for the treatment of rills and gullies as part of their critical areas planting (CAP) process. The SMS has determined that the NRCS CAP for the treatment of rills and gullies in the coal mining regions of Kansas constitutes the treatment practice which is the usual degree of management customarily performed to prevent exploitation, destruction or neglect of the soil resources and maintain the productivity of the land uses. This treatment would not be considered an augmented practice because the NRCS guidance is the standard development for the normal treatment of rills and gullies that may develop during the initial establishment of a permanent cover of vegetation on unmined lands in Kansas. If the use of the NRCS guidelines to control rills and gullies under CAP does not stop erosion, any continued treatment of rills and gullies after the initial vegetative establishment would be considered an augmented practice that would restart the liability period. In addition, the KDHE SMS defines the treatment of rills and gullies requiring a permanent reseeding of more than 10 acres in a contiguous block, or 10 percent of the permit area initially seeded during a single year, to be an augmented practice because of the potential for delay of seeding large area to reduce the probability of revegetation success.

CAP requires active furrows, rills, ditches, or gullies be filled to aid the conservation practices application. The rills and gullies should be filled with topsoil, if the eroding site is not large, or contoured and/or smoothed if the site is large. The area must be seeded during the appropriate seeding season with approved perennial species followed by an application of mulch. If permanent seeding of the area must be delayed due to weather condition, then appropriate temporary erosion control measures must be utilized. Mulch that is to be applied must be free of noxious weeds including Johnson grass and sericea lespedeza, anchored during or immediately after application, and be applied at the following rates:

1. *Native hay or straw:* Apply at the rate of 2 tons/acre and crimp into the soil. Native hay mulch should be less than two (2) years old. Where appropriate based on surrounding vegetation, cool season (fescue) hay may be used. Apply at the rate of 2 tons/acre and crimp into the soil.

2. *Wood chips:* Apply at the rate of 11–15 tons/acre.

3. *Strawy manure:* Apply at the rate of 10 tons/acre. Strawy manure need not be anchored if it contains heavy solids.

The use of fabric, hay bales, and/or designed rock riprap structure to fill or repair rills and gullies will be approved on a case-by-case basis. Monitoring of these areas will be required to assure that the treatment provides long-term erosion control, does not disrupt the post mining land use, and that the permanent vegetation becomes established. If this treatment is not effective, then filling of the rills and gullies with topsoil and revegetation will be required. Depending on site conditions, terracing, erosion control fabric, wattles, or other measures may be needed to control erosion until vegetation is established. If the drainage area is of a sufficient size to create continued problems with rills and gullies, the operator will install terraces to control the amount and/or velocity of water moving across the area. These terraces will be designed and constructed in accordance with K.A.R. 47–9–(c)(9).

Liming, fertilization, mulching, seeding or stocking (stems) following the reclamation of any temporary roads, temporary sediment or hydraulic control structures, or areas where the vegetation was disturbed by vehicular traffic not under the control of the permittee shall not be considered augmentation.

Reliming and/or refertilization of revegetated areas, reseeding cropland in annual crops; or renovating pastureland or cropland areas in perennial cover by over seeding with legumes after a phase II bond release shall be considered normal husbandry practices and shall not restart the liability period if the amount and frequency of these practices do not exceed normal husbandry practices used on unmined land within the region. Other normal husbandry practices that my be conducted on postmining land uses of fish and wildlife habitat, recreation, and forestry without restarting the liability period are disease, pest, and vermin control; and any pruning, reseeding, and transplanting specifically necessitated by such actions. Replanting more than 20% of the trees/shrubs needed to meet the established technical success will restart the 5-year liability time clock. Trees and shrubs counted in determining the success of stocking

shall be healthy and have been in place for not less than two growing seasons. At the time of bond release, at least 80% of the trees and shrubs used to determine such success shall have been in place for a minimum of three years.

III. Public Comment Procedures

Under the provisions of 30 CFR 732.17(h), we are seeking your comments on whether the amendment satisfies the applicable program approval criteria of 30 CFR 732.15. If we approve the amendment, it will become part of the State program.

Written Comments

Send your written or electronic comments to OSM at one of the two addresses given above. Your written comments should be specific, pertain only to the issues proposed in this rulemaking, and include explanations in support of your recommendations. We cannot ensure that comments received after the close of the comment period (see **DATES**) or sent to an address other than the two listed above will be included in the docket for this rulemaking and considered.

Availability of Comments

Before including your address, phone number, e-mail address, or other personal identifying information in your comment, you should be aware that your entire comment—including your personal identifying information—may be made publicly available at any time. While you can ask us in your comment to withhold your personal identifying information from public review, we cannot guarantee that we will be able to do so.

Public Hearing

If you wish to speak at the public hearing, contact the person listed under **FOR FURTHER INFORMATION CONTACT** by 4 p.m., c.d.t. on February 7, 2008. If you are disabled and need reasonable accommodations to attend a public hearing, contact the person listed under **FOR FURTHER INFORMATION CONTACT**. We will arrange the location and time of the hearing with those persons requesting the hearing. If no one requests an opportunity to speak, we will not hold a hearing.

To assist the transcriber and ensure an accurate record, we request, if possible, that each person who speaks at the public hearing provide us with a written copy of his or her comments. The public hearing will continue on the specified date until everyone scheduled to speak has been given an opportunity to be heard. If you are in the audience and have not been scheduled to speak and wish to do so, you will be allowed to speak after those who have been scheduled. We will end the hearing after everyone scheduled to speak and others present in the audience who wish to speak, have been heard.

Public Meeting

If only one person requests an opportunity to speak, we may hold a public meeting rather than a public hearing. If you wish to meet with us to discuss the amendment, please request a meeting by contacting the person listed under **FOR FURTHER INFORMATION CONTACT**. All such meetings are open to the public and, if possible, we will post notices of meetings at the locations listed under **ADDRESSES**. We will make a written summary of each meeting a part of the administrative record.

IV. Procedural Determinations

Executive Order 12630—Takings

This rule does not have takings implications. This determination is based on the analysis performed for the counterpart Federal regulation.

Executive Order 12866—Regulatory Planning and Review

This rule is exempted from review by the Office of Management and Budget (OMB) under Executive Order 12866.

Executive Order 12988—Civil Justice Reform

The Department of the Interior has conducted the reviews required by section 3 of Executive Order 12988 and has determined that this rule meets the applicable standards of subsections (a) and (b) of that section. However, these standards are not applicable to the actual language of State regulatory programs and program amendments because each program is drafted and promulgated by a specific State, not by OSM. Under sections 503 and 505 of SMCRA (30 U.S.C. 1253 and 1255) and the Federal regulations at 30 CFR 730.11, 732.15, and 732.17(h)(10), decisions on proposed State regulatory programs and program amendments submitted by the States must be based solely on a determination of whether the submittal is consistent with SMCRA and its implementing Federal regulations and whether the other requirements of 30 CFR parts 730, 731, and 732 have been met.

Executive Order 13132—Federalism

This rule does not have Federalism implications. SMCRA delineates the roles of the Federal and State governments with regard to the regulation of surface coal mining and reclamation operations. One of the purposes of SMCRA is to ''establish a nationwide program to protect society and the environment from the adverse effects of surface coal mining operations.'' Section 503(a)(1) of SMCRA requires that State laws regulating surface coal mining and reclamation operations be ''in accordance with'' the requirements of SMCRA, and section 503(a)(7) requires that State programs contain rules and regulations ''consistent with'' regulations issued by the Secretary pursuant to SMCRA.

Executive Order 13175—Consultation and Coordination With Indian Tribal Governments

In accordance with Executive Order 13175, we have evaluated the potential effects of this rule on Federally-recognized Indian tribes and have determined that the rule does not have substantial direct effects on one or more Indian tribes, on the relationship between the Federal Government and Indian tribes, or on the distribution of power and responsibilities between the Federal Government and Indian tribes. This determination is based on the fact that the Kansas program does not regulate coal exploration and surface coal mining and reclamation operations on Indian lands. Therefore, the Kansas program has no effect on Federally-recognized Indian tribes.

Executive Order 13211—Regulations That Significantly Affect the Supply, Distribution, or Use of Energy

On May 18, 2001, the President issued Executive Order 13211 which requires agencies to prepare a Statement of Energy Effects for a rule that is (1) considered significant under Executive Order 12866, and (2) likely to have a significant adverse effect on the supply, distribution, or use of energy. Because this rule is exempt from review under Executive Order 12866 and is not expected to have a significant adverse effect on the supply, distribution, or use of energy, a Statement of Energy Effects is not required.

National Environmental Policy Act

This rule does not require an environmental impact statement because section 702(d) of SMCRA (30 U.S.C. 1292(d)) provides that agency decisions on proposed State regulatory program provisions do not constitute major Federal actions within the meaning of section 102(2)(C) of the National Environmental Policy Act (42 U.S.C. 4332(2)(C)).

Paperwork Reduction Act

This rule does not contain information collection requirements that require approval by OMB under the Paperwork Reduction Act (44 U.S.C. 3507, *et seq.*).

Regulatory Flexibility Act

The Department of the Interior certifies that this rule will not have a significant economic impact on a substantial number of small entities under the Regulatory Flexibility Act (5 U.S.C. 601, *et seq.*). The State submittal, which is the subject of this rule, is based upon counterpart Federal regulations for which an economic analysis was prepared and certification made that such regulations would not have a significant economic effect upon a substantial number of small entities. In making the determination as to whether this rule would have a significant economic impact, the Department relied upon the data and assumptions for the counterpart Federal regulations.

Small Business Regulatory Enforcement Fairness Act

This rule is not a major rule under 5 U.S.C. 804(2), the Small Business Regulatory Enforcement Fairness Act. This rule: (a) Does not have an annual effect on the economy of $100 million; (b) Will not cause a major increase in costs or prices for consumers, individual industries, Federal, State, or local government agencies, or geographic regions; and (c) Does not have significant adverse effects on competition, employment, investment, productivity, innovation, or the ability of U.S.-based enterprises to compete with foreign-based enterprises. This determination is based upon the fact that the State submittal, which is the subject of this rule, is based upon counterpart Federal regulations for which an analysis was prepared and a determination made that the Federal regulation was not considered a major rule.

Unfunded Mandates

This rule will not impose an unfunded mandate on State, local, or tribal governments or the private sector of $100 million or more in any given year. This determination is based upon the fact that the State submittal, which is the subject of this rule, is based upon counterpart Federal regulations for which an analysis was prepared and a determination made that the Federal regulation did not impose an unfunded mandate.

List of Subjects in 30 CFR Part 916

Intergovernmental relations, Surface mining, Underground mining.

Dated: December 26, 2007.

Len Meier,

Acting Regional Director, Mid-Continent Region.

[FR Doc. E8–1113 Filed 1–22–08; 8:45 am]

BILLING CODE 4310–05–P

LIBRARY OF CONGRESS

Copyright Office

37 CFR Part 201

[Docket No. RM 2008–1]

Recordation of Notices of Termination of Transfers and Licenses; clarifications

AGENCY: Copyright Office, Library of Congress.

ACTION: Notice of Proposed Rulemaking.

SUMMARY: The Copyright Office is proposing to make clarifications to its regulations governing the recordation of notices of termination and certain related provisions. This notice seeks public comment on the proposed amendments, which would communicate the Office's practices as to notices of termination that are untimely filed; clarify the fact that a notice of termination is not legally sufficient simply because it has been recorded; update the legibility requirements for all recorded documents, including notices of termination; make minor explanatory edits to the fee schedule for multiple titles within a document (adding notices of termination as an example); and create a new mailing address to which notices of termination should be sent.

DATES: Written comments are due February 22, 2008. Reply comments are due March 24, 2008.

ADDRESSES: If hand delivered by a private party, an original and five copies of any comment should be brought to Room LM–401 of the James Memorial Building between 8:30 a.m. and 5 p.m. and the envelope should be addressed as follows: Office of the General Counsel, U.S. Copyright Office, James Madison Memorial Building, Room LM–401, First and Independence Avenue, SE, Washington, DC 20559–6000.

If hand delivered by a commercial courier, an original and five copies of any comment must be delivered to the Congressional Courier Acceptance Site located at Second and D Streets, NE, Washington, DC, between 8:30 a.m. and 4 p.m. The envelope should be addressed as follows: Office of the General Counsel, U.S. Copyright Office, Room LM–403, James Madison Memorial Building, First and Independence Avenue, SE, Washington, DC 20559–6000.

If sent by mail, an original and five copies of any comment should be addressed to: Copyright GC/I&R, P.O. Box 70400, Washington, DC 20024. Comments may not be delivered by means of overnight delivery services such as Federal Express, United Parcel Service or DHL, due to delays in processing receipt of such deliveries.

FOR FURTHER INFORMATION CONTACT: Maria Pallante, Deputy General Counsel, Copyright GC/I&R, P.O. Box 70400, Washington, DC 20024. Telephone (202) 707–8380. Fax (202) 707–8366.

SUPPLEMENTARY INFORMATION:

Background

In addition to its legal, regulatory and policy responsibilities, the Copyright Office is an office of public record which receives and records documents that pertain to copyright. Such documents include notices of termination, which may be served by authors (and some heirs of authors) to extinguish certain exclusive or nonexclusive grants of transfers or licenses of copyright or the divisible rights thereunder.

The termination provisions are set forth in Sections 304(c), 304(d) and 203 of the 1976 Copyright Act, Title 17 of the United States Code. The provisions have an equitable function; they exist to allow authors or their heirs a second opportunity to share in the economic success of their works. The House Report accompanying the 1976 Copyright Act states that the provisions are ''needed because of the unequal bargaining position of authors, resulting in part from the impossibility of determining a work's value until it has been exploited.'' H.R. Rep. No. 94–1476, at 124 (1976). The law provides for termination according to the time table and prescription set forth in each respective section, including mandatory, timely recordation with the Copyright Office.[1]

Section 304(c) governs any work in which the copyright was subsisting in its first or renewal term as of January 1, 1978, and provides for termination of a grant at any time during a period of five years beginning at the end of fifty–six years from the date copyright was originally secured. Section 304(d) provides a termination right for a subset of works for which the termination right

[1]The provisions exclude grants made by will and works for hire.

expired on or before the effective date (October 27, 1998) of the ''Sonny Bono Copyright Term Extension Act,'' which extended the copyright term by 20 years. Section 304(d) allows an author, or certain heirs and successors, to terminate the grant of a transfer or license of the renewal copyright or any right under it, at anytime during a five year period beginning at the end of 75 years from the date copyright was originally secured.[2] Section 203 governs works created on or after January 1, 1978. The author, or certain heirs and successors, may terminate any grant made on or after this date at any time during a period of five years beginning at the end of thirty–five years from the date of publication of the work under the grant or at the end of forty years from the date of execution of the grant, whichever term ends earlier. In contrast to the provisions of Section 304, termination under Section 203 is possible only if the author executed the grant.

The termination provisions are not self–executing. On the contrary, they are formalistic and include several conditions precedent. For example, the provisions require that the author (or if the author is deceased, the author's widow, widower, children or other heirs specified by statute) serve the notice of termination in writing on a grantee or the grantee's successor in title prior to the effective date of termination which, as referenced above, must fall within a five–year window prescribed by the statutory section. Moreover, the notice must state the effective date of the termination and must be served not less than two or more than ten years before the effective date. And, as a condition of the termination taking effect, a copy of the notice of termination must be recorded with the Copyright Office prior to the effective date of termination. 17 U.S.C. 304(c)(4); 304(d)(1); 203(a)(4).

The process and other formal requirements for submitting a copy of the notice to the Copyright Office for recordation are prescribed by regulation and addressed herein. In short, the regulations require the recording party to submit a complete and exact duplicate of the notice that he or she served on the grantee or grantee's successor–in–title. The copy must include either actual signatures or reproductions of signatures, a statement setting forth the date the notice was served, an indication of the manner of service, and submission of the appropriate filing fee. The Copyright Office reviews for each of the above–referenced elements and may refuse recordation in the event any one element is missing. 37 CFR 201.10(f).

The requirements of the Copyright Office with respect to document legibility, fee schedule and mailing address are also prescribed by regulation and addressed herein. 37 CFR 201.4(c)(3); 201.3; 201.1.

Summary of Proposed Amendments

Timeliness of Notices of Termination

Under the law, the failure to file a notice of termination in a timely manner is a fatal mistake that cannot be construed as an immaterial, harmless error. 37 CFR 201.10(e). Thus, before recording a notice, the Copyright Office looks for confirmation that the relevant statutory deadlines have been met. Because the Office's practice in this regard is not currently stated in the regulations, the proposed amendments would introduce a new, explanatory paragraph.

In summary, if in the judgment of the Office the document is untimely, the Office will take one of two actions. If the notice is premature, the Office will return it with an explanation, so that it may be resubmitted within the proper statutory window. On the other hand, if the document is late, the Office will offer only to record and index the document as a ''document pertaining to copyright.'' 17 U.S.C. 205(a); 37 CFR 201.4(a)(2). It will not accept the document as a ''notice of termination,'' meaning that it will not be specially indexed as such. Whether such general recordation by the Copyright Office will be sufficient in any particular instance to effect termination as a matter of law is an issue that only the courts may resolve.

Recordation as Distinguished from Legal Sufficiency

By way of clarification, the fact that the Office has recorded a document as a notice of termination does not necessarily mean that the notice is legally sufficient to effect termination. In fact, recordation is without prejudice to any party claiming that the legal and formal requirements for issuing a valid notice have not been met. This denotation already appears in the regulations, but the proposed amendment would rephrase the existing language to provide greater clarity.

Legibility of Notices of Termination and Other Documents Pertaining to Copyright

With regard to legibility (an issue that affects not only notices of termination but all documents submitted for recordation), the amendments would make a change that is relatively minor but which would nonetheless underscore the mission of the Copyright Office as an office of public record. The current legibility requirement has two prongs, one that applies to the content of the original document and one that applies to its technical quality: ''a document must be legible and capable of being reproduced in legible microform copies.'' (Emphasis added.) 37 CFR 201.4(c)(3).

No change is proposed as to the first prong. When the Office records a document, it creates an index for the public that reflects the nature of the document and is searchable by certain key information contained in the document, e.g. the title of a work. If the content is indecipherable or difficult to read, the Office cannot create an accurate index. In addition, with respect to copyrighted works, a document that is recorded in the Office provides constructive notice as to the facts stated in the recorded document, provided that identification of the work is such that, after the document is indexed by the Office, it would be reasonably revealed under the title or registration number of the work; and provided that registration has been made for the work. 17 U.S.C. 205(c). Again, if the facts of the document are indecipherable, there can be no accurate indexing, thus preventing the possibility of constructive notice, nor will an illegible document prevail in the event of a conflicting claim of transfer. 17 U.S.C. 205(d).

As to the second prong, the amendment would make a small change by deleting the outdated reference to ''microform copies'' and replacing it with a broader, more flexible standard. If a document is faded, faint, or similarly difficult to see, the Office may be unable to successfully reproduce it for the public record. Thus, the amended regulation would require that documents be ''legible and *capable of being imaged or otherwise reproduced in legible copies by the technology employed by the Office at the time of submission.''* (Emphasis added.)

Fee Requirements for Notices of Termination

With respect to fees, it is the Copyright Office's experience that parties who submit notices of termination for recordation sometimes miscalculate the amount due, especially where grants of rights in multiple works are being terminated by virtue of one document. The proposed amendment would add the notice of termination as an express example in the schedule of

[2]The provisions do not apply if the termination right under Section 304(c) was previously exercised.

fees under section 201.3(c)(16), specifying that the basic fee for recordation of a notice of termination containing a single title is $95, and the fee for recordation of a notice of termination containing more than one title is an additional $25 per group of 10 titles.

Mailing Address for Notices of Termination

Finally, because notices of termination are time–sensitive, a delay in processing may have serious consequences. The proposed amendment would create a special post office box at the Copyright Office, from which notices of termination could more easily be sorted and routed for recordation. This revision would also delete the address for the Copyright Arbitration Royalty Panel (CARP). All CARP proceedings were terminated in 2007 and the reference is no longer valid. 72 FR 45071 (August 10, 2007).

Conclusion

We hereby seek comment from the public as to the issues identified herein associated with certain requirements of the Copyright Office under Sections 201.1, 201.3, 201.4 and 201.10 of Chapter 37 of the Code of Federal Regulations.

List of Subjects in 37 CFR Part 201

Copyright.

Proposed Regulations

For the reasons set forth in the preamble, the Copyright Office proposes to amend part 201 of title 37 of the Code of Federal Regulations as follows:

PART 201–GENERAL PROVISIONS

1. The authority citation for part 201 continues to read as follows:

Authority: 17 U.S.C. 702.

2. Revise § 201.1(b)(2) to read as follows:

§ 201.1 Communication with the Copyright Office.

* * * * *

(b) * * *

(2) *Notices of Termination.* Notices of termination submitted for recordation should be mailed to Copyright Office, Notices of Termination, P.O. Box 71537, Washington, DC 20024–1537.

§ 201.3 [Amended]

3. Amend § 201.3(c)(16) by removing the phrase, ''Recordation of document, including a Notice of Intention to Enforce (NIE)(single title),'' and adding in its place the phrase ''Recordation of document (single title), e.g. a Notice of Termination or a Notice of Intent to Enforce (NIE)''.

4. Revise § 201.4(c)(3) to read as follows:

§ 201.4 Recordation of transfers and certain other documents.

* * * * *

(c) * * *

(3) To be recordable, the document must be legible and capable of being imaged or otherwise reproduced in legible copies by the technology employed by the Office at the time of submission.

* * * * *

5. Section 201.10(f) is amended as follows:

a. By adding paragraph (f)(1)(iii);

b. By redesignating paragraph (f)(4) as (f)(5);

c. By adding paragraph (f)(4);

d. By revising redesignated paragraph (f)(5) and

e. By adding paragraph (f)(6).

The revisions and additions to § 201.10 read as follows:

§ 201.10 Notices of termination of transfers and licenses.

* * * * *

(f) * * *

(1) * * *

(iii) The copy submitted for recordation must be legible per the requirements of § 201.4(c)(3) of this part.

* * * * *

(4) Notwithstanding anything to the contrary in this section, the Copyright Office reserves the right to refuse recordation of a notice of termination if, in the judgment of the Copyright Office, such notice of termination is untimely. If a document is submitted as a notice of termination after the statutory deadline has expired, the Office will offer to record the document as a ''document pertaining to copyright'' pursuant to § 201.4(c)(3) of this part, but the Office will not index the document as a notice of termination. Whether a document so recorded is sufficient in any instance to effect termination as a matter of law shall be determined by a court of competent jurisdiction.

(5) The mere fact that a notice of termination has been recorded does not mean that it is legally sufficient. Recordation of a notice of termination by the Copyright Office is without prejudice to any party claiming that the legal and formal requirements for issuing a valid notice have not been met.

(6) Notices of termination should be submitted to the address specified in § 201.1(b)(2) of this part.

Dated: January 14, 2008

Marybeth Peters,

Register of Copyrights.

[FR Doc. E8–888 Filed 1–22–08; 8:45 am]

BILLING CODE 1410–30–S

ENVIRONMENTAL PROTECTION AGENCY

40 CFR Part 62

[EPA–R09–OAR–2007–1150; FRL–8518–9]

Disapproval of Plan of Nevada; Clean Air Mercury Rule; Extension of Comment Period

AGENCY: Environmental Protection Agency (EPA).

ACTION: Proposed rule; extension of comment period.

SUMMARY: EPA is extending the comment period for action proposed on December 13, 2007 (72 FR 70812) concerning disapproval of the Nevada State Plan to address the requirements of EPA's Clean Air Mercury Rule (CAMR).

DATES: Any comments on this proposal must arrive by March 13, 2008.

ADDRESSES: Submit comments, identified by docket number EPA–R09–OAR–2007–1150, by one of the following methods:

1. *Federal eRulemaking Portal: http://www.regulations.gov.* Follow the on-line instructions.

2. *E-mail: steckel.andrew@epa.gov.*

3. *Mail or deliver:* Andrew Steckel (Air-4), U.S. Environmental Protection Agency Region IX, 75 Hawthorne Street, San Francisco, CA 94105–3901.

Instructions: All comments will be included in the public docket without change and may be made available online at *www.regulations.gov,* including any personal information provided, unless the comment includes Confidential Business Information (CBI) or other information whose disclosure is restricted by statute. Information that you consider CBI or otherwise protected should be clearly identified as such and should not be submitted through *www.regulations.gov* or e-mail. *www.regulations.gov* is an ''anonymous access'' system, and EPA will not know your identity or contact information unless you provide it in the body of your comment. If you send e-mail directly to EPA, your e-mail address will be automatically captured and included as part of the public comment. If EPA cannot read your comment due to technical difficulties and cannot contact you for clarification, EPA may not be able to consider your comment.

Docket: The index to the docket for this action is available electronically at *www.regulations.gov* and in hard copy at EPA Region IX, 75 Hawthorne Street, San Francisco, California. While all documents in the docket are listed in the index, some information may be publicly available only at the hard copy location (e.g., copyrighted material), and some may not be publicly available in either location (e.g., CBI). To inspect the hard copy materials, please schedule an appointment during normal business hours with the contact listed in the **FOR FURTHER INFORMATION CONTACT** section.

FOR FURTHER INFORMATION CONTACT: Lily Wong, EPA Region IX, (415) 947–4114, *wong.lily@epa.gov.*

SUPPLEMENTARY INFORMATION: On December 13, 2007, EPA proposed to disapprove the State Plan submitted by Nevada on November 15, 2006. The State Plan is intended to address the requirements of EPA's Clean Air Mercury Rule, promulgated on May 18, 2005, and subsequently revised on June 9, 2006. EPA proposed to determine that the submitted Nevada State Plan does not meet certain Clean Air Mercury Rule requirements.

The proposed action provided a 45-day public comment period. In response to a request from Leo M. Drozdoff, Administrator of the Nevada Division of Environmental Protection, submitted by letter on January 3, 2008, EPA is extending the comment period for an additional 45 days.

Dated: January 9, 2008.

Wayne Nastri,

Regional Administrator, Region IX.

[FR Doc. E8–1117 Filed 1–22–08; 8:45 am]

BILLING CODE 6560–50–P

DEPARTMENT OF TRANSPORTATION

National Highway Traffic Safety Administration

49 CFR Part 571

[Docket No. 2007–0048]

RIN 2127–AJ44, RIN 2127–AJ49

Federal Motor Vehicle Safety Standards, Child Restraint Systems; Anthropomorphic Test Devices (Hybrid III 10-Year-Old and Hybrid III 6-Year-Old Child Dummies)

AGENCY: National Highway Traffic Safety Administration (NHTSA), Department of Transportation (DOT).

ACTION: Supplemental notice of proposed rulemaking (SNPRM).

SUMMARY: This document supplements NHTSA's notice of proposed rulemaking (NPRM) of August 31, 2005 that proposed to: (a) Expand the applicability of Federal Motor Vehicle Safety Standard (FMVSS) No. 213, *Child restraint systems,* to restraints recommended for children up to 80 pounds, and (b) require booster seats and other restraints to meet performance criteria when tested with a crash test dummy representative of a 10-year-old child. In Part 1 of this SNPRM, NHTSA is proposing a test procedure for positioning the 10-year-old child dummy in a child restraint, to reduce variation due to chin-to-lower neck contact that was exhibited by the dummy in sled tests conducted subsequent to the NPRM. Comments are also requested in Part 1 on some other changes or clarifications to the NPRM, proposed in response to the public comments. In Part 2 of this SNPRM, we likewise propose to add a seating procedure for positioning the Hybrid III 6-year-old dummy in a child restraint for FMVSS No. 213 compliance testing. Concerns about the variability in HIC measurements obtained by that test dummy have led NHTSA to postpone mandatory use of the dummy in agency compliance tests. The seating procedure will address this variability issue and facilitate the full use of the dummy as a compliance instrument.

DATES: You should submit your comments early enough to ensure that Docket Management receives them not later than March 24, 2008.

ADDRESSES: You may submit comments (identified by the DOT Docket ID Number above) by any of the following methods:

- *Federal eRulemaking Portal:* Go to *http://www.regulations.gov.* Follow the online instructions for submitting comments.
- *Mail:* Docket Management Facility: U.S. Department of Transportation, 1200 New Jersey Avenue, SE., West Building Ground Floor, Room W12–140, Washington, DC 20590–0001.
- *Hand Delivery or Courier:* West Building Ground Floor, Room W12–140, 1200 New Jersey Avenue, SE., between 9 a.m. and 5 p.m. ET, Monday through Friday, except Federal holidays.
- *Fax:* 202–493–2251.

Instructions: For detailed instructions on submitting comments and additional information on the rulemaking process, see the Public Participation heading of the **SUPPLEMENTARY INFORMATION** section of this document. Note that all comments received will be posted without change to *http://www.regulations.gov,* including any personal information provided. Please see the Privacy Act heading below.

Privacy Act: Anyone is able to search the electronic form of all comments received into any of our dockets by the name of the individual submitting the comment (or signing the comment, if submitted on behalf of an association, business, labor union, etc.). You may review DOT's complete Privacy Act Statement in the **Federal Register** published on April 11, 2000 (65 FR 19477–78).

Docket: For access to the docket to read background documents or comments received, go to *http://www.regulations.gov* or the street address listed above. Follow the online instructions for accessing the dockets.

FOR FURTHER INFORMATION CONTACT: For technical issues, you may call Dr. Roger Saul, Office of Rulemaking (*Telephone:* 202–366–1740) (Fax: 202–493–2990). For legal issues, you may call Ms. Deirdre Fujita, Office of Chief Counsel (*Telephone:* 202–366–2992) (Fax: 202–366–3820). You may send mail to these officials at the National Highway Traffic Safety Administration, U.S. Department of Transportation, 1200 New Jersey Avenue, SE., West Building, Washington, DC 20590.

SUPPLEMENTARY INFORMATION:

Table of Contents

Part 1. 10-Year-Old Child Test Dummy

I. Background
II. Summary of Responses to August 31, 2005 NPRM
III. Agency Follow Up
IV. Proposals or Requests for Comments on This SNPRM Relating to the HIII–10C Dummy
a. Dummy Positioning Procedures
b. Continued Use of the Weighted HIII–6-Year-Old Dummy
c. Head Support Surface
d. Housekeeping Measures

Part 2. Hybrid III 6-Year-Old Child Test Dummy

I. Background
II. Proposed Amendments Relating to the HIII–6C Dummy
III. Testing

Submission of Comments

Rulemaking Analyses and Notices

Part 1. 10-Year-Old Child Test Dummy

I. Background

On August 31, 2005, NHTSA issued an NPRM proposing: (a) To expand the applicability of FMVSS No. 213, *Child restraint systems,* to restraints recommended for children up to 80 pounds (lb); and (b) to require booster seats and other restraints to meet performance criteria when tested with a Hybrid III crash test dummy representative of a 10-year-old child (70 FR 51720; NHTSA Docket No. 21245).

The rulemaking proposal was part of an on-going agency initiative to enhance the safety of children in motor vehicle crashes. It also furthered Section 4(b) of Public Law 107–318, 116 Stat. 2772 (''Anton's Law''), which required the initiation of a rulemaking proceeding for the adoption of an anthropomorphic test device that simulates a 10-year-old child.[1]

The agency completed its evaluation of the suitability of the Hybrid III 10-year-old dummy in September 2004. Following the evaluation, NHTSA initiated rulemaking to adopt specifications and performance requirements for the test dummy into 49 CFR part 572 (notice of proposed rulemaking published July 13, 2005, 70 FR 40281; Docket No. NHTSA 2004–2005–21247), in addition to publishing the August 31, 2005 NPRM to incorporate the dummy into FMVSS No. 213.

Booster seats provide a seating platform which boosts the child to a position that enables the vehicle lap and shoulder belts to fit better. Without booster seats, children who are too small to be adequately restrained with the vehicle's lap and shoulder belt system are at higher risk of injury due to the belts' improper placement. The agency recommends that children who have outgrown their internal harnessed child restraint systems, but who cannot adequately fit a vehicle's lap and shoulder belt system, be properly restrained using booster seats until they are at least 4 feet 9 inches tall.

The August 31, 2005 NPRM addressed the view expressed by many in the child passenger safety community that efforts to increase booster seat use should go hand-in-hand with expanding the applicability of FMVSS No. 213 to all booster seats. In that way, this view maintains, the seating system that we recommend for older children will be closely assessed in the standard's rigorous dynamic test for adequate performance in a crash. FMVSS No. 213 currently applies to child restraint systems that are designed to restrain, seat, or position children who weigh 30 kg (65 lb) or less.[2] Booster seats recommended for children weighing up to 65 lb are now subject to FMVSS No. 213 testing, but they are currently tested[3] with a 52-lb 6-year-old instrumented child dummy for injury performance response criteria, and with a 62-lb weighted 6-year-old uninstrumented child dummy for structural integrity. The NPRM proposed to upgrade the test parameters by using the 78-lb (35 kg) instrumented Hybrid III 10-year-old dummy to test boosters recommended for children weighing up to 80 lb.[4] (The 10-year-old dummy is referred to as the ''HIII–10C dummy.'')

II. Summary of Responses to August 31, 2005 NPRM

The agency received 11 comments on the August 31, 2005 NPRM. Comments were received from Britax Child Safety, Inc. (Britax), Dorel Juvenile Group (Dorel), Evenflo Company, Inc. (Evenflo), Graco Children's Products, Inc. (Graco), the Children's Hospital of Philadelphia (CHOP), the American Academy of Pediatrics (AAP), the National Transportation Safety Board (NTSB), the American Automobile Association (AAA), the Insurance Institute for Highway Safety (IIHS), the Advocates for Highway and Auto Safety (Advocates), and Public Citizen.

All commenters supported extending the applicability of FMVSS No. 213 to child restraints recommended for children up to 80 lb, and supported having a 10-year-old dummy to test higher-weight rated child restraints. Dorel, however, expressed concerns about the biofidelity of the HIII–10C dummy, particularly with regard to a metal ''spine box'' in the dummy's thorax region. Dorel stated that the dummy exhibited ''chin to chest contacts resulting in higher HIC scores in backed boosters as compared to backless.''[5] Similarly, Graco stated that it conducted a limited series of sled tests (22) using the HIII–10C dummy and observed a spike in the head X and Z accelerations beginning between 45 and 50 milliseconds, typically of a duration of less than 10 milliseconds. Graco stated that it did not have an explanation for the phenomenon, i.e., ''[whether] the spike was caused by a chin strike, the biofidelity of the dummy's neck or some other cause,'' but suggested that additional testing should be performed to ensure that the HIII–10C dummy is appropriate for use in FMVSS No. 213 testing. (See also comments to the July 13, 2005 NPRM proposing to adopt specifications for the HIII–10C into 49 CFR part 572, Docket 2004–21247.)

III. Agency Follow-Up

In response to these comments, NHTSA conducted additional sled tests to assess booster seat performance using the HIII–10C dummy. As a result of the tests, the agency determined that dummy set-up (posture) prior to the test significantly affected the consistency of HIC measurements of repeat tests with the HIII–10C dummy. When the dummy was somewhat reclined in the child restraint at the outset of the test, reduced head forward translation and increased head rotation caused severe dummy chin contact to a rigid portion of the dummy, which resulted in increased HIC readings. After analyzing the test results, NHTSA developed a seating procedure for positioning the HIII–10C dummy for the FMVSS No. 213 compliance test to address the chin-to-rigid body impacts. The agency has issued this SNPRM to seek public comment on incorporating this procedure into the standard. This issue is discussed in more detail in the next section.

Commenters made other suggestions about or asked for clarification of certain aspects of the August 31, 2005 NPRM. Two of these, discussed in the next section, are topics on which we seek comment in this SNPRM. These relate to the proposed parameters that would specify which test dummy would be used by NHTSA to test child restraints of recommended weight ranges (this issue was raised by Britax), and to the issue of head support requirements for CRSs and how the agency would test booster seats and other child restraints if the HIII–10C's head were above the seat back of the standard seat assembly used in the FMVSS No. 213 compliance test (this issue was raised by Evenflo).

Commenters also remarked on various other aspects of the NPRM. Comments were submitted on the proposed injury

[1] Section 4 of Anton's Law, signed on December 4, 2002, states:

Section 4. Development of Anthropomorphic Test Device Simulating a 10-Year-Old Child.

(a) Development and Evaluation. Not later than 24 months after the date of the enactment of this Act, the Secretary shall develop and evaluate an anthropomorphic test device that simulates a 10-year-old child for use in testing child restraints used in passenger motor vehicles.

(b) Adoption by Rulemaking. Within 1 year following the development and evaluation carried out under subsection (a), the Secretary shall initiate a rulemaking proceeding for the adoption of an anthropomorphic test device as developed under subsection (a).

[2] FMVSS No. 213, S4, definition of ''child restraint system.''

[3] For an overview of the current and proposed weight ranges, see Table 1 of the NPRM, 70 FR at 51723.

[4] The NPRM also requested comments on whether FMVSS No. 213's 4.4 kg mass limit (S5.4.3.2) for belt-positioning boosters should be eliminated, and replaced by a chest deflection requirement (70 FR at 51724). In addition, the NPRM document announced NHTSA's decision not to propose at this time performance criteria for seat belt fit for booster seats or other belt guidance devices (70 FR at 51726).

[5] Dorel also had concerns about the durability of the HIII–10C, the characteristics of the abdominal inserts, and the availability of the dummy for evaluation. Public Citizen suggested that the HIII–10C dummy ''must be upweighted to more closely match the mean weight of children today.''

criteria[6] (Advocates believed that the agency should conduct research into whether the criteria should be scaled; IIHS and CHOP asked whether the proposed head excursion limits are adequate; and Graco supported the NPRM's approach of having the injury assessment reference values (IARV) and performance measurements be generally the same regardless of child restraint tested). Comments were also submitted on the NPRM's discussion of injury criteria under development, with NTSB, AAP, CHOP and IIHS supporting the development of an abdominal criterion, and the latter opposed to the abdominal injury ratio discussed in the NPRM. Regarding lead time, Graco noted the spikes observed in the dummy's HIC measurements and suggested that three years of lead time should be provided to allow manufacturers time to gain experience with the HIII–10C dummy, and to make any necessary product design changes. A number of comments were received on the agency's decision, announced in the NPRM, not to propose at this time performance criteria for seat belt fit for booster seats.

The agency is evaluating the comments to the NPRMs on the HIII–10C, and will respond to all relevant comments in rulemaking documents following this SNPRM.

It is not necessary for commenters to resubmit views on today's SNPRM that were expressed in previous comments on the earlier NPRMs. The agency notes that the regulatory text proposed in this SNPRM includes text that was proposed in the August 31, 2005 NPRM. In some instances, comments were received on aspects of the proposed regulatory text. The agency is including text that was proposed in the earlier notice simply to illustrate the appearance of the affected sections. The inclusion does not mean that NHTSA has already decided to adopt the regulatory text. The agency will respond to all relevant comments in a final rule or other document following this SNPRM.

IV. Proposals or Requests for Comments on This SNPRM Relating to the HIII–10C Dummy

a. Dummy Positioning Procedures

Following publication of the NPRM, in March/April 2006 NHTSA conducted additional sled testing of booster seats at the agency's Vehicle Research and Test Center (VRTC) using the HIII–10C dummy. The findings of this testing program indicated that there were HIC measurement inconsistencies in repeated tests with the same booster seat model. To determine the reasons behind this finding, VRTC conducted additional sled tests in July 2006. The following discussion summarizes the findings of these testing programs. The findings are discussed at length in a NHTSA technical report, ''Development of HIII 6-Year-Old and 10-Year-Old Seating Procedure for Booster Seat Testing,'' (hereinafter ''VRTC report''), which has been placed in the docket for this rulemaking.

March/April 2006 Testing Program

VRTC conducted 58 sled test exposures using 30 booster seats with the HIII–10C dummy (see Table 1). All booster seats were installed on the FMVSS No. 213 seat test fixture in accordance with the manufacturers' instructions. High-back child restraints with adjustable head restraints were positioned such that they were at the correct height relative to the dummy's head and also gave optimal shoulder belt fit (i.e., the belt was not on the dummy's neck or too far outboard on the shoulder). Child restraints with non-adjustable head restraints with shoulder belt guides attached were tested according to the manufacturers' instructions as to belt placement, if provided.

Table 1 summarizes the chest acceleration, head and knee excursions, and HIC_{36} measurements observed in the March/April 2006 tests. The full description of the testing set-up and details of all injury parameters measurements are provided in the VRTC report.

TABLE 1.—EVALUATION OF HIII–10-YEAR-OLD DUMMY IN FMVSS NO. 213 SLED TESTS (MAR/APR 2006)

IARV	HIC 36 ms	Chest acc. 3 ms	Head excursion	Knee excursion
	1000	60 g	813 mm	915 mm
Restraint:				
Graco Treasured Cargo	1094	51	490	667
	903	48	562	763
Graco Treasured Cargo	1128	52	527	736
	910	51	475	637
Cosco High Rise	506	45	421	568
	395	48	436	590
Cosco High Rise	541	45	437	614
	532	44	449	631
Safety 1st Intera	824	52	518	716
Safety 1st Intera	NA	46	502	746
Safety 1st Apex 65	1137	49	540	824
	950	49	521	801
Evenflo Generations	622	56	603	809
	1216	56	580	808
Britax Parkway	764	58	638	863
	649	51	658	834
Graco Treasured CarGo	667	46	539	768
	751	50	537	822
Compass 500	792	65	651	851
	1594	58	583	802

[6] The NPRM proposed performance criteria for the HIII–10-year-old dummy similar to the current FMVSS No. 213 criteria, because the agency was not aware of any injuries unique to children in booster seats that would necessitate separate and differing injury criteria limits. Thus, we tentatively concluded that the existing injury criteria would likely ensure the continued effectiveness of child restraints rated to the higher weight limit of 80 lb. The specific injury criteria measurement maximums for the HIII–10-year-old dummy were: HIC_{36} = 1000; chest acceleration = 60 g's (3 millisecond clip); head excursion = 813 millimeters (mm) for untethered condition, 720 mm for tethered condition (if applicable); and knee excursion = 915 mm. In preparation for proposing these criteria measurement maximums, the agency's Vehicle Research and Test Center (VRTC) performed testing on booster seats with the HIII–10C dummy; only one child restraint in the test series failed the existing FMVSS No. 213 injury criteria.

TABLE 1.—EVALUATION OF HIII–10-YEAR-OLD DUMMY IN FMVSS NO. 213 SLED TESTS (MAR/APR 2006)—Continued

IARV	HIC 36 ms	Chest acc. 3 ms	Head excursion	Knee excursion
	1000	60 g	813 mm	915 mm
Graco Cherished CarGo	773	55	585	777
	1126	51	650	875
Evenflo Big Kid	836	54	538	770
	731	50	517	743
Cosco Summit Deluxe	481	47	528	775
	753	45	557	862
Cosco Commuter DX	826	52	591	881
	1137	52	670	985
Safety 1st Enspira	586	48	602	874
	653	50	625	905
Cosco Alpha Omega	627	44	601	801
	472	42	560	767
Safety 1st Intera	NA	49	492	751
	1030	43	551	864
Cosco High Rise (no back)	NA	47	470	494
	733	45	682	696
Evenflo Chase Premiere	839	52	639	907
	997	53	560	864
Graco Turbo Booster	450	46	571	753
	903	47	525	739
Recaro Young Style	852	55	678	856
	848	57	592	778
Safety 1st Vantage Point	911	49	694	1024
	725	45	609	909
Combi Dakota (no back)	414	52	507	711
	424	51	505	695
Cosco Protek	511	47	578	740
	855	46	598	794
Recaro Young Sport	931	50	651	884
	808	37	607	802
Combi Kobuk	989	73	679	895
	573	52	653	808
Cosco Commuter	737	51	573	826
Cosco Summit	632	52	598	832
Cosco Alpha Omega	638	42	654	839
Safety 1st Enspira	620	41	616	758
Safety 1st Apex 65	NA	53	577	937
	965	42	530	822

The results of the March/April 2006 tests indicated that there were inconsistencies in several HIC_{36} measurements in repeated tests with the HIII–10C dummy placed in the same type/model child restraint system. For example, the HIC_{36} measurements for the belt positioning booster (BPB) Evenflo Generations varied from 622 (Pass IARV) to 1216 (Fail IARV). The HIC_{36} measurements for the Compass 500 varied from 792 (Pass IARV) to 1594 (Fail IARV) (see Figure 1). Generally, there were no inconsistencies observed in the other FMVSS No. 213 injury criteria measurements of chest acceleration, and head and knee excursions.

After analyzing the test results, VRTC determined that dummy posture and belt placement affected the kinematic response of the dummy, which in turn affected HIC readings. A dummy that is set up to have a more reclined torso (high torso angle) is more likely to submarine under the vehicle belt. The motion of the head is much different in a submarining case than in a situation where the dummy is well restrained. When the dummy is restrained effectively (shoulder belt centered on the sternum, lap belt on the pelvis), the head moves forward in unison with the upper torso as the belt tension increases. Then, as the belt reaches its spooling limit, the head rotates in a wide arc and late in the event contacts a location either on the ribcage or into a portion of the bib [7] having a large clearance to the spine box. Since the ribcage is compliant, the bib-to-spine box clearance is high, and the contact occurs very late in the event, the resulting head acceleration due to chin contact is low. Thus its contribution to the HIC calculation is minimal.

In contrast, in a submarining case, the head does not translate forward much at all because the shoulder belt engages the neck instead of restraining the upper torso. Therefore the upper torso steadily becomes more horizontal and reclined because the overwhelming majority of the dummy's mass is below the shoulder belt. The head is pulled downward by the weight of the dummy through the neck, and the forward inertia of the head mass causes severe rotation about the shoulder belt at the bottom of the neck. As a result, the head arc is much tighter and chin contact occurs sooner in the event, before a significant amount of kinetic energy is dissipated through the belt. This motion causes the chin to contact the low-clearance portion of the bib overlaying the top part of the spine box housing the lower neck load cell. The bib does not provide much resistance to the head's

[7] The bib is a piece of thin plastic on the front of the dummy that serves as an interface between the ribs and the sternum plate. It extends over each shoulder and covers the cavity between the top rib and the lower neck region of the spine box. The chest jacket covers the bib.

increased rotational energy and the chin essentially ''bottoms out'' on the spine box, causing a large spike in head acceleration and increased HIC.

In summary, VRTC found that a more reclined posture of the HIII–10C dummy leads to an increased likelihood for submarining of the dummy. This situation leads to much higher rotational velocity in the dummy's head, putting it in non-representative contact with a more rigid portion of the dummy structure. It was thus determined that through kinematics, dummy posture significantly affects HIC.

July 2006 Testing Program

In this test program, an additional matrix of 12 sled tests was conducted to address the finding that the dummy HIC_{36} response is sensitive to the seating posture of the dummy in the booster seat. The purpose of this testing program was to determine if the HIC_{36} variability could be decreased by tighter controls on both the dummy's posture and the placement of the belt to restrain the dummy to the test seat assembly.

Four factors were evaluated in the VRTC testing program:

- Seating position—Left Side vs. Right Side
- Torso angle—Upright vs. Reclined
- Dummy manufacturer—FTSS vs. Denton
- Booster model—Evenflo Generations vs. Compass 500

The results of the testing indicate that the dummy torso angle (representing posture) had a much larger effect on HIC_{36} than the other three variables. Dummy posture was the only variable to have a statistically significant effect on HIC_{36} outcome (alpha significance level = 0.007, n = 8) and the p-value was more than an order of magnitude smaller than the next largest effector (dummy manufacturer had p = 0.065). Figure 1 shows the average HIC_{36} with error bars giving the minimum/maximum values for each variable comparison. These test results indicate that the kinematics associated with a more horizontal torso (i.e., reclined initial posture) led to more head rotation and more severe dummy chin contact, which ultimately resulted in higher HIC_{36} readings. Belt placement, which is largely a function of both booster seat design and dummy posture, was also shown to influence HIC in a similar manner to dummy posture (torso angle). A more inboard shoulder belt was found to have the same effect as a more reclined posture, and thus similarly, resulted in higher HIC_{36} values. Controlling the posture and belt placement of the dummy decreased the HIC_{36} variability in the booster seats tested by 78%.[8]

Figure 2 shows the relationship of HIC_{36} measurements vs. torso angle (representing posture) for the two belt-positioning boosters (BPBs) (Evenflo Generations and Compass 500) that were tested using the pulse and seat assembly of FMVSS No. 213. The plot indicates that for these two BPBs, a 20° torso angle is correlated to a HIC_{36} value of 1000. Note that the dispersion in the data at each torso angle in Figure 2 is due to the combined effects of left side versus right side, dummy manufacturer, dynamic belt motion due to booster seat design, and small variations in the controlled torso angle.

BILLING CODE 8011–01–P

[8] When the torso angle for the HIII–10-year-old dummy was set to the upright position of approximately 16°, the average coefficient of variation for HIC_{36} for repeat tests of the two booster seats used in the July 2006 test series was 12.4%. HIC_{36} variability was lessened to an acceptable level below the pass/fail criterion of 1000, and the average HIC readings for the two seats used in repeat testing ranged from 874–921.

Figure 1. Comparison of Variables and Their Effect on HIC 36

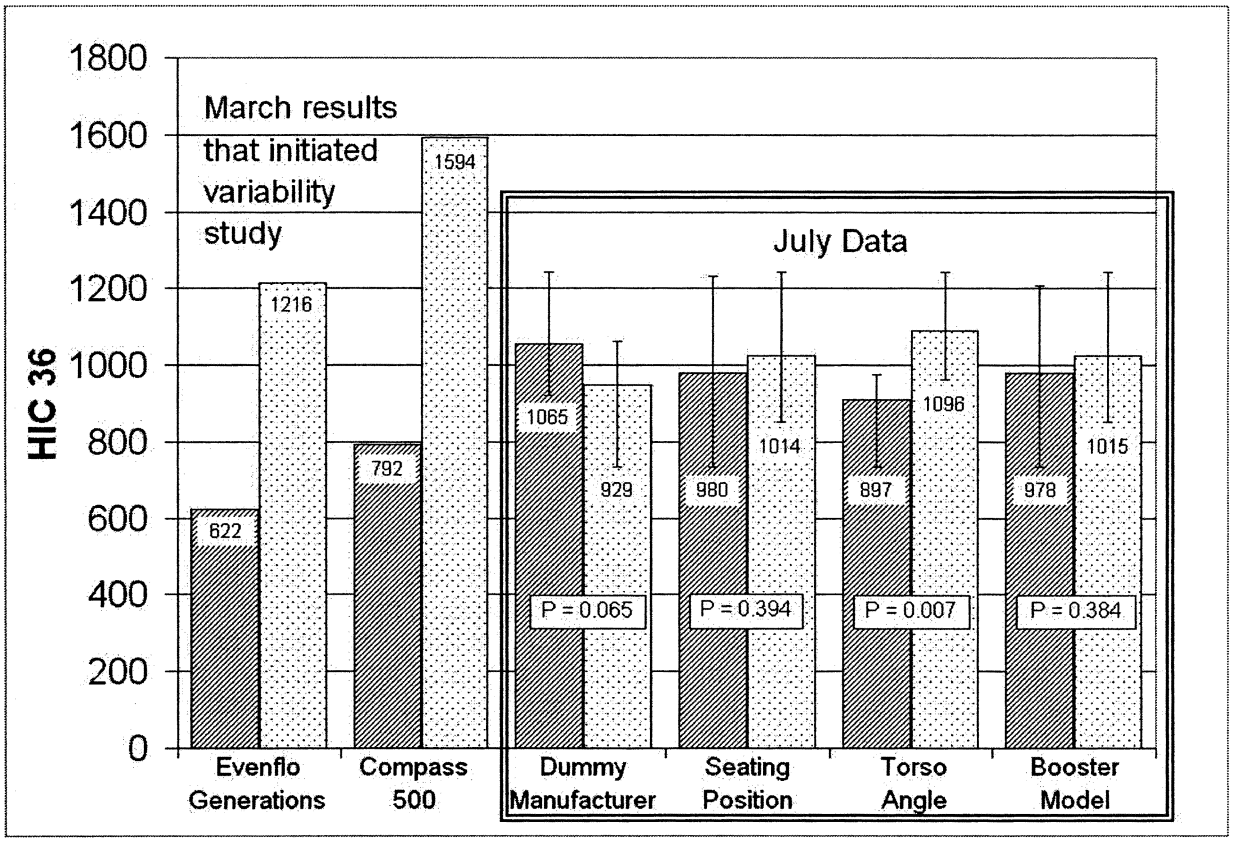

Figure 2. HIC Measurement vs. Torso Angle for HIII 10-Year-Old Dummy in FMVSS No. 213 Sled Tests (July 2006)

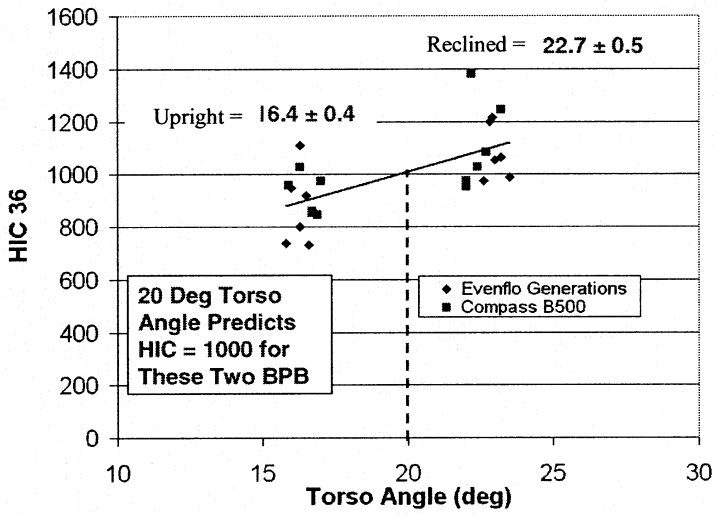

Proposed Dummy Positioning Procedure

A detailed description of the seating procedure used by VRTC is provided in the VRTC report and in the proposed regulatory text. The general approach is as follows:

1. Set the dummy's neck angle at 16 degrees.

2. Set the dummy's lumbar angle at standard posture.

3. Place the booster seat on the FMVSS No. 213 bench seat.

4. Place the dummy in the booster seat so that the midsagittal line of the dummy is aligned with the centerline of the booster.

5. Measure the X and Z locations of the left and right shoulder pivots. Make sure that the X and Z values for these two points are within 10 mm of each other to ensure that the dummy is not twisted or tilted in the seat.

6. Locate the head CG, H-point, and knee pivot point. Calculate the H-point location of the dummy relative to the FMVSS No. 213 seat Z point by first measuring the X and Z coordinates of the knee pivot and head center of gravity. Then mathematically locate the intersection point of two circles using the knee pivot and head center of gravity as the centers and the known dummy anthropometric lengths as radii (see VRTC report for more detailed explanation).

7. Set the torso angle (established with the head CG and H-point) to 14 degrees ± 0.5 degrees from vertical.

8. Apply the belt restraints following the booster manufacturer's routing instructions and using standard FMVSS No. 213 belt tensions.

We note that the University of Michigan Transportation Research Institute (UMTRI) has also developed a seating procedure for use with the HIII–10C dummy that is similar to the procedure proposed in this SNPRM.[9] UMTRI had similar findings to the ones of VRTC concerning HIC measurements of the dummy. In a June 14, 2006 presentation to the agency on its preliminary findings of an on-going biomechanics study, UMTRI stated that both the dummy's initial position and belt placement affected HIC measurements during sled testing of booster seats with the HIII–10C dummy. The test data are publicly available on the NHTSA biomechanics database. The data and videos can also be accessed from the NHTSA Web site *http://www-nrd.nhtsa.dot.gov/database/aspx/biodb/querytesttable.aspx*. VRTC used the average child posture data from the UMTRI Stapp paper in combination with the HIII–10C dummy's anthropometry to derive a mean torso angle of 14.5° as the optimal angle to reduce HIC_{36} variability for the HIII–10C dummy while maintaining a biofidelic posture. This angle is consistent with the upright torso angle of approximately 16° used by the agency in the series of sled tests conducted by VRTC in July 2006.

A series of tests using the HIII–10C dummy was conducted in March/April of 2007 to validate the seating procedure. This series was a subset of the BPBs that were tested in the March/April 2006 series (see Table 1). Table 2 contains the test matrix and Table 3 summarizes the test results. All of the tests were conducted at the proposed torso angle of 14° ± 0.5°. This ± 0.5° tolerance limit was achievable with the various BPB models evaluated. The Graco Turbo Booster was tested both with and without the highback to determine the effect of the highback.

The results indicated that controlling the torso angle reduced dummy response variability for the BPBs that were tested. The IARVs were not exceeded in any of the tests.

TABLE 2.—TEST MATRIX FOR VALIDATION OF PROPOSED SEATING PROCEDURE USING HIII–10C DUMMY (MAR/APR 2007)

BPB model	Dummy SN	Number of tests
Britax Parkway	D001	3
Safety 1st Apex 65	F001	3
Recaro Young Style	D001	3
Cosoc Protek	F001	3
Graco Turbo Booster:		
Without back	D001	3
With back	F001	3

TABLE 3.—RESULTS FOR VALIDATION OF PROPOSED SEATING PROCEDURE USING HIII–10C DUMMY IN FMVSS NO. 213 SLED TESTS (MAR/APR 2007)

IARV	HIC 36 ms	Chest acc. 3 ms	Head excursion	Knee excursion
	1000	60 g	813 mm	915 mm
Restraint:				
Safety 1st Apex 65	830	51.1	614	790
	683	55.7	610	815
	893	53.3	637	810
Britax Parkway	473	48.4	574	704
	507	49.0	617	717
	420	47.0	614	732
Graco Turbo Booster:				
With highback	433	42.0	611	707
	356	43.3	602	709
Graco Turbo Booster:				
No back	622	47.3	569	684
	625	49.3	540	698
	703	52.1	579	692
Recaro Young Style	680	50.1	697	770
	838	46.4	617	754
	763	52.2	706	773
Cosco Protek	496	42.9	622	694
	403	43.8	574	603

Comments are requested on the proposed dummy positioning procedure. It is noted that the proposed dummy positioning procedure may not necessarily lower HIC values across the board for the HIII–10C dummy (i.e., for some restraints, positioning the dummy in an upright posture may not necessarily prevent submarining and high head accelerations when the seat is tested dynamically). However, when testing the HIII–10C dummy in a more

[9] Reed MP, *et al.* ''Improved Positioning Procedures for 6YO and 10YO ATDs Based on Child Occupant Postures,'' Stapp Car Crash Journal, Vol. 50 (November 2006), pp. 337–388.

upright posture, the HIC values the dummy produces should be within an acceptable range of variability in repeated testing.

The proposed positioning procedure would apply when the HIII–10C is used to test booster seats and not when the dummy is used to test child restraints other than booster seats (''non-booster seats'') that are recommended for children weighing over 30 kg (65 lb).[10] NHTSA tentatively concludes that the procedure is not needed in tests of the HIII–10C in non-booster seats because those restraints have an internal harness to help position the dummy. For those restraints, there is already a methodology set forth in FMVSS No. 213 and in the agency's Laboratory Test Procedures for the standard [11] for positioning test dummies in the restraint systems. The methodology specifies applying a certain load to the dummy's pelvic/lower torso area to ensure the dummy is as far back in the restraint as possible, and tightening the internal harness to specifications. Those procedures reasonably assure that the dummy is properly positioned in the child restraint, and appear suitable for positioning the HIII–10C. In contrast, booster seats do not have an internal harness to help position the dummy, so there is more opportunity for variation in the positioning of the HIII–10C and a greater need to control the torso angle and the positioning of the lap/shoulder belt. Comments are requested on this issue.

Comments are also requested on whether FMVSS No. 213 should require boosters or other child restraint systems (CRSs) to be designed such that the dummy can be positioned in the CRS in accordance with positioning procedures. Conversely, if the dummy cannot be so positioned, what flexibility should be established to fluctuate from the procedures to fit the dummy in the CRS? The agency is also considering whether FMVSS No. 213 should expressly require that each child restraint system must be capable of fitting the test dummy that is specified in S7 of FMVSS No. 213 to evaluate the restraint. (For example, if the CRS were recommended for use by children weighing more than 30 kg (65 lb), should the standard specify that the CRS must be capable of fitting and being tested with the HIII–10C dummy?)

b. Continued Use of the Weighted HIII–6-Year-Old Dummy

FMVSS No. 213 requires that booster seats recommended for use by children weighing between 22.7 kg (50 lb) and 30 kg (65 lb) be tested with the HIII 6-year-old (HIII–6C) (52 lb) instrumented dummy for injury assessment performance requirements, and with the weighted HIII 62 lb 6-year-old uninstrumented dummy for assessment of the restraint's structural integrity. Because a number of booster seats are currently recommended by their manufacturers for children weighing up to 80 lb (36 kg), the NPRM proposed to use the instrumented HIII–10C 78 lb dummy (35 kg) to test all child restraints recommended for children over 50 lb, and to discontinue the use of the weighted HIII 6-year-old dummy entirely in FMVSS No. 213.

Britax commented that it agreed with our proposal to use the HIII–10C dummy when testing CRS with a weight capacity greater than 65 lb, but disagreed with using the dummy for testing CRS with a weight capacity between 50 and 65 lb. The commenter stated that ''Restraints, and potentially booster seats, with a maximum capacity between 50 and 65 pounds are not structurally and/nor dimensionally designed for testing with an ATD [anthropomorphic test device], or use by a child, having the weight or size of the HIII–10C dummy.'' Britax therefore suggested that FMVSS No. 213 remain as it is currently for CRS with weight capacity between 50 and 65 lb, using the HIII–6C dummy to measure injury criteria and the weighted HIII–6C dummy to assess structural integrity.

We have determined that this comment has merit. We tentatively agree that it might not be advisable to require all child restraints rated above 50 lb to be tested with the 78 lb HIII–10C dummy, since some of these seats are not designed for or intended to accommodate a 10-year-old child. Some of these child restraints do not currently fit a 10-year-old dummy, or, if made to fit, might not be able to meet the performance requirements of the standard when tested with the HIII–10C. Britax stated that some child restraints rated above 50 lb now serve a safety need by providing a 5-point harness restraint system for children up to 65 lb. The commenter was concerned that these child restraints would be pulled off the market because they might not be able to meet FMVSS No. 213's requirements when tested with the HIII–10C dummy, a result that would be unwarranted and undesirable since the restraints are not intended for children weighing more than 65 lb.

Because Britax's arguments appear reasonable, we are proposing that, for child restraints rated for children weighing from 50 to 65 lb, these restraints would continue to be tested with the HIII–6C instrumented dummy for performance, and with the weighted HIII–6C uninstrumented dummy for structural integrity. Accordingly, under this proposal, the uninstrumented HIII–6C dummy would be retained in FMVSS No. 213. Under the proposal, the instrumented HIII–10C dummy would only be used to test child restraints rated for children weighing 30 kg to 36 kg or more (65 to 80 lb or more).

c. Head Support Surface

FMVSS No. 213 (S5.2.1.1) currently requires some CRSs to have a seat back to provide restraint against rearward movement of the child's head (rearward in relation to the child). The determination of whether a seat back is required is based on the dummy used in the compliance testing of the restraint. A child restraint need not have a seat back if a specified point on the dummy's head (approximately located at the top of the dummy's ears) is below the top of the standard seat assembly on which the restraint is installed for compliance testing (S5.2.1.2). Because the Hybrid II and Hybrid III 6-year-old dummies are not used in the assessment, booster seats are excluded from the requirement to have a seat back. The agency excluded boosters from the seat back requirement because it was concerned that the additional costs associated with redesigning booster seats to add a seat back were not justified from a safety standpoint. The agency did not know of real world crash data that indicated a problem with head or neck injuries in rear impact crashes. (60 FR 35126, 35135; July 6, 1995.)

This SNPRM proposes to keep this exclusion unchanged by amending S5.2.1.2, such that S5.2.1.2 would specify that the HIII–10C, in addition to the 6-year-old test dummies, would not be used to determine the applicability of the head support surface requirements of S5.2.1.1. We are not aware of real world crash data indicating a problem with head or neck injuries in rear impact crashes, i.e., a need for a head support surface requirement. NHTSA is interested in crash data indicating a need for a requirement for a seat back on booster seats for older children. Comments are also requested on any additional costs that might result from redesigning booster seats to provide a seat back.

[10] There are only a few non-booster seats recommended for children weighing over 30 kg (65 lb) (e.g., Britax Regent and Sunshine Kids Radian 80).

[11] *http://www.nhtsa.dot.gov/staticfiles/DOT/NHTSA/Vehicle%20Safety/Test%20Procedures/Associated%20Files/TP213-9a.pdf*

A related issue concerns how the agency would test backless booster seats if the HIII–10C's head were above the seat back of the standard seat assembly used in the FMVSS No. 213 compliance test. Evenflo stated that it instructs its consumers to ensure that the child's head is supported by the vehicle seat back or head restraint. Evenflo noted that when a backless booster is placed on the FMVSS No. 213 test bench, the HIII–10C ''is too tall to satisfy this criterion.'' NHTSA intends to test the booster to FMVSS No. 213's dynamic test requirements even if the HIII–10C's head is above the seat back of the standard seat assembly. Such a test would assess the performance of the CRS with an older child if the CRS did not have a head support, or if the CRS were used in a vehicle that did not have a head restraint or other supporting structure for the child. On the other hand, Evenflo also observed that in a test of a backless booster seat with the HIII–10C, upon rebound the dummy's head struck the cross bar behind the test bench seat back that supports the tether anchorage, resulting in a HIC_{36} value above 1000. Evenflo believed that the outcome was ''purely an artifact of the test environment and does not reflect real-world vehicle experience in this country and in Europe that clearly demonstrates the efficacy of backless boosters.'' We are interested in other commenters' experiences testing with the HIII–10C, especially during the rebound stage of the FMVSS No. 213 sled test.

d. Housekeeping Measures

In an effort to delete outdated text from FMVSS No. 213, this document will remove and reserve S7.1.1 of the standard and a part of S7.1.3. S7.1.1 and S7.1.3 were adopted when the CRABI and Hybrid III 3-year-old and 6-year-old test dummies were incorporated into FMVSS No. 213's test procedures. The paragraphs relate to the effective date (August 1, 2005) for testing with the new dummies. Since the August 1, 2005 date has passed, the text is no longer necessary in FMVSS No. 213.

Part 2. Hybrid III 6-Year-Old Child Test Dummy

In this Part 2 of the SNPRM, we are proposing to add a seating procedure for positioning the Hybrid III 6-year-old dummy (HIII–6C) in a child restraint for FMVSS No. 213 compliance testing. Concerns about the variability in HIC measurements obtained by that test dummy have led NHTSA to postpone mandatory use of the dummy in compliance tests. The seating procedure addresses the variability issues and facilitates the full use of the dummy as a compliance instrument.

I. Background

When NHTSA incorporated the Hybrid III (HIII) 6-year-old dummy (codified in 49 CFR part 572, subpart N) into FMVSS No. 213 by way of a 2003 final rule,[12] the agency expected to use the test dummy in compliance tests of child restraints manufactured on or after August 1, 2005. It was brought to the agency's attention, however, that manufacturers needed more time than provided in the final rule to optimize their product designs to the requirements of the standard. Dorel informed the agency [13] that Dorel belt positioning booster seats evaluated with the new dummy would fail to meet FMVSS No. 213, showing HIC measurements approximately double that when the same booster seats were tested with the Hybrid II (HII) 6-year-old dummy (49 CFR part 572, subpart I). Dorel believed that the HIII dummy ''exhibits severe, non-biofidelic neck elongation and head rotation* * *This results in the chin/face of the dummy striking the chest, causing artificially high HIC measurements.'' [Footnote not included.] Dorel asked NHTSA to take immediate action to permit continued use of the HII 6-year-old to test CRSs manufactured on and after August 1, 2005.

NHTSA issued an interim final rule that delayed the August 1, 2005 date to August 1, 2008. (August 3, 2005; 70 FR 44520, Docket 22010.) The agency sought to provide manufacturers additional time to gain experience using the test dummy and to optimize their product designs. The rule allowed use of the Hybrid II 6-year-old dummy at the manufacturers' option, for child restraints manufactured until August 1, 2008.

II. Proposed Amendments Relating to the HIII–6C Dummy

This SNPRM follows up on the interim final rule by proposing dummy positioning procedures for the HIII–6C dummy that would be used when testing booster seats. The proposed seating procedure for the HIII–10C dummy outlined earlier in this notice is also proposed for the HIII–6C dummy, with the exception of the computational values used to determine the H-point and torso angle. These values are different for the HIII–6C dummy due to differences in dummy size.

A test program, discussed below, for the 6-year-old dummy was conducted in July 2007, using the new seating procedure. The agency believes that the introduction of this repeatable positioning procedure will address the HIII 6-year-old issues raised by Dorel. We have tentatively concluded that the procedure eliminates the variability of the test environment that is caused by different seating positions, and that implementation of the seating procedure will lead to more consistent results in the transition from the Hybrid II dummies to the Hybrid III dummies.

In order to allow sufficient time for manufacturers to incorporate this seating procedure into their compliance testing with the HIII 6-year-old dummy, NHTSA is proposing to postpone the 2008 effective date until 2010. Comments are requested on this postponement.

As with the HIII–10C, the proposed positioning procedure for the HIII–6C dummy would apply when the dummy is used to test booster seats and not when the dummy is used to test non-booster seats. The agency's reasons for concluding that the procedure is not needed in tests of the HIII–6C in non-booster seats are the same as those explained above for the HIII–10C, i.e., non-booster seats have an internal harness that positions the dummy and, together with the adjustment procedures already in FMVSS No. 213, controlled and careful positioning of the dummy is already achieved. Comments are requested on this issue.

III. Testing

In July 2007, a series of sled tests were conducted to determine if the proposed seating procedure developed for the HIII–10C dummy could be applied to the HIII–6C when tested in a BPB. Two models of BPBs were selected, based on the results observed with the HIII–10C, to test with the HIII–6C: The Britax Parkway and the Safety 1st Apex 65. Each BPB was tested at the optimum torso angle of 14° and in the more reclined posture of 22°. Table 4 contains the test matrix for the HIII–6C and Table 5 contains a summary of the test results.

As with the HIII–10C dummy, the variability in dummy responses was minimal among repeated tests for the HIII 6-year-old dummy. The same trend observed for the HIII–10C was observed with the HIII–6C dummy: a more reclined initial posture resulted in

[12] June 24, 2003, 68 FR 37620, Docket 15351.

[13] *http://dmses.dot.gov/docimages/pdf92/340975_web.pdf.*

higher HIC_{36} values compared to the more upright posture.

TABLE 4.—TEST MATRIX FOR VALIDATION OF PROPOSED SEATING PROCEDURE USING HIII–6C DUMMY (JULY 2007)

[Numbers in cells indicate sled run numbers]

	Torso angle = 14 deg		Torso angle = 22 deg	
	Driver SN 008	Passenger SN108	Driver SN 088	Passenger SN 108
Britax Parkway	1, 2, 3	.....	4, 5, 6	.....
Safety 1st Apex 65	.....	1, 2, 3	.....	4, 5, 6

TABLE 5.—RESULTS FOR VALIDATION OF PROPOSED SEATING PROCEDURE USING HIII–6C DUMMY (JULY 2007)

Restraint	Torso angle (deg)	HIC 36 ms	3 ms. Chest Acc. (g)	Head excursion (mm)	Knee excursion (mm)
		1000	60	813	915
Britax Parkway	14.2	523	57.4	538	652
	13.9	445	52.9	550	656
	14.5	422	56.7	551	676
	22.3	691	47.0	523	674
	22.3	613	53.8	565	684
	21.9	670	52.0	571	695
Safety 1st Apex 65	15.1	478	47.7	517	649
	13.9	599	49.2	541	694
	14.7	497	47.3	522	657
	21.9	671	46.1	562	726
	22.0	655	43.3	511	693
	21.9	690	44.2	569	729

Submission of Comments

How Do I Prepare and Submit Comments?

Your comments must be written and in English. To ensure that your comments are filed correctly in the docket, please include the docket identification number of this document in your comments.

Your comments must not be more than 15 pages long. (49 CFR 553.21) NHTSA established this limit to encourage you to write your primary comments in a concise fashion. However, you may attach necessary additional documents to your comments. There is no limit on the length of the attachments.

Please submit two copies of your comments, including the attachments, to the docket at the address given above under **ADDRESSES**. You may also submit your comments to the docket electronically.

Please note that pursuant to the Data Quality Act, in order for substantive data to be relied upon and used by the agency, it must meet the information quality standards set forth in the OMB and DOT Data Quality Act guidelines. Accordingly, we encourage you to consult the guidelines in preparing your comments. OMB's guidelines may be accessed at *http://www.whitehouse.gov/omb/fedreg/reproducible.html*.

How do I submit confidential business information?

If you wish to submit any information under a claim of confidentiality, you should submit three copies of your complete submission, including the information you claim to be confidential business information, to the Chief Counsel, NHTSA, at the address given above under **FOR FURTHER INFORMATION CONTACT**. In addition, you should submit two copies, from which you have deleted the claimed confidential business information, to the docket at the address given above under **ADDRESSES**. When you send a comment containing information claimed to be confidential business information, you should include a cover letter setting forth the information specified in NHTSA's confidential business information regulation (49 CFR Part 512).

Will the agency consider late comments?

NHTSA will consider all comments received before the close of business on the comment closing date indicated above under **DATES**. To the extent possible, the agency will also consider comments that the docket receives after that date. If the docket receives a comment too late for the agency to consider it in developing a final rule (assuming that one is issued), the agency will consider that comment as an informal suggestion for future rulemaking action.

How can I read the comments submitted by other people?

You may read the comments received by the docket at the address given above under **ADDRESSES**. The hours of the docket are indicated above in the same location. You may also read the comments on the Internet.

Please note that even after the comment closing date, NHTSA will continue to file relevant information in the docket as it becomes available. Further, some people may submit late comments. Accordingly, the agency recommends that you periodically check the docket for new material.

Anyone is able to search the electronic form of all comments received into any of our dockets by the name of the individual submitting the comment (or signing the comment, if submitted on behalf of an association, business, labor union, etc.). You may review DOT's complete Privacy Act Statement in the **Federal Register** published on April 11, 2000 (Volume 65, Number 70; Pages 19477–78).

Rulemaking Analyses and Notices

Executive Order 12866 and DOT Regulatory Policies and Procedures

This rulemaking document was not reviewed by the Office of Management and Budget under E.O. 12866. It is not considered to be significant under E.O. 12866 or the Department's Regulatory Policies and Procedures (44 FR 11034; February 26, 1979). The August 31, 2005 NPRM provided a discussion of the costs associated with the proposed incorporation of the HIII–10C dummy into FMVSS No. 213. The agency stated in the NPRM that the costs are largely attributable to the expense of an instrumented HIII–10C dummy. The 2004 price of an uninstrumented 10-year-old dummy is about $36,550. The specified instrumentation costs approximately $59,297. The NPRM and this SNPRM do not require manufacturers to use any test dummy in certifying their child restraints. Rather, this rulemaking proposes changes to how NHTSA would conduct compliance testing under FMVSS No. 213. The minimal impacts of today's proposal do not warrant preparation of a regulatory evaluation.

We cannot quantify the benefits of this rulemaking. However, the agency believes this rulemaking would enhance the safety of child restraint systems by setting dummy positioning procedures for the Hybrid III 6-year-old and HIII–10C. This proposed rule would increase the repeatability of the test dummies' HIC measurements, which increases the utility of the dummies in FMVSS compliance tests. The result of this proposed rule would be to provide better assurance that each child restraint safely restrains the children for whom the restraint is recommended.

Regulatory Flexibility Act

Pursuant to the Regulatory Flexibility Act (5 U.S.C. 601 *et seq.*, as amended by the Small Business Regulatory Enforcement Fairness Act (SBREFA) of 1996) whenever an agency is required to publish a notice of rulemaking for any proposed or final rule, it must prepare and make available for public comment a regulatory flexibility analysis that describes the effect of the rule on small entities (i.e., small businesses, small organizations, and small governmental jurisdictions), unless the head of an agency certifies the rule will not have a significant economic impact on a substantial number of small entities. I certify that this proposed rule, if adopted, would not have a significant economic impact on a substantial number of small entities. The reasons underlying this certification are discussed in the August 31, 2005 NPRM. This SNPRM would not increase the testing that NHTSA conducts of child restraints. The SNPRM addresses dummy positioning procedures and generally would not have any significant impact on the testing performed on restraints recommend for children weighing up to 80 lb. Manufacturers currently must certify their products to the dynamic test of Standard No. 213. They typically provide the basis for those certifications by dynamically testing their products using child test dummies. The effect of this SNPRM on most child restraints would be to specify procedures that NHTSA would take in positioning the HIII 6-year-old and HIII–10C dummies. Testing child restraints using the procedures is not expected to affect the pass/fail rate of the restraints significantly.

National Environmental Policy Act

NHTSA has analyzed this proposed rule for the purposes of the National Environmental Policy Act and determined that it would not have any significant impact on the quality of the human environment.

Executive Order 13132 (Federalism)

NHTSA has examined today's NPRM pursuant to Executive Order 13132 (64 FR 43255, August 10, 1999) and concluded that no additional consultation with States, local governments or their representatives is mandated beyond the rulemaking process. The agency has concluded that the rulemaking would not have federalism implications because a final rule, if issued, would not have ''substantial direct effects on the States, on the relationship between the national government and the States, or on the distribution of power and responsibilities among the various levels of government.''

Further, no consultation is needed to discuss the preemptive effect of today's rulemaking. NHTSA rules can have preemptive effect in at least two ways. First, the National Traffic and Motor Vehicle Safety Act contains an express preemptive provision: ''When a motor vehicle safety standard is in effect under this chapter, a State or a political subdivision of a State may prescribe or continue in effect a standard applicable to the same aspect of performance of a motor vehicle or motor vehicle equipment only if the standard is identical to the standard prescribed under this chapter.'' 49 U.S.C. 30103(b)(1). It is this statutory command that preempts State law, not today's rulemaking, so consultation would be inappropriate.

In addition to the express preemption noted above, the Supreme Court has also recognized that State requirements imposed on motor vehicle manufacturers, including sanctions imposed by State tort law, can stand as an obstacle to the accomplishment and execution of a NHTSA safety standard. When such a conflict is discerned, the Supremacy Clause of the Constitution makes their State requirements unenforceable. See *Geier* v. *American Honda Motor Co.,* 529 U.S. 861 (2000). NHTSA has not outlined such potential State requirements in today's rulemaking, however, in part because such conflicts can arise in varied contexts, but it is conceivable that such a conflict may become clear through subsequent experience with today's proposed standard and test regime. NHTSA may opine on such conflicts in the future, if warranted. See id. at 883–86.

Civil Justice Reform

This NPRM would not have any retroactive effect. Under 49 U.S.C. 30103, whenever a Federal motor vehicle safety standard is in effect, a State may not adopt or maintain a safety standard applicable to the same aspect of performance which is not identical to the Federal standard, except to the extent that the state requirement imposes a higher level of performance and applies only to vehicles procured for the State's use. 49 U.S.C. 30161 sets forth a procedure for judicial review of final rules establishing, amending, or revoking Federal motor vehicle safety standards. That section does not require submission of a petition for reconsideration or other administrative proceedings before parties may file suit in court.

Paperwork Reduction Act

Under the Paperwork Reduction Act of 1995, a person is not required to respond to a collection of information by a Federal agency unless the collection displays a valid control number from the Office of Management and Budget (OMB). This proposed rule would not establish any requirements that are considered to be information collection requirements as defined by the OMB in 5 CFR Part 1320.

National Technology Transfer and Advancement Act

Section 12(d) of the National Technology Transfer and Advancement Act of 1995 (NTTAA), Public Law 104–113, section 12(d) (15 U.S.C. 272) directs NHTSA to use voluntary

consensus standards in its regulatory activities unless doing so would be inconsistent with applicable law or otherwise impractical. Voluntary consensus standards are technical standards (*e.g.*, materials specifications, test methods, sampling procedures, and business practices) that are developed or adopted by voluntary consensus standards bodies, such as the Society of Automotive Engineers (SAE). The NTTAA directs NHTSA to provide Congress, through OMB, explanations when the agency decides not to use available and applicable voluntary consensus standards.

The agency searched for, but did not find, any voluntary consensus standards applicable to this proposed rulemaking.

Unfunded Mandates Reform Act

Section 202 of the Unfunded Mandates Reform Act of 1995 (UMRA), Public Law 104–4, Federal requires agencies to prepare a written assessment of the costs, benefits, and other effects of proposed or final rules that include a Federal mandate likely to result in the expenditure by State, local, or tribal governments, in the aggregate, or by the private sector, of more than $100 million annually (adjusted for inflation with base year of 1995). (Adjusting this amount by the implicit gross domestic product price deflator for the year 2000 increases it to $109 million.) This NPRM would not result in a cost of $109 million or more to either State, local, or tribal governments, in the aggregate, or the private sector. Thus, this NPRM is not subject to the requirements of sections 202 of the UMRA.

Regulation Identifier Number

The Department of Transportation assigns a regulation identifier number (RIN) to each regulatory action listed in the Unified Agenda of Federal Regulations. The Regulatory Information Service Center publishes the Unified Agenda in April and October of each year. You may use the RIN contained in the heading at the beginning of this document to find this action in the Unified Agenda.

List of Subjects in 49 CFR Part 571

Imports, Motor vehicle safety, Motor vehicles, and Tires.

In consideration of the foregoing, NHTSA proposes to amend 49 CFR part 571 as set forth below.

PART 571—FEDERAL MOTOR VEHICLE SAFETY STANDARDS

1. The authority citation for part 571 continues to read as follows:

Authority: 49 U.S.C. 322, 30111, 30115, 30117 and 30166; delegation of authority at 49 CFR 1.50.

2. Section 571.213 is amended by:

a. Revising the definition of *Child restraint system* in S4, the introductory paragraph of S5.2.1.2, revising S6.1.1(d)(2), S6.1.2(a)(1)(ii), the introductory paragraph of S6.2.3, revising S7.1.2(d) and S7.1.2(e), S7.1.3, S9.1(f), S9.3.2, and the heading and introductory paragraph of S10.2.2;

b. Removing and reserving S7.1.1;

c. Adding S7.1.2(f), S10.2.3 and S10.2.4, and

d. Adding Figures 13, 14, 15, 16, 17a, 17b, 18, 19, 20 and 21, at the end of the section.

The revised, reserved and added text and figures read as follows:

§ 571.213 Standard No. 213; Child restraint systems.

* * * * *

S4. *Definitions.*

* * * * *

Child restraint system means any device, except Type I or Type II seat belts, designed for use in a motor vehicle or aircraft to restrain, seat, or position children who weigh 36 kilograms (kg) (80 lb) or less.

* * * * *

S5.2.1.2 The applicability of the requirements of S5.2.1.1 to a front-facing child restraint, and the conformance of any child restraint other than a car bed to those requirements is determined using the largest of the test dummies specified in S7.1 for use in testing that restraint; provided, that the 6-year-old dummy described in subpart I or subpart N of part 572 of this title and the 10-year-old dummy described in subpart T of part 572 of this title, are not used to determine the applicability of or compliance with S5.2.1.1. A front-facing child restraint system is not required to comply with S5.2.1.1 if the target point on either side of the dummy's head is below a horizontal plane tangent to the top of * * *

S6.1.1 *Test conditions.*

* * * * *

(d)(1) * * *

(2) When using the test dummies specified in 49 CFR Part 572, subparts N, P, R, or T, performance tests under S6.1 are conducted at any ambient temperature from 20.6 °C to 22.2 °C and at any relative humidity from 10 percent to 70 percent.

* * * * *

S6.1.2 * * *

(a) * * *

(ii) *Belt-positioning seats.* A belt-positioning seat is positioned on either outboard seating position of the standard seat assembly in accordance with the manufacturer's instructions provided with the system pursuant to S5.6.1, except that only the standard vehicle lap and shoulder belt is used to fasten the belt-positioning seat. No tether strap or any other supplemental device is used to attach the belt-positioning seat to the standard seat assembly. Place the booster seat on the standard seat assembly such that it is centered between the lap belt anchor positions. Position the base of the booster rearward as far as possible against the seat back of the standard seat assembly by pushing the booster seat rearward until the intersection of the booster's back and bottom contacts the intersection of the standard bench seat's back and base cushion.

* * * * *

S6.2.3 Pull the sling tied to the dummy restrained in the child restraint system and apply the following force: 50 N for a system tested with a newborn dummy (49 CFR part 572, subpart K); 90 N for a system tested with a 12-month-old dummy (49 CFR part 572, subpart R); 200 N for a system tested with a 3-year-old dummy (49 CFR part 572, subpart P); 270 N for a system tested with a 6-year-old dummy (49 CFR part 572, subpart N or I); 350 N for a system tested with a weighted 6-year-old dummy (49 CFR part 572, subpart S); or 437 N for a system tested with a 10-year-old-dummy (49 CFR part 572, subpart T). The force is applied in the manner illustrated in Figure 4 and as follows:

* * * * *

S7.1.1 [Reserved]

S7.1.2 * * *

* * * * *

(d) A child restraint that is recommended by its manufacturer in accordance with S5.5 for use either by children in a specified mass range that includes any children having a mass greater than 18 kg (40 lb) but not greater than 22.7 kg (50 lb) or by children in a specified height range that includes any children whose height is greater than 1100 mm but not greater than 1250 mm is tested with a 49 CFR part 572, subpart N dummy (Hybrid III 6-year-old dummy).

(e) A child restraint that is recommended by its manufacturer in accordance with S5.5 for use either by children in a specified mass range that includes any children having a mass greater than 22.7 kg (50 lb) but not greater than 30 kg (65 lb) or by children in a specified height range that includes any children whose height is greater than 1100 mm but not greater than 1250 mm is tested with a 49 CFR part 572, subpart N dummy (Hybrid III 6-year-old

dummy) and with a part 572, subpart S dummy (Hybrid III 6-year-old weighted dummy).

(f) A child restraint that is manufactured on or after [compliance date of final rule] and that is recommended by its manufacturer in accordance with S5.5 for use either by children in a specified mass range that includes any children having a mass greater than 30 kg (65 lb) or by children in a specified height range that includes any children whose height is greater than 1250 mm is tested with a 49 CFR part 572, subpart T dummy (Hybrid III 10-year-old dummy).

S7.1.3 Voluntary use of alternative dummies. At the manufacturer's option (with said option irrevocably selected prior to, or at the time of, certification of the restraint), with regard to testing a child restraint manufactured before August 1, 2010, when this section specifies use of the 49 CFR part 572, subpart N (Hybrid III 6-year-old dummy) test dummy, the test dummy specified in 49 CFR part 572, subpart I (Hybrid II 6-year-old dummy) may be used in place of the subpart N test dummy.

* * * * *

S9.1 Type of clothing.

* * * * *

(f) *Hybrid III 6-year-old dummy (49 CFR part 572, subpart N), Hybrid III 6-year-old weighted dummy (49 CFR part 572, subpart S), and Hybrid III 10-year-old dummy (49 CFR part 572, subpart T).* When used in testing under this standard, the dummies specified in 49 CFR part 572, subparts N, S, and T, are clothed in a light-weight cotton stretch short-sleeve shirt and above-the-knee pants, and size 12½ M sneakers with rubber toe caps, uppers of dacron and cotton or nylon and a total mass of 0.453 kg.

* * * * *

S9.3.2 When using the test dummies conforming to part 572 subparts N, P, R, S, or T, prepare the dummies as specified in this paragraph. Before being used in testing under this standard, dummies must be conditioned at any ambient temperature from 20.6 °C to 22.2 °C and at any relative humidity from 10 percent to 70 percent, for at least 4 hours.

* * * * *

S10.2.2 *Three-year-old dummy (49 CFR part 572, subpart P), Hybrid II 6-year-old dummy (49 CFR part 572, subpart I), Hybrid III 6-year-old dummy (49 CFR part 572, subpart N), Hybrid III 6-year-old weighted dummy (49 CFR part 572, subpart S), and Hybrid III 10-year-old dummy (49 CFR part 572, subpart T) positioned in child restraints other than belt-positioning seats).* Position the 3-year-old dummy and Hybrid II 6-year-old dummy according to the instructions for child positioning that the restraint manufacturer provided with the system in accordance with S5.6.1 or S5.6.2, while conforming to the provisions in S10.2.2. When using the Hybrid III 6-year-old dummy, the Hybrid III 6-year-old weighted dummy and the Hybrid III 10-year-old dummy to test child restraints other than belt-positioning seats, position the dummy according to the instructions for child positioning that the restraint manufacturer provided with the system in accordance with S5.6.1 or S5.6.2, while conforming to the provisions in S10.2.2.

* * * * *

S10.2.3 *Hybrid III 6-year-old dummy (49 CFR part 572, subpart N) in belt-positioning seat.* When using the Hybrid III 6-year-old dummy (49 CFR part 572, subpart N) to test belt-positioning seats, position the dummy in the child restraint as follows:

(a) Place the dummy in the booster seat so that the midsagittal line of the dummy is coincident with the centerline of the booster.

(b) Measure the X and Z locations of the left and right shoulder pivots. Position the dummy so that the difference between the X and Z values for these two points is less than or equal to 1 cm (see Figure 13).

(c) As illustrated in Figure 14 of this section, calculate the H-point location of the dummy relative to the standard seat assembly Z point (see Figure 1B of this standard) by:

(1) Measuring the X and Z coordinates of the knee pivot (X_{KP} and Z_{KP}) and head center of gravity (X_{CG} and Z_{CG});

(2) Mathematically locating the intersection point of two circles using the knee pivot and head center of gravity as the centers and the known dummy anthropometric lengths as radii. The equations for calculating the H-point are as follows:

$$X_{HP} = X_{CG} + \frac{A\left(X_{KP} - X_{CG}\right)}{B} + \frac{\sqrt{473^2 - A^2}\left(Z_{KP} - Z_{CG}\right)}{B}$$

$$Z_{HP} = Z_{CG} + \frac{A\left(Z_{KP} - Z_{CG}\right)}{B} - \frac{\sqrt{473^2 - A^2}\left(X_{KP} - X_{CG}\right)}{B}$$

Where:

$$A = \frac{\left(473^2 - 238^2 + B^2\right)}{2B}$$

$$B = \sqrt{\left(X_{KP} - X_{CG}\right)^2 + \left(Z_{KP} - Z_{CG}\right)^2}$$

(3) Use the H-point location and head center of gravity location to determine the torso angle relative to vertical. This angle is calculated using

$$\text{Torso Angle} = \arctan\left(\frac{X_{HP} - X_{CG}}{Z_{CG} - Z_{HP}}\right)\left(\frac{180}{\pi}\right)$$

(4) Adjust the dummy until the torso angle is 14±0.5 degrees from vertical.

(5) Secure the dummy and booster with belt restraint, following booster manufacturer's instructions for routing the shoulder and lap belts. Only the standard vehicle lap and shoulder belt is used to fasten the belt-positioning seat. No tether strap or any other supplemental device is used to attach the belt-positioning seat to the standard seat assembly. Apply the belt tensions specified in S6.1.2(d) of this standard.

(6) Locate the shoulder and lap belts as follows while conforming to the booster manufacturer's belt-routing instructions. If it is not possible to do both, follow the manufacturer's instructions:

(i) Place the outboard edge of the shoulder belt inside of the outer edge of the chest jacket (see Figure 15) or as close to the outer edge of the chest jacket as possible.

(ii) The straight line distance from the bottom of the dummy's chin to the center of the shoulder belt/middle of the sternum along the dummy's midsagittal line is 15.5±0.5 cm (see Figure 16).

(iii) The shoulder belt angle relative to horizontal is 50°±10°. If it is not feasible to achieve the specified shoulder belt angle, position the shoulder belt as near as possible to the 50° angle.

(iv) Place the lap belt such that the top of the belt is 2.54 cm or more below the top rim of the pelvis molded skin at the dummy's midsagittal line (illustrated Figure 17). If it is not feasible to locate the lap belt at least 2.54 cm below the top of the pelvis due to the booster seat's routing path, position belt as low as possible on pelvis.

(7) Place upper arms as close as possible to, and in alignment with, the sides of the upper torso. If possible, bend arms at the elbows such that the hands are resting on the booster seat cushion; otherwise bend lower arm perpendicular to upper arm and have hands pointed forward.

(8) Level dummy's head ± 1° off of horizontal.

S10.2.4 *Hybrid III 10-year-old dummy (49 CFR Part 572, Subpart T) in belt-positioning seat.* When using the Hybrid III 10-year-old child dummy (49 CFR Part 572, Subpart T) to test belt-positioning seats, position the dummy in the child restraint as follows:

(a) Set the dummy's neck angle at the SP–16 setting (Figure 17a). See also Figure 20 of the [Draft] Procedures for Assembly, Disassembly and Inspection (PADI) of the Hybrid III 10-year-old Child Test Dummy (HIII–10C), [April 2005] for more detail.

(b) Set the dummy's lumbar angle at the SP–12 setting (''SP'' means standard posture), see Figure 17b. This is done by aligning the notch on the lumbar adjustment bracket with the SP–12 notch on the lumbar attachment. See also Figure 45 of PADI for more detail.

(c) Place the dummy in the booster seat so that the midsagittal line of the dummy is coincident with the centerline of the booster.

(d) Measure the X and Z locations of the left and right shoulder pivots. Position the dummy so that the difference between the X and Z values for these two points is less than or equal to 1 cm (see Figure 18).

(e) As illustrated in Figure 19 of this section, calculate the H-point location of the dummy relative to the standard seat assembly Z point (see Figure 1B of this standard) by:

(1) Measuring the X and Z coordinates of the knee pivot (X_{KP} and Z_{KP}) and head center of gravity (X_{CG} and Z_{CG});

(2) Mathematically locating the intersection point of two circles using the knee pivot and head center of gravity as the centers and the known dummy anthropometric lengths as radii. The equations for calculating the H-point are as follows:

$$X_{HP} = X_{CG} + \frac{A\left(X_{KP} - X_{CG}\right)}{B} + \frac{\sqrt{527^2 - A^2}\left(Z_{KP} - Z_{CG}\right)}{B}$$

$$Z_{HP} = Z_{CG} + \frac{A\left(Z_{KP} - Z_{CG}\right)}{B} - \frac{\sqrt{527^2 - A^2}\left(X_{KP} - X_{CG}\right)}{B}$$

Where:

$$A = \frac{\left(572^2 - 288^2 + B^2\right)}{2B}$$

$$B = \sqrt{\left(X_{KP} - X_{CG}\right)^2 + \left(Z_{KP} - Z_{CG}\right)^2}$$

(3) Use the H-point location and head center of gravity location to determine the torso angle relative to vertical. This angle is calculated using

$$\text{Torso Angle} = \arctan\left(\frac{X_{HP} - X_{CG}}{Z_{CG} - Z_{HP}}\right)\left(\frac{180}{\pi}\right)$$

(4) Adjust the dummy until the torso angle is 14±0.5 degrees from vertical.

(5) Secure the dummy and booster with belt restraint, following booster manufacturer's instructions for routing the shoulder and lap belts. Only the standard vehicle lap and shoulder belt is used to fasten the belt-positioning seat. No tether strap or any other supplemental device is used to attach the belt-positioning seat to the standard seat assembly. Apply the belt tensions specified in S6.1.2(d) of this standard.

(6) Locate the shoulder and lap belts as follows while conforming to the booster manufacturer's belt routing instructions. If it is not possible to do both, follow the booster manufacturer's instructions:

(i) Place the outboard edge of the shoulder belt inside of the outer edge of the chest jacket (see Figure 20) or as close to the outer edge of the chest jacket as possible.

(ii) The straight line distance from the bottom of the dummy's chin to the center of the shoulder belt/middle of the sternum along the dummy's midsagittal line is 16±0.5 cm (see Figure 21).

(iii) The shoulder belt angle relative to horizontal is 50°±10°. If it is not feasible to achieve the specified shoulder belt angle, position the shoulder belt as near as possible to the 50° angle.

(iv) Place the lap belt such that the top of the belt is 2.54 cm or more below the top rim of the pelvis molded skin at the dummy's midsagittal line (illustrated Figure 21). If it is not feasible to locate the lap belt at least 2.54 cm below the top of the pelvis due to the booster seat's routing path, position belt as low as possible on pelvis.

(7) Place upper arms as close as possible to, and in alignment with, the sides of the upper torso. If possible, bend arms at the elbows such that the hands are resting on the booster seat cushion; otherwise bend lower arm perpendicular to upper arm and have hands pointed forward.

(8) Level dummy's head ±1° off of horizontal.

* * * * *

BILLING CODE 4910–59–P

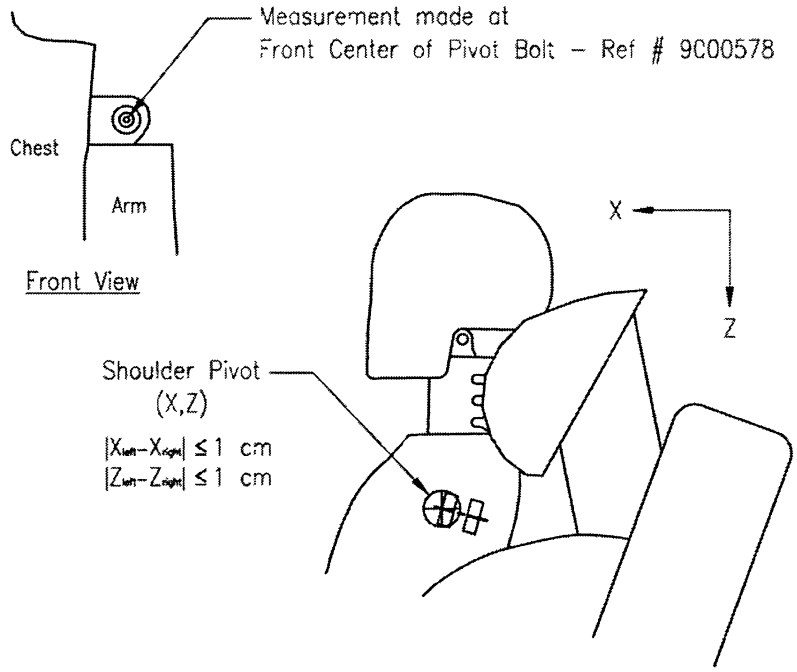

Figure 13. HIII-6C Shoulder Pivot Bolt Alignment

(Note: Ref # 9000578 refers to the drawing number for the HIII-6C dummy)

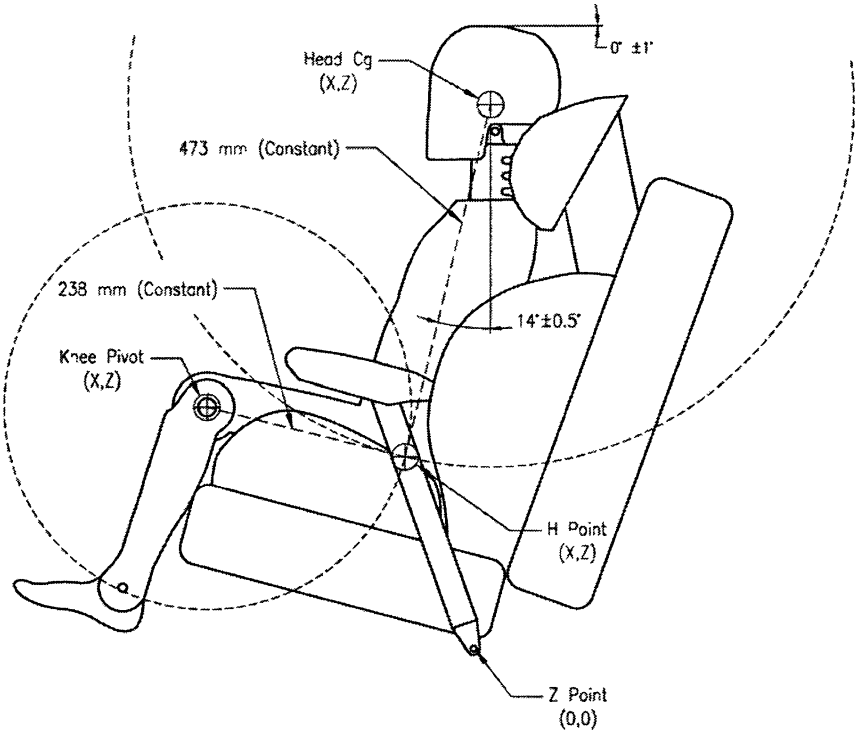

Figure 14. Locating the H-Point so that HIII-6C Torso Angle is 14 ± 0.5 Degrees from Vertical

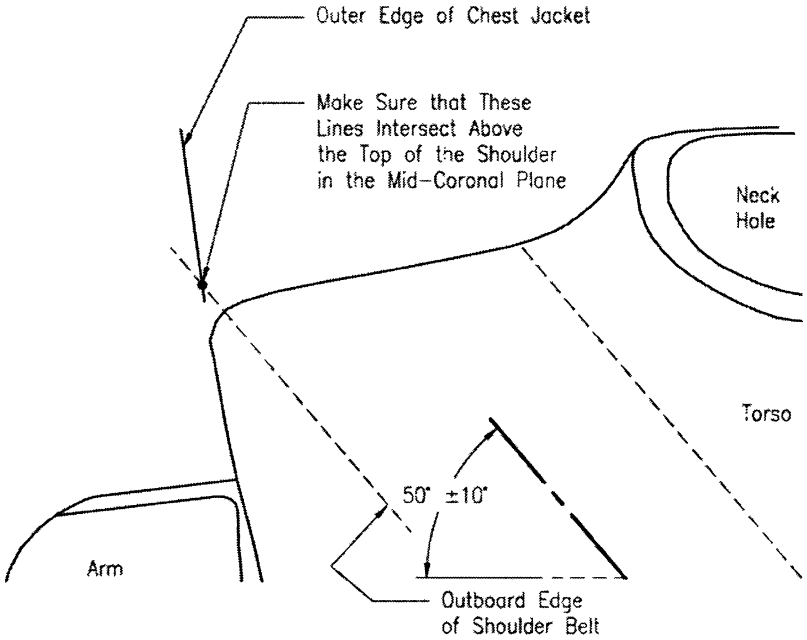

Figure 15. Shoulder Belt Placement for HIII-6C Dummy

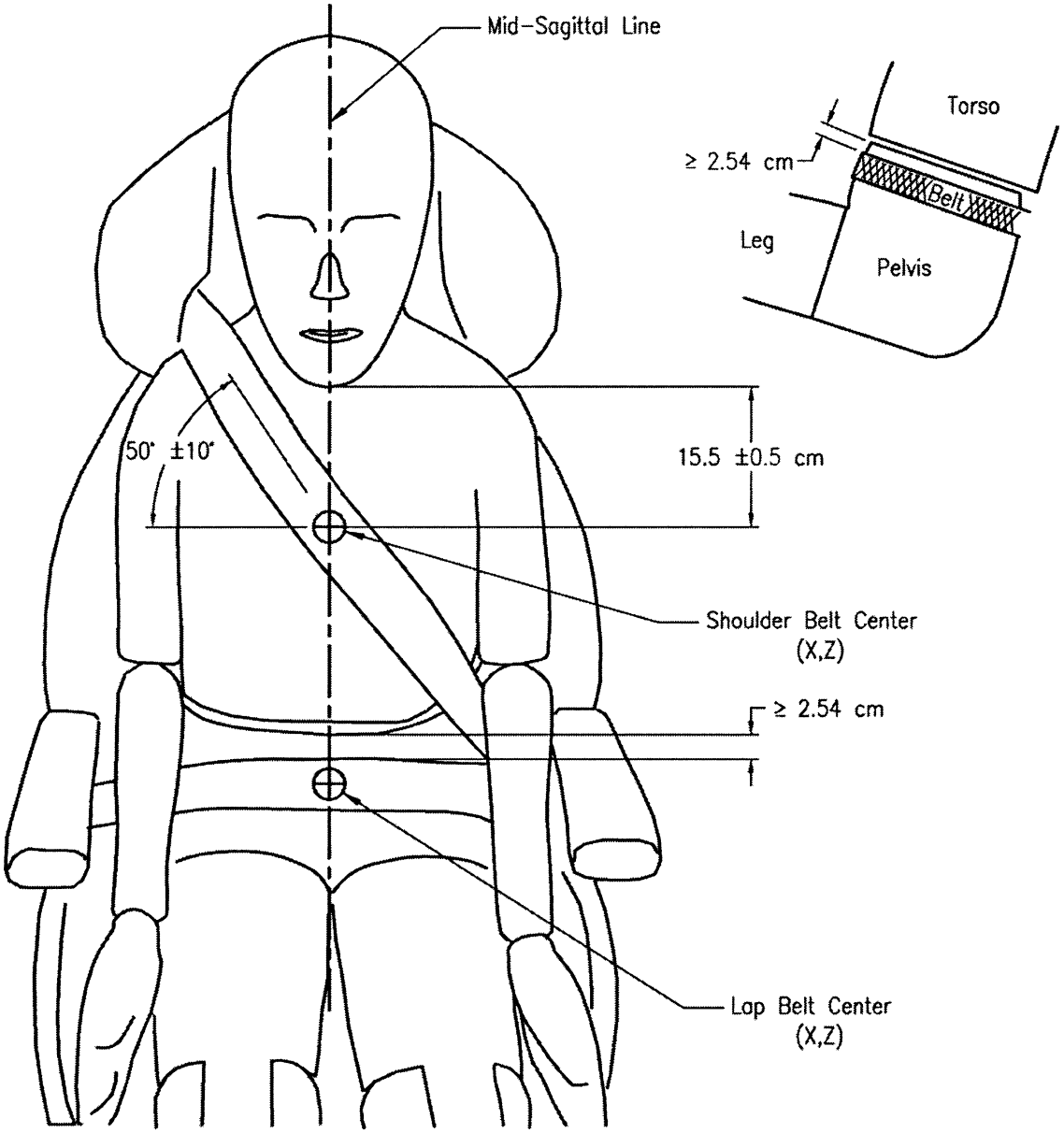

Figure 16. Overall Belt Placement for HIII-6C Dummy

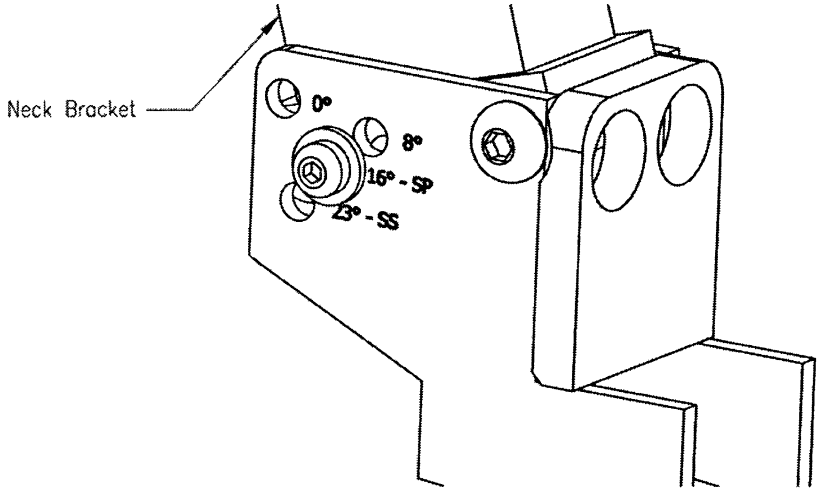

Figure 17a. HIII-10C Dummy Neck Angle Setting is SP-16 Degrees

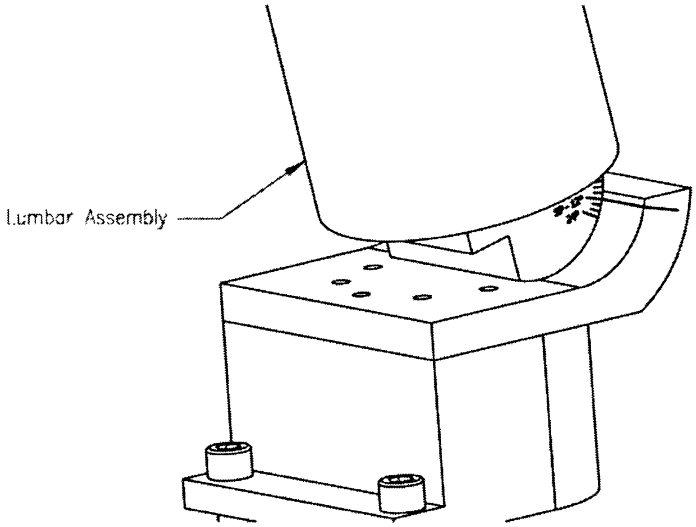

Figure 17b. HIII-10C Dummy Lumbar Angle Setting is SP-12 Degrees

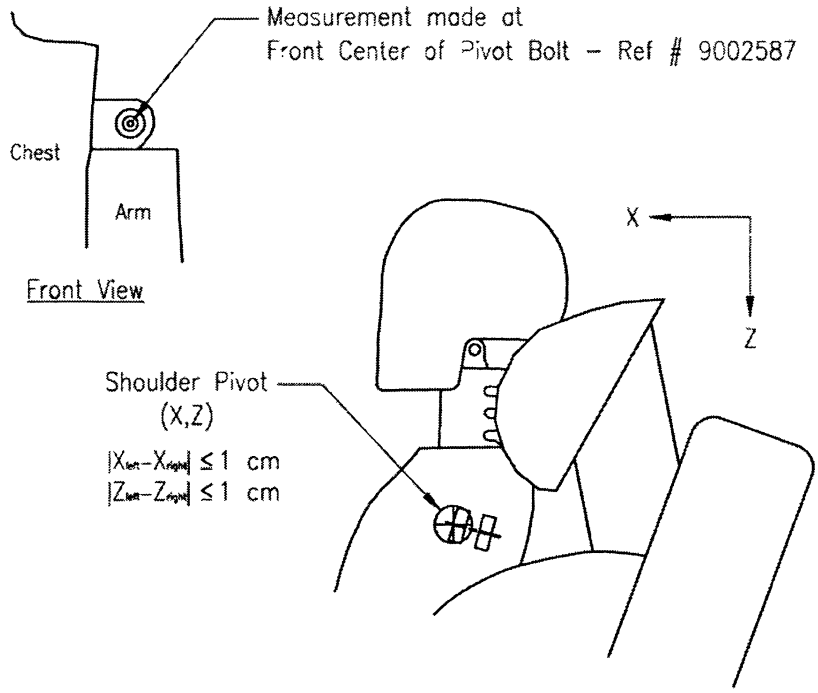

Figure 18. HIII-10C Dummy Shoulder Pivot Bolt Alignment

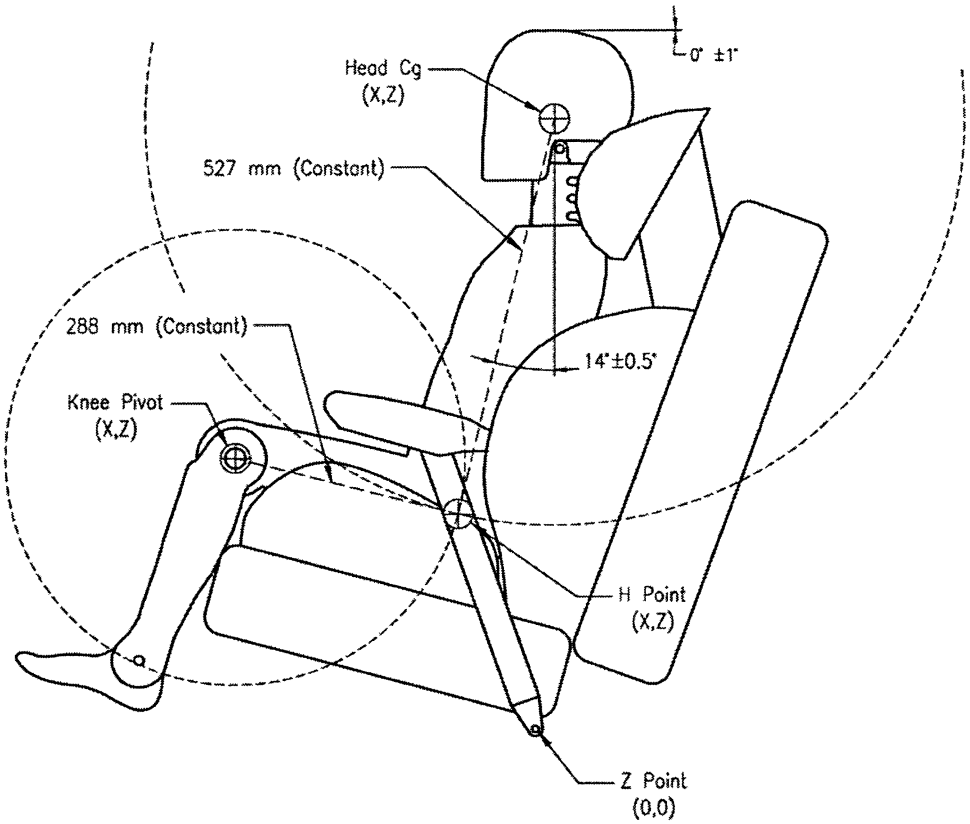

Figure 19. Locating the H-Point so that HIII-10C Torso Angle is 14 ± 0.5 Degrees from Vertical

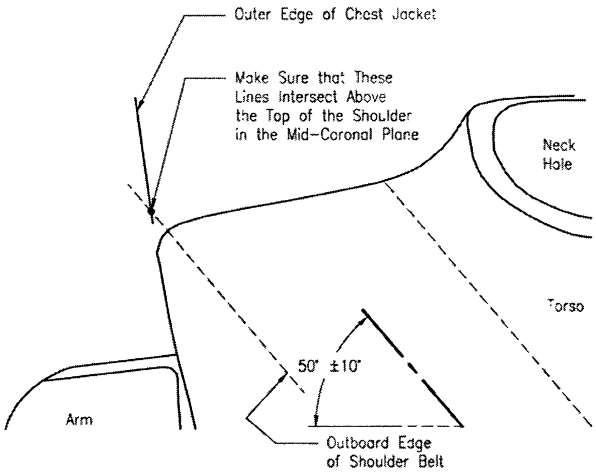

Figure 20. Shoulder Belt Placement for HIII-10C Dummy

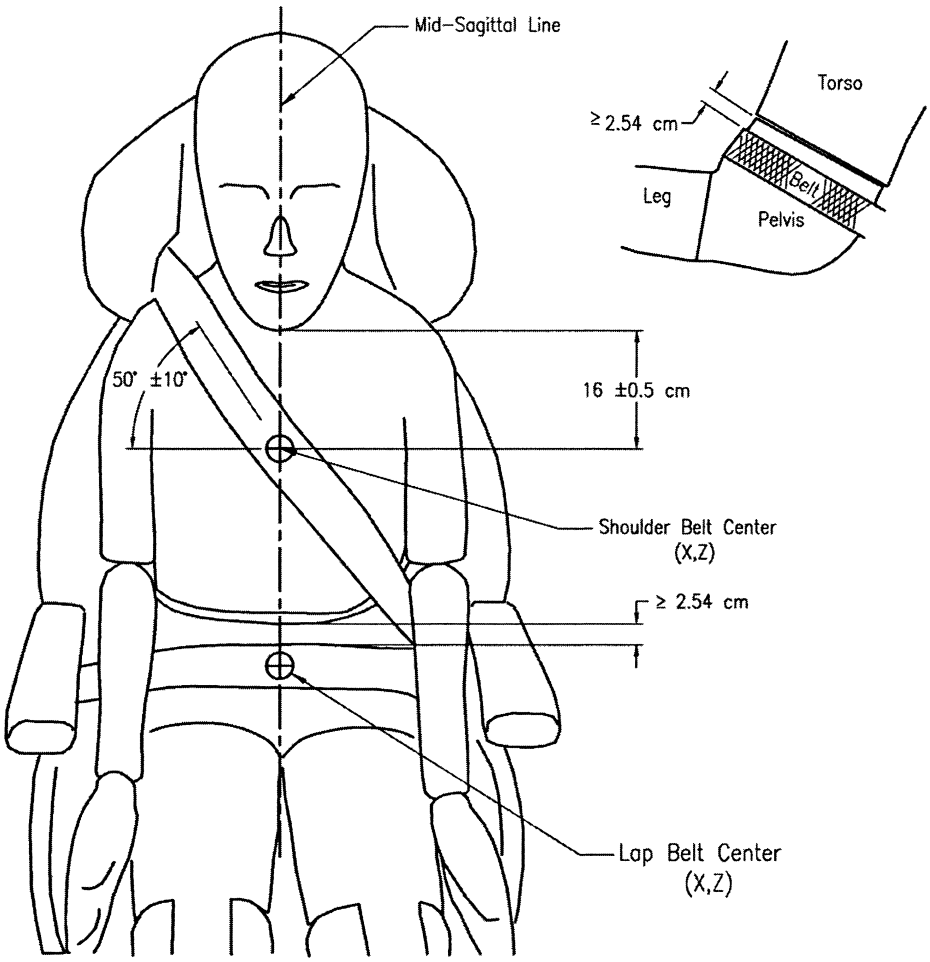

Figure 21. Overall Belt Placement for HIII-10C Dummy

Issued: January 11, 2008.

Stephen R. Kratzke,

Associate Administrator for Rulemaking.

[FR Doc. E8–856 Filed 1–22–08; 8:45 am]

BILLING CODE 4910–59–C

Notices

Federal Register

Vol. 73, No. 15

Wednesday, January 23, 2008

This section of the FEDERAL REGISTER contains documents other than rules or proposed rules that are applicable to the public. Notices of hearings and investigations, committee meetings, agency decisions and rulings, delegations of authority, filing of petitions and applications and agency statements of organization and functions are examples of documents appearing in this section.

DEPARTMENT OF AGRICULTURE

Submission for OMB Review; Comment Request

January 16, 2008.

The Department of Agriculture has submitted the following information collection requirement(s) to OMB for review and clearance under the Paperwork Reduction Act of 1995, Public Law 104–13. Comments regarding (a) whether the collection of information is necessary for the proper performance of the functions of the agency, including whether the information will have practical utility; (b) the accuracy of the agency's estimate of burden including the validity of the methodology and assumptions used; (c) ways to enhance the quality, utility and clarity of the information to be collected; (d) ways to minimize the burden of the collection of information on those who are to respond, including through the use of appropriate automated, electronic, mechanical, or other technological collection techniques or other forms of information technology should be addressed to: Desk Officer for Agriculture, Office of Information and Regulatory Affairs, Office of Management and Budget (OMB), *OIRA_Submission@OMB.EOP.GOV* or fax (202) 395–5806 and to Departmental Clearance Office, USDA, OCIO, Mail Stop 7602, Washington, DC 20250–7602. Comments regarding these information collections are best assured of having their full effect if received within 30 days of this notification. Copies of the submission(s) may be obtained by calling (202) 720–8681.

An agency may not conduct or sponsor a collection of information unless the collection of information displays a currently valid OMB control number and the agency informs potential persons who are to respond to the collection of information that such persons are not required to respond to the collection of information unless it displays a currently valid OMB control number.

Rural Utilities Service

Title: 7 CFR Part 1744, Subpart B, Lien Accommodations and Subordination Policy.

OMB Control Number: 0572–0126.

Summary of Collection: The Rural Utilities Service (RUS) is a credit agency of the U.S. Department of Agriculture (USDA). It makes mortgage loans and loan guarantees to finance electric, telecommunications, and water and waste facilities in rural areas. The Telecommunications Act of 1996 mandates that universally available and affordable telecommunications services, including advanced services, be made available to all U.S. citizens—weather in rural areas or city centers, affluent, or poor communities. In support of this mandate, RUS is amending its regulation to ensure that, with the assistance of advanced telecommunications technology, rural citizens be provided the same economic, educational, and health care benefits available in the large metropolitan areas.

Need and Use of the Information: This regulation will help RUS facilitate funding from non-RUS sources in order to meet the growing capital needs of rural Local Exchange Carriers and enable the providers to compete in an expanding number of telecommunications services. RUS will use the information to provide ''automatic'' approval for borrowers requesting lien accommodations that meet the required financial tests. These tests are designed to ensure that the financial strength of the borrower is more than sufficient to protect the government's loan security interests; hence, the lien accommodations will not adversely affect the government's financial interests.

Description of Respondents: Business or other for-profit; not-for-profit institutions.

Number of Respondents: 30.

Frequency of Responses: Reporting: On occasion.

Total Burden Hours: 23.

Rural Utilities Service

Title: Electric System Emergency Restoration Plan.

OMB Control Number: 0572–0140.

Summary of Collection: Electric power systems have been identified in Presidential Decision Directive 63, May 1998, as one of the critical infrastructures of the United States. The term ''critical infrastructure'' is defined in section 1016(e) of the USA Patriot Act of 2001 (42 U.S.C. 5195c(e)). To ensure that the electric infrastructure in rural America is adequately protected, Rural Utilities Service requires that all current electric borrowers enhance an existing Emergency Restoration Plan (ERP) or, if none exists, develop and maintain an ERP.

Need and Use of the Information: Rural Development Utilities Programs (RDUP) requires that all current electric borrowers conduct a Vulnerability and Risk Assessment (VRA) of its respective systems and utilize the results of this assessment to enhance an existing ERP or create an ERP if none exists. The ERP provides written procedures detailing response and restoration efforts in the event of a major system outage resulting from a natural or man made disaster. RDUP requires each electric borrower to provide annually a self-certification, in writing, that an ERP exists and that an initial VRA has been performed. If this information were not collected, vulnerabilities may exist in the electric system infrastructure. The result would be increased risk to public safety and may affect the Government loan security.

Description of Respondents: Not-for-profit institutions; business or other for-profit.

Number of Respondents: 676.

Frequency of Responses: Reporting: Annually.

Total Burden Hours: 338.

Charlene Parker,

Departmental Information Collection Clearance Officer.

[FR Doc. E8–1043 Filed 1–22–08; 8:45 am]

BILLING CODE 3410–15–P

DEPARTMENT OF AGRICULTURE

Commodity Credit Corporation

Farm Service Agency

Request for Extension With Revision of a Currently Approved Information Collection; Representation for CCC and FSA Loans Authorization To File a Financing Statement

AGENCY: Commodity Credit Corporation and Farm Service Agency, USDA.

ACTION: Notice; request for comments.

SUMMARY: In accordance with the Paperwork Reduction Act of 1995, the Commodity Credit Corporation (CCC) and the Farm Service Agency (FSA) is seeking from all interested individuals and organizations on an extension with revision of a currently approved information collection associated with form CCC–10 used to support the CCC and FSA Farm Loan Programs (FLPs).

DATES: Comments on this notice must be received on or beforeMarch 24, 2008 to be assured consideration.

FOR FURTHER INFORMATION CONTACT: Chris Kyer, USDA, Farm Service Agency, Price Support Division, phone (202) 720–7935.

ADDRESSES: We invite you to submit comments on this Notice. In your comment, include volume, date and page number of this issue of the **Federal Register**. You may submit comments by any of the following methods:

E-mail: Send comments to: *chris.kyer@wdc.usda.gov*.

Fax: (202) 690–1536.

Mail: Chris Kyer, Program Manager, USDA, Farm Service Agency, Price Support Division, 1400 Independence Avenue, SW., STOP 0512, Washington, DC 20250–0512.

Comments also should be to the Desk Officer for Agriculture, Office of Information and Regulatory Affairs, Office of Management and Budget, Washington, DC 20503.

SUPPLEMENTARY INFORMATION: *Title:* Representations for Commodity Credit Corporation or Farm Service Agency Loans and Authorization to File a Financing Statement and Related Documents.

OMB Control Number: 0560–0215.

Expiration Date of Approval: September 30, 2008.

Type of Request: Extension and revision.

Abstract: Form CCC–10 is necessary to: (a) Gather or verify basic data provided by a CCC or FSA loan applicant that is required on a financing statement filed by CCC or FSA to perfect a security interest in collateral used to secure a loan; and (b) obtain loan applicant permission to file a financing statement prior to the execution of a security agreement.

Estimate of Burden: Public reporting burden for this collection of information is estimated to average 5 minutes per response. The average travel time, which is included in the total annual burden, is estimated to be 1 hour per respondent.

Estimated Number of Respondents: 55,500.

Estimated Number of Responses per Respondent: 1.

Estimated Total Annual Burden On Respondents: 32,357 hours.

Comments are invited on the following:

(1) Whether the collection of information is necessary for the proper performance of the functions of the agency, including whether the information will have practical utility;

(2) The accuracy of the agency's estimate of burden, including the validity of the methodology and assumptions used;

(3) Ways to enhance the quality, utility and clarity of the information to be collected; or;

(4) Ways to minimize the burden of the collection of information on those who are to respond, including through the use of appropriate automated, electronic, mechanical, or other technological collection techniques or other forms of information technology.

All comments received in response to this notice, including names and addresses when provided, will be a mater of public records. Comments will be summarized and included in the request for OMB approval of the information collection.

Signed in Washington, DC, on January 15, 2008.

Teresa C. Lasseter,

Executive Vice President, Commodity Credit Corporation, Administrator, Farm Service Agency.

[FR Doc. E8–1044 Filed 1–22–08; 8:45 am]

BILLING CODE 3410–05–P

DEPARTMENT OF AGRICULTURE

Forest Service

Bull Run Watershed Management Unit Agreement, Multnomah County, OR

AGENCY: Forest Service, USDA.

ACTION: Notice of Availability of Final Agreement.

SUMMARY: The Mt. Hood National Forest (Forest) in coordination with the City of Portland Water Bureau (City) has prepared a new Bull Run Watershed Management Unit Agreement pursuant to Public Law 95–200, section 2(d). This Agreement will guide and be applicable to all occupancy, use, and management of the Bull Run Watershed Management Unit by the City and the Forest. This Agreement replaces the 1979 Memorandum of Understanding (MOU). This new Agreement provides the revised administrative direction and agreements needed to structure the parties' roles, responsibilities, business processes, and working relationships for the coming decades. The Agreement was approved on December 17, 2007. A copy of the Final Agreement is available on the following Internet Web sites, *http://www.fs.fed.us/r6/mthood* under projects & plans, or *http://www.portlandonline.com/water/*. Hard copies of the Final Agreement may be obtained by contacting the contact person listed below.

FOR FURTHER INFORMATION CONTACT: Questions about the Agreement or requests for copies should be directed to Rick Acosta, Mt. Hood National Forest, Public Affairs Officer, 16400 Champion Way, Sandy, Oregon 97055–7248, (e-mail: *racosta@fs.fed.us*), or phone: 503–668–1791, or Terry Black, City of Portland Water Bureau, Outreach Specialist, 1120 SW., 5th Avenue, Portland, OR 97204, (e-mail: *Terry.Black@ci.portland.or.us*), or phone: 503–823–1168.

SUPPLEMENTARY INFORMATION: The Bull Run watershed, located in the Mt. Hood National Forest, is the largest and oldest of the several water supplies serving the Portland metropolitan area. Its role in the region's past, present and future, along with its unprecedented level of water quality, make it a high priority for both the City and the Forest Service to take the steps necessary to ensure its continuing quality, productivity and protection.

As the City and the Forest Service began to look closely at the administrative and policy frameworks that guided their interactions they noted that much of that framework dated from the late 1970s and arose from the direction provided in the 1977 Bull Run Management Act (Pub. L. 95–200). As little of that framework had been updated over time, its applicability to current issues and needs is limited. Thus, this new agreement replaces the 1979 MOU, aligns practice with existing legislation, and provides the revised administrative direction and agreements needed to structure the parties' roles, responsibilities, business processes, and working relationships for the coming decades.

The City and the Forest Service, along with community interests in the greater Portland metropolitan area, have had a long and sometimes contentious history of working together to protect and manage the valuable ecological and water resources of the Bull Run watershed. But with the coming of the 21st century, the issues and conflicts in policy and direction that held attention for the last fifty years have all but disappeared. Now, the parties are turning to the future, responding to new

fiscal realities, and working together to frame the structures, processes, roles and responsibilities that will allow them to act effectively as joint stewards of this valuable regional and national resource, in concert with citizens who increasingly desire to redeem their responsibilities in stewardship of their lands.

Officials from the City of Portland and the Mount Hood National Forest prepared this new Agreement between the City and the Forest Service to identify preferred administrative arrangements for their joint management of the Bull Run Watershed Management Unit. The purpose and hope of the Agreement is to document a new and more relevant relationship between the City and the Forest Service for the long-term stewardship of the Bull Run Watershed Management Unit that is built on a firm foundation of citizen involvement.

The final Agreement was approved on December 17, 2007. In completing the Agreement, the Forest and the City responded to comments received during the comment period and also jointly prepared a Report to the Community. This Report discussed the history and background of discussions that led to the new agreement. This Report is also available on both of the Web sites listed above. The Agency officials are Gary Larsen, Forest Supervisor, Mt. Hood National Forest for the Forest Service, and the City official is Randy Leonard, Commissioner-in-Charge, City of Portland Water Bureau for the City of Portland.

(Authority: Sec. 2, Pub. L. 95–200, 91 Stat. 1425 (16 U.S.C. 482b)

Dated: January 2, 2008.

Gary L. Larsen,

Forest Supervisor.

[FR Doc. 08–229 Filed 1–22–08; 8:45 am]

BILLING CODE 3410–11–M

DEPARTMENT OF AGRICULTURE

Natural Resources Conservation Service

Notice of Proposed Changes to the Natural Resources Conservation Service's National Handbook of Conservation Practices

AGENCY: Natural Resources Conservation Service (NRCS), USDA.

ACTION: Notice of availability of proposed changes in the NRCS National Handbook of Conservation Practices for public review and comment.

SUMMARY: It is NRCS's intention to issue a series of new or revised conservation practice standards in its National Handbook of Conservation Practices. These standards include: ''Filter Strip (Code 393),'' ''Hillside Ditch (Code 423),'' ''Access Control (formerly titled Use Exclusion) (Code 472),'' ''Drainage Water Management (Code 554),'' ''Vegetated Treatment Area (formerly titled Wastewater Treatment Strip) (Code 635),'' and ''Constructed Wetland (Code 656).'' NRCS State Conservationists who choose to adopt these practices for use within their States will incorporate them into Section IV of their respective electronic Field Office Technical Guides. These practices may be used in conservation systems that treat highly erodible land (HEL) or on land determined to be a wetland.

EFFECTIVE DATES: Comments will be received for a 30-day period commencing with this date of publication. Final versions of these new or revised conservation practice standards will be adopted after the close of the 30-day period, after consideration of all comments.

ADDRESSES: Comments should be submitted by one of the following methods:

1. In writing to: National Agricultural Engineer, NRCS, Post Office Box 2890, Washington, DC 20013–2890; or

2. Electronically by e-mail to: *daniel.meyer@wdc.usda.gov.*

FOR FURTHER INFORMATION CONTACT: Copies of these standards can be downloaded and/or printed from the following Web site: *ftp://ftp-fc.sc.egov.usda.gov/NHQ/practice-standards/federal-register/.* Also, copies of these standards are available from National Headquarters in Washington, DC. Submit inquiries in writing to Daniel Meyer, National Agricultural Engineer, NRCS, Post Office Box 2890, Room 6139–S, Washington, DC 20013–2890; or electronically to: *daniel.meyer@wdc.usda.gov.*

SUPPLEMENTARY INFORMATION: Section 343 of the Federal Agriculture Improvement and Reform Act of 1996 requires NRCS to make available for public review and comment all proposed revisions to conservation practice standards used to carry out the HEL and wetland provisions of the law. For the next 30 days, NRCS will receive comments relative to the proposed changes. Following that period, a determination will be made by NRCS regarding disposition of those comments and a final determination of changes will be made.

Signed in Washington, DC, January 9, 2008.

Arlen L. Lancaster,

Chief.

[FR Doc. E8–1115 Filed 1–22–08; 8:45 am]

BILLING CODE 3410–16–P

DEPARTMENT OF COMMERCE

Office of the Secretary

Estimates of the Voting Age Population for 2007

AGENCY: Office of the Secretary, Commerce.

ACTION: General Notice announcing population estimates.

SUMMARY: This Notice announces the voting age population estimates, as of July 1, 2007, for each state and the District of Columbia. We are giving this notice in accordance with the 1976 amendment to the Federal Election Campaign Act, Title 2, United States Code, Section 441a(e).

FOR FURTHER INFORMATION CONTACT: Enrique Lamas, Chief, Population Division, Bureau of the Census, Department of Commerce, Room HQ–5H174, Washington, DC 20233, telephone 301–763–2071.

SUPPLEMENTARY INFORMATION: Under the requirements of the 1976 amendment to the Federal Election Campaign Act, Title 2, United States Code, Section 441a(e), I hereby give notice that the estimates of the voting age population for July 1, 2007, for each state and the District of Columbia are as shown in the following table.

ESTIMATES OF THE POPULATION OF VOTING AGE FOR EACH STATE AND THE DISTRICT OF COLUMBIA: JULY 1, 2007

Area	Population 18 and over
United States	227,719,424
Alabama	3,504,314
Alaska	501,260
Arizona	4,668,889
Arkansas	2,134,260
California	27,169,291
Colorado	3,668,836
Connecticut	2,682,093
Delaware	659,118
District of Columbia	474,572
Florida	14,207,683
Georgia	7,013,141
Hawaii	997,694
Idaho	1,091,690
Illinois	9,653,389
Indiana	4,758,771
Iowa	2,276,643
Kansas	2,079,915
Kentucky	3,237,501

ESTIMATES OF THE POPULATION OF VOTING AGE FOR EACH STATE AND THE DISTRICT OF COLUMBIA: JULY 1, 2007—Continued

Area	Population 18 and over
Louisiana	3,213,644
Maine	1,037,740
Maryland	4,259,547
Massachusetts	5,016,899
Michigan	7,624,966
Minnesota	3,937,339
Mississippi	2,150,081
Missouri	4,453,585
Montana	738,363
Nebraska	1,328,426
Nevada	1,905,380
New Hampshire	1,017,642
New Jersey	6,622,131
New Mexico	1,469,639
New York	14,884,315
North Carolina	6,843,352
North Dakota	496,906
Ohio	8,715,043
Oklahoma	2,717,809
Oregon	2,884,547
Pennsylvania	9,646,073
Rhode Island	824,717
South Carolina	3,347,792
South Dakota	599,324
Tennessee	4,685,233
Texas	17,281,014
Utah	1,828,508
Vermont	489,901
Virginia	5,885,912
Washington	4,932,056
West Virginia	1,424,654
Wisconsin	4,280,361
Wyoming	397,465

I have certified these counts to the Federal Election Commission.

Dated: January 16, 2008.

Carlos M. Gutierrez,

Secretary, Department of Commerce.

[FR Doc. E8–1098 Filed 1–22–08; 8:45 am]

BILLING CODE 3510–07–P

DEPARTMENT OF COMMERCE

Bureau of the Census

Request for Nominations of Members To Serve on the Census Advisory Committee on the Hispanic Population

AGENCY: Bureau of the Census, Commerce.

ACTION: Notice of request for nominations.

SUMMARY: The Bureau of the Census (Census Bureau) is requesting nominations of individuals to the Census Advisory Committee on the Hispanic Population. The Census Bureau will consider nominations received in response to this Notice, as well as from other sources. The **SUPPLEMENTARY INFORMATION** section of this Notice provides Committee and membership criteria.

DATES: Please submit nominations by February 22, 2008.

ADDRESSES: Please submit nominations to Jeri Green, Chief, Census Advisory Committee Office, U.S. Census Bureau, Room 8H182, 4600 Silver Hill Road, Washington, DC 20233. Nominations also may be submitted via fax at (301) 763–8609, or by e-mail to *jeri.green@census.gov*.

FOR FURTHER INFORMATION CONTACT: Jeri Green, Chief, Census Advisory Committee Office, U.S. Census Bureau, Room 8H182, 4600 Silver Hill Road, Washington, DC 20233, telephone (301) 763–2070.

SUPPLEMENTARY INFORMATION: The Committee was established in accordance with the Federal Advisory Committee Act (Title 5, United States Code, Appendix 2) in 1995. The following provides information about the Committee, membership, and the nomination process.

Objectives and Duties

1. The Committee provides an organized and continuing channel of communication between Hispanic communities and the Census Bureau. Committee members identify useful strategies to reduce the differential undercount for the Hispanic population, and on ways data can be disseminated for maximum usefulness to the Hispanic population.

2. The Committee draws upon prior decennial planning efforts, research studies, test censuses, and other experiences to provide advice and recommendations for the 2010 Decennial Census Program.

3. The Committee functions solely as an advisory body under the Federal Advisory Committee Act.

4. The Committee reports to the Director of the Census Bureau.

Membership

1. Members are appointed by and serve at the discretion of the Secretary of Commerce. They are appointed to the nine-member Committee for a period of three years.

2. Members will be reevaluated at the conclusion of the three-year term, with the prospect of renewal, pending meeting attendance, administrative compliance, advisory committee needs, and the Secretary's concurrence. Committee members are selected in accordance with applicable Department of Commerce guidelines. The Committee aims to have a balanced representation, considering such factors as geography, gender, technical expertise, community involvement, and knowledge of census procedures and activities. The Committee aims to include members from diverse backgrounds, including state and local governments, academia, media, research, community-based organizations, and the private sector. No employee of the federal government can serve as a member of the Committee. Meeting attendance and active participation in the activities of the Advisory Committee are essential for sustained Committee membership, as well as submission of required annual financial disclosure statements.

Miscellaneous

1. Members of the Committee serve without compensation but receive reimbursement for Committee-related travel and lodging expenses.

2. The Committee meets at least once a year, budget permitting, but additional meetings may be held, as deemed necessary, by the Census Bureau Director or Designated Federal Official. All Committee meetings are open to the public in accordance with the Federal Advisory Committee Act.

Nomination Information

1. Nominations are requested as described above.

2. Nominees should have expertise and knowledge of the cultural patterns, issues, and/or data needs of the Hispanic community. Such knowledge and expertise are needed to provide advice and recommendations to the Census Bureau on how best to enumerate the Hispanic population and obtain complete and accurate data on this population. Individuals, groups, or organizations may submit nominations on behalf of a potential candidate. A summary of the candidate's qualifications (résumé or curriculum vitae) must be included along with the nomination letter. Nominees must have the ability to participate in Advisory Committee meetings and tasks. Besides Committee meetings, active participation may include Committee assignments and participation in conference calls and working groups.

3. The Department of Commerce is committed to equal opportunity in the workplace and seeks diverse Committee membership.

Dated: January 15, 2008.

Steve H. Murdock,

Director, Bureau of the Census.

[FR Doc. E8–1035 Filed 1–22–08; 8:45 am]

BILLING CODE 3510–07–P

DEPARTMENT OF COMMERCE

International Trade Administration

[A–580–816]

Certain Corrosion-Resistant Carbon Steel Flat Products From the Republic of Korea: Notice of Preliminary Results of Antidumping Duty New Shipper Review

AGENCY: Import Administration, International Trade Administration, U.S. Department of Commerce.

SUMMARY: In response to a request by the respondent, Haewon MSC Co., Ltd. (Haewon), the Department of Commerce (the Department) is conducting a new shipper review of the antidumping duty order on certain corrosion-resistant carbon steel flat products (CORE) from the Republic of Korea (Korea). This review covers one producer/exporter of the subject merchandise, Haewon. We preliminarily determine that Haewon did not make sales below normal value (NV). If these preliminary results are adopted in our final results, we will instruct U.S. Customs and Border Protection (CBP) to liquidate entries subject to this review regard without regard to antidumping duties.

DATES: *Effective Date:* January 23, 2008.

FOR FURTHER INFORMATION CONTACT: Victoria Cho or George McMahon, AD/CVD Operations, Office 3, Import Administration, International Trade Administration, U.S. Department of Commerce, 14th Street and Constitution Avenue, NW., Washington, DC 20230; telephone at (202) 482–5075, or (202) 482–1167, respectively.

SUPPLEMENTARY INFORMATION:

Background

On August 19, 1993, the Department published the antidumping order on CORE from Korea. *See Antidumping Duty Orders on Certain Cold-Rolled Carbon Steel Flat Products and Certain Corrosion-Resistant Carbon Steel Flat Products from Korea*, 58 FR 44159 (August 19, 1993) (*Order*). On February 28, 2007, during the semi-annual anniversary month of the *Order*, the Department received a timely request for a new shipper review of the *Order* from Haewon, in accordance with 19 CFR 351.214(c). On March 27, 2007, the Department published a notice of initiation of a new shipper review of the antidumping duty order on CORE from Korea covering the period August 1, 2006, through January 31, 2007. *See Corrosion-Resistant Carbon Steel Flat Products from Korea: Notice of Initiation of Antidumping Duty New Shipper Review for the period August 1, 2006, through January 31, 2007*, 72 FR 14260 (March 27, 2007).

On August 30, 2007, the Department published a notice extending the time period for issuing the preliminary results of the new shipper review from September 17, 2007, to January 15, 2008. *See Corrosion-Resistant Carbon Steel Flat Products From Korea: Extension of Time Limits for the Preliminary Results of Antidumping Duty New Shipper Review*, 72 FR 50099 (August 30, 2007).

On June 21, 2007, United States Steel Corporation [1] submitted an allegation that Haewon's home market sales were made at prices below the cost of production (COP). The Department analyzed the information referenced in petitioners' letter of June 21, 2007, and determined that the COP allegation was company-specific, employed a reasonable methodology, provided evidence of below-cost sales, and included models which are representative of the broader range of CORE sold by Haewon. Therefore, we determined that the petitioners' COP allegation provided a reasonable basis to initiate a new shipper COP investigation. *See* the Department's July 6, 2007, COP memorandum (COP memo). As a result, the Department issued a Section D questionnaire to Haewon on July 6, 2007. The Department subsequently issued three supplemental questionnaires regarding Sections A–C of the Department's initial questionnaire to Haewon on June 29, 2007, September 14, 2007, and October 17, 2007, respectively. The Department also issued two supplemental questionnaires regarding Section D of the Department's initial questionnaire on September 14, 2007, and October 17, 2007, respectively.

Period of Review

The period of review (POR) is August 1, 2006, through April 10, 2007.[2]

Date of Sale

It is the Department's practice normally to use the invoice date as the date of sale, although we may use a date other than the invoice date if we are satisfied that a different date better reflects the date on which the exporter or producer establishes the material terms of sale. *See* 19 CFR 351.401(i). We have preliminarily determined that there is no reason to depart from the Department's treatment of invoice date as the date of sale for Haewon.

Petitioners' Comments

On October 15, 2007, November 5, 2007, and December 10, 2007, the petitioners submitted a series of comments calling into question the bona fide nature of Haewon's U.S. sale and suggesting an affiliation between Haewon and the final customer of its U.S. sale. Haewon submitted comments rebutting petitioners' allegations. The Department issued an importer questionnaire to both Haewon and its U.S. importer on November 9, 2007. Based on the Department's analysis of the November 9, 2007, questionnaire response, and the information on the record, we determined that Haewon's U.S. sale is a bona fide transaction. For a discussion of these issues, *see* Memorandum from Victoria Cho, through James Terpstra to Melissa G. Skinner, regarding the bona fide nature of Haewon's sale to the United States, dated January 15, 2008.

Verification

The Department conducted a verification of Haewon's sales from November 5 through November 8, 2007, and a verification of Haewon's COP from November 9 through November 15, 2007. As provided in section 782(i)(3) of the Tariff Act of 1930, as amended (the Act), we verified the information provided by Haewon. We used standard verification procedures, including an examination of the relevant sales and financial records. Our verification results are detailed in the company-specific verification report placed in the case file in the Central Records Unit (CRU), Department of Commerce, HCHB Building, at Room 1117. *See* Haewon's Sales Verification Report and Haewon's Cost Verification Report, dated January 15, 2008.

Scope of the Order

This order covers flat-rolled carbon steel products, of rectangular shape, either clad, plated, or coated with corrosion-resistant metals such as zinc, aluminum, or zinc-, aluminum-, nickel- or iron-based alloys, whether or not corrugated or painted, varnished or coated with plastics or other nonmetallic substances in addition to the metallic coating, in coils (whether or not in successively superimposed layers) and of a width of 0.5 inch or greater, or in straight lengths which, if of a thickness less than 4.75 millimeters, are of a width of 0.5 inch or greater and which measures at least 10 times the

[1] Petitioners are the United States Steel Corporation (U.S. Steel) and Nucor Corporation (Nucor) (collectively, petitioners). Mittal Steel USA ISG, Inc. (Mittal Steel USA) is a domestic interested party.

[2] Note that the Department extended the POR until April 10, 2007 in order to include HMSC's U.S. sale, which entered on this particular date. *See* Department's letter to Haewon, dated May 23, 2007.

thickness or if of a thickness of 4.75 millimeters or more are of a width which exceeds 150 millimeters and measures at least twice the thickness, as currently classifiable in the Harmonized Tariff Schedule of the United States (HTSUS) under item numbers 7210.30.0030, 7210.30.0060, 7210.41.0000, 7210.49.0030, 7210.49.0090, 7210.49.0091, 7210.49.0095, 7210.61.0000, 7210.69.0000, 7210.70.6030, 7210.70.6060, 7210.70.6090, 7210.90.1000, 7210.90.6000, 7210.90.9000, 7212.20.0000, 7212.30.1030, 7212.30.1090, 7212.30.3000, 7212.30.5000, 7212.40.1000, 7212.40.5000, 7212.50.0000, 7212.60.0000, 7215.90.1000, 7215.90.3000, 7215.90.5000, 7217.20.1500, 7217.30.1530, 7217.30.1560, 7217.90.1000, 7217.90.5030, 7217.90.5060, and 7217.90.5090. Included in the order are flat-rolled products of non-rectangular cross-section where such cross-section is achieved subsequent to the rolling process including products which have been beveled or rounded at the edges (*i.e.*, products which have been ''worked after rolling''). Excluded from this order are flat-rolled steel products either plated or coated with tin, lead, chromium, chromium oxides, both tin and lead (''terne plate''), or both chromium and chromium oxides (''tin-free steel''), whether or not painted, varnished or coated with plastics or other nonmetallic substances in addition to the metallic coating. Also excluded from this order are clad products in straight lengths of 0.1875 inch or more in composite thickness and of a width which exceeds 150 millimeters and measures at least twice the thickness. Also excluded from this order are certain clad stainless flat-rolled products, which are three-layered corrosion-resistant carbon steel flat-rolled products less than 4.75 millimeters in composite thickness that consist of a carbon steel flat-rolled product clad on both sides with stainless steel in a 20% –60% –20% ratio.

These HTSUS item numbers are provided for convenience and customs purposes. The written descriptions remain dispositive.

Product Comparisons

In accordance with section 771(16) of the Act, we considered all CORE products produced by Haewon, covered by the scope of the order, and sold in the home market during the POR to be foreign like products for the purpose of determining appropriate product comparisons to CORE sold in the United States.

Where there were no sales in the ordinary course of trade of identical merchandise in the home market to compare to U.S. sales, we compared U.S. sales to the next most similar foreign like product on the basis of the characteristics listed in Appendix V of the Department's antidumping questionnaire. In making the product comparisons, we matched foreign like products based on the Appendix V physical characteristics reported by Haewon. Haewon reported both its home market and U.S. sales on an actual weight basis; therefore, no conversions of the weight field were necessary in making our fair-value comparisons.

Normal Value Comparisons

To determine whether sales of CORE by the respondent to the United States were made at less than NV, we compared the Export Price (EP) to the NV, as described in the ''Export Price'' and ''Normal Value'' sections of this notice. In accordance with section 777A(d)(2) of the Act, we calculated monthly weighted-average prices for NV and compared these to individual U.S. transactions.

Export Price

Haewon sold subject merchandise directly to the first unaffiliated purchaser in the United States prior to importation, and constructed export price methodology was not otherwise warranted based on the record facts of this review. Therefore, in accordance with section 772(a) of the Act, we applied the Department's EP methodology to Haewon's sales.

We calculated EP using, as the starting price, the packed, delivered price to the unaffiliated purchaser in the United States. In accordance with section 772(c)(2)(A) of the Act, we made the following deductions from the starting price (gross unit price), where appropriate: foreign inland freight from the mill to warehouse to port, foreign brokerage and handling, international freight, marine insurance, and other related charges.

Normal Value

A. Selection of Comparison Market

In order to determine whether there was a sufficient volume of sales in the home market to serve as a viable basis for calculating NV, we compared Haewon's volume of home-market sales of the foreign like product to its respective volume of the U.S. sale of the subject merchandise, in accordance with section 773(a)(1) of the Act. Haewon's aggregate volume of home-market sales of the foreign like product was greater than five percent of its respective aggregate volume of U.S. sales of the subject merchandise. Therefore, we determined that Haewon's home market was viable. We calculated NV as noted in the ''Calculation of NV Based on Comparison Market Prices'' and ''Calculation of NV Based on Constructed Value'' sections of this notice.

B. COP Analysis

As referenced in the background section, the Department conducted an analysis of U.S. Steel's allegation that Haewon's home market sales were made below the COP. We found that there were reasonable grounds to believe or suspect that Haewon's sales of the foreign like product in the home market were made at prices below their respective COP. Accordingly, pursuant to section 773(b)(1) of the Act, we initiated a new shipper COP investigation to determine whether Haewon's sales were made at prices below their COP. *See* COP Memo.

1. Calculation of COP

In accordance with section 773(b)(3) of the Act, we calculated the COP based on the sum of Haewon's costs of materials and fabrication employed in producing the foreign like product, plus selling, general, and administrative expenses (SG&A) and the cost of all expenses incidental to packing and preparing the foreign like product for shipment. We relied on the COP data submitted by Haewon.

2. Test of Comparison Market Sales Prices

We compared the weighted-average COP figures to home-market sales of the foreign like product as required by section 773(b) of the Act, in order to determine whether these sales had been made at prices below the COP. On a product-specific basis, we compared the COP to the home-market prices, less any applicable movement charges, rebates, discounts, packing, and direct selling expenses.

3. Results of the COP Test

Pursuant to section 773(b)(2)(C) of the Act, where less than 20 percent of a respondent's sales of a given product were at prices less than the COP, we did not disregard any below-cost sales of that product because we determined that the below-cost sales were not made in ''substantial quantities.'' Where 20 percent or more of a respondent's sales of a given product during the POR were

at prices less than the COP, we determined that sales of that model were made in ''substantial quantities'' for an extended period of time, in accordance with sections 773(b)(2)(B) and (C) of the Act, and were not at prices which would permit recovery of all costs within a reasonable period of time, in accordance with section 773(b)(2)(D) of the Act. In such cases, we disregarded the below-cost sales in accordance with section 773(b)(1) of the Act.

For purposes of these preliminary results, we disregarded below-cost sales of a given product and used the remaining sales as the basis for determining NV, in accordance with section 773(b)(1) of the Act.

C. Calculation of NV Based on Comparison Market Prices

For Haewon, for those comparison products for which there were sales at prices above the COP, we based NV on home-market prices. We were able to match the U.S. sale to contemporaneous sales, made in the ordinary course of trade, of a similar foreign like product, based on the product matching characteristics. For Haewon, we calculated NV based on sales from its warehouse to unaffiliated customers or Haewon Steel Tech (Haewon ST),[3] which were determined to be at arm's length (see discussion below regarding these sales). We made deductions, where appropriate, from the starting price for discounts, rebates, inland freight, and pre-sale warehouse expense. In accordance with section 773(a)(6) of the Act, we deducted home-market packing costs and added U.S. packing costs.

In addition to the aforementioned home market sales, Haewon acted as a toll producer of subject merchandise for another company in Korea. Haewon stated that under generally accepted accounting principles (GAAP) in Korea, these transactions are classified as sales of galvanizing services (*i.e.*, tolling transactions), and not as sales of merchandise. *See* Haewon's Section A Questionnaire Response dated May 17, 2007, at page 20, footnote 8. That is, the unaffiliated company supplied material inputs that Haewon processed into subject merchandise and shipped back to the company. However, Haewon reported that it included the quantity and value of these sales of galvanized coil in its reported home market sales figures. Because these are not sales of subject merchandise produced by Haewon and sold to an unaffiliated party, but rather are sales for which Haewon acted as a toll producer, we did not include these transactions in our margin calculations. The basis for the price of the resales is considered business proprietary information. *See* Haewon's Preliminary Results Calculation Memorandum, dated January 15, 2008.

Arm's-Length Sales

We included in our analysis Haewon's home-market sales to affiliated customers only where we determined that such sales were made at arm's-length prices, *i.e.*, at prices comparable to prices at which Haewon sold identical merchandise to its unaffiliated customers. Haewon's sales to affiliates constituted less than five percent of overall home-market sales. To test whether the sales to affiliates were made at arm's-length prices, we compared the starting prices of sales to affiliated and unaffiliated customers net of all movement charges, direct selling expenses, discounts, and packing. Where the price to that affiliated party was, on average, within a range of 98 to 102 percent of the price of the same or comparable merchandise sold to the unaffiliated parties, we determined that the sales made to the affiliated party were at arm's length. *See Antidumping Proceedings: Affiliated Party Sales in the Ordinary Course of Trade*, 67 FR 69186 (November 15, 2002).

Level of Trade

As set forth in section 773(a)(1)(B)(i) of the Act, to the extent practicable, the Department calculates NV based on sales at the same level of trade (LOT) as U.S. sales, either EP or CEP. When the Department is unable to find sale(s) in the comparison market at the same LOT as the U.S. sale(s), the Department may compare sales in the U.S. and foreign markets at different LOTs. The NV LOT is that of the starting-price of sales in the home market. To determine whether home-market sales are at a different LOT than U.S. sales, we examine stages in the marketing process and selling functions along the chain of distribution between the producer and the unaffiliated customer. If the comparison-market sales are at a different LOT and the differences affect price comparability, as manifested in a pattern of consistent price differences between the sales on which NV is based and comparison-market sales at the LOT of the export transaction, we make an LOT adjustment pursuant to section 773(a)(7)(A) of the Act.

We compared Haewon's selling functions in the home market to the selling functions for its U.S. sale. Haewon provided a selling functions chart for both markets in Exhibit A–5 of its May 17, 2007, section A response (section A response). Haewon reported its U.S. sale as an EP sale and it reported one LOT based on one channel of distribution. Similarly, we confirmed during verification that Haewon has one channel of distribution in the home market. As described in Haewon's section A response and at verification, the selling functions performed by Haewon in connection with its home market sales do not vary by customer category or distribution channel. Haewon did not claim an LOT adjustment because Haewon's home market sales were made at one LOT. Haewon's home market and U.S. sales were made through direct shipments from Haewon's production facility to the destination designated by the customer. Therefore, we find Haewon's home market LOT comparable to its LOT in the U.S. market.

Currency Conversion

For purposes of these preliminary results, we made currency conversions in accordance with section 773A(a) of the Act, based on the official exchange rates published by the Federal Reserve Bank.

Preliminary Results of Review

As a result of this review, we preliminarily determine that the following margin exists for the period August 1, 2006 through April 10, 2007:

Haewon	0.00

We will disclose the calculations used in our analysis to parties to this proceeding within five days of the publication date of this notice. *See* CFR 351.224(b). Interested parties are invited to comment on the preliminary results. Interested parties may submit case briefs within 30 days of the date of publication of this notice. Rebuttal briefs, limited to issues raised in the case briefs, may be filed no later than 37 days after the date of publication of this notice. Parties who submit arguments are requested to submit with each argument: (1) A statement of the issue, (2) a brief summary of the argument, and (3) a table of authorities. Further, parties submitting written comments should provide the Department with an additional copy of the public version of any such comments on a diskette. Any interested party may request a hearing within 30 days of publication of this notice. *See* 19 CFR 351.310(c). If requested, a hearing will be held 44

[3] Haewon sold a small amount of CORE to its affiliate, Haewon ST, a steel service center, in Korea. Haewon ST resold the CORE to end users in Korea.

days after the publication of this notice, or the first workday thereafter. The Department will publish a notice of the final results of this administrative review, which will include the results of its analysis of issues raised in any written comments or hearing, within 120 days from publication of this notice.

Assessment Rates

Upon completion of the new shipper review, the Department shall determine, and CBP shall assess, antidumping duties on all appropriate entries in accordance with 19 CFR 351.212. The Department intends to issue liquidation instructions directly to CBP 15 days after the date of publication of the final results of this new shipper review. The Department clarified its ''automatic assessment'' regulation on May 6, 2003. *See Antidumping and Countervailing Duty Proceedings: Assessment of Antidumping Duties,* 68 FR 23954 (May 6, 2003). This clarification will apply to entries of subject merchandise during the POR produced by the respondent for which it did not know its merchandise was destined for the United States. In such instances, we will instruct CBP to liquidate unreviewed entries at the all-others rate if there is no rate for the intermediate company(ies) involved in the transaction. For a full discussion of this clarification, *see Antidumping and Countervailing Duty Proceedings: Assessment of Antidumping Duties,* 68 FR 23954 (May 6, 2003).

Cash Deposit Requirements

The following cash deposit requirements will be effective upon publication of the final results of this new shipper review for all shipments of CORE from Korea entered, or withdrawn from warehouse, for consumption on or after the publication date, as provided for by section 751(a)(1) of the Act: (1) The cash deposit rate for subject merchandise manufactured and exported by Haewon will be the rate established in the final results of this new shipper review; except no cash deposit will be required if its weighted-average margin is *de minimis* (*i.e.*, less than 0.5 percent); (2) if the exporter is not a firm covered in this review, but was covered in a previous review or the original less-than-fair-value (LTFV) investigation, the cash deposit rate will continue to be the company-specific rate published for the most recent period; (3) if the exporter is not a firm covered in this review, a previous review, or the original LTFV investigation, but the manufacturer is, the cash deposit rate will be the rate established for the most recent period for the manufacturer of the merchandise; and (4) the cash deposit rate for all other manufacturers and/or exporters of this merchandise, shall be 17.70 percent, the all others rate established in the LTFV investigation. These requirements, when imposed, shall remain in effect until further notice.

Notification to Interested Parties

This notice also serves as a preliminary reminder to importers of their responsibility under 19 CFR 351.402(f) to file a certificate regarding the reimbursement of antidumping duties prior to liquidation of the relevant entries during this review period. Failure to comply with this requirement could result in the Secretary's presumption that reimbursement of antidumping duties occurred and the subsequent assessment of double antidumping duties. We are issuing and publishing this notice in accordance with sections 751(a)(1) and 777(i)(1) of the Act.

Dated: January 15, 2008.

David M. Spooner,

Assistant Secretary for Import Administration.

[FR Doc. E8–1105 Filed 1–22–08; 8:45 am]

BILLING CODE 3510–DS–P

DEPARTMENT OF COMMERCE

International Trade Administration

[A–570–909]

Certain Steel Nails From the People's Republic of China: Preliminary Determination of Sales at Less Than Fair Value and Partial Affirmative Determination of Critical Circumstances and Postponement of Final Determination

AGENCY: Import Administration, International Trade Administration, Department of Commerce.

EFFECTIVE DATE: January 23, 2008.

SUMMARY: We preliminarily determine that certain steel nails (''nails'') from the People's Republic of China (''PRC'') are being, or are likely to be, sold in the United States at less than fair value (''LTFV''), as provided in section 733 of the Tariff Act of 1930, as amended (''the Act''). The estimated margins of sales at LTFV are shown in the ''Preliminary Determination'' section of this notice. Interested parties are invited to comment on this preliminary determination. We will make our final determination within 135 days after the date of this preliminary determination.

FOR FURTHER INFORMATION CONTACT: Nicole Bankhead (respondent Paslode) or Matt Renkey (respondent Xingya Group), AD/CVD Operations, Office 9, Import Administration, International Trade Administration, U.S. Department of Commerce, 14th Street and Constitution Avenue, NW., Washington, DC 20230; telephone: (202) 482–9068 or 482–2312, respectively.

SUPPLEMENTARY INFORMATION:

Initiation

On May 29, 2007, the Department of Commerce (''the Department'') received petitions on imports of nails from the PRC and United Arab Emirates (''UAE'') filed in proper form by Mid Continent Nail Corporation, Davis Wire Corporation, Gerdau Ameristeel Corporation (Atlas Steel & Wire Division), Maze Nails (Division of W.H. Maze Company), Treasure Coast Fasteners, Inc., and the United Steel, Paper and Forestry, Rubber, Manufacturing, Energy, Allied Industrial and Service Workers International Union (collectively, ''Petitioners''). These investigations were initiated on July 9, 2007. *See Certain Steel Nails from the People's Republic of China and the United Arab Emirates: Initiation of Antidumping Duty Investigations,* 72 FR 38816 (July 16, 2007) (*''Initiation Notice''*).

On July 31, 2007, the United States International Trade Commission (''ITC'') issued its affirmative preliminary determination that there is a reasonable indication that an industry in the United States is materially injured or threatened with material injury by reason of imports from the PRC and UAE of nails. The ITC's determination was published in the **Federal Register** on August 6, 2007. *See Certain Steel Nails From China and the United Arab Emirates* (Investigation No. 731–TA–1114 and 1115) (Preliminary), Publication 3939 (August 2007) (*''ITC Preliminary Determination''*).

Scope Comments

In accordance with the preamble to our regulations, we set aside a period of time for parties to raise issues regarding product coverage and encouraged all parties to submit comments within 20 calendar days of publication of the *Initiation Notice.* (*See Antidumping Duties; Countervailing Duties; Final Rule,* 62 FR 27296, 27323 (May 19, 1997) and *Initiation Notice* 72 FR at 38817.)

In this investigation and the concurrent investigation of nails from the UAE, we received three scope exclusion requests during the period July 2007 through January 2008.

On July 30, 2007, Stanley Fastening Systems, LP (Stanley), an interested party in this proceeding, requested that

banded brads and finish nails imported with a ''nailer kit'' or ''combo kit'' [1] as a single package be excluded from this investigation as being outside the ''class or kind'' of merchandise. Stanley conducted a *Diversified Products* [2] analysis in support of its position claiming that banded products imported in the same package as a pneumatic nailer and sold as a ''nailer kit'' or ''combo kit'' are not within the class of kind of merchandise covered in the scope of the instant investigation. In addition, Stanley states that, to the best of its information and belief, none of the petitioning companies in this investigation manufacture banded brads or finish nails.

On August 9, 2007, Petitioners objected to this exclusion request, arguing that the scope of this proceeding is comprehensive and, while the scope contains specific exclusions, it does not exclude any nails based on their importation in combination with one or more other articles. Petitioners claimed that it is their intention that the scope of this proceeding include all certain steel nails exhibiting the physical characteristics identified in the written scope description, regardless of how imported. Furthermore, according to Petitioners, a *Diversified Products* analysis requires a determination that collated steel finish nails remain scope merchandise, whether imported on their own or with a nail gun. Finally, Petitioners cite several cases [3] in support of their contention that Department precedent supports their argument that these finish nails are merchandise covered by the scope of investigation. According to Petitioners, these rulings address fundamentally different types of kits or sets of merchandise, in which the subject merchandise at issue is subsumed with a set of goods whose essential character is defined as something other than the merchandise itself.

On August 15, 2007, Stanley responded to Petitioners' August 9, 2007, submission claiming that none of Petitioners' arguments supports a conclusion that banded products imported in nailer kits are within the subject class of kind of merchandise.

On December 12, 2007, Stanley revised its July 30, 2007, scope exclusion request arguing that its new request reflects a broader exclusion and is easily administered by U.S. Customs and Border Protection (''CBP'') because the description of the excluded brads and finish nails is framed solely in terms of their physical characteristics. On December 18, 2007, Petitioners filed a letter stating that they agree with Stanley's December 12, 2007, scope exclusion request.

Therefore, based on the scope exclusion request from Stanley, the fact that Petitioners are in agreement with this request, and that there appears to be no impediment to enforceability by CBP, [4] we preliminarily determine that the above described products are not subject to the scope of this investigation.[5]

In addition, Petitioners requested that the Department modify the scope of these investigations to exclude certain trademarked products in submissions dated October 5, 2007, October 12, 2007, October 24, 2007, and November 1, 2007.[6] However, we found that the proposed scope modification language, which would exclude only specifically registered trademarked products, would provide an improper scope for this investigation because its effect would be to exclude only products of the parties controlling those trademarks, while the same products without the specified trademarks would be included, creating a scope that is neither impartial nor reasonable. Furthermore, the trademark requirement may cause significant administrability problems for CBP should an antidumping duty order be issued. Therefore, on November 15, 2007, we determined it inappropriate to modify the scope of this investigation in accordance with Petitioners' request. *See* Memorandum to David M. Spooner, Assistant Secretary for Import Administration from Stephen J. Claeys, Deputy Assistant Secretary for Import Administration, AD/CVD Operations regarding ''Certain Steel Nails from the PRC) and the UAE: Scope Modification Request'' dated November 15, 2007.

On January 3, 2008, Hilti (China) Ltd. (''Hilti''), an interested party, requested that fasteners having a case hardness greater than or equal to 50 HRC, a carbon content greater than or equal to .5 percent, a round head, a secondary reduced-diameter raised head section, a centered shank, and a smooth symmetrical point, suitable for use in gas-actuated hand tools be excluded from the scope of this investigation.[7] On January 9, 2008, Petitioners filed a letter stating that they agree with Hilti's January 4, 2008, scope exclusion request. However, we received this request too late to consider for purposes of the preliminary determination, but will consider it for the final determination.

Respondent Selection

On July 10, 2007, the Department requested quantity and value (''Q&V'') information from a total of 121 companies [8] that Petitioners identified as potential producers or exporters of nails from the PRC. Also, on July 10, 2007, the Department sent a letter requesting Q&V information to the China Bureau of Fair Trade for Imports & Exports (''BOFT'') of the Ministry of Commerce (''MOFCOM'') requesting that BOFT transmit the letter to all companies who manufacture and export subject merchandise to the United States, or produce the subject merchandise for the companies who were engaged in exporting the subject merchandise to the United States during the POI.

Between July 25, 2007, and July 30, 2007, the Department received Q&V responses from 71 interested parties.[9]

[1] A ''nailer kit'' consists of a pneumatic nailer, a ''starter box'' of branded products and a carrying case. A ''combo kit'' consists of an air compressor, a pneumatic nailer, a ''starter box'' of banded products and related accessories, such as an air hose.

[2] Prior to being codified in the regulations, these factors were identified by the Court of International Trade in *Diversified Products Corp.* v. *United States,* 572 F. Supp. 883 (CIT 1983), and therefore, they are also referred to as the *''Diversified Products factors.''*

[3] *See, e.g.*, Memorandum from Wendy J. Frankel, Director, AD/CVD Operations, Office 8, to Barbara E. Tillman, Acting Deputy Assistant Secretary for Import Administration, *Final Scope Ruling—Antidumping Duty Order on Certain Cased Pencils from the People's Republic of China—Request by Fiskars Brands, Inc.* (June 3, 2005); Memorandum from Laurie Parkhill, Director, Office 8, AD/CVD Enforcement, To Jeffrey A. May, Deputy Assistant Secretary for Import Administration, *Final Scope Ruling—Antidumping Duty Order on Certain Cased Pencils from the People's Republic of China—Request by Target Corporation Regarding ''Hello Kitty Fashion Totes''* (September 29, 2004).

[4] *See* Memorandum to the File from Kate Johnson, Senior Case Analyst, to The File entitled ''Proposed Scope Exclusion,'' dated January 15, 2008.

[5] On January 8, 2008, Illinois Tool Works Inc. (''ITW''), an interested party, opposed the exclusion request filed by Stanley, arguing that it is the only U.S. producer of the product at issue. While the Department notes ITW's objection, it strives to craft a scope that both includes the specific products for which Petitioners have requested relief, and excludes those products which may fall within the general scope definition, but for which Petitioners do not seek relief.

[6] Each submission contained a revised version of the proposed scope modification.

[7] On January 8, 2008, Illinois Tool Works Inc. (''ITW''), an interested party, opposed the exclusion request filed by Hilti, arguing that it is the only U.S. producer of the product at issue.

[8] Petitioners identified 123 companies in the Petition. However, Qingdao D&L and Shanhgai Suntec were each listed twice with slightly different names, but the same address, thus, we treated each as a single company.

[9] For a complete list of all parties from which the Department requested Q&V information, *see* Memorandum to Stephen J. Claeys, Deputy Assistant Secretary for Import Administration, through James C. Doyle, Director, AD/CVD Operations, Office 9, from Nicole Bankhead, Sr. International Trade Analyst, AD/CVD Operations, Office 9: Selection of Respondents for the

Continued

The Department did not receive any type of communication from BOFT regarding the request for Q&V information. *See* Respondent Selection Memorandum at 2. On July 25, 2007, Illinois Tool Works Inc. and Paslode Fasteners (Shanghai) Co., Ltd. (collectively, ''Paslode'') submitted a letter requesting that it be selected as a mandatory respondent. On August 10, 2007, Petitioners submitted comments on the Q&V responses. On August 13, 2007, Paslode rebutted Petitioners' Q&V comments. On August 24, 2007, we rejected untimely Q&V responses from six companies. *See* August 24, 2007, letters from Alex Villanueva, Program Manager, Re: Quantity and Value Questionnaire Response for Certain Steel Nails from the People's Republic of China Investigation: Rejection of Submission. On September 11, 2007, the Department selected Paslode and Suzhou Xingya Nail Co., Ltd, Senco-Xingya Metal Products (Taicang) Co., Ltd., Yunfa International Resources In., Senco Products, Inc., and Omnifast Inc. (collectively ''Xingya Group'') as mandatory respondents in this investigation (''Mandatory Respondents''). *See* Respondent Selection Memorandum at 5.

Separate Rates Applications

Between August 6, 2007, and September 10, 2007, we received separate rate applications from 68 companies [10] (collectively, ''SR Applicants''), including the mandatory respondents: Paslode and Xingya Group [11]. On October 23, 2007, the Department rejected the separate rate application of Hilti because it was untimely. *See* Letter from Alex Villanueva, Program Manager, China/NME Group, Office 9: Rejection of Separate Rate Application, Including Quantity and Value Data, dated October 23, 2007. We issued deficiency questionnaires to Sinochem Tianjin Import and Export (''Sinochem'') on December 3, 2007, and Guangdong Foreign Trade Import & Export Corporation (''Guangong FT'') and Shouguang Meiqing (''Meiqing'') on December 27, 2007.[12] We received responses from Sinochem on December 5, 2007, Guangong FT on December 27, 2007, and Meiqing on January 3, 2008.

On December 27, 2007, we sent all SR Applicants a letter requesting that companies that had submitted a separate rate application with the supplier name treated as business proprietary information (''BPI'') resubmit the names of their suppliers as public information. We received responses between December 31, 2007, and January 11, 2008 from the following companies: China Silk Trading & Logistics Co., Ltd., The Stanley Works (Langfang) Fastening Systems Co., Ltd., Besco Machinery Industry (Zhejiang) Co., Ltd., Shanghai Tengyu Hardware Products Co., Ltd., Shanghai Cuvet Hardware Products Co., Ltd., Shanghai Chengkai Hardware Product. Co., Ltd., Shandong Oriental Cherry Hardware Import and Export Co., Ltd., Shandong Oriental Cherry Hardware Group Co., Ltd., Mingguang Abundant Hardware Products Co., Ltd., Shanghai Yueda Nails Industry Co., Ltd., Shanghai Jade Shuttle Hardware Tools Co., Ltd., Jining Huarong Hardware Products Co., Ltd., Shandong Dinglong Import & Export Co., Ltd., SDC International Australia Pty. Ltd., S-Mart (Tianjin) Technology Development Co., Ltd., Shanxi Hairui Trade Co., Ltd., PT Enterprise Inc., Shanxi Tianli Industries Co., Ltd., Tianjin Lianda Group Co., Ltd., Tianjin Xiantong Material & Trade Co., Ltd., Qingdao D&L, and Hebei Cangzhou New Century Foreign Trade Co., Ltd.[13]

Product Characteristics and Questionnaires

The Department requested comments from all interested parties on proposed product characteristics and model match criteria to be used in the designation of control numbers (''CONNUMs'') to be assigned to the subject merchandise in the *Initiation Notice.* On July 30, 2007, the Department received comments from Shanxi Yuci Broad Wire Products, Ltd. and its affiliated companies (''Shanxi Yuci''), Paslode, Stanley, and Petitioners. The Department also received rebuttal comments from Stanley, Shanxi Yuci, and Xingya Group on August 9, 2007.

On September 11, 2007, the Department issued its sections A, C, D, and E, questionnaire with product characteristics and model match criteria used in the designation of CONNUMs and assigned to the merchandise under consideration to Paslode and Xingya Group. Between October 2, 2007, and January 4, 2008, the Department received section A, C, and D questionnaire responses from Paslode and Xingya Group. The Department also issued supplemental questionnaires to both companies and received responses during this time period. Petitioners submitted deficiency comments on the section C and D questionnaire responses of Paslode and Xingya Group between November 13, 2007 and December 6, 2007. On December 19, 2007, the Department requested that Xingya Group clarify the quantity and value it reported in its supplemental section C response filed on December 18, 2007. Xingya Group responded to this letter on December 28, 2007.

Petitioners submitted additional deficiency comments and surrogate value rebuttals on January 2, 2008, pertaining to both Xingya Group and Paslode. On January 8, 2008, Paslode rebutted Petitioners' January 2, 2008, comments.

Surrogate Country

On September 19, 2007, the Department determined that India, Sri Lanka, Egypt, Indonesia, and Philippines are countries comparable to the PRC in terms of economic development. *See* Memorandum from Ron Lorentzen, Director, Office of Policy, to Alex Villanueva, Program Manager, China/NME Group, Office 9: Antidumping Duty Investigation of Certain Steel Nails (''nails'') from the People's Republic of China (PRC): Request for a List of Surrogate Countries, dated September 19, 2007 (''Surrogate Country List'').

On September 27, 2007, the Department requested comments on the surrogate country selection from the interested parties in this investigation. Petitioners submitted surrogate country comments on November 1, 2007 (''Petitioners' Surrogate Country Letter''). No other interested parties commented on the selection of a surrogate country. For a detailed discussion of the selection of the surrogate country, *see* ''Surrogate Country'' section below.

Antidumping Investigation of Certain Steel Nails from the People's Republic of China, dated September 11, 2007, (''Respondent Selection Memorandum'').

[10] The Department did not receive a separate rate application from Beijing Prouded Metal Group Co., Ltd. and Jiangsu SOHO International Group Corporation withdrew its separate rate request on September 7, 2007.

[11] This included Suzhou Xingya Nail Co., Ltd and Senco-Xingya Metal Products (Taicang) Co., Ltd.

[12] We also issued a deficiency questionnaire to Union Enterprise Co., Ltd. (''Union'') on December 7, 2007. However, upon further review we determined that Union is a wholly foreign-owned enterprise, and therefore the Department's deficiency questionnaire, which requested additional information on sections that wholly foreign-owned enterprises are not required to answer, was withdrawn on December 3, 2007. *See* Memorandum to: The File, From: Matthew Renkey, Senior Case Analyst, Re: Separate Rate Application for Union Enterprise (Kunshan) Co., Ltd., dated December 4, 2007.

[13] Hilti also submitted a letter stating that it was the supplier of the merchandise it exported to the United States. However, as noted above, we rejected Hilti's separate application as untimely. Additional companies also resubmitted the names of their suppliers, however, they previously reported as public and therefore we are not listing the companies that already submitted their supplier names publically.

Surrogate Value Comments

On December 3, 2007, Petitioners, Xingya Group, and Paslode, submitted comments on surrogate information with which to value the factors of production in this proceeding. On December 13, 2007, Petitioners, Xingya Group, and Paslode filed rebuttal comments on surrogate information with which to value the factors of production in this proceeding. Between December 20, 2007, and January 8, 2008, both Paslode and Xingya Group submitted additional surrogate value comments.

Critical Circumstances

On November 7, 2007, Petitioners alleged that there is a reasonable basis to believe or suspect critical circumstances exist with respect to the antidumping investigation of nails from the PRC. On November 19, 2007, the Department issued questionnaires requesting data for monthly exports to the United States from January 2005 through October 2007 from Paslode and Xingya Group, and received responses on December 3, 2007. We also received comments regarding Petitioners critical circumstance allegations from Shanxi Yuci, Beijing Daruixing, Jinhai Hardware, and Certified Products International Inc. (''CPI'') and Stanley on November 19, 2007, and November 29, 2007, respectively. Paslode and Xingya Group submitted their responses on December 3, 2007. For a detailed discussion, *see* the ''Critical Circumstances'' section below.

Targeted Dumping

On December 11, 2007, Petitioners filed an allegation of targeted dumping by Paslode based on a pattern of export prices for comparable merchandise that differ significantly among regions. On December 13, 2007, Petitioners revised certain aspects of their allegation. On December 14, 2007, Petitioners filed an allegation of targeted dumping by Xingya Group based on a pattern of export prices for comparable merchandise that differ significantly among customers. Petitioners also submitted the programming code they used in their targeted dumping allegations on December 14, 2007. On December 20, 2007, Paslode submitted comments on Petitioners' targeted dumping allegation. On December 26, 2007, Xingya Group submitted comments on Petitioners' targeted dumping allegation. On December 31, 2007, Petitioners filed rebuttal comments to Paslode's targeted dumping comments. On January 3, 2008, Petitioners filed rebuttal comments to Xingya Group's December 26, 2007, comments. On January 9, 2008, Paslode submitted additional targeted dumping comments, which Petitioners responded to on January 10, 2008. Petitioners and Paslode submitted additional targeted dumping comments on January 14, 2008. See ''Targeted Dumping'' section below for further discussion.

Postponement of Preliminary Determination

On November 1, 2007, Petitioners made a timely request, pursuant to 19 CFR 351.205(e), for a 50-day postponement of the preliminary determination in the instant investigation, pursuant to section 733(c)(1)(A) of the Act. The Department extended the preliminary determination on November 5, 2007. *See Certain Steel Nails from the People's Republic of China and the United Arab Emirates: Postponement of Preliminary Determinations of Antidumping Duty Investigations,* 72 FR 63558 (November 9, 2007).

Postponement of Final Determination

On January 3, 2008, Xingya Group requested that, in the event of an affirmative preliminary determination in this investigation, the Department: (1) Postpone its final determination by 60 days in accordance with 19 CFR 351.210(2)(ii) and 735(a)(2)(A) of the Act; and (2) extend the application of the provisional measures prescribed under 19 CFR 351.210(e)(2) from a 4-month period to a 6-month period.

Period of Investigation

The period of investigation (''POI'') is October 1, 2006, through March 31, 2007. This period corresponds to the two most recent fiscal quarters prior to the month of the filing of the petition, May 2007. *See* 19 CFR 351.204(b)(1).

Scope of Investigation

The merchandise covered by this investigation includes certain steel nails having a shaft length up to 12 inches. Certain steel nails include, but are not limited to, nails made of round wire and nails that are cut. Certain steel nails may be of one piece construction or constructed of two or more pieces. Certain steel nails may be produced from any type of steel, and have a variety of finishes, heads, shanks, point types, shaft lengths and shaft diameters. Finishes include, but are not limited to, coating in vinyl, zinc (galvanized, whether by electroplating or hot-dipping one or more times), phosphate cement, and paint. Head styles include, but are not limited to, flat, projection, cupped, oval, brad, headless, double, countersunk, and sinker. Shank styles include, but are not limited to, smooth, barbed, screw threaded, ring shank and fluted shank styles. Screw-threaded nails subject to this proceeding are driven using direct force and not by turning the fastener using a tool that engages with the head. Point styles include, but are not limited to, diamond, blunt, needle, chisel and no point. Finished nails may be sold in bulk, or they may be collated into strips or coils using materials such as plastic, paper, or wire. Certain steel nails subject to this proceeding are currently classified under the Harmonized Tariff Schedule of the United States (HTSUS) subheadings 7317.00.55, 7317.00.65 and 7317.00.75.

Excluded from the scope of this proceeding are roofing nails of all lengths and diameter, whether collated or in bulk, and whether or not galvanized. Steel roofing nails are specifically enumerated and identified in ASTM Standard F 1667 (2005 revision) as Type I, Style 20 nails. Also excluded from the scope of this proceeding are corrugated nails. A corrugated nail is made of a small strip of corrugated steel with sharp points on one side. Also excluded from the scope of this proceeding are fasteners suitable for use in powder-actuated hand tools, not threaded and threaded, which are currently classified under HTSUS 7317.00.20 and 7317.00.30. Also excluded from the scope of this proceeding are thumb tacks, which are currently classified under HTSUS 7317.00.10.00. Also excluded from the scope of this proceeding are certain brads and finish nails that are equal to or less than 0.0720 inches in shank diameter, round or rectangular in cross section, between 0.375 inches and 2.5 inches in length, and that are collated with adhesive or polyester film tape backed with a heat seal adhesive.[14]

While the HTSUS subheadings are provided for convenience and customs purposes, the written description of the scope of these investigations is dispositive.

Non-Market-Economy Country

For purposes of initiation, Petitioners submitted LTFV analyses for the PRC as a non-market economy (''NME''). *See Initiation Notice,* 72 FR at 38820. The Department considers the PRC to be a NME country. See, *e.g., Preliminary Determination of Sales at Less Than Fair Value and Postponement of Final Determination: Coated Free Sheet Paper*

[14] *See* ''Scope Comments'' section below for further discussion.

from the People's Republic of China, 72 FR 30758, 30760 (June 4, 2007), unchanged in *Final Determination of Sales at Less Than Fair Value: Coated Free Sheet Paper from the People's Republic of China*, 72 FR 60632 (October 25, 2007). In accordance with section 771(18)(C)(i) of the Act, any determination that a foreign country is an NME country shall remain in effect until revoked by the administering authority. No party has challenged the designation of the PRC as an NME country in this investigation. Therefore, we continue to treat the PRC as an NME country for purposes of this preliminary determination.

Surrogate Country

When the Department is investigating imports from an NME, section 773(c)(1) of the Act directs it to base normal value, in most circumstances, on the NME producer's factors of production (''FOP'') valued in a surrogate market-economy country or countries considered to be appropriate by the Department. In accordance with section 773(c)(4) of the Act, in valuing the factors of production, the Department shall utilize, to the extent possible, the prices or costs of factors of production in one or more market-economy countries that are at a level of economic development comparable to that of the NME country and are significant producers of comparable merchandise. The sources of the surrogate values we have used in this investigation are discussed under the normal value section below.

The Department's practice is explained in *Policy Bulletin 04.1,*[15] which states that ''Per capita GNI[16] is the primary basis for determining economic comparability.'' The Department considers the five countries identified in its Surrogate Country List as ''equally comparable in terms of economic development.'' *Id.* Thus, we find that India, Sri Lanka, Egypt, Indonesia, and Philippines are all at an economic level of development equally comparable to that of the PRC.

Second, *Policy Bulletin 04.1* provides some guidance on identifying comparable merchandise and selecting a producer of comparable merchandise. Based on the data provided by Petitioners, we find that India is a producer of comparable merchandise. *See* Petitioners' Surrogate Country Letter at 6. Petitioners provided a list of Indian steel nail companies that produce nails of varying complexity, *i.e.*, collated nails, etc. *Id.* Additionally, the Department obtained worldwide export data for nails. Because the Department was unable to find production data, we are relying on export data as a substitute for overall production data in this case. Of the five countries listed in the Surrogate Country List, only two countries, India and Indonesia, are exporters of nails. *Id.* Consequently, at this time, the Philippines, Sri Lanka, and Egypt are not being considered as appropriate surrogate countries for the PRC because they are not exporters of nails. Moreover, India is a significant producer of comparable merchandise. Specifically, during 2006 United States imports of comparable merchandise from India were 560,043 pounds versus 80,935 pounds from Indonesia.

As noted above, the Department only received surrogate country comments from Petitioners. The Department is preliminarily selecting India as the surrogate country on the basis that: (1) It is at a similar level of economic development pursuant to 773(c)(4) of the Act; (2) it is a significant producer of comparable merchandise; and (3) we have reliable data from India that we can use to value the factors of production. Thus, we have calculated normal value using Indian prices when available and appropriate to value Paslode's and Xingya Group's factors of production. *See* Memorandum to the File from Matthew Renkey, through Alex Villanueva, Program Manager, AD/CVD Operations, Office 9, and James C. Doyle, Director, AD/CVD Operations, Office 9: Certain Steel Nails from the People's Republic of China: Surrogate Values for the Preliminary Determination, dated January 15, 2008 (''Surrogate Value Memorandum'').

In accordance with 19 CFR 351.301(c)(3)(i), for the final determination in an antidumping investigation, interested parties may submit publicly available information to value the factors of production within 40 days after the date of publication of the preliminary determination.[17]

Affiliations

We preliminarily find that the Xingya Group, comprised of Suzhou Xingya Nail Co., Ltd., Senco-Xingya Metal Products (Taicang) Co., Ltd., Wuxi Chengye Metal Products Co., Ltd., and Hong Kong Yu Xi Limited, to be affiliated parties within the meaning of section 771(33) of the Act, due to common ownership, shared management, and familial connections. *See* Xingya Group August 20, 2007, supplemental Q&V response at 2–3 and Exhibit 1 (''Xingya Group Supplemental Q&V Response''), and its November 13, 2007, supplemental Section A response at 7–8 and Exhibit 8 (''Xingya Group November Response''). Furthermore, we find that they should be considered as a single entity for purposes of this investigation. *See generally* 19 CFR 401(f). In addition to being affiliated, we find that a significant potential for manipulation of price exists. *See* 19 CFR 401(f)(2). Specifically, there exists a level of common ownership, shared management, and an intertwining of business operations. *See* Xingya Group Supplemental Q&V Response at 2–3 and Exhibit 1 and Xingya Group November Response at 7–8 and Exhibit 8.

Additionally, based on the evidence on the record in this investigation and presented in Paslode's questionnaire responses, we preliminarily find that Paslode Shanghai is affiliated with its U.S. customer ITW pursuant to section 771(33)(E) of the Act because of cross-ownership. *See* Paslode September 7, 2007, Separate Rate Application at Attachment 3. We note that no party has to date objected to these affiliation and collapsing decisions.

Separate Rates

Additionally, in the *Initiation Notice,* the Department notified parties of the recent application process by which exporters and producers may obtain separate-rate status in NME investigations. *See Initiation Notice,* 72 FR at 38821. The process requires exporters and producers to submit a separate-rate status application. *See also Policy Bulletin 05.1: Separate-Rates Practice and Application of Combination Rates in Antidumping Investigations involving Non-Market Economy Countries,* (April 5, 2005), (''*Policy Bulletin 05.1*'') available at

[15] *See Policy Bulletin 04.1: Non-Market Economy Surrogate Country Selection Process,* (March 1, 2004), (''Policy Bulletin 04.1'') available at *http://ia.ita.doc.gov.*

[16] GNI stands for gross national income, which comprises GDP plus net receipts of primary income (compensation of employees and property income) from nonresident sources. *See, e.g., http://www.finfacts.com/biz10/globalworldincomepercapita.htm.*

[17] In accordance with 19 CFR 351.301(c)(1), for the final determination of this investigation, interested parties may submit factual information to rebut, clarify, or correct factual information submitted by an interested party less than ten days before, on, or after, the applicable deadline for submission of such factual information. However, the Department notes that 19 CFR 351.301(c)(1) permits new information only insofar as it rebuts, clarifies, or corrects information recently placed on the record. The Department generally cannot accept the submission of additional, previously absent-from-the-record alternative surrogate value information pursuant to 19 CFR 351.301(c)(1). *See Glycine from the People's Republic of China: Final Results of Antidumping Duty Administrative Review and Final Rescission, in Part,* 72 FR 58809 (October 17, 2007) and accompanying Issues and Decision Memorandum at Comment 2.

http://ia.ita.doc.gov.[18] However, the standard for eligibility for a separate rate (which is whether a firm can demonstrate an absence of both *de jure* and *de facto* governmental control over its export activities) has not changed.

In proceedings involving NME countries, the Department has a rebuttable presumption that all companies within the country are subject to government control and thus should be assessed a single antidumping duty rate. It is the Department's policy to assign all exporters of merchandise subject to investigation in an NME country this single rate unless an exporter can demonstrate that it is sufficiently independent so as to be entitled to a separate rate. As discussed fully below, Paslode and Xingya Group, and all but one of the SR Applicants have provided company-specific information to demonstrate that they operate independently of *de jure* and *de facto* government control, and therefore satisfy the standards for the assignment of a separate rate.[19]

We have considered whether each PRC company that submitted a complete application is eligible for a separate rate. The Department's separate-rate test is not concerned, in general, with macroeconomic/border-type controls, *e.g.*, export licenses, quotas, and minimum export prices, particularly if these controls are imposed to prevent dumping. *See Notice of Final Determination of Sales at Less Than Fair Value: Certain Preserved Mushrooms from the People's Republic of China,* 63 FR 72255, 72256 (December 31, 1998). The test focuses, rather, on controls over the investment, pricing, and output decision-making process at the individual firm level. *See Certain Cut-to-Length Carbon Steel Plate from Ukraine: Final Determination of Sales at Less than Fair Value,* 62 FR 61754, 61758 (November 19, 1997), and *Tapered Roller Bearings and Parts Thereof, Finished and Unfinished, from the People's Republic of China: Final Results of Antidumping Duty Administrative Review,* 62 FR 61276, 61279 (November 17, 1997).

To establish whether a firm is sufficiently independent from government control of its export activities to be entitled to a separate rate, the Department analyzes each entity exporting the subject merchandise under a test arising from the *Notice of Final Determination of Sales at Less Than Fair Value: Sparklers from the People's Republic of China,* 56 FR 20588 (May 6, 1991) (''*Sparklers*''), as further developed in *Notice of Final Determination of Sales at Less Than Fair Value: Silicon Carbide from the People's Republic of China,* 59 FR 22585 (May 2, 1994) (''*Silicon Carbide*''). In accordance with the separate-rates criteria, the Department assigns separate rates in NME cases only if respondents can demonstrate the absence of both *de jure* and *de facto* governmental control over export activities. Additionally, if the Department determines that a company is wholly foreign-owned or located in a market economy, then a separate rate analysis is not necessary to determine whether it is independent from government control.

Wholly Foreign-Owned

In its separate-rate application, Paslode reported that it is wholly foreign-owned. Paslode explained that it is ultimately owned by ITW, which is located in the United States. Additionally, 23 separate rate companies reported that they are wholly owned by individuals or companies located in a market economy in their separate-rate applications (collectively ''Foreign-owned SR Applicants''). *See* ''PRELIMINARY DETERMINATION'' section below for companies marked with a ''^'' designating companies as wholly foreign-owned. Therefore, because there is no PRC ownership of Paslode and the above-mentioned separate rate companies, *i.e.* they are wholly foreign-owned, and we have no evidence indicating that they are under the control of the PRC, a separate rates analysis is not necessary to determine whether these companies are independent from government control. *See Notice of Final Determination of Sales at Less Than Fair Value: Creatine Monohydrate from the People's Republic of China,* 64 FR 71104–05 (December 20, 1999) (where the respondent was wholly foreign-owned, and thus, qualified for a separate rate). Accordingly, we have preliminarily granted a separate rate to Paslode and the Foreign-owned SR Applicants.

Located in a Market Economy

Four of the responding exporters in this investigation are located outside the PRC (collectively ''Foreign SR Applicants''). *See* ''PRELIMINARY DETERMINATION'' section below for companies marked with a ''+'' designating companies as located in a market economy. Further, there is no PRC ownership in any of these companies. Therefore, we determine that no separate rates analysis is required for these exporters because they are beyond the jurisdiction of the PRC government. (*See, e.g., Notice of Final Determination of Sales at Less Than Fair Value: Bicycles From the People's Republic of China,* 61 FR 19026, 19027 (April 30, 1996) citing *Final Determination of Sales at Less Than Fair Value: Disposable Pocket Lighters from the People's Republic of China,* 60 FR 22359, 22361 (May 5, 1995)).

Joint Ventures Between Chinese and Foreign Companies or Wholly Chinese-Owned Companies

Certain companies stated that they are either joint ventures between Chinese and foreign companies or are wholly Chinese-owned companies (collectively ''PRC SR Applicants''). *See* ''PRELIMINARY DETERMINATION'' section below for companies marked with a ''*'' designating companies as joint ventures between Chinese and foreign companies or wholly Chinese-owned companies. Therefore, the Department must analyze whether these respondents can demonstrate the absence of both *de jure* and *de facto* governmental control over export activities.

1. Absence of De Jure Control

The Department considers the following *de jure* criteria in determining whether an individual company may be granted a separate rate: (1) An absence of restrictive stipulations associated with an individual exporter's business and export licenses; (2) any legislative enactments decentralizing control of companies; and (3) other formal measures by the government decentralizing control of companies. *See Sparklers,* 56 FR at 20589.

The evidence provided by Xingya Group and the PRC SR Recipients supports a preliminary finding of *de jure* absence of governmental control based on the following: (1) an absence of restrictive stipulations associated with the individual exporters' business

[18] The *Policy Bulletin 05.1,* states: ''{w}hile continuing the practice of assigning separate rates only to exporters, all separate rates that the Department will now assign in its NME investigations will be specific to those producers that supplied the exporter during the period of investigation. Note, however, that one rate is calculated for the exporter and all of the producers which supplied subject merchandise to it during the period of investigation. This practice applied both to mandatory respondents receiving an individually calculated separate rate as well as the pool of non-investigated firms receiving the weighted-average of the individually calculated rates. This practice is referred to as the application of ''combination rates'' because such rates apply to specific combinations of exporters and one or more producers. The cash-deposit rate assigned to an exporter will apply only to merchandise both exported by the firm in question and produced by a firm that supplied the exporter during the period of investigation.'' *See Policy Bulletin 05.1* at 6.

[19] All separate rate applicants receiving a separate rate are hereby referred to collectively as the ''SR Recipients.''

and export licenses; (2) there are applicable legislative enactments decentralizing control of the companies; and (3) and there are formal measures by the government decentralizing control of companies. *See, e.g.*, Suzhou Xingya Nail Co., Ltd. September 10, 2007, Separate Rate Application (''Suzhou Xingya SRA'').

2. Absence of De Facto Control

Typically the Department considers four factors in evaluating whether each respondent is subject to *de facto* governmental control of its export functions: (1) Whether the export prices are set by or are subject to the approval of a governmental agency; (2) whether the respondent has authority to negotiate and sign contracts and other agreements; (3) whether the respondent has autonomy from the government in making decisions regarding the selection of management; and (4) whether the respondent retains the proceeds of its export sales and makes independent decisions regarding disposition of profits or financing of losses. *See Silicon Carbide,* 59 FR at 22586–87; *see also Notice of Final Determination of Sales at Less Than Fair Value: Furfuryl Alcohol From the People's Republic of China,* 60 FR 22544, 22545 (May 8, 1995). The Department has determined that an analysis of *de facto* control is critical in determining whether respondents are, in fact, subject to a degree of governmental control which would preclude the Department from assigning separate rates.

We determine that, for Xingya Group and the PRC SR Recipients, the evidence on the record supports a preliminary finding of *de facto* absence of governmental control based on record statements and supporting documentation showing the following: (1) Each exporter sets its own export prices independent of the government and without the approval of a government authority; (2) each exporter retains the proceeds from its sales and makes independent decisions regarding disposition of profits or financing of losses; (3) each exporter has the authority to negotiate and sign contracts and other agreements; and (4) each exporter has autonomy from the government regarding the selection of management. *See* Suzhou Xingya SRA.

Therefore, the evidence placed on the record of this investigation by Xingya Group [20] and the PRC SR Recipients demonstrate an absence of *de jure* and *de facto* government control with respect to each of the exporters' exports of the merchandise under investigation, in accordance with the criteria identified in *Sparklers* and *Silicon Carbide.* As a result, for the purposes of this preliminary determination, we have granted a separate company-specific rate to Xingya Group. Additionally, we have granted all SR Applicants, except as identified below, a weighted-average margin, for the purposes of this preliminary determination. Finally, and as discussed previously, we granted Paslode a separate company-specific rate because it is wholly foreign-owned.

Companies Not Receiving a Separate Rate

The Department is not granting a separate rate to Tianjin Certified Products Inc. (''TCPI'') because it was not created nor did it export during the POI. Therefore, in accordance with Department practice, TCPI is not eligible for a separate rate.

The PRC-Wide Entity [21]

The Department has data that indicates there were more exporters of nails from the PRC than those indicated in the response to our request for Q&V information during the POI. *See Respondent Selection Memorandum.* We issued our request for Q&V information to 121 potential Chinese exporters of the subject merchandise, in addition to BOFT and MOFCOM.[22] We received 72 [23] Q&V responses filed by the July 30, 2007, deadline. *See Respondent Selection Memorandum* at 2. We did not receive Q&V responses from 71 of the companies to which we sent our request for Q&V information. However, out of the 71 companies that did not submit Q&V responses, 11 companies did not receive our Q&V questionnaire. *See* Memorandum to the File, from Irene Gorelik, senior trade analyst, Re: Companies Unresponsive to the Department's Request for Quantity and Value data for the Antidumping Investigation of Certain Steel Nails from the People's Republic of China, dated January 15, 2008. Therefore, we are not including the companies that did not receive our Q&V questionnaires in our analysis. Furthermore, we note that there was no additional information on the record to allow for the Department to contact these entities.[24]

Based upon our knowledge of the volume of imports of subject merchandise from the PRC, the companies which responded to the Q&V questionnaire, the SR Recipients, Paslode, and Xingya Group, do not account for all imports into the United States. Although all exporters were given an opportunity to provide Q&V information, not all exporters provided a response to the Department's Q&V letter. Further, the Government of the PRC did not respond to the Department's questionnaire. Therefore, the Department determines preliminarily that there were PRC exporters of the subject merchandise during the POI that received the Department's Q&V request and did not respond to the Department's request for information. We have treated these PRC exporters as part of the PRC-wide entity because they did not qualify for a separate rate.

Section 776(a)(2) of the Act provides that, if an interested party (A) withholds information that has been requested by the Department, (B) fails to provide such information in a timely manner or in the form or manner requested, subject to subsections 782(c)(1) and (e) of the Act, (C) significantly impedes a proceeding under the antidumping statute, or (D) provides such information but the information cannot be verified, the Department shall, subject to subsection 782(d) of the Act, use facts otherwise available in reaching the applicable determination.

Information on the record of this investigation indicates that the PRC-wide entity was non-responsive. Certain companies did not respond to our request for Q&V information and did not respond to the Department's questionnaire, and, as previously noted, the Government of the PRC received our questionnaire and did not respond. *See* Respondent Selection Memorandum at Attachment II for a full list of non-responsive companies. As a result, pursuant to section 776(a)(2)(A) of the Act, we find that the use of facts

[20] Some companies within Xingya Group submitted a timely separate application, however, because these companies are considered part of Xingya Group single entity we did not consider their separate rate status on an individual basis.

[21] This includes the following six companies whose Q&V the Department rejected: Tianjin Master Fastener Co., Ltd., Wuxi Baolin Nail Enterprises, Zhejiang Jinhua Friendship Industry Co., Ltd., Tianjin Ever Win Metal Products Co., Ltd., Tianjin Jetcom Manufacturing Co., Ltd., Shanghai Shengxiang Hardware Industrial Co., Ltd. and Hilti, whose untimely separate rate application was rejected. It also includes the two companies that the Department received Q&V responses for but did not receive separate rate applications.

[22] For a list of companies to which the Department sent its request for Q&V information, *see* Respondent Selection Memorandum at Attachment 1.

[23] The Department inadvertently included Huanghua Jinhai Hardware Products Co., Ltd (''Jinhai'') as a company that did not respond to the Department's Q&V response in the Respondent Selection Memo; Jinhai submitted a timely Q&V response.

[24] Two companies also stated that they did not have shipments of subject merchandise during the POI and thus are preliminarily not subject to any further analysis in this investigation.

available is appropriate to determine the PRC-wide rate. *See also* Statement of Administration Action accompanying the Uruguay Round Agreements Act, H.R. Rep. No. 103–316 Vol. I at 869–70 (1994) *reprinted in* 1994 U.S.C.C.A.N. 4040, 4198–99 (*''SAA''*); *Preliminary Determination of Sales at Less Than Fair Value, Affirmative Preliminary Determination of Critical Circumstances and Postponement of Final Determination: Certain Frozen Fish Fillets from the Socialist Republic of Vietnam,* 68 FR 4986, 4991 (January 31, 2003), unchanged in *Final Determination of Sales at Less Than Fair Value and Affirmative Critical Circumstances: Certain Frozen Fish Fillets from the Socialist Republic of Vietnam,* 68 FR 37116 (June 23, 2003).

Section 776(b) of the Act provides that, in selecting from among the facts otherwise available, the Department may employ an adverse inference if an interested party fails to cooperate by not acting to the best of its ability to comply with requests for information. *see also SAA* at 870, 19 U.S.C.C.A.N. at 4199; *Final Determination of Sales at Less Than Fair Value: Certain Cold-Rolled Flat-Rolled Carbon-Quality Steel Products from the Russian Federation,* 65 FR 5510, 5518 (February 4, 2000). We find that, because the PRC-wide entity did not respond to our request for information, it has failed to cooperate to the best of its ability. Therefore, the Department preliminarily finds that, in selecting from among the facts available, an adverse inference is appropriate.

Further, section 776(b) of the Act authorizes the Department to use as adverse facts available (''AFA'') information derived from the petition, the final determination from the LTFV investigation, a previous administrative review, or any other information placed on the record. In selecting a rate for adverse facts available, the Department selects a rate that is sufficiently adverse ''as to effectuate the purpose of the facts available rule to induce respondents to provide the Department with complete and accurate information in a timely manner.'' *See Final Determination of Sales at Less Than Fair Value: Static Random Access Memory Semiconductors from Taiwan,* 63 FR 8909, 8932 (February 23, 1998). It is the Department's practice to select, as AFA, the higher of the (a) highest margin alleged in the petition, or (b) the highest calculated rate of any respondent in the investigation. *See Final Determination of Sales at Less Than Fair Value: Certain Cold-Rolled Carbon Quality Steel Products from the People's Republic of China,* 65 FR 34660 (May 21, 2000) and accompanying Issues and Decision Memorandum, at ''Facts Available.'' In the instant investigation, as AFA, we have assigned to the PRC-wide entity a margin based on information in the petition, because the margin derived from the petition is higher than the calculated margins for the selected respondents. In this case, we have applied the petition rate of 118.04 percent.

Section 776(c) of the Act requires that, when the Department relies on secondary information rather than on information obtained in the course of an investigation as facts available, it must, to the extent practicable, corroborate that information from independent sources reasonably at its disposal.[25] It is the Department's practice also to consider independent sources such as published price lists, official import statistics and customs data, and information obtained from interested parties during the particular investigation. *See SAA* at 870, 19 U.S.C.C.A.N. at 4199.

To ''corroborate'' means that the Department will satisfy itself that the secondary information to be used has probative value. *See SAA* at 870, 19 U.S.C.C.A.N. at 4199. As noted in *Tapered Roller Bearings and Parts Thereof, Finished and Unfinished, from Japan, and Tapered Roller Bearings, Four Inches or Less in Outside Diameter, and Components Thereof, from Japan; Preliminary Results of Antidumping Duty Administrative Reviews and Partial Termination of Administrative Reviews,* 61 FR 57391, 57392 (November 6, 1996), unchanged in *Final Results of Antidumping Duty Administrative Reviews and Termination in Part: Tapered Roller Bearings and Parts Thereof, Finished and Unfinished, From Japan, and Tapered Roller Bearings, Four Inches or Less in Outside Diameter, and Components Thereof, From Japan,* 62 FR 11825 (March 13, 2005), to corroborate secondary information, the Department will, to the extent practicable, examine the reliability and relevance of the information used.

Petitioners' methodology for calculating the export price and normal value in the petition is discussed in the initiation notice. *See Initiation Notice,* 72 FR at 38820. To corroborate the AFA margin selected, we compared the U.S. price and normal values from the petition to the U.S. price and normal values for the Xingya Group. *See* Memorandum to the File from Matthew Renkey, Senior Case Analyst: Program Analysis for the Preliminary Determination of Antidumping Duty Investigation of Certain Steel nails from the People's Republic of China: Xingya Group, dated January 15, 2008 (''Xingya Group Analysis Memorandum''). For the reasons discussed therein, we find that the rate of 118.04 percent is corroborated within the meaning of section 776(c) of the Act. Consequently, we are applying 118.04 percent as the single antidumping rate to the PRC-wide entity. The PRC-wide rate applies to all entries of the merchandise under investigation except for entries from Paslode, Xingya Group, and the SR Recipients.

Margin for the Separate Rate Applicants

The Department received timely and complete separate rates applications from the Separate Rates Applicants, who are all exporters of nails from the PRC, which were not selected as mandatory respondents in this investigation. Through the evidence in their applications, these companies have demonstrated their eligibility for a separate rate, as discussed above. Consistent with the Department's practice, as the separate rate, we have established a weighted-average margin for the Separate Rates Applicants based on the rates we calculated for Paslode and Xingya Group. Companies receiving this rate are identified by name in the ''Suspension of Liquidation'' section of this notice.

Date of Sale

Section 351.401(i) of the Department's regulations states that, ''{i}n identifying the date of sale of the subject merchandise or foreign like product, the Secretary normally will use the date of invoice, as recorded in the exporter or producer's records kept in the ordinary course of business.'' However, the Secretary may use a date other than the date of invoice if the Secretary is satisfied that a different date better reflects the date on which the exporter or producer establishes the material terms of sale. *See* 19 CFR 351.401(i); *see also Allied Tube and Conduit Corp.* v. *United States,* 132 F. Supp. 2d 1087, 1090–1093 (CIT 2001) (''*Allied Tube*''). The date of sale is generally the date on which the parties agree upon all substantive terms of the sale. This normally includes the price, quantity, delivery terms and payment terms. In *Allied Tube,* the Court of International Trade (''CIT'') noted that a ''party seeking to establish a date of sale other than invoice date bears the burden of

[25] Secondary information is described in the *SAA* as ''information derived from the petition that gave rise to the investigation or review, the final determination concerning subject merchandise, or any previous review under section 751 concerning the subject merchandise.'' *See SAA* at 870.

producing sufficient evidence to satisfy the Department that a different date better reflects the date on which the exporter or producer establishes the material terms of sale.'' *Allied Tube* 132 F. Supp. 2d at 1090 (citations omitted). In order to simplify the determination of date of sale for both the respondent and the Department and in accordance with 19 CFR 351.401(i), the date of sale will normally be the date of the invoice, as recorded in the exporter's or producer's records kept in the ordinary course of business, unless satisfactory evidence is presented that the exporter or producer establishes the material terms of sale on some other date. In other words, the date of the invoice is the presumptive date of sale, although this presumption may be overcome. For instance, in *Final Determination of Sales at Less Than Fair Value: Polyvinyl Alcohol from Taiwan,* 61 FR 14064, 14067 (March 29, 1996), the Department used the date of the purchase order as the date of sale because the terms of sale were established at that point.

After examining the questionnaire responses and the sales documentation that Paslode and Xingya Group placed on the record, we preliminarily determine that invoice date is the most appropriate date of sale for all Paslode sales and for all CEP sales made by Xingya Group. For the Xingya Group's EP sales, where shipment date preceded invoice date, we used shipment date as the date of sale. For EP sales where shipment date was the same as or after the invoice date, we used the invoice date as the date of sale. *See* Xingya Group October 23, 2007, Section C questionnaire response at 11.

Fair Value Comparisons

To determine whether sales of nails to the United States by Paslode and Xingya Group were made at less than fair value, we compared the export price (''EP'') or constructed export price (''CEP''), as appropriate, to normal value (''NV''), as described in the ''U.S. Price,'' and ''Normal Value'' sections of this notice.

U.S. Price

A. EP

For Xingya Group, in accordance with section 772(a) of the Act, we based the U.S. price for certain sales on EP because the first sale to an unaffiliated purchaser was made prior to importation, and the use of CEP was not otherwise warranted. In accordance with section 772(c) of the Act, we calculated EP by deducting, where applicable, foreign inland freight, foreign brokerage and handling, international freight, and rebates from the gross unit price.

We based these movement expenses on surrogate values where a PRC company provided the service and was paid in Renminbi (''RMB'') (*see* ''Factors of Production'' section below for further discussion). For details regarding our EP calculation, *see* Xingya Group Analysis Memorandum.

B. CEP

In accordance with section 772(b) of the Act, we based the U.S. price for certain sales on CEP because these sales were made by Paslode's and Xingya Group's U.S. affiliates. In accordance with section 772(c)(2)(A) of the Act, we calculated CEP by deducting, where applicable, the following expenses from the gross unit price charged to the first unaffiliated customer in the United States: Marine insurance, discounts, rebates, billing adjustments, foreign movement expenses, and international freight, and United States movement expenses, including brokerage and handling. Further, in accordance with section 772(d)(1) of the Act and 19 CFR 351.402(b), where appropriate, we deducted from the starting price the following selling expenses associated with economic activities occurring in the United States: Credit expenses, warranty expenses, other direct selling expenses, and indirect selling expenses. In addition, pursuant to section 772(d)(3) of the Act, we made an adjustment to the starting price for CEP profit. We based movement expenses on either surrogate values, actual expenses, or an average of the two as explained above in the ''EP'' section of this notice. For details regarding our CEP calculations, *see* Memorandum to the File from Nicole Bankhead, Senior Case Analyst: Program Analysis for the Preliminary Determination of Antidumping Duty Investigation of Certain Steel Nails from the People's Republic of China: Paslode, dated January 15, 2008 (''Paslode Analysis Memorandum''); Xingya Group Analysis Memorandum.

Normal Value

Section 773(c)(1) of the Act provides that the Department shall determine the NV using a FOP methodology if the merchandise is exported from an NME and the information does not permit the calculation of NV using home-market prices, third-country prices, or constructed value under section 773(a) of the Act. The Department bases NV on the FOP because the presence of government controls on various aspects of non-market economies renders price comparisons and the calculation of production costs invalid under the Department's normal methodologies.

Factor Valuation Methodology

In accordance with section 773(c) of the Act, we calculated NV based on FOP data reported by respondents for the POI. To calculate NV, we multiplied the reported per-unit factor-consumption rates by publicly available surrogate values (except as discussed below). In selecting the surrogate values, we considered the quality, specificity, and contemporaneity of the data. As appropriate, we adjusted input prices by including freight costs to make them delivered prices. Specifically, we added to the Indian surrogate values a surrogate freight cost using the shorter of the reported distance from the domestic supplier to the factory or the distance from the nearest seaport to the factory where appropriate. This adjustment is in accordance with the Court of Appeals for the Federal Circuit's decision in *Sigma Corp.* v. *United States,* 117 F.3d 1401, 1407–1408 (Fed. Cir. 1997). A detailed description of all surrogate values used for respondents can be found in the Surrogate Value Memorandum and company-specific analysis memoranda. Additionally, for detailed descriptions of all actual values used for market-economy inputs, see the company-specific analysis memoranda dated January 15, 2008. *See* Paslode Analysis Memorandum; Xingya Group Analysis Memorandum.

For this preliminary determination, in accordance with the Department's practice, we used data from the Indian Import Statistics and other publicly available Indian sources in order to calculate surrogate values for the mandatory respondents' FOPs (direct materials, energy, and packing materials) and certain movement expenses. In selecting the best available information for valuing FOPs in accordance with section 773(c)(1) of the Act, the Department's practice is to select, to the extent practicable, surrogate values which are non-export average values, most contemporaneous with the POI, product-specific, and tax-exclusive. *See, e.g., Notice of Preliminary Determination of Sales at Less Than Fair Value, Negative Preliminary Determination of Critical Circumstances and Postponement of Final Determination: Certain Frozen and Canned Warmwater Shrimp From the Socialist Republic of Vietnam,* 69 FR 42672, 42682 (July 16, 2004), unchanged in *Final Determination of Sales at Less Than Fair Value: Certain Frozen and Canned Warmwater Shrimp from the Socialist Republic of Vietnam,* 69 FR

71005 (December 8, 2004). The record shows that data in the Indian Import Statistics, as well as that from the other Indian sources, represent data that are contemporaneous with the POI, product-specific, and tax-exclusive. In those instances where we could not obtain publicly available information contemporaneous to the POI with which to value factors, we adjusted the surrogate values using, where appropriate, the Indian Wholesale Price Index (''WPI'') as published in the International Financial Statistics of the International Monetary Fund.

Furthermore, with regard to the Indian import-based surrogate values, we have disregarded import prices that we have reason to believe or suspect may be subsidized. We have reason to believe or suspect that prices of inputs from Indonesia, South Korea, and Thailand may have been subsidized. We have found in other proceedings that these countries maintain broadly available, non-industry-specific export subsidies and, therefore, it is reasonable to infer that all exports to all markets from these countries may be subsidized. *See Notice of Final Determination of Sales at Less Than Fair Value and Negative Final Determination of Critical Circumstances: Certain Color Television Receivers From the People's Republic of China,* 69 FR 20594 (April 16, 2004) and accompanying Issues and Decision Memorandum at Comment 7 (*''CTVs from the PRC''*). Further, guided by the legislative history, it is the Department's practice not to conduct a formal investigation to ensure that such prices are not subsidized. *See* H.R. Rep. 100–576 at 590 (1988). Rather, the Department bases its decision on information that is available to it at the time it makes its determination. Therefore, we have not used prices from these countries either in calculating the Indian import-based surrogate values or in calculating market-economy input values. In instances where a market-economy input was obtained solely from suppliers located in these countries, we used Indian import-based surrogate values to value the input. *See Final Determination of Sales at Less Than Fair Value: Certain Automotive Replacement Glass Windshields From The People's Republic of China,* 67 FR 6482 (February 12, 2002), and accompanying Issues and Decision Memorandum at Comment 1.

The Department used the Indian Import Statistics to value the raw material and packing material inputs that Paslode and Xingya Group used to produce the subject merchandise during the POI, except where listed below.

For direct, indirect, and packing labor, consistent with 19 CFR 351.408(c)(3), we used the PRC regression-based wage rate as reported on Import Administration's home page, Import Library, Expected Wages of Selected NME Countries, revised in January 2007, *http://ia.ita.doc.gov/wages/index.html.* The source of these wage-rate data on the Import Administration's web site is the Yearbook of Labour Statistics 2002, ILO (Geneva: 2002), Chapter 5B: Wages in Manufacturing. Because this regression-based wage rate does not separate the labor rates into different skill levels or types of labor, we have applied the same wage rate to all skill levels and types of labor reported by the respondent. *See* Surrogate Value Memorandum.

To value factory overhead, selling, general, and administrative expenses, and profit, we used the audited financial statements from Lakshmi Precision Screws' 2006–2007 Annual Report. While this company produces comparable rather than identical merchandise, it uses an integrated wire-drawing production process with steel wire rod as the main input, which closely mirrors that of the mandatory respondents. Lakshmi therefore possesses a more similar cost structure than that of a company which produces merchandise from higher value steel wire that does not undergo the wire-drawing stage.

To value low and medium carbon steel wire rod, we used price data fully contemporaneous with the POI for 6mm and 8mm steel wire rod available on the Web site of the Indian Joint Plant Committee (''JPC''). The JPC is a joint industry/government board that monitors Indian steel prices. These data are publicly available, specific to the input in question, represent a broad market average, and are tax-exclusive. *See* 19 CFR 351.408(c)(1).

For a detailed discussion of all surrogate values used for this preliminary determination, see Surrogate Values Memorandum.

Currency Conversion

We made currency conversions into U.S. dollars, in accordance with section 773A(a) of the Act, based on the exchange rates in effect on the dates of the U.S. sales as certified by the Federal Reserve Bank.

Critical Circumstances

On November 7, 2007, Petitioners alleged that there is a reasonable basis to believe or suspect critical circumstances exist with respect to the antidumping investigation of nails from the PRC. On December 3, 2007, Paslode and Xingya Group submitted information on their exports of nails from January 2005 through September 2007 as requested by the Department (collectively, ''mandatory respondents'') (see mandatory respondents'' December 3, 2007 Critical Circumstances Questionnaire responses (''CCQR'')). In accordance with 19 CFR 351.206(c)(2)(i), because Petitioners submitted critical circumstances allegations more than 20 days before the scheduled date of the preliminary determination, the Department must issue preliminary critical circumstances determinations not later than the date of the preliminary determination.

Section 733(e)(1) of the Act provides that the Department will preliminarily determine that critical circumstances exist if there is a reasonable basis to believe or suspect that: (A)(i) There is a history of dumping and material injury by reason of dumped imports in the United States or elsewhere of the subject merchandise; or (ii) the person by whom, or for whose account, the merchandise was imported knew or should have known that the exporter was selling the subject merchandise at less than its fair value and that there was likely to be material injury by reason of such sales; and (B) there have been massive imports of the subject merchandise over a relatively short period. Section 351.206(h)(1) of the Department's regulations provides that, in determining whether imports of the subject merchandise have been ''massive,'' the Department normally will examine: (i) The volume and value of the imports; (ii) seasonal trends; and (iii) the share of domestic consumption accounted for by the imports. In addition, section 351.206(h)(2) of the Department's regulations provides that an increase in imports of 15 percent during the ''relatively short period'' of time may be considered ''massive.'' Section 351.206(i) of the Department's regulations defines ''relatively short period'' as normally being the period beginning on the date the proceeding begins (*i.e.*, the date the petition is filed) and ending at least three months later (*i.e.*, the comparison period). The comparison period is normally compared to the three months prior to the filing of the petition (*i.e.*, the base period). *Id.* The regulations also provide, however, that if the Department finds that importers, exporters, or producers had reason to believe, at some time prior to the beginning of the proceeding, that a proceeding was likely, the Department may establish the base and comparison periods based on the earlier date. *Id.*

In determining whether the above statutory criteria have been satisfied, we examined: (1) The evidence presented in Petitioners' November 7, 2007, submission; (2) new evidence obtained since the initiation of the LTFV investigation (*i.e.*, additional import statistics released by the U.S. Customs and Border Protection); and (3) additional information obtained from Xingya and Paslode (*see* CCQR).

In accordance with section 733(e)(1)(A)(ii) of the Act, to determine whether importers of nails from the PRC knew or should have known that the exporter was selling the subject merchandise at less than its fair value and that there was likely to be material injury by reason of such sales, the Department must rely on the facts before it at the time the determination is made. The Department generally bases its decision with respect to knowledge on the margins calculated in the preliminary antidumping duty determination and the ITC preliminary injury determination.

The Department normally considers margins of 25 percent or more for export price EP sales and 15 percent or more for CEP sales sufficient to impute importer knowledge of sales at LTFV. *See, e.g., Carbon and Alloy Steel Wire Rod From Germany, Mexico, Moldova, Trinidad and Tobago, and Ukraine: Notice of Preliminary Determination of Critical Circumstances*, 67 FR 6224, 6225 (February 11, 2002) unchanged in *Notice of Final Determination of Sales at Less Than Fair Value: Carbon and Certain Alloy Steel Wire Rod From Germany*, 67 FR 55802 (August 30, 2002). In this preliminary determination, Xingya Group has a margin of 44.57 percent and Paslode has a margin of 20.77 percent. The SR Recipients, which have preliminarily received a separate rate, have a margin of 29.36 percent, based on a weighted-average of the margins of the Mandatory Respondents. The PRC-wide entity has a margin of 118.04. We find that the antidumping duty preliminary margins for Xingya Group, Paslode, the SR Recipients, and the PRC-wide entity support a finding that there is a reasonable basis to believe or suspect that the importers knew or should have known that there was likely to be material injury by reason of sales at LTFV of nails from the PRC from these respondents.

In determining whether to find that an importer knew or should have known that there would be material injury by reason of dumped imports, the Department normally will look to the preliminary injury determination of the ITC. If the ITC finds a reasonable indication of present material injury to the relevant U.S. industry, the Department will determine that a reasonable basis exists to impute importer knowledge that there would be material injury by reason of dumped imports. *See Notice of Final Determination of Sales at Less Than Fair Value: Stainless Steel Sheet and Strip in Coils From Japan*, 64 FR 30574, 30578 (June 8, 1999). On July 31, 2007, the ITC issued its preliminary affirmative injury determination for nails from the PRC. *See ITC Preliminary Determination*. As a result, the Department has determined that importers knew or should have known that there would be material injury by reason of dumped imports of subject merchandise from Japan.

In accordance with section 733(e)(1)(B) of the Act, the Department must determine whether there have been massive imports of the subject merchandise over a relatively short period. Pursuant to 19 CFR 351.206(h), we will not consider imports to be massive unless imports in the comparison period have increased by at least 15 percent over imports in the base period. As discussed above, the Department normally determines the comparison period for massive imports based on the filing date of the petition. Based on the May 29, 2007, filing date, we have determined that June 2007 is the month in which importers, exporters or producers knew or should have known an antidumping duty investigation was likely.

It is our practice to base the critical circumstances analysis on all available data, using base and comparison periods of no less than three months. *See Notice of Preliminary Determination of Sales at Less Than Fair Value, Postponement of Final Determination, and Affirmative Preliminary Determination of Critical Circumstances: Certain Frozen and Canned Warmwater Shrimp from India*, 69 FR 47111 (Aug. 4, 2004) unchanged in the final determination, (*Notice of Final Determination of Sales at Less Than Fair Value and Negative Final Determination of Critical Circumstances: Certain Frozen and Canned Warmwater Shrimp From India,* 69 FR 76916 (December 23, 2004)); and *Notice of Final Determination of Sales at Less Than Fair Value and Negative Final Determination of Critical Circumstances: Certain Color Television Receivers From the People's Republic of China*, 69 FR 20594 (Apr. 16, 2004), and accompanying Issues and Decision Memorandum at Comment 3. We believe that a five-month period is most appropriate as the basis for our critical circumstances analysis because using five months capture all data available at this time, based on June 2007 as the beginning of the comparison period. Additionally, a five-month period properly reflects the ''relatively short period'' set forth in the statute for determining whether imports have been massive. *See* 733(e)(1)(B) of the Act. Therefore, in applying the five-month period, we used a comparison period of January 2007, to May 2007, and a base period of June 2007, to October 2007.

Mandatory Respondents

The Department used the shipment data of Paslode and Xingya Group to examine the relevant comparison period of five months before June 2007 and five months following that period. When we compared Xingya Group's import data during the base period with the comparison period, it had an increased volume of exports over the base period of greater than 15 percent and consequently, we find their imports to be massive. *See* Memorandum to the File from Paul Walker, Senior Case Analyst: Critical Circumstances Data for the Preliminary Determination of Antidumping Duty Investigation of Certain Steel Nails from the People's Republic of China, dated January 15, 2008, at Attachment II (''CC MTF'') for the exact percentage changes. Additionally, when we compared Paslode's import data during the base period with the comparison period, it did not have an increased volume of exports over the base period of greater than 15 percent and consequently, we find their exports not to be massive.

SR Recipients

For the SR Recipients, we did not request the monthly shipment information necessary to determine if there were massive imports. As the basis to measure whether massive imports existed for purposes of critical circumstances, we relied on the experience of the Mandatory Respondents receiving a separate rate. When we compared the weight-averaged import data during the base period with the comparison period from the Mandatory Respondents, we found that the weight-averaged volume of imports of nails for the SR Recipients did not increase 15 percent over the base period. *See* CC MTF at Attachment II for the exact percentage changes.

PRC Entity

Because the PRC entity failed to respond to the Department's antidumping questionnaire, we were unable to obtain shipment data from the PRC entity for purposes of our critical circumstances analysis, and there is no

information on the record with respect to its export volumes. We relied on the ITC Dataweb site (*http://databweb.usitc.gov*) to determine whether there were imports of nails from the PRC during the base and the comparison periods not accounted for in the shipment data for the Mandatory Respondents. *See* CC MTF at Attachment I. We found that there were such imports and we were able to rely on such data to quantify the imports attributed to the PRC-wide entity because the HTSUS article codes covering imported nails from China contain mostly data for subject merchandise, allowing us to segregate the Mandatory Respondents' data from the China-wide import data.

We have deducted the Mandatory Respondents' data from the China-wide import data as to avoid possible double-counting. When we compared the PRC-wide entity import data during the adjusted base period with the adjusted comparison period, we found that the volume of imports of nails for the PRC-wide entity during the comparison period was greater than 15 percent over the base period. *See* CC MTF at Attachment II. Consequently, we find that the PRC-wide entity did have an increased volume of exports over the base period of greater than 15 percent, and therefore, we find their imports to be massive.

In accordance with section 733(e)(1)(A)(ii) of the Act, the Department preliminarily determines that importers knew or should have known that the PRC entity was selling nails at LTFV because the PRC entity's preliminary dumping margin was greater than 15 percent. See Xingya Group Analysis Memo. In addition, as a result of the ITC's affirmative preliminary determination in the instant LTFV investigation, the Department preliminarily finds there is a reasonable basis to believe or suspect that importers knew or should have known that there was likely to be material injury by reason of dumped imports, consistent with section 733(e)(1)(A)(ii) of the Act. *See ITC Preliminary Determination*. As discussed above, the volume of imports of nails from the PRC-wide entity was massive within the meaning of section 733(e)(1)(B) of the Act. The volumes of imports of nails for Xingya Group was above 15 percent, and were thus massive within the meaning of 733(e)(1)(B) of the Act. However, for Paslode and the SR Recipients, the volume of imports was below 15 percent, and were thus not massive within the meaning of section 733(e)(1)(B) of the Act. As a result, we preliminarily find that critical circumstances exist for the PRC-wide entity and Xingya Group, but do not exist for imports of nails from Paslode and the SR Recipients.

We will make a final determination concerning critical circumstances for all producers/exporters of subject merchandise from the PRC when we make our final dumping determination in this investigation, which is currently 135 days after the preliminary determination.

Targeted Dumping

Based on our examination of the targeted dumping allegations filed by Petitioners on December 10, 2007, December 14, 2007,[26] and consideration of the rebuttal comments submitted by Paslodes and the Xingya Group, we have determined that the allegations indicate that there is a pattern of export prices for comparable merchandise that differs significantly. *See Notice of Final Determination of Sales at Less than Fair Value: Coated Free Sheet Paper from the Republic of Korea*, 72 FR 60630 (October 17, 2007), and accompanying Issues and Decision Memorandum at Comments 1–8. Therefore, for purposes of this preliminary determination, we have preliminarily accepted the Petitioner's allegation that Paslode targeted certain regions and Xingya targeted certain customers during the POI.[27] *See* Memorandum To The File from Alex Villanueva, Program Manager To James C. Doyle, Director, Office 9, regarding ''Antidumping Duty Investigation of Certain Steel Nails from the People's Republic of China—Preliminary Analysis on Targeting,'' dated January 15, 2008.

We note, however, that the Department is in the process of re-assessing the framework and standards for both targeted dumping allegations and targeted dumping analyses. Accordingly, we intend to develop a new framework in the context of this proceeding and to apply it in time for parties to have an opportunity to comment before the final determination.

In formulating this new methodology the Department requests comments by February 15, 2008, regarding certain principles: (1) Whether it is appropriate to collapse into one test the assessment of patterns of low prices and of significant price differentials; (2) if so, whether the test for a pattern of low prices ought to be established on the basis of a simple comparison of the average price to the alleged target with an average non-targeted price; and (3) whether any test for a significant price difference ought to simply be based on an absolute, bright-line threshold or whether it should account for other aspects of the non-targeted group's data.

In preliminarily accepting the allegation of targeted dumping, we find that the price differences cannot be taken into account using the average-to-average comparison methodology for targeted sales because that methodology, by averaging the high prices with the low prices, has the effect of masking the extent of sales at LTFV. *See* section 777A(d)(1)(B) of the Act. Accordingly, we used the average-to-transaction methodology for these sales in accordance with 19 CFR 351.414(f)(1).

When calculating the weighted-average margin for Paslode and Xingya Group, we combined the margin calculated for the targeted sales using the average-to-transaction methodology with the margin calculated for the non-targeted sales using the average-to-average methodology. In combining the margins for the targeted and non-targeted U.S. sales databases, we have not offset any margins found among the targeted U.S. sales.

Verification

As provided in section 782(i)(1) of the Act, we intend to verify the information upon which we will rely in making our final determination.

Combination Rates

In the *Initiation Notice*, the Department stated that it would calculate combination rates for certain respondents that are eligible for a separate rate in this investigation. *See Initiation Notice*, 72 FR 38821, 38822. This change in practice is described in *Policy Bulletin 05.1*, available at *http://ia.ita.doc.gov/*.

The weighted-average dumping margins are as follows:[28]

[26] On January 10, 2008, Petitioners provided an almost identical targeted dumping allegation with the exception of converting the export price from kilograms to a per-carton basis.

[27] The Department made certain adjustments to Petitioner's allegations. *See Id*.

[28] Companies designated with a ''^'' are wholly foreign owned, ''+'' are located in a market economy, and a ''*'' are joint-venture companies between Chinese and foreign companies or are wholly Chinese owned, as explained above in the ''SEPARATE RATES'' section.

CERTAIN STEEL NAILS FROM THE PRC [28]

Exporter	Producer	Weighted-average margin (percent)
Paslode Fasteners (Shanghai) Co., Ltd.^	Paslode Fasteners (Shanghai) Co., Ltd	20.77
Xingya Group:*		
Suzhou Xingya Nail Co., Ltd	Suzhou Xingya Nail Co., Ltd	44.57
Senco-xingya Metal Products (Taicang) Co., Ltd	Senco-xingya Metal Products (Taicang) Co., Ltd.	
Hong Kong Yu Xi Co., Ltd	Wuxi Chengye Metal Products Co., Ltd.	
Jisco Corporation^	Qingdao Jisco Co., Ltd	29.36
Koram Panagene Co., Ltd.^	Qingdao Koram Steel Co., Ltd	29.36
Handuk Industrial Co., Ltd.^	Rizhao Handuk Fasteners Co., Ltd.; Rizhao Changxing Nail-making Co., Ltd	29.36
Kyung Dong Corp.*	Rizhao Qingdong Electric Appliance Co., Ltd	29.36
Xi'an Metals & Minerals Import and Export Co., Ltd.*	Huanghua Jinhai Hardware Products Co., Ltd	29.36
Hebei Cangzhou New Century Foreign Trade Co., Ltd.*	Huanghua Jinhai Hardware Products Co., Ltd.; Beijing Hongshen Metal Products Co., Ltd.; Tianjin Dagang Huasheng Nailery Co., Ltd.	29.36
Chongqing Hybest Tools Group Co., Ltd.*	Chongqing Hybest Nailery Co., Ltd	29.36
China Silk Trading & Logistics Co., Ltd.*	Maanshan Longer Nail Product Co., Ltd.; Wuxi Qiangye Metalwork Production Co., Ltd	29.36
Beijing Daruixing Global Trading*	Beijing Tri-metal Co., Ltd.; Beijing Daruixing Nail Products Co., Ltd.; Tianjin Kunxin Hardware Co., Ltd.; Tianjin Hewang Nail Making Factory.	29.36
Huanghua Jinhai Hardware Products Co.*	Huanghua Jinhai Hardware Products Co	29.36
Beijing Daruixing Nail Products Co., Ltd.*	Beijing Tri-metal Co., Ltd.; Beijing Daruixing Nail Products Co., Ltd	29.36
Beijing Tri-metal Co., Ltd.*	Beijing Daruixing Nail Products Co., Ltd	29.36
Cana (Tianjin) Hardware Inc., Co., Ltd.^	Cana (Tianjin) Hardware Inc., Co., Ltd.	29.36
China Staple Enterprise (Tianjin) Co., Ltd.^	ChinaStaple Enterprise (Tianjin) Co., Ltd	29.36
Hengshui Mingyao Hardware & Mesh Products Co, Ltd.^	Hengshui Mingyao Hardware & Mesh Products Co, Ltd	29.36
Nanjing Dayu Pneumatic Gun Nails Co., Ltd.^	Nanjing Dayu Pneumatic Gun Nails Co., Ltd.	29.36
Qidong Liang Chyuan Metal Industry Co., Ltd.^	Qidong Liang Chyuan Metal Industry Co., Ltd.	29.36
Romp (Tianjin) Hardware Co., Ltd.^	Romp (Tianjin) Hardware Co., Ltd	29.36
Shandong Dinglong Import & Export Co., Ltd.*	Qingyun Hongyi Hardware Factory	29.36
Tianjin Jinchi Metal Products Co., Ltd.*	Tianjin Jinchi Metal Products Co., Ltd	29.36
Tianjin Jinghai County Hongli Industry and Business Co., Ltd.*	Tianjin Jinghai County Hongli Industry and Business Co., Ltd	29.36
Tianjin Jurun Metal Products Co., Ltd.*	Tianjin Jurun Metal Products Co., Ltd	29.36
Zhejiang Gem-chun Hardware Accessory Co., Ltd.^	Zhejiang Gem-chun Hardware Accessory Co., Ltd	29.36
Huanghua Xionghua Hardware Products Co., Ltd.^	Huanghua Xionghua Hardware Products Co., Ltd	29.36
Zhaoqing Harvest Nails Co., Ltd.^	Zhaoqing Harvest Nails Co., Ltd	29.36
SDC International Australia Pty., Ltd.^	S-mart Tianjin Technology Development Co., Ltd.; Tianjin Jishili Hardware Co., Ltd. Tianjin Baisheng Metal Product Co., Ltd.; Tianjin Foreign Trade (Group) Textile & Garment Co., Ltd.; Dagang Zhitong Metal Products Co., Ltd.	29.36
Tianjin Universal Imp & Exp Corporation*	Huanghua Shenghua Hardware Manufactory Factory; Tianjin Dagang Dongfu Metallic Products Co., Ltd.; Tianjin Dagang Jingang Nail Factory; Tianjin Dagang Linda Metallic Products Co., Ltd.; Tianjin Dagang Yate Nail Co., Ltd.; Tianjin Jieli Hengyuan Metallic Products Co., Ltd. Tianjin Shishun Metallic Products Co., Ltd. Tianjin Yihao Metallic Products Co., Ltd. Tianjin Yongcang Metallic Products Co., Ltd.	29.36
Certified Products International Inc.+	Huanghua Jinhai Hardware Products Co., Ltd.; Shanxi Yuci Broad Wire Products Co., Ltd.; Hengshui Mingyao Hardware & Mesh Products Co., Ltd.; Tianjin Zhonglian Metals Ware Co., Ltd.; Beijing Daruixing Nail Products Co., Ltd.; Huanghua Xionghua Hardware Products Co., Ltd.; Tianjin Port Free Trade Zone Xiangtong Intnl. Industry & Trade Corp. Shangdong Dinglong Import & Export Co., Ltd.; Wuhu Shijie Hardware Co., Ltd.; Romp (Tianjin) Hardware Co., Ltd.; Tianjin Jurun Metal Products Co., Ltd.; Yitian (Nanjing) Hardware Co., Ltd.; Nanjing Da Yu Pneumatic Gun Nails Co., Ltd.; Wintime Import & Export Corporation Limited of Zhongshan; Tianjin Chentai International Trading Co., Ltd.; Tianjin Longxing (Group) Huanyu Imp. & Exp. Co., Ltd.; Zhejiang Gem-chun Hardware Accessory Co., Ltd.; Shanxi Pioneer Handware Industrial Co., Ltd.; Wuhu Xin Lan De Industrial Co., Ltd.; Tianjin Zhitong Metal Products; Suntec Industries Co., Ltd.; China Staple Enterprise (Tianjin) Co., Ltd.; Tianjin Jinghai Country Hongli Industry & Business Co., Ltd.; Hebei Super Star Pneumatic Nails Co., Ltd.; Shanghai Chengkai Hardware Products Co., Ltd.; Tianjin Jinchi Metal Products Co., Ltd.; Shaoxing Chengye Metal Producting Co., Ltd.; Tianjin Shenyuan Steel Producting Group Co., Ltd.; Shanghai Jade Shuttle Hardware Tools Co., Ltd.	29.36

CERTAIN STEEL NAILS FROM THE PRC [28]—Continued

Exporter	Producer	Weighted-average margin (percent)
Dezhou Hualude Hardware Products Co., Ltd.*	Tianjin Bosai Hardware Tools Co., Ltd.; Beijing Yonghongsheng Metal Products Co., Ltd.; Tianjin City Jinchi Metal Products Co., Ltd.; Huanghua Huarong Hardware Products Co., Ltd.; Huanghua Yufutai Hardware Products Co., Ltd.; Qingyuan County Hongyi Hardware Products Factory; Tianjin Zhitong Metal Products Co., Ltd.; Tianjin Baisheng Metal Products Co., Ltd.; Tianjin Dagang Hewang Nails Factory.	29.36
Shanxi Tianli Industries Co., Ltd.*	Dingzhou Ruili Nail Production Co., Ltd.; Haixing Hongda Hardware Production Co., Ltd.; Huanghua Xinda Nail Production Co., Ltd.; Tianjin Huachang Metal Products Co., Ltd.; Tianjin Huapeng Metal Company; Tianjin Huasheng Nails Production Co., Ltd.; Tianjin Jin Gang Metal Products Co., Ltd.; Tianjin Kunxin Metal Products Co., Ltd.; Tianjin Linda Metal Company; Tianjin Xinyaunsheng Metal Products Co., Ltd.; Tianjin Yongyi Standard Parts Production Co., Ltd.; Wuqiao Huifeng Hardware Production Co., Ltd..	29.36
Suntec Industries Co., Ltd.*	Wuqiao County Huifeng Hardware Products Factory; Wuqiao County Xinchuang Hardware Products Factory; Huanghua Jinhai Hardware Products Co., Ltd.; Haixin Linhai Hardware Products Factory; Tianjin Baisheng Metal Products Co., Ltd.; Tianjin City Jinchi Metal Products Co., Ltd.; Tianjin City Dagang Area Jinding Metal Products Factory; Tianjin Jishili Hardware Products Co., Ltd.; Tianjin Jietong Hardware Products Co., Ltd.; Tianjin Ruiji Metal Products Co., Ltd.; Tianjin Yongxu Metal Products Co., Ltd.; Wuxi Baolin Nail-making Machinery Co., Ltd.; Suzhou Xinya Nail Co., Ltd.	29.36
Sinochem Tianjin Imp & Exp Shenzhen Corp.*	Tianjin Jlhy Metal Products Co., Ltd.	29.36
Qingdao D&L Group Ltd.*	Tianjin City Daman Port Area Jinding Metal Products Factory; Tianjin Yongxu Metal Products Co., Ltd.; Huanghua Jinhai Metal Products Co., Ltd.; Dong'e Fuqiang Metal Products Co., Ltd.	29.36
Tianjin Xiantong Material & Trade Co., Ltd.*	Tianjin Xiantong Fucheng Gun Nail Manufacture Co., Ltd	29.36
Zhongshan Junlong Nail Manufactures Co., Ltd.+	Zhongshan Junlong Nail Manufactures Co., Ltd	29.36
Shandong Minmetals Co., Ltd.*	Shouguang Meiqing Nail Industry Co., Ltd	29.36
Shouguang Meiqing Nail Industry Co., Ltd.^	Shouguang Meiqing Nail Industry Co., Ltd	29.36
S-mart (Tianjin) Technology Development Co., Ltd.^	Tianjin Jishili Hardware Co., Ltd.; Tianjin Baisheng Metal Product Co., Ltd.; Tianjin Dagang Hewang Nail Factory; Tianjin Shishun Metal Products Co., Ltd.; Tianjin Xinyuansheng Metal Product Co., Ltd.; Tianjin Yongchang Metal Product Co., Ltd.	29.36
Tianjin Liande Group Co., Ltd.*	Tianjin Dagang Hewang Nails Manufacture Plant; Tianjin Dagang Jingang Nails Manufacture Plant; Tianjin Dagang Longhua Nails Manufacture Plant; Tianjin Dagang Shenda Metal Products Co., Ltd.; Tianjin Jietong Metal Products Co., Ltd.; Tianin Qichuan Metal Products Co., Ltd.; Tianjin Yongxu Metal Products Co., Ltd.; Zhangjiagang Longxiang Packing Materials Co., Ltd.	29.36
Union Enterprise Co., Ltd.^	Union Enterprise Co., Ltd	29.36
Beijing Hong Sheng Metal Co., Ltd.*	Beijing Hong Sheng Metal Co., Ltd	29.36
PT Enterprise Inc.+	Shanxi Hairui Trade Co., Ltd.; Shanxi Pioneer Hardware Industrial Co., Ltd.; Shanxi Yuci Broad Wire Products Co., Ltd.	29.36
Shanxi Hairui Trade Co., Ltd.*	Shanxi Pioneer Hardware Industrial Co., Ltd.; Shanxi Yuci Broad Wire Products Co., Ltd.	29.36
Shanxi Pioneer Hardware Industrial Co., Ltd.*	Shanxi Pioneer Hardware Industrial Co., Ltd	29.36
Shanxi Yuci Broad Wire Products Co., Ltd.*	Shanxi Yuci Broad Wire Products Co., Ltd	29.36
Yitian Nanjing Hardware Co., Ltd.^	Yitian Nanjinghardware Co., Ltd	29.36
Chiieh Yung Metal Ind. Corp.+	Cym (Nanjing) Nail Manufacture Co., Ltd	29.36
Shanghai Seti Enterprise International Co., Ltd.*	Suzhou Yaotian Metal Products Co. Ltd	29.36
Shanghai Curvet Hardware Products Co., Ltd.^	Shanghai Tengyu Hardware Tools Co., Ltd	29.36
Shanghai Tengyu Hardware Tools Co., Ltd.*	Shanghai Curvet Hardware Products Co., Ltd	29.36
Xuzhou CIP International Group Co., Ltd.^	Xuzhou Cip International Group Co., Ltd	29.36
Wuhu Shijie Hardware Co., Ltd.*	Wuhu Shijie Hardware Co., Ltd	29.36
Wuhu Xin Lan De Industrial Co., Ltd.*	Wuhu Xin Lan De Industrial Co., Ltd	29.36
Tianjin Zhonglian Metals Ware Co., Ltd.*	Tianjin Zhonglian Metals Ware Co., Ltd	29.36
Jining Huarong Hardware Products Co., Ltd.*	Jining Huarong Hardware Products Co., Ltd	29.36
Mingguang Abundant Hardware Products Co., Ltd.*	Mingguang Abundant Hardware Products Co., Ltd	29.36
Shandong Oriental Cherry Hardware Group Co., Ltd.*	Shandong Oriental Cherry Hardware Group Co., Ltd	29.36

CERTAIN STEEL NAILS FROM THE PRC [28]—Continued

Exporter	Producer	Weighted-average margin (percent)
Shandong Oriental Cherry Hardware Import and Import Co., Ltd.*	Shandong Oriental Cherry Hardware Import and Import Co., Ltd	29.36
Shanghai Chengkai Hardware Product. Co., Ltd.^	Shanghai Chengkai Hardware Product. Co., Ltd	29.36
Shanghai Jade Shuttle Hardware Tools Co., Ltd.^	Shanghai Jade Shuttle Hardware Tools Co., Ltd	29.36
Shanghai Yueda Nails Industry Co., Ltd.*	Shanghai Yueda Nails Industry Co., Ltd	29.36
Besco Machinery Industry (Zhejiang) Co., Ltd. +	Besco Machinery Industry (Zhejiang) Co., Ltd	29.36
The Stanley Works (Langfang) Fastening Systems Co., Ltd.^	The Stanley Works (Langfang) Fastening Systems Co., Ltd	29.36
Guangdong Foreign Trade Import & Export Corporation*	Shanghai Nanhui Jinjun Handware Factory	29.36
PRC-wide		118.04

Disclosure

We will disclose the calculations performed within five days of the date of publication of this notice to parties in this proceeding in accordance with 19 CFR 351.224(b).

Suspension of Liquidation

In accordance with section 733(d) of the Act, we will instruct U.S. Customs and Border Protection (''CBP'') to suspend liquidation of all entries of nails from the PRC as described in the ''Scope of Investigation'' section, entered, or withdrawn from warehouse, for consumption from Paslode and the SR Recipients on or after the date of publication of this notice in the **Federal Register**. We will instruct CBP to require a cash deposit or the posting of a bond equal to the weighted-average amount by which the normal value exceeds U.S. price, as indicated above. For Xingya Group and the PRC-wide entity, we will direct CBP to suspend liquidation of any entries of nails from the PRC as described in the ''Scope of Investigation'' section, that are entered, or withdrawn from warehouse, for consumption on or after 90 days prior to the date of publication in the **Federal Register** of our preliminary determination. The suspension of liquidation will remain in effect until further notice.

International Trade Commission Notification

In accordance with section 733(f) of the Act, we have notified the ITC of our preliminary affirmative determination of sales at less than fair value. Section 735(b)(2) of the Act requires the ITC to make its final determination as to whether the domestic industry in the United States is materially injured, or threatened with material injury, by reason of imports of nails, or sales (or the likelihood of sales) for importation, of the subject merchandise within 45 days of our final determination.

Public Comment

Case briefs or other written comments may be submitted to the Assistant Secretary for Import Administration no later than seven days after the date of the final verification report is issued in this proceeding and rebuttal briefs limited to issues raised in case briefs no later than five days after the deadline date for case briefs (*see* 351.309(d)). A list of authorities used and an executive summary of issues should accompany any briefs submitted to the Department. This summary should be limited to five pages total, including footnotes.

In accordance with section 774 of the Act, and if requested, we will hold a public hearing, to afford interested parties an opportunity to comment on arguments raised in case or rebuttal briefs. If a request for a hearing is made, we intend to hold the hearing shortly after the deadline of submission of rebuttal briefs at the U.S. Department of Commerce, 14th Street and Constitution Ave., NW., Washington, DC 20230, at a time and location to be determined. Parties should confirm by telephone the date, time, and location of the hearing two days before the scheduled date.

Interested parties who wish to request a hearing, or to participate if one is requested, must submit a written request to the Assistant Secretary for Import Administration, U.S. Department of Commerce, Room 1870, within 30 days after the date of publication of this notice. *See* 19 CFR 351.310(c). Requests should contain the party's name, address, and telephone number, the number of participants, and a list of the issues to be discussed. At the hearing, each party may make an affirmative presentation only on issues raised in that party's case brief and may make rebuttal presentations only on arguments included in that party's rebuttal brief.

Postponement of Final Determination and Extension of Provisional Measures

Pursuant to section 735(a)(2) of the Act, on January 3, 2008, Xingya Group requested that in the event of an affirmative preliminary determination in this investigation, the Department postpone its final determination by 60 days. At the same time, Xingya Group requested that the Department extend the application of the provisional measures prescribed under 19 CFR 351.210(e)(2) from a 4-month period to a 6-month period. In accordance with section 733(d) of the Act and 19 CFR 351.210(b), because (1) our preliminary determination is affirmative, (2) the requesting exporter accounts for a significant proportion of exports of the subject merchandise, and (3) no compelling reasons for denial exist, we are granting the request and are postponing the final determination until no later than 135 days after the publication of this notice in the **Federal Register**. Suspension of liquidation will be extended accordingly.

This determination is issued and published in accordance with sections 733(f) and 777(i)(1) of the Act.

Dated: January 15, 2008.

David M. Spooner,

Assistant Secretary for Import Administration.

[FR Doc. E8–1106 Filed 1–22–08; 8:45 am]

BILLING CODE 3510–DS–P

DEPARTMENT OF COMMERCE

International Trade Administration

[A–428–815]

Corrosion-Resistant Carbon Steel Flat Products from Germany: Rescission of Antidumping Duty Administrative Review

AGENCY: Import Administration, International Trade Administration, Department of Commerce.

SUMMARY: In response to a request from United States Steel Corporation, petitioner (''U.S. Steel''), the Department of Commerce (''the Department'') initiated an administrative review of the antidumping duty order on corrosion-resistant carbon steel flat products (''CORE'') from Germany. *See Initiation of Antidumping and Countervailing Duty Administrative Reviews and Requests for Revocation in Part*, 72 FR 54428 (September 25, 2007). This administrative review covers the period August 1, 2006, through July 31, 2007. We are now rescinding this review due to a request by U.S. Steel to rescind the review.

DATES: *Effective Date:* January 23, 2008.

FOR FURTHER INFORMATION CONTACT: John Drury or Angelica Mendoza, AD/CVD Operations, Office 7, Import Administration, International Trade Administration, U.S. Department of Commerce, 14th Street and Constitution Avenue, NW., Room 7866, Washington, DC 20230; telephone: (202) 482–0195 or (202) 482–3019, respectively.

Background

The Department published an antidumping duty order on CORE from Germany on August 19, 1993. *See Antidumping Duty Orders and Amendments to Final Determinations of Sales at Less Than Fair Value: Certain Hot Rolled Carbon Steel Flat Products, Certain Cold-Rolled Carbon Steel Flat Products, Certain Corrosion-Resistant Carbon Steel Flat Products and Certain Cut-to-Length Carbon Steel Plate from Germany*, 58 FR 44170 (August 19, 1993). The Department published a notice of ''Opportunity to Request an Administrative Review'' of the antidumping duty order for the period August 1, 2006, through July 31, 2007, on August 2, 2007. *See Antidumping or Countervailing Duty Order, Finding, or Suspended Investigation; Opportunity To Request Administrative Review*, 72 FR 42383 (August 2, 2007). U.S. Steel requested that the Department conduct an administrative review of sales of merchandise covered by the order by ThyssenKrupp Steel AG (''ThyssenKrupp'') on August 31, 2007. In response to the request from U.S. Steel, the Department published the initiation of the antidumping duty administrative review on CORE from Germany on September 25, 2007. See Initiation of Antidumping and Countervailing Duty Administrative Reviews and Requests for Revocation in Part, 72 FR 54428 (September 25, 2007).

The Department issued a questionnaire to ThyssenKrupp on October 19, 2007. The Department received responses from ThyssenKrupp on December 3, 2007, and December 18, 2007. U.S. Steel withdrew its request for review with respect to ThyssenKrupp on December 26, 2007.

Rescission of the Administrative Review

Pursuant to 19 CFR 351.213(d)(1), the Secretary will rescind an administrative review under this section, in whole or in part, if a party that requested a review withdraws the request within 90 days of the date of publication of notice of initiation of the requested review. The Secretary may extend this time limit if the Secretary decides that it is reasonable to do so. *See* 19 CFR 351.213(d)(1). U.S. Steel's request is timely, as 90 days fell on December 24, 2007, which was a holiday. As December 25, 2007, was also a holiday, U.S. Steel could not have submitted a request to rescind the review until the first business day after the holidays, or December 26, 2007. Additionally, no party has objected to the termination of the review. Therefore, the Department determines that the continuation of the administrative review is not necessary.

In response to U.S. Steel's withdrawal of its request for administrative reviews pursuant to 19 CFR 351.213(d)(1), the Department hereby rescinds the administrative review of the antidumping duty order on CORE from Germany for the period August 1, 2006, through July 31, 2007. The Department intends to issue assessment instructions to CBP 15 days after the date of publication of this rescission of administrative review.

This notice serves as a reminder to parties subject to administrative protective order (''APO'') of their responsibility concerning the disposition of proprietary information disclosed under APO in accordance with 19 CFR 351.305(a)(3). Timely written notification of the return or destruction of APO materials or conversion to judicial protective order is hereby requested. Failure to comply with the regulations and terms of an APO is a sanctionable violation.

This notice is published in accordance with sections 751(a)(1) and 777(i)(1) of the Tariff Act of 1930, as amended, and 19 CFR 351.213(d)(4).

Dated: January 15, 2008.

Stephen J. Claeys,

Deputy Assistant Secretary for Import Administration.

[FR Doc. E8–1101 Filed 1–22–08; 8:45 am]

BILLING CODE 3510–DS–P

DEPARTMENT OF COMMERCE

International Trade Administration

Export Trade Certificate of Review

AGENCY: International Trade Administration, Commerce.

ACTION: Notice of Application for an Export Trade Certificate of Review from Artalex Global.

SUMMARY: Export Trading Company Affairs (''ETCA''), International Trade Administration, Department of Commerce, has received an application for an Export Trade Certificate of Review (''Certificate''). This notice summarizes the conduct for which certification is sought and requests comments relevant to whether the Certificate should be issued.

FOR FURTHER INFORMATION CONTACT: Jeffrey Anspacher, Director, Export Trading Company Affairs, International Trade Administration, by telephone at (202) 482–5131 (this is not a toll-free number) or E-mail at *oetca@ita.doc.gov.*

SUPPLEMENTARY INFORMATION: Title III of the Export Trading Company Act of 1982 (15 U.S.C. 4001–21) authorizes the Secretary of Commerce to issue Export Trade Certificates of Review. An Export Trade Certificate of Review protects the holder and the members identified in the Certificate from state and federal government antitrust actions and from private treble damage antitrust actions for the export conduct specified in the Certificate and carried out in compliance with its terms and conditions. Section 302(b)(1) of the Export Trading Company Act of 1982 and 15 CFR 325.6(a) require the Secretary to publish a notice in the **Federal Register** identifying the applicant and summarizing its proposed export conduct.

Request for Public Comments

Interested parties may submit written comments relevant to the determination whether a Certificate should be issued. If the comments include any privileged or confidential business information, it must be clearly marked and a nonconfidential version of the

comments (identified as such) should be included. Any comments not marked privileged or confidential business information will be deemed to be nonconfidential. An original and five (5) copies, plus two (2) copies of the nonconfidential version, should be submitted no later than 20 days after the date of this notice to: Export Trading Company Affairs, International Trade Administration, U.S. Department of Commerce, Room 7021–B H, Washington, DC 20230. Information submitted by any person is exempt from disclosure under the Freedom of Information Act (5 U.S.C. 552). However, nonconfidential versions of the comments will be made available to the applicant if necessary for determining whether or not to issue the Certificate. Comments should refer to this application as ''Export Trade Certificate of Review, application number 08–00001.'' A summary of the application follows.

Summary of the Application

Applicant: Artalex Global (''ARGLO''), 6632 Meadow Fawn Drive, Converse, Texas 78109.

Contact: Gregory A. Agho, President/CEO, Telephone: (210) 384–9494.

Application No.: 08–00001.

Date Deemed Submitted: January 14, 2008.

Members (in addition to applicant): None.

ARGLO seeks a Certificate to cover the following specific Export Trade, Export Markets, and Export Trade Activities and Methods of Operations.

Export Trade

1. *Products*

All Products.

2. *Services*

All Services.

3. *Technology Rights*

Technology rights, including, but not limited to, patents, trademarks, copyrights, and trade secrets that relate to Products and Services.

4. *Export Trade Facilitation Services (as they Relate to the Export of Products, Services and Technology Rights)*

Export Trade Facilitation Services, including, but not limited to, professional services in the areas of government relations and assistance with state and federal programs; foreign trade and business protocol; consulting; market research and analysis; collection of information on trade opportunities; marketing; negotiations; joint ventures; shipping; export management; export licensing; advertising; documentation and services related to compliance with customs requirements; insurance and financing; trade show exhibitions; organizational development; management and labor strategies; transfer of technology; transportation services; and facilitating the formation of shippers' associations.

Export Markets

The Export Markets include all parts of the world except the United States (the fifty states of the United States, the District of Columbia, the Commonwealth of Puerto Rico, the Virgin Islands, American Samoa, Guam, the Commonwealth of the Northern Mariana Islands, and the Trust Territory of the Pacific Islands).

Export Trade Activities and Methods of Operation

1. With respect to the sale of Products and Services, licensing of Technology Rights and provision of Export Trade Facilitation Services, ARGLO may:

a. Provide and/or arrange for the provision of Export Trade Facilitation Services;

b. Engage in promotional and marketing activities and collect information on trade opportunities in the Export Markets and distribute such information to clients;

c. Enter into exclusive and/or non-exclusive licensing and/or sales agreements with Suppliers for the export of Products, Services, and/or Technology Rights to Export Markets;

d. Enter into exclusive and/or non-exclusive arrangements with distributors and/or sales representatives in Export Markets;

e. Allocate export sales or divide Export Markets among Suppliers for the sale and/or licensing of Products, Services, and/or Technology Rights;

f. Allocate export orders among Suppliers;

g. Establish the price of Products, Services, and/or Technology Rights for sales and/or licensing in Export Markets;

h. Negotiate, enter into, and/or manage licensing agreements for the export of Technology Rights; and

i. Enter into contracts for shipping of Products to Export Markets.

2. ARGLO may exchange information on a one-to-one basis with individual Suppliers regarding that Supplier's inventories and near-term production schedules for the purpose of determining the availability of Products for export and coordinating export with distributors.

Dated: January 16, 2008.

Jeffrey Anspacher,

Director, Export Trading Company Affairs.

[FR Doc. E8–1114 Filed 1–22–08; 8:45 am]

BILLING CODE 3510–DR–P

DEPARTMENT OF COMMERCE

International Trade Administration

[Application No. 85–14A18]

Export Trade Certificate of Review

ACTION: Notice of Issuance of an Amended Export Trade Certificate of Review to U.S. Shippers Association.

SUMMARY: The U.S. Department of Commerce has issued an amended Export Trade Certificate of Review (''Certificate'') to the U.S. Shippers Association (''USSA'') on January 16, 2008. USSA's application to amend its Certificate was announced in the **Federal Register** on October 25, 2007 (72 FR 60648). The original Certificate No. 85–00018 was issued to USSA on June 3, 1986, and announced in the **Federal Register** on June 9, 1986 (51 FR 20873). The previous amendment (No. 85–13A018) was issued to USSA on November 27, 2007, and announced in the **Federal Register** December 4, 2007 (72 FR 68128).

FOR FURTHER INFORMATION CONTACT: Jeffrey Anspacher, Director, Export Trading Company Affairs, International Trade Administration, by telephone at (202) 482–5131 (this is not a toll-free number) or E-mail at *oetca@ita.doc.gov*.

SUPPLEMENTARY INFORMATION: Title III of the Export Trading Company Act of 1982 (15 U.S.C. 4001–21) authorizes the Secretary of Commerce to issue Export Trade Certificates of Review. The regulations implementing Title III are found at 15 CFR Part 325 (2006).

Export Trading Company Affairs is issuing this notice pursuant to 15 CFR 325.6(b), which requires the Department of Commerce to publish a summary of the certification in the **Federal Register**. Under Section 305(a) of the Act and 15 CFR 325.11(a), any person aggrieved by the Secretary's determination may, within 30 days of the date of this notice, bring an action in any appropriate district court of the United States to set aside the determination on the ground that the determination is erroneous.

Description of Amended Certificate

USSA's Export Trade Certificate of Review has been amended to: Add the following company as a new ''Member'' of the Certificate within the meaning of section 325.2(1) of the Regulations (15 CFR 325.2(1)): Cook Composites and Polymers Co., North Kansas City, Missouri (controlling entity: TOTAL Holdings USA, Inc., Houston Texas).

The effective date of the amended certificate is October 18, 2007, the date on which USSA's application to amend was deemed submitted. A copy of the

amended Certificate will be kept in the International Trade Administration's Freedom of Information Records Inspection Facility, Room 4001, U.S. Department of Commerce, 14th Street and Constitution Avenue, NW., Washington, DC 20230.

Dated: January 17, 2008.

Jeffrey Anspacher,

Director, Export Trading Company Affairs.

[FR Doc. E8–1122 Filed 1–22–08; 8:45 am]

BILLING CODE 3510–DR–P

DEPARTMENT OF COMMERCE

International Trade Administration

[A–552–801]

Certain Frozen Fish Fillets From the Socialist Republic of Vietnam: Extension of Time Limit for Final Results of the Third Antidumping Duty Administrative Review

AGENCY: Import Administration, International Trade Administration, Department of Commerce.

EFFECTIVE DATE: January 23, 2008.

FOR FURTHER INFORMATION CONTACT: Catherine Bertrand, AD/CVD Operations, Office 9, Import Administration, International Trade Administration, U.S. Department of Commerce, 14th Street and Constitution Avenue, NW., Washington, DC 20230; *telephone:* (202) 482–3207.

Background

On August 31, 2007, the Department of Commerce (''Department'') issued the preliminary results of this administrative review. *See Certain Frozen Fish Fillets from the Socialist Republic of Vietnam: Notice of Preliminary Results of the Third Antidumping Duty Administrative Review*, 72 FR 53527 (September 19, 2007) (''*Preliminary Results*''). The final results are currently due on January 17, 2008.

Extension of Time Limits for Final Results

Section 751(a)(3)(A) of the Tariff Act of 1930, as amended (''Act''), and 19 CFR 351.211(b)(5) require the Department to issue the final results in an administrative review of an antidumping duty order 120 days after the date on which the preliminary results are published. The Department may, however, extend the deadline for completion of the final results of an administrative review to 180 days if it determines it is not practicable to complete the review within the foregoing time period. *See* section 751(a)(3)(A) of the Act and 19 CFR 351.213(h)(2).

The Department finds that it is not practicable to complete the final results in the administrative review of certain frozen fish fillets from Vietnam within this time limit. Specifically, the Department needs additional time to consider Respondent East Sea Foods Joint Venture Co., Ltd.'s responses. Additionally, the Department is extending the deadline for the final results to accommodate parties' public hearing requests so parties may address all issues. For the reasons noted above, we are extending the time for the completion of the final results of this review by 60 days to March 17, 2008.

This notice is published in accordance with section 751(a)(3)(A) of the Act and section 351.213(h)(2) of the Department's regulations.

Dated: January 15, 2008.

Stephen J. Claeys,

Deputy Assistant Secretary for Import Administration.

[FR Doc. E8–1107 Filed 1–22–08; 8:45 am]

BILLING CODE 3510–DS–P

DEPARTMENT OF COMMERCE

International Trade Administration

[A–520–802]

Certain Steel Nails From the United Arab Emirates: Notice of Preliminary Determination of Sales at Less Than Fair Value and Postponement of Final Determination

AGENCY: Import Administration, International Trade Administration, Department of Commerce.

SUMMARY: We preliminarily determine that certain steel nails (nails) from the United Arab Emirates (UAE) are being, or are likely to be, sold in the United States at less than fair value (LTFV), as provided in section 733(b) of the Tariff Act of 1930, as amended (the Act). Interested parties are invited to comment on this preliminary determination. We will make our final determination within 135 days after the date of this preliminary determination.

EFFECTIVE DATE: January 23, 2008.

FOR FURTHER INFORMATION CONTACT: David Goldberger or Kate Johnson, AD/CVD Operations, Office 2, Import Administration, International Trade Administration, U.S. Department of Commerce, 14th Street and Constitution Avenue, NW., Washington, DC 20230; *telephone:* (202) 482–4136 or (202) 482–4929, respectively.

Background

Since the initiation of this investigation (*see Certain Steel Nails from the People's Republic of China and the United Arab Emirates: Initiation of Antidumping Duty Investigations*, 72 FR 38816 (July 16, 2007) (*Initiation Notice*)), the following events have occurred.

On July 30, 2007, the United States International Trade Commission (ITC) preliminarily determined that there is a reasonable indication that imports of nails from the UAE are materially injuring the United States industry. *See* ITC Investigation Nos. 731–TA–1114–1115 (Publication No. 3939).

On August 24, 2007, we selected Dubai Wire FZE (DW), the largest producer/exporter of nails from the UAE, as the mandatory respondent in this proceeding. *See* Memorandum to James Maeder, Director Office 2, from David Goldberger and Kate Johnson, Senior International Trade Compliance Analysts, regarding ''Antidumping Duty Investigation of Certain Steel Nails from the United Arab Emirates—Selection of Respondents,'' dated August 24, 2007. We subsequently issued the antidumping questionnaire to DW and its affiliate Global Fasteners Ltd. (GFL) on August 27, 2007.

DW submitted its Section A and C questionnaire responses on October 9, 2007, and October 18, 2007, respectively. We received a response to Section D of the questionnaire on October 25, 2007. We issued and received responses to our supplemental questionnaires from December 2007 through January 2008.

On October 26, 2007, the petitioners [1] filed a targeted dumping allegation against DW under section 777A(d)(1)(B) of the Act. The Department requested additional information from the petitioners with respect to their targeted dumping allegation on November 30, 2007. The petitioners responded to this request on December 10, 2007. DW submitted comments to dispute the allegation on December 20, 2007. *See* ''Targeted Dumping'' section below for further discussion.

On November 1, 2007, pursuant to sections 733(c)(1)(B) and (c)(2) of the Act and 19 CFR 351.205(f), the petitioners requested that the Department postpone the preliminary determination due to the complexities

[1] The petitioners are Mid Continent Nail Corporation, Davis Wire Corporation, Gerdau Ameristeel Corporation (Atlas Steel & Wire Division), Maze Nails (Division of W.H. Maze Company), and Treasure Coast Fasteners, Inc. and United Steel, Paper and Forestry, Rubber, Manufacturing, Energy, Allied Industrial and Service Workers International Union.

of the investigation and the required analysis for it, and because the Department was still involved in gathering initial data from the respondent at that time. *See Certain Steel Nails from the People's Republic of China and the United Arab Emirates: Postponement of Preliminary Determinations of Antidumping Duty Investigations*, 72 FR 63558 (November 9, 2007).

On December 20, 2007, the petitioners submitted comments for the Department's consideration in the preliminary determination.

Postponement of Final Determination

Section 735(a)(2) of the Act provides that a final determination may be postponed until not later than 135 days after the date of the publication of the preliminary determination if, in the event of an affirmative preliminary determination, a request for such postponement is made by exporters who account for a significant proportion of exports of the subject merchandise, or, in the event of a negative preliminary determination, a request for such postponement is made by the petitioner. The Department's regulations, at 19 CFR 351.210(e)(2), require that requests by respondents for postponement of a final determination be accompanied by a request for extension of provisional measures from a four-month period to not more than six months.

Pursuant to section 735(a)(2) of the Act, on December 27, 2007, DW requested that, in the event of an affirmative preliminary determination in this investigation, the Department postpone its final determination until not later than 135 days after the date of the publication of the preliminary determination in the **Federal Register**, and extend the provisional measures to not more than six months. In accordance with 19 CFR 351.210(b), because (1) our preliminary determination is affirmative, (2) the respondent accounts for a significant proportion of exports of the subject merchandise, and (3) no compelling reasons for denial exist, we are granting the respondent's request and are postponing the final determination until no later than 135 days after the publication of this notice in the **Federal Register**. Suspension of liquidation will be extended accordingly.

Period of Investigation

The period of investigation (POI) is April 1, 2006, through March 31, 2007. This period corresponds to the four most recent fiscal quarters prior to the month of the filing of the petition (*i.e.*, May 2007).

Scope of Investigation

The merchandise covered by this investigation includes certain steel nails having a shaft length up to 12 inches. Certain steel nails include, but are not limited to, nails made of round wire and nails that are cut. Certain steel nails may be of one piece construction or constructed of two or more pieces. Certain steel nails may be produced from any type of steel, and have a variety of finishes, heads, shanks, point types, shaft lengths and shaft diameters. Finishes include, but are not limited to, coating in vinyl, zinc (galvanized, whether by electroplating or hot-dipping one or more times), phosphate cement, and paint. Head styles include, but are not limited to, flat, projection, cupped, oval, brad, headless, double, countersunk, and sinker. Shank styles include, but are not limited to, smooth, barbed, screw threaded, ring shank and fluted shank styles. Screw-threaded nails subject to this proceeding are driven using direct force and not by turning the fastener using a tool that engages with the head. Point styles include, but are not limited to, diamond, blunt, needle, chisel and no point. Finished nails may be sold in bulk, or they may be collated into strips or coils using materials such as plastic, paper, or wire. Certain steel nails subject to this proceeding are currently classified under the Harmonized Tariff Schedule of the United States (HTSUS) subheadings 7317.00.55, 7317.00.65 and 7317.00.75.

Excluded from the scope of this proceeding are roofing nails of all lengths and diameter, whether collated or in bulk, and whether or not galvanized. Steel roofing nails are specifically enumerated and identified in ASTM Standard F 1667 (2005 revision) as Type I, Style 20 nails. Also excluded from the scope of this proceeding are corrugated nails. A corrugated nail is made of a small strip of corrugated steel with sharp points on one side. Also excluded from the scope of this proceeding are fasteners suitable for use in powder-actuated hand tools, not threaded and threaded, which are currently classified under HTSUS 7317.00.20 and 7317.00.30. Also excluded from the scope of this proceeding are thumb tacks, which are currently classified under HTSUS 7317.00.10.00. Also excluded from the scope of this proceeding are certain brads and finish nails that are equal to or less than 0.0720 inches in shank diameter, round or rectangular in cross section, between 0.375 inches and 2.5 inches in length, and that are collated with adhesive or polyester film tape backed with a heat seal adhesive.[2]

While the HTSUS subheadings are provided for convenience and customs purposes, the written description of the scope of this investigation is dispositive.

Scope Comments

In accordance with the preamble to our regulations, we set aside a period of time for parties to raise issues regarding product coverage and encouraged all parties to submit comments within 20 calendar days of publication of the *Initiation Notice. See Antidumping Duties; Countervailing Duties; Final Rule*, 62 FR 27296, 27323 (May 19, 1997) and *Initiation Notice* at 72 FR 38817.

In this investigation, and the concurrent investigation of nails from the People's Republic of China (PRC), we received three scope exclusion requests during the period July 2007 through January 2008.

On July 30, 2007,[3] Stanley Fastening Systems, LP (Stanley), an interested party in this proceeding, requested that banded brads and finish nails imported with a ''nailer kit'' or ''combo kit''[4] as a single package be excluded from this investigation as being outside the ''class or kind'' of merchandise. Stanley conducted a *Diversified Products*[5] analysis in support of its position claiming that banded products imported in the same package as a pneumatic nailer and sold as a ''nailer kit'' or ''combo kit'' are not within the class or kind of merchandise covered in the scope of the instant investigation. In addition, Stanley states that, to the best of its information and belief, none of the petitioning companies in this investigation manufacture banded brads or finish nails.

On August 9, 2007,[6] the petitioners objected to this exclusion request, arguing that the scope of this proceeding is comprehensive and, while the scope

[2] *See* ''Scope Comments'' section below for further discussion.

[3] This submission was filed on the record of the PRC investigation on July 30, 2007, and on the record of the instant investigation on January 7, 2008.

[4] A ''nailer kit'' consists of a pneumatic nailer, a ''starter box'' of branded products and a carrying case. A ''combo kit'' consists of an air compressor, a pneumatic nailer, and a ''starter box'' of banded products and related accessories, such as an air hose.

[5] Prior to being codified in the regulations, these factors were identified by the Court of International Trade in *Diversified Products Corp.* v. *United States*, 572 F. Supp. 883 (CIT 1983), and therefore, they are also referred to as the ''*Diversified Products* factors.''

[6] This submission was filed on the record of the PRC investigation on August 9, 2007, and on the record of the instant investigation on January 7, 2008.

contains specific exclusions, it does not exclude any nails based on their importation in combination with one or more other articles. The petitioners claimed that it is their intention that the scope of this proceeding include all certain steel nails exhibiting the physical characteristics identified in the written scope description, regardless of how imported. Furthermore, according to the petitioners, a *Diversified Products* analysis requires a determination that collated steel finish nails remain scope merchandise, whether imported on their own or with a nail gun. Finally, the petitioners cite several cases [7] in support of their contention that Department precedent supports their argument that these finish nails are merchandise covered by the scope of investigation. According to the petitioners, these rulings address fundamentally different types of kits or sets of merchandise, in which the subject merchandise at issue is subsumed with a set of goods whose essential character is defined as something other than the merchandise itself.

On August 15, 2007,[8] Stanley responded to the petitioners' August 9, 2007, submission claiming that none of the petitioners' arguments supports a conclusion that banded products imported in nailer kits are within the subject class of kind of merchandise.

On December 12, 2007, Stanley revised its July 30, 2007, scope exclusion request arguing that its new request reflects a broader exclusion and is easily administered by U.S. Customs and Border Protection (CBP) because the description of the excluded brads and finish nails is framed solely in terms of their physical characteristics. On December 18, 2007, the petitioners filed a letter stating that they agree with Stanley's December 12, 2007, scope exclusion request.

Therefore, based on the scope exclusion request from Stanley, the fact that the petitioners are in agreement with this request, and there appears to be no impediment to enforceability by CBP,[9] we preliminarily determine that the above-described products are not subject to the scope of this investigation.[10]

In addition, the petitioners requested that the Department modify the scope of these investigations to exclude certain trademarked products in submissions dated October 5, 2007, October 12, 2007, October 24, 2007, and November 1, 2007.[11] However, we found that the proposed scope modification language, which would exclude only specifically registered trademarked products, would provide an improper scope for this investigation because its effect would be to exclude only products of the parties controlling those trademarks, while the same products without the specified trademarks would be included, creating a scope that is neither impartial nor reasonable. Furthermore, the trademark requirement may cause significant administrability problems for CBP should an antidumping duty order be issued. Therefore, on November 15, 2007, we determined it inappropriate to modify the scope of this investigation in accordance with the petitioners' request. *See* Memorandum To David M. Spooner, Assistant Secretary for Import Administration, from Stephen J. Claeys, Deputy Assistant Secretary for Import Administration, AD/CVD Operations regarding ''Certain Steel Nails from the People's Republic of China (''PRC'') and the United Arab Emirates (''UAE''): Scope Modification Request'' dated November 15, 2007.

On January 3, 2008,[12] Hilti, Inc., an interested party in this investigation, requested that fasteners having a case hardness greater than or equal to 50 HRC, a carbon content greater than or equal to 0.5 percent, a round head, a secondary reduced-diameter raised head section, a centered shank, and a smooth symmetrical point, suitable for use in gas-actuated hand tools be excluded from the scope of this investigation.[13] We received this request too late to consider for purposes of the preliminary determination, but will consider it for the final determination.

Targeted Dumping

Based on our examination of the targeted dumping allegation filed on October 26, 2007, we have preliminarily determined that the petitioners' allegation indicates that there is a pattern of export prices for comparable merchandise that differs significantly, consistent with that accepted by the Department in Coated Free Sheet Paper from South Korea. (*See Issues and Decision Memorandum for the Final Determination of the Less-Than-Fair-Value Investigation of Coated Free Sheet Paper from the Republic of Korea*, dated October 17, 2007.) Therefore, based on the petitioners' allegation, for purposes of this preliminary determination, we have conducted an analysis to determine whether targeted dumping has occurred. For further discussion of the Department's preliminary targeted dumping analysis, *see* Memorandum to James Maeder, Director, AD/CVD Operations, Office 2, from Irene Darzenta Tzafolias, regarding ''Antidumping Duty Investigation of Certain Steel Nails from the United Arab Emirates—Preliminary Analysis on Targeting,'' dated January 15, 2008.

We note, however, that the Department is in the process of re-assessing the framework and standards for both targeted dumping allegations and targeted dumping analyses. Accordingly, we intend to develop a new framework in the context of this proceeding and to apply it in time for parties to have an opportunity to comment before the final determination.

In formulating this new methodology the Department requests comments by February 15, 2008, regarding certain principles: (1) Whether it is appropriate to collapse into one test the assessment of patterns of low prices and of significant price differentials; (2) if so, whether the test for a pattern of low prices ought to be established on the basis of a simple comparison of the average price to the alleged target with an average non-targeted price; and (3) whether any test for a significant price difference ought to simply be based on an absolute, bright-line threshold or

[7] *See, e.g.*, Memorandum from Wendy J. Frankel, Director, AD/CVD Operations, Office 8, to Barbara E. Tillman, Acting Deputy Assistant Secretary for Import Administration, *Final Scope Ruling—Antidumping Duty Order on Certain Cased Pencils from the People's Republic of China—Request by Fiskars Brands, Inc.* (June 3, 2005); Memorandum from Laurie Parkhill, Director, Office 8, AD/CVD Enforcement, To Jeffrey A. May, Deputy Assistant Secretary for Import Administration, *Final Scope Ruling—Antidumping Duty Order on Certain Cased Pencils from the People's Republic of China—Request by Target Corporation Regarding ''Hello Kitty Fashion Totes''* (September 29, 2004).

[8] This submission was filed on the record of the PRC investigation on August 15, 2007, and on the record of the instant investigation on January 7, 2008.

[9] *See* Memorandum to the File from Kate Johnson, Senior Case Analyst, to The File entitled ''Proposed Scope Exclusion,'' dated January 15, 2008.

[10] On January 8, 2008, Illinois Tool Works Inc., an interested party, opposed the exclusion request filed by Stanley, arguing that it is the only U.S. producer of the products at issue. While the Department notes ITW's objection, it strives to craft a scope that both includes the specific products for which the petitioners have requested relief, and excludes those products which may fall within the general scope definition, but for which the petitioners do not seek relief. (This submission was filed on the record of the PRC investigation on January 8, 2008, and on the record of the instant investigation on January 11, 2008.)

[11] Each submission contained a revised version of the proposed scope modification.

[12] This submission was filed on the record of the PRC investigation on January 3, 2008, and on the record of the instant investigation on January 8, 2008.

[13] On January 8, 2008, Illinois Tool Works Inc., an interested party, opposed the exclusion request filed by Hilti, Inc., arguing that it is the only U.S. producer of the products at issue. On January 9, 2008, the petitioners filed a letter stating that they agree with Hilti's January 3, 2008, scope exclusion request.

whether it should account for other aspects of the non-targeted group's data.

In preliminarily accepting the allegation of targeted dumping, we find that the price differences cannot be taken into account using the average-to-average comparison methodology for targeted sales because that methodology, by averaging the high prices with the low prices, has the effect of masking the extent of sales at LTFV. *See* section 777A(d)(1)(B) of the Act. Accordingly, we used the average-to-transaction methodology for these sales in accordance with 19 CFR 351.414(f)(1).

When calculating DW's weighted-average margin, we combined the margin calculated for the targeted sales using the average-to-transaction methodology with the margin calculated for the non-targeted sales using the average-to-average methodology. In combining the margins for the targeted and non-targeted U.S. sales databases, we have not offset any margins found among the targeted U.S. sales.

Collapsing of GFL With DW

For purposes of the preliminary determination, we have treated DW and GFL, an affiliate of DW that is involved in the production and sale of nails,[14] as one entity for dumping margin calculation purposes, pursuant to 19 CFR 351.401(f). DW and GFL are affiliated under section 771(33)(F) of the Act and 19 CFR 351.102 because both companies are under the common control of one individual, share identical board members, and the common company officers have the ability to exercise control over the companies (19 CFR 351.401(f)(1)). Furthermore, pursuant to 19 CFR 351.401(f)(1) and (2), DW and GFL have production facilities for substantially similar products at the same location that would not require substantial retooling of either facility to restructure manufacturing priorities, and there is significant potential for the manipulation of price or production if the two companies do not receive the same antidumping duty rate based on the level of common ownership and management, and intertwined operations. *See* Memorandum For Stephen J. Claeys, Deputy Assistant Secretary for Import Administration, From The Team, regarding ''Whether or Not to Collapse Dubai Wire FZE and Global Fasteners Ltd. in the Antidumping Duty Investigation of Certain Steel Nails from the United Arab Emirates,'' dated January 15, 2008.

Fair Value Comparisons

To determine whether sales of nails from the UAE were made at LTFV, we compared the export price (EP) to the normal value (NV), as described in the ''Export Price'' and ''Normal Value'' sections of this notice, below. In accordance with section 777A(d)(1)(A)(i) of the Act, for the non-targeted sales, we compared POI weighted-average EPs to NVs. For targeted sales, we used the average-to-transaction methodology in accordance with section 777A(d)(1)(B) of the Act and 19 CFR 351.414(f)(1). *See* ''Targeted Dumping'' section above for further discussion.

As discussed below under the ''Home Market Viability and Comparison Market Selection'' section, we determined that DW/GFL did not have a viable home or third country market during the POI. Therefore, as the basis for NV, we used constructed value (CV) when making comparisons in accordance with section 773(a)(4) of the Act.

Export Price

For DW's sales to the United States we used EP price methodology, in accordance with section 772(a) of the Act, because the subject merchandise was sold directly to the first unaffiliated purchaser in the United States prior to importation by the exporter or producer outside the United States. We based EP on the packed C&F (cost and freight), CIF (cost, insurance and freight) or DDP (delivered, duty paid) prices to unaffiliated purchasers in the United States.

Where appropriate, we made adjustments to the starting price for billing adjustments and rebates. We made deductions for movement expenses in accordance with section 772(c)(2)(A) of the Act; these included, where appropriate, foreign inland freight, foreign brokerage and handling, international freight, marine insurance, U.S. brokerage and handling, and U.S. customs duties.

DW reported invoice as the date of sale. However, our review of the sales data indicates that, in some cases, the reported shipment date precedes the reported invoice date. In such circumstances, the Department normally uses the earlier of invoice date or shipment date as the date of sale. *See, e.g., Stainless Steel Sheet and Strip in Coils from the Republic of Korea; Preliminary Results and Partial Rescission of Antidumping Duty Administrative Review,* 71 FR 18074, 18079–80 (April 10, 2006), remaining unchanged in *Stainless Steel Sheet and Strip in Coils from the Republic of Korea; Final Results and Rescission of Antidumping Duty Administrative Review in Part,* 72 FR 4486 (January 31, 2007). Accordingly, we used the earlier of the reported shipment date or reported sale date (*i.e.*, invoice date) for determining the date of sale.

Normal Value

A. Home Market Viability and Comparison Market Selection

In order to determine whether there is a sufficient volume of sales in the home market to serve as a viable basis for calculating NV (*i.e.*, the aggregate volume of home market sales of the foreign like product is equal to or greater than five percent of the aggregate volume of U.S. sales), we compared DW's/GFL's volume of home market sales of the foreign like product to the volume of U.S. sales of the subject merchandise, in accordance with section 773(a)(1)(C) of the Act.

We determined that DW's/GFL's aggregate volume of home market and third country sales of the foreign like product were insufficient to permit a proper comparison with U.S. sales of the subject merchandise. Therefore, we used CV as the basis for calculating NV, in accordance with section 773(a)(4) of the Act.

B. Level of Trade

In accordance with section 773(a)(1)(B) of the Act, to the extent practicable, we determine NV based on sales in the comparison market at the same level of trade (LOT) as the EP or CEP. The NV LOT is that of the starting-price sales in the comparison market or, when NV is based on CV, that of the sales from which we derive selling, general and administrative expenses (SG&A) and profit. For EP, the U.S. LOT is also the level of the starting-price sale, which is usually from exporter to importer. For CEP, it is the level of the constructed sale from the exporter to the importer.

To determine whether NV sales are at a different LOT than EP or CEP sales, we examine stages in the marketing process and selling functions along the chain of distribution between the producer and the unaffiliated customer. If the comparison-market sales are at a different LOT, and the difference affects price comparability, as manifested in a

[14] GFL manufactures screws (non-subject merchandise) at the same location where DW is located and performs wire drawing (one of the manufacturing processes in nail making) and heat treatment (for heat treated nails) for DW. The equipment used by GFL for wire drawing and heat treatment is owned by DW and located at GFL's facility. During the POI, DW produced a very small quantity of nails for GFL. GFL then heat treated and phosphate coated these nails, packed the nails and sold them to home market and third-country customers.

pattern of consistent price differences between the sales on which NV is based and comparison market sales at the LOT of the export transaction, we make an LOT adjustment under section 773(a)(7)(A) of the Act. Finally, for CEP sales, if the NV level is more remote from the factory than the CEP level and there is no basis for determining whether the difference in levels between NV and CEP affects price comparability, we adjust NV under section 773(a)(7)(B) of the Act (the CEP-offset provision). *See Notice of Final Determination of Sales at Less Than Fair Value: Certain Cut-to-Length Carbon Steel Plate from South Africa,* 62 FR 61731 (Nov. 19, 1997).

In the United States, DW made EP sales to original equipment manufacturers and other distributors through the same channel of distribution, performing the identical selling functions. Therefore, we determine that there is only one LOT for EP sales.

DW/GFL had no viable home or third country market during the POI. Therefore, we based NV on CV. When NV is based on CV, the NV LOT is that of the sales from which we derive SG&A expenses and profit. *See Notice of Preliminary Determination of Sales at Less Than Fair Value and Postponement of Final Determination: Fresh Atlantic Salmon from Chile,* 63 FR 2664 (January 16, 1998). In accordance with 19 CFR 351.412(d), the Department will make its LOT determination under paragraph (d)(1) of this section on the basis of sales of the foreign like product by the producer or exporter. Because we based the selling expenses and profit for DW/GFL on GFL's home market sales of nails and screws, we could not determine the LOT of the sales from which we derived selling expenses and profit for CV, nor is there sufficient information on the record to determine whether an LOT adjustment is warranted. (*See* ''Calculation of Normal Value Based on Constructed Value'' section below for further discussion on the derivation of CV selling expenses and profit.). Therefore, we made no LOT adjustment to NV.

C. Calculation of Normal Value Based on Constructed Value

In accordance with section 773(e) of the Act, we calculated CV based on the sum of the respondent's cost of materials and fabrication for the foreign like product, plus amounts for SG&A, profit, and U.S. packing costs. We relied on the respondent's submitted materials and fabrication costs, G&A expenses and U.S. packing costs. We made the following adjustments to the reported CV information:

1. We revised the scrap offset to the total cost of manufacturing to reflect the value of the scrap quantities generated rather than the scrap quantities sold.
2. Because we collapsed DW and GFL for purposes of this investigation, we revised the total cost of manufacturing to reflect the actual cost of services provided by GFL, rather than using the transfer price paid by DW to GFL.
3. Because DW's 2007 fiscal year more closely correlates to the POI, we revised the company's reported G&A and financial expense rates by using the company's 2007 audited financial statements, rather than the 2006 financial statements.
4. We revised DW's financial expense rate to exclude the long-term interest income reported as an offset to financial expenses.

We calculated selling expenses and profit, in accordance with section 773(e)(2)(B)(i) of the Act, as detailed in the Memorandum to Neal Halper from Heidi Schriefer, regarding ''Cost of Production and Constructed Value Calculation Adjustments for the Preliminary Determination,'' dated January 15, 2008 (*Preliminary Determination Cost Calculation Memo*).

Because the Department has determined for purposes of this preliminary determination that DW/GFL does not have a viable comparison market, we could not determine selling expenses and profit under section 773(e)(2)(A) of the Act. Therefore, we relied on section 773(d)(2)(B) of the Act to determine these selling expenses and profit. Specifically, we used the selling expense and profit rates derived from GFL's home market sales of nails and screws, merchandise that is within the same general category of products as the subject merchandise. *See Preliminary Determination Cost Calculation Memo.* The statute does not establish a hierarchy for selecting among the alternative methodologies provided in section 773(e)(2)(B) of the Act for determining selling expenses and profit. *See* Statement of Administrative Action Accompanying the URAA, H.R. Rep. No. 103–316, vol. 1, at 840 (1994). Alternative (i) of section 773(e)(2)(B) of the Act specifies that selling expenses and profit may be calculated based on ''actual amounts incurred by the specific exporter or producer * * * on merchandise in the same general category'' as the subject merchandise. DW and GFL, an affiliated screw producer, were collapsed into a single entity for purposes of this investigation. Therefore, we calculated DW's/GFL's selling expenses and profit based on alternative (i) of section 773(e)(2)(B) of the Act, which is to use the respondent's expenses on sales of merchandise in the same general category, *i.e.*, GFL's home market sales of nails and screws.

We computed the selling expense and profit ratios based on GFL's home market sales of nails and screws, and applied the selling expense ratio to the sum of the cost of materials and fabrication to determine CV selling expenses, and applied the profit ratio to the sum of the cost of materials, fabrication, and general expenses to calculate an amount for profit.

D. Price-to-CV Comparisons

GFL's selling expenses related to its sales of nails and screws do not include direct selling expenses.[15] Accordingly, for comparisons to EP, we added DW's U.S. direct selling expenses without also deducting direct selling expenses derived from GFL's home market sales of nails and screws.

Currency Conversion

The Department's preferred source for daily exchange rates is the Federal Reserve Bank. *See Preliminary Results of Antidumping Duty Administrative Review: Stainless Steel Sheet and Strip in Coils from France,* 68 FR 47049, 47055 (August 7, 2003), remaining unchanged in *Final Results of Antidumping Duty Administrative Review: Stainless Steel Sheet and Strip in Coils from France,* 68 FR 69379 (December 12, 2003). However, the Federal Reserve Bank does not track or publish exchange rates for the UAE dirham. Therefore, we made currency conversions from UAE dirhams to U.S. dollars based on the daily exchange rates from Factiva, a Dow Jones & Reuters Retrieval Service. Factiva publishes exchange rates for Monday through Friday only. We used the rate of exchange on the most recent Friday for conversion dates involving Saturday through Sunday, where necessary.

Verification

As provided in section 782(i) of the Act, we will verify all information relied upon in making our final determination.

Suspension of Liquidation

In accordance with section 733(d)(2) of the Act, we are directing CBP to suspend liquidation of all entries of nails from the UAE that are entered, or withdrawn from warehouse, for consumption on or after the date of publication of this notice in the **Federal**

[15] The direct selling expenses reported by the respondent in its January 3, 2008, submission are, in fact, movement and packing expenses.

Register. We are also instructing CBP to require a cash deposit or the posting of a bond equal to the weighted-average dumping margins, as indicated in the chart below. These suspension-of-liquidation instructions will remain in effect until further notice.

The weighted-average dumping margins are as follows:

Exporter/manufacturer	Weighted-average margin percentage
Dubai Wire FZE/Global Fasteners Ltd	4.47
All Others	4.47

ITC Notification

In accordance with section 733(f) of the Act, we have notified the ITC of our determination. If our final determination is affirmative, the ITC will determine before the later of 120 days after the date of this preliminary determination or 45 days after our final determination whether these imports are materially injuring, or threaten material injury to, the U.S. industry.

Disclosure

We will disclose the calculations used in our analysis to parties in this proceeding in accordance with 19 CFR 351.224(b).

Public Comment

Interested parties are invited to comment on the preliminary determination. Interested parties may submit case briefs to the Department no later than seven days after the date of the issuance of the final verification report in this proceeding. Rebuttal briefs, the content of which is limited to the issues raised in the case briefs, must be filed within five days from the deadline date for the submission of case briefs. A list of authorities used, a table of contents, and an executive summary of issues should accompany any briefs submitted to the Department. Executive summaries should be limited to five pages total, including footnotes. Further, we request that parties submitting briefs and rebuttal briefs provide the Department with a copy of the public version of such briefs on diskette. In accordance with section 774 of the Act, the Department will hold a public hearing, if timely requested, to afford interested parties an opportunity to comment on arguments raised in case or rebuttal briefs, provided that such a hearing is requested by an interested party. If a request for a hearing is made in this investigation, the hearing will tentatively be held two days after the rebuttal brief deadline date at the U.S. Department of Commerce, 14th Street and Constitution Avenue, NW., Washington, DC 20230, at a time and in a room to be determined.

Interested parties who wish to request a hearing, or to participate in a hearing if one is requested, must submit a written request to the Assistant Secretary for Import Administration, U.S. Department of Commerce, Room 1870, within 30 days of the publication of this notice. *Requests should contain:* (1) The party's name, address, and telephone number; (2) the number of participants; and (3) a list of the issues to be discussed. At the hearing, oral presentations will be limited to issues raised in the briefs.

We will make our final determination no later than 135 days after the publication of this notice in the **Federal Register**.

This determination is issued and published pursuant to sections 733(f) and 777(i)(1) of the Act.

Dated: January 15, 2008.

David M. Spooner,

Assistant Secretary for Import Administration.

[FR Doc. E8–1109 Filed 1–22–08; 8:45 am]

BILLING CODE 3510–DS–P

DEPARTMENT OF ENERGY

Notice of 229 Boundary Revision for the Oak Ridge Gaseous Diffusion Plant

AGENCY: Department of Energy (DOE).

ACTION: Notice of 229 Boundary Revision for the Oak Ridge Gaseous Diffusion Plant.

SUMMARY: Notice is hereby given that the U.S. Department of Energy, pursuant to Section 229 of the Atomic Energy Act of 1954, as amended, as implemented by 10 CFR part 860 published in the **Federal Register** on August 26, 1963 (28 FR 8400), prohibits the unauthorized entry, as provided in 10 CFR 860.3 and the unauthorized introduction of weapons or dangerous materials, as provided in 10 CFR 860.4, into or upon the following described facilities of the Oak Ridge Gaseous Diffusion Plant of the United States Department of Energy. The following amendments are made:

Deletions From Inclusion Within the Existing 299 Boundary

Raw Water Pumping Station—K–901

The K–901 raw water pumping station, including two outside water intake pumps enclosed by a 7-foot chain link fence topped with three strands of barbed wire, and a one-story building of transite construction approximately 22 feet by 25 feet in size, located in the Second Civil District, Roane County, Tenn., within the corporate limits of the city of Oak Ridge, on the east bank of the Clinch River at approximately river mile 11.5.

Raw Water Pumping Station—K–1513

The K–1513 raw water pumping station including a one-story brick building approximately 26 x 18 feet in size and outside electric transformers, located in the Second Civil District, Roane County, Tenn., within the corporate limits of the city of Oak Ridge on the E. bank of the Clinch river at approximately river mile 14.5.

Water Purification Plant—K–1515

The K–1515 Water Purification Plant including a steel water tank approximately 39 feet in diameter and 23 feet high, located in the Second Civil District, Roane County, Tenn., within the corporate limits of the city of Oak Ridge, on the N. side of Bear Creek Road approximately 0.2 mile E. of the W. end of Bear Creek Road.

Pine Ridge Antenna Facility—K–805

The Pine Ridge Antenna Facility consisting of two wooden radio antenna poles approximately 87 feet in height and a one-story concrete block building approximately 11 feet by 10 feet in size, located on Pine Ridge in the Second Civil District of Roane County, Tenn., within the corporate limits of the city of Oak Ridge, on an access road approximately 0.7 miles E. of the intersection of the access road and road running between Bear Creek Road and the Oak Ridge Turnpike, said intersection being 0.6 mile N. of Bear Creek Road.

Water Storage Tanks K–1529 and K–1530

Two concrete water storage tanks located on Pine Ridge in the Second Civil District of Roane County, Tenn., within the corporate limits of the city of Oak Ridge, on an access road approximately 0.4 mile N. of the intersection of the access road and Bear Creek Road, said intersection being approximately 0.6 mile E. of the clinch River.

Area Changes From the Existing 229 Boundary

Building K–33 Area

The installation known as Building K–33 at the Oak Ridge Gaseous Diffusion Plant located in the Second Civil District, Roane County, Tenn., within the corporate limits of the city of Oak Ridge County, Tennessee, within

the Corporate limits of the City of Oak Ridge, on the N. side of the Oak Ridge Turnpike approximately 1 mile E. of Gallaher Bridge spanning the Clinch River.

The revised 229 Boundary around the K–33 Building is the outline perimeter of the main exterior walls of the structure. The 229 Boundary for this facility starts at the northwest building corner and encompasses 1456′ of the northern side, 970′ of the eastern side, 1456′ of the southern side, and 970′ of the western side. This area encompasses approximately 33 acres.

Main Oak Ridge Gaseous Diffusion Plant Areas

The Oak Ridge Gaseous Diffusion Plant Area is located in the Second Civil District of Roane County, Tennessee, within the corporate limits of the City of Oak Ridge on the N. side of the Oak Ridge Turnpike approximately 1 mile E. of Gallaher Bridge spanning the Clinch River. Said installation covers approximately 376 acres. The area is bounded at the northwest by Popular Creek, on the northeast and east by government land enclosed by a 7-foot chain link fence topped with three strands of barbed wire, on the south side by 5th St. East/Avenue D/10th St./Avenue J/7th St./5th St./Avenue L/7th St./Avenue M/5th St., and on the west side by Avenue S and Popular Creek.

Justification for Deletions

Raw Water Pumping Station K–901

Delete as it is a non-operational facility.

Raw Water Pumping Station—K–1513; Water Purification Plant—K–1515; Water Storage Tanks—K–1529 and K–1530

Delete as these facilities will be transferred to the City of Oak Ridge.

Pine Ridge Antenna Facility—K–805

Facility is currently leased to the Community Reuse Organization of East Tennessee (CROET).

FOR FURTHER INFORMATION CONTACT: Ms. Cindy B. Hunter, Certified Realty Specialist, DOE Oak Ridge Office, Post Office Box 2001, Oak Ridge, Tennessee 37831, *Telephone:* (865) 576–4431, *Facsimile*: (865) 576–9204.

SUPPLEMENTARY INFORMATION: This security boundary is designated pursuant to Section 229 of the Atomic Energy Act of 1954. This revised Boundary supersedes and/or re-describes the entire previously contained in the **Federal Register** notice published October 19, 1965 at 30 FR 13285; amended on March 30, 1967 at 32 FR 5384; and April 21, 1983 at 48 FR 17134.

Issued in Oak Ridge, Tennessee, on January 9, 2008.

Cindy B. Hunter,

DOE ORO Realty Officer.

[FR Doc. 08–237 Filed 1–22–08; 8:45 am]

BILLING CODE 6450–01–M

DEPARTMENT OF ENERGY

Reimbursement for Costs of Remedial Action at Active Uranium and Thorium Processing Sites

AGENCY: Department of Energy.

ACTION: Notice of the acceptance of Title X claims for reimbursement in fiscal year (FY) 2009.

SUMMARY: This Notice announces the Department of Energy (DOE) acceptance of claims in FY 2008 from eligible active uranium and thorium processing sites for reimbursement under Title X of the Energy Policy Act of 1992. For FY 2008, Congress has appropriated approximately $19.8 million for reimbursement of certain costs of remedial action at these sites. The approved amount of claims submitted during FY 2007 and unpaid approved balances for claims submitted in prior years will be paid by April 30, 2008, subject to the availability of funds. If the available funds are less than the total approved claims, these payments will be prorated, if necessary, based on the amount of available FY 2008 appropriations, unpaid approved claim balances (approximately $5.8 million), and claims received in May 2007 (approximately $26 million).

DATES: The closing date for the submission of claims in FY 2008 is May 1, 2008. These new claims will be processed for payment by April 30, 2009, together with unpaid approved claim balances from prior years, based on the availability of funds from congressional appropriations.

ADDRESSES: Claims should be forwarded by certified or registered mail, return receipt requested, to Mr. David Alan Hicks, Title X Program Manager, U.S. Department of Energy/EMCBC, @ Denver Federal Center, P.O. Box 25547, Denver, Colorado 80225–0547. Two copies of the claim should be included with each submission.

FOR FURTHER INFORMATION CONTACT: Contact David Mathes at (301) 903–7222 of the U.S. Department of Energy, Office of Environmental Management, Office of Disposal Operations.

SUPPLEMENTARY INFORMATION: DOE published a final rule under 10 CFR Part 765 in the **Federal Register** on May 23, 1994, (59 FR 26714) to carry out the requirements of Title X of the Energy Policy Act of 1992 (sections 1001–1004 of Pub. L 102–486, 42 U.S.C. 2296a *et seq.*) and to establish the procedures for eligible licensees to submit claims for reimbursement. DOE amended the final rule on June 3, 2003, (68 FR 32955) to adopt several technical and administrative amendments (e.g., statutory increases in the reimbursement ceilings). Title X requires DOE to reimburse eligible uranium and thorium licensees for certain costs of decontamination, decommissioning, reclamation, and other remedial action incurred by licensees at active uranium and thorium processing sites to remediate byproduct material generated as an incident of sales to the United States Government. To be reimbursable, costs of remedial action must be for work which is necessary to comply with applicable requirements of the Uranium Mill Tailings Radiation Control Act of 1978 (42 U.S.C. 7901 *et seq.*) or, where appropriate, with requirements established by a State pursuant to a discontinuance agreement under section 274 of the Atomic Energy Act of 1954 (42 U.S.C. 2021). Claims for reimbursement must be supported by reasonable documentation as determined by DOE in accordance with 10 CFR Part 765. Funds for reimbursement will be provided from the Uranium Enrichment Decontamination and Decommissioning Fund established at the Department of Treasury pursuant to section 1801 of the Atomic Energy Act of 1954 (42 U.S.C. 2297g). Payment or obligation of funds shall be subject to the requirements of the Anti-Deficiency Act (31 U.S.C. 1341).

Authority: Section 1001–1004 of Public Law 102–486, 106 Stat. 2776 (42 U.S.C. 2296a *et seq.*).

Issued in Washington, DC on this 14th of January, 2008.

David E. Mathes,

Office of Disposal Operations, Office of Regulatory Compliance.

[FR Doc. E8–1082 Filed 1–22–08; 8:45 am]

BILLING CODE 6450–01–P

DEPARTMENT OF ENERGY

Federal Energy Regulatory Commission

Notice of Meeting, Notice of Vote, Explanation of Action Closing Meeting and List of Persons To Attend

January 16, 2008.

The following notice of meeting is published pursuant to section 3(a) of the Government in the Sunshine Act (Pub. L. 94–409), 5 U.S.C. 552b:

Agency Holding Meeting: Federal Energy Regulatory Commission.

Date and Time: January 23, 2008, 10 a.m.

Place: Room 2C, Commission Meeting Room, 888 First Street, NE., Washington, DC 20426.

Status: Closed.

Matters To Be Considered: Non-Public, Investigations and Inquiries, Enforcement Related Matters.

Contact Person for More Information: Kimberly D. Bose, Secretary, Telephone (202) 502–8400.

Chairman Kelliher and Commissioners Kelly, Spitzer, Moeller, and Wellinghoff voted to hold a closed meeting on January 23, 2008. The certification of the General Counsel explaining the action closing the meeting is available for public inspection in the Commission's Public Reference Room at 888 First Street, NE., Washington, DC 20426.

The Chairman and the Commissioners, their assistants, the Commission's Secretary, the General Counsel and members of her staff, and a stenographer are expected to attend the meeting. Other staff members from the Commission's program offices who will advise the Commissioners in the matters discussed will also be present.

Kimberly D. Bose,

Secretary.

[FR Doc. E8–1030 Filed 1–22–08; 8:45 am]

BILLING CODE 6717–01–P

ENVIRONMENTAL PROTECTION AGENCY

[EPA–HQ–OECA–2007–0127; FRL–8518–5]

Agency Information Collection Activities; Submission to OMB for Review and Approval; Comment Request; NESHAP for Primary Aluminum Reduction Plants (Renewal); EPA ICR Number 1767.05, OMB Control Number 2060–0360

AGENCY: Environmental Protection Agency (EPA).

ACTION: Notice.

SUMMARY: In compliance with the Paperwork Reduction Act (44 U.S.C. 3501 *et seq.*), this document announces that an Information Collection Request (ICR) has been forwarded to the Office of Management and Budget (OMB) for review and approval. This is a request to renew an existing approved collection. The ICR which is abstracted below describes the nature of the collection and the estimated burden and cost.

DATES: Additional comments may be submitted on or before February 22, 2008.

ADDRESSES: Submit your comments, referencing docket ID number EPA–HQ–OECA–2007–0127, to (1) EPA online using *http://www.regulations.gov* (our preferred method), or by e-mail to *docket.oeca@epa.gov,* or by mail to: EPA Docket Center (EPA/DC), Environmental Protection Agency, Enforcement and Compliance Docket and Information Center, mail code 2201T, 1200 Pennsylvania Avenue, NW., Washington, DC 20460, and (2) OMB at: Office of Information and Regulatory Affairs, Office of Management and Budget (OMB), Attention: Desk Officer for EPA, 725 17th Street, NW., Washington, DC 20503.

FOR FURTHER INFORMATION CONTACT: María Malavé, Compliance Assessment and Media Programs Division (Mail Code 2223A), Office of Compliance, Environmental Protection Agency, 1200 Pennsylvania Avenue, NW., Washington, DC 20460; telephone number: (202) 564–7027; fax number: (202) 564–0050; e-mail address: *malave.maria@epa.gov.*

SUPPLEMENTARY INFORMATION: EPA has submitted the following ICR to OMB for review and approval according to the procedures prescribed in 5 CFR 1320.12. On March 9, 2007 (72 FR 10735), EPA sought comments on this ICR pursuant to 5 CFR 1320.8(d). EPA received no comments. Any additional comments on this ICR should be submitted to EPA and OMB within 30 days of this notice.

EPA has established a public docket for this ICR under docket ID number EPA–OECA–2007–0127, which is available for public viewing online at *http://www.regulations.gov,* or in person viewing at the Enforcement and Compliance Docket and Information Center in the EPA Docket Center (EPA/DC), EPA West, Room 3334, 1301 Constitution Avenue, NW., Washington, DC. The EPA Docket Center Public Reading Room is open from 8:30 a.m. to 4:30 p.m., Monday through Friday, excluding legal holidays. The telephone number for the Reading Room is (202) 566–1744, and the telephone number for the Enforcement and Compliance Docket is (202) 566–1752.

Use EPA's electronic docket and comment system at *http://www.regulations.gov,* to submit or view public comments, access the index listing of the contents of the docket, and to access those documents in the docket that are available electronically. Once in the system, select ''docket search,'' then key in the docket ID number identified above. Please note that EPA's policy is that public comments, whether submitted electronically or in paper, will be made available for public viewing at *http://www.regulations.gov,* as EPA receives them and without change, unless the comment contains copyrighted material, Confidential Business Information (CBI), or other information whose public disclosure is restricted by statute. For further information about the electronic docket, go to *http://www.regulations.gov.*

Title: NESHAP for Primary Aluminum Reduction Plants (Renewal)

ICR Numbers: EPA ICR Number 1767.05, OMB Control Number 2060–0360

ICR Status: This ICR is scheduled to expire on February 29, 2008. Under OMB regulations, the Agency may continue to conduct or sponsor the collection of information while this submission is pending at OMB. An Agency may not conduct or sponsor, and a person is not required to respond to, a collection of information unless it displays a currently valid OMB control number. The OMB control numbers for EPA's regulations in title 40 of the CFR, after appearing in the **Federal Register** when approved, are listed in 40 CFR part 9, and displayed either by publication in the **Federal Register** or by other appropriate means, such as on the related collection instrument or form, if applicable. The display of OMB control numbers in certain EPA regulations is consolidated in 40 CFR part 9.

Abstract: The National Emission Standards for Hazardous Air Pollutants (NESHAP), for the regulations published at 40 CFR part 63, subpart LL, were proposed on September 26, 1996 and promulgated on October 7, 1997. These standards apply to the owners or operators of new or existing potlines, paste production plants, or anode bake furnaces associated with primary aluminum production and located at a major source, and for each new pitch storage tank associated with a primary aluminum reduction plant that is a major source of hazardous air pollutants (HAP) emissions.

In general, all NESHAP standards require initial notifications, performance tests, and periodic reports. Owners or operators are also required to maintain records of the occurrence and duration of any startup, shutdown, or malfunction in the operation of an affected facility, or any period during which the monitoring system is inoperative. These notifications, reports, and records are essential in determining compliance, and are required of all sources subject to NESHAP.

Any owner or operator subject to the provisions of this part shall maintain a file of these measurements, and retain the file for at least five years following the date of such measurements, maintenance reports, and records. All reports are sent to the delegated state or local authority. In the event that there is no such delegated authority, the reports are sent directly to the United States Environmental Protection Agency (EPA) regional office.

Burden Statement: The annual public reporting and recordkeeping burden for this collection of information is estimated to average 2,001 (rounded) hours per response. Burden means the total time, effort, or financial resources expended by persons to generate, maintain, retain, or disclose or provide information to or for a Federal agency. This includes the time needed to review instructions; develop, acquire, install, and utilize technology and systems for the purposes of collecting, validating, and verifying information, processing and maintaining information, and disclosing and providing information; adjust the existing ways to comply with any previously applicable instructions and requirements which have subsequently changed; train personnel to be able to respond to a collection of information; search data sources; complete and review the collection of information; and transmit or otherwise disclose the information.

Respondents/Affected Entities: Owners or operators of primary aluminum reduction plants that are major sources of HAP emissions.

Estimated Number of Respondents: 16.

Frequency of Response: Initially, quarterly, semiannually, and on occasion.

Estimated Total Annual Hour Burden: 80,046 hours.

Estimated Total Annual Costs: $7,221,357, which includes $0 annualized capital/startup costs, $91,348 annualized Operating and Maintenance (O&M) costs, and $7,130,009 annualized labor costs.

Changes in the Estimates: The decrease in burden to industry from the most recently approved ICR is due to a decrease in the number of existing primary aluminum reduction plants that are subject to NESHAP subpart LL. The number of facilities in this renewal are less than in the previous ICR due to a more accurate estimate of the number of facilities and the closure of a number of facilities. The closures were caused by economic factors such as the cost of energy. The reduction in the number of respondents to this ICR also resulted in a decrease on the average annual cost for capital/startup and operation and maintenance costs to industry over the next three years of the ICR.

Dated: January 15, 2008.

Sara Hisel-McCoy,

Director, Collection Strategies Division.

[FR Doc. E8–1094 Filed 1–22–08; 8:45 am]

BILLING CODE 6560–50–P

ENVIRONMENTAL PROTECTION AGENCY

[FRL–8518–4]

Agency Information Collection Activities OMB Responses

AGENCY: Environmental Protection Agency (EPA).

ACTION: Notice.

SUMMARY: This document announces the Office of Management and Budget's (OMB) responses to Agency Clearance requests, in compliance with the Paperwork Reduction Act (44 U.S.C. 3501 *et seq.*). An agency may not conduct or sponsor, and a person is not required to respond to, a collection of information unless it displays a currently valid OMB control number. The OMB control numbers for EPA's regulations are listed in 40 CFR part 9 and 48 CFR chapter 15.

FOR FURTHER INFORMATION CONTACT: Rick Westlund (202) 566–1682, or e-mail at *westlund.rick@epa.gov* and please refer to the appropriate EPA Information Collection Request (ICR) Number.

SUPPLEMENTARY INFORMATION:

OMB Responses to Agency Clearance Requests

OMB Approvals

EPA ICR Number 1975.04; NESHAP for Stationary Reciprocating Internal Combustion Engines (Renewal); in 40 CFR part 63, subpart ZZZZ; was approved 12/07/2007; OMB Number 2060–0548; expires 12/31/2008.

EPA ICR Number 1176.08; NSPS for New Residential Wood Heaters (Renewal); in 40 CFR part 60, subpart AAA; was approved 12/28/2007; OMB Number 2060–0161; expires 12/31/2010.

EPA ICR Number 0234.09; Performance Evaluation Studies on Water and Wastewater Laboratories (Renewal); was approved 12/31/2007; OMB Number 2080–0021; expires 12/31/2010.

EPA ICR Number 2264.01; NSPS for New Residential Wood Heaters (Renewal); was approved 12/31/2007; OMB Number 2040–0276; expires 12/31/2008.

EPA ICR Number 1078.08; NSPS for Phosphate Rock Plants (Renewal); in 40 CFR part 60, subpart NN; was approved 01/10/2008; OMB Number 2060–0111; expires 01/31/2011.

EPA ICR Number 1158.09; NSPS for Rubber Tire Manufacturing (Renewal); in 40 CFR part 60, subpart BBB; was approved 01/10/2008; OMB Number 2060–0156; expires 01/31/2011.

EPA ICR Number 1693.05; Plant-Incorporated Protectants; CBI Substantiation and Adverse Effects Reporting (Renewal); in 40 CFR 174.9 and 174.71; was approved 01/11/2008; OMB Number 2070–0142; expires 01/31/2011.

EPA ICR Number 1643.06; Application Requirements for the Approval and Delegation of Federal Air Toxics Programs to State, Territorial, Local, and Tribal Agencies (Renewal); in 40 CFR part 63, subpart E; was approved 01/11/2008; OMB Number 2060–0264; expires 01/31/2011.

Comment Filed

EPA ICR Number 2274.01; NESHAP for Clay Ceramics Manufacturing, Glass Manufacturing and Secondary Nonferrous Metals Processing Area Sources (Proposed Rule); OMB filed comments on 12/13/2007.

EPA ICR Number 2268.01; NESHAP for Paint Stripping and Miscellaneous Surface Coating at Area Sources (Proposed Rule); OMB filed comments on 12/13/2007.

EPA ICR Number 2277.01; NESHAP for Area Sources: Electric Arc Furnace Steelmaking Facilities (Proposed Rule); OMB filed comments on 12/14/2007.

EPA ICR Number 1587.08; Federal Operating Permit Regulations (40 CFR part 70) (Proposed Rule for Flexible Air Permits); OMB filed comments on 12/28/2007.

EPA ICR Number 1230.20; Prevention of Significant Deterioration and Non-Attainment New Source Review (40 CFR parts 51 and 52) (Proposed Rule for Flexible Air Permits); OMB filed comments on 12/28/2007.

EPA ICR Number 1713.07; Federal Operating Permit Regulations (40 CFR part 71) (Proposed Rule for Flexible Air Permits); OMB filed comments on 12/28/2007.

Discontinued

EPA ICR Number 2028.01; OMB Number 2060–0551; NESHAP for Industrial, Commercial, and Institutional Boilers and Process Heaters (40 CFR part 63, subpart DDDDD) was discontinued by the Agency on 12/31/2007.

Dated: January 15, 2008.

Sara Hisel-McCoy,

Director, Collection Strategies Division.

[FR Doc. E8–1095 Filed 1–22–08; 8:45 am]

BILLING CODE 6560–50–P

ENVIRONMENTAL PROTECTION AGENCY

[EPA–HQ–OAR–2007–0904; FRL–8518–7]

Agency Information Collection Activities; Submission to OMB for Review and Approval; Comment Request; Emissions Certification and Compliance Requirements for Marine Spark-Ignition Engines (Renewal); EPA ICR No. 1722.05, OMB Control No. 2060–0321

AGENCY: Environmental Protection Agency.

ACTION: Notice.

SUMMARY: In compliance with the Paperwork Reduction Act (PRA) (44 U.S.C. 3501 *et seq.*), this document announces that an Information Collection Request (ICR) has been forwarded to the Office of Management and Budget (OMB) for review and approval. This is a request to renew an existing approved collection. The ICR, which is abstracted below, describes the nature of the information collection and its estimated burden and cost.

DATES: Additional comments may be submitted on or before February 22, 2008.

ADDRESSES: Submit your comments, referencing Docket ID No. EPA–HQ–OAR–2007–0904, to (1) EPA online using *http://www.regulations.gov* (our preferred method), by e-mail to *a-and-r-Docket@epa.gov,* or by mail to: EPA Docket Center, Environmental Protection Agency, Air Docket, Environmental Protection Agency, Mailcode: 2822T, 1200 Pennsylvania Ave., NW., Washington, DC 20460, and (2) OMB by mail to: Office of Information and Regulatory Affairs, Office of Management and Budget (OMB), Attention: Desk Officer for EPA, 725 17th Street, NW., Washington, DC 20503.

FOR FURTHER INFORMATION CONTACT: Nydia Yanira Reyes-Morales, Environmental Protection Agency, 1200 Pennsylvania Avenue NW., Mail Code 6403J, Washington, DC 20460; telephone number: 202–343–9264; fax number: 202–343–2804; e-mail address: *reyes-morales.nydia@epa.gov.*

SUPPLEMENTARY INFORMATION: EPA has submitted the following ICR to OMB for review and approval according to the procedures prescribed in 5 CFR 1320.12. On September 26, 2007 (72 FR 54654), EPA sought comments on this ICR pursuant to 5 CFR 1320.8(d). EPA received no comments. Any additional comments on this ICR should be submitted to EPA and OMB within 30 days of this notice.

EPA has established a public docket for this ICR under Docket ID No. EPA–HQ–OAR–2007–0904, which is available for online viewing at *http://www.regulations.gov,* or in person viewing at the Air Docket in the EPA Docket Center (EPA/DC), EPA West, Room 3334, 1301 Constitution Ave., NW., Washington, DC. The EPA/DC Public Reading Room is open from 8:30 a.m. to 4:30 p.m., Monday through Friday, excluding legal holidays. The telephone number for the Reading Room is 202–566–1744, and the telephone number for the Air Docket is 202–566–1742.

Use EPA's electronic docket and comment system at *http://www.regulations.gov,* to submit or view public comments, access the index listing of the contents of the docket, and to access those documents in the docket that are available electronically. Once in the system, select ''docket search,'' then key in the docket ID number identified above. Please note that EPA's policy is that public comments, whether submitted electronically or in paper, will be made available for public viewing at *http://www.regulations.gov* as EPA receives them and without change, unless the comment contains copyrighted material, confidential business information (CBI), or other information whose public disclosure is restricted by statute. For further information about the electronic docket, go to *http://www.regulations.gov.*

Title: Emissions Certification and Compliance Requirements for Marine Spark-ignition Engines (Renewal).

ICR numbers: EPA ICR No. 1722.05, OMB Control No. 2060–0321.

ICR Status: This ICR is scheduled to expire on January 31, 2008. Under OMB regulations, the Agency may continue to conduct or sponsor the collection of information while this submission is pending at OMB. An Agency may not conduct or sponsor, and a person is not required to respond to, a collection of information, unless it displays a currently valid OMB control number. The OMB control numbers for EPA's regulations in title 40 of the CFR, after appearing in the **Federal Register** when approved, are listed in 40 CFR part 9, are displayed either by publication in the **Federal Register** or by other appropriate means, such as on the related collection instrument or form, if applicable. The display of OMB control numbers in certain EPA regulations is consolidated in 40 CFR Part 9.

Abstract: Under Title II of the Clean Air Act (42 U.S.C. 7521 *et seq.*; CAA), EPA is charged with issuing certificates of conformity for certain spark-ignition (SI) engines used to propel marine vessels that comply with applicable emission standards. Such a certificate must be issued before engines may be legally introduced into commerce. To apply for a certificate of conformity, manufacturers are required to submit descriptions of their planned production line, including descriptions of the emission control system, and engine emission test data. This information is organized by ''engine family.'' An engine family is a group of engines expected to have similar emission characteristics. There are also record-keeping requirements. Under the regulations governing marine SI engines, manufacturers must use the Averaging, Banking, and Trading Program (ABT) and must submit information regarding the calculation, actual generation, and usage of emission credits in a certification application, an end-of-the-year report, and final report. These reports are used for certification and enforcement purposes. The Act also mandates EPA to verify that manufacturers have successfully translated their certified prototype engines into mass produced engines, and that these engines comply with emission standards throughout their useful lives. Under the Production-Line Testing (PLT) Program, manufacturers are required to test a sample of engines as they leave the assembly line. This self-audit program increases efficiency and reduces the cost of correcting misbuilds and other errors made in the assembly line. Under the In-use Testing Program (In-use), manufacturers are required to test engines after a number of years of use to verify that they comply with emission standards throughout their useful lives.

Burden Statement: The annual public reporting and recordkeeping burden for this collection of information is estimated to average 154 hours per response. Burden means the total time, effort, or financial resources expended by persons to generate, maintain, retain, or disclose or provide information to or

for a Federal agency. This includes the time needed to review instructions; develop, acquire, install, and utilize technology and systems for the purposes of collecting, validating, and verifying information, processing and maintaining information, and disclosing and providing information; adjust the existing ways to comply with any previously applicable instructions and requirements which have subsequently changed; train personnel to be able to respond to a collection of information; search data sources; complete and review the collection of information; and transmit or otherwise disclose the information.

Respondents/Affected Entities: Entities potentially affected by these actions are manufacturers of marine spark-ignition engines.

Estimated Number of Respondents: 12.

Frequency of Response: Annual, quarterly, and on occasion.

Estimated Total Annual Hour Burden: 26,546.

Estimated Total Annual Cost: $1,608,844, includes $219,223 annualized capital or O&M costs.

Changes in the Estimates: There is a decrease of 13,747 hours in the total estimated burden currently identified in the OMB Inventory of Approved ICR Burdens. This decrease is due to an adjustment in the total estimated number of responses. Under the previous ICR, manufacturers could request a waiver from most compliance requirements (PLT, In-use, etc.) for engine families with technology that was already in existence as of 1997 if they agreed to completely phase these families out by 2005. Since the phase out date already passed, manufacturers are no longer producing those engine families.

Dated: January 16, 2008.

Sara Hisel-McCoy,

Director, Collection Strategies Division.

[FR Doc. E8–1096 Filed 1–22–08; 8:45 am]

BILLING CODE 6560–50–P

ENVIRONMENTAL PROTECTION AGENCY

[EPA–HQ–OECA–2007–0051; FRL–8518–8]

Agency Information Collection Activities; Submission to OMB for Review and Approval; Comment Request; NSPS for Asphalt Processing and Roofing Manufacture (Renewal); EPA ICR Number 0661.09 OMB Control Number 2060–0002

AGENCY: Environmental Protection Agency.

ACTION: Notice.

SUMMARY: In compliance with the Paperwork Reduction Act (44 U.S.C. 3501 *et seq.*), this document announces that an Information Collection Request (ICR) has been forwarded to the Office of Management and Budget (OMB) for review and approval. This is a request to renew an existing approved collection. The ICR which is abstracted below describes the nature of the collection and the estimated burden and cost.

DATES: Additional comments may be submitted on or before February 22, 2008.

ADDRESSES: Submit your comments, referencing docket ID number EPA–HQ–OECA–2007–0051, to (1) EPA online using *www.regulations.gov* (our preferred method), or by e-mail to *docket.oeca@epa.gov,* or by mail to: EPA Docket Center (EPA/DC), Environmental Protection Agency, Enforcement and Compliance Docket and Information Center, mail code 2201T, 1200 Pennsylvania Avenue, NW., Washington, DC 20460, and (2) OMB at: Office of Information and Regulatory Affairs, Office of Management and Budget (OMB), Attention: Desk Officer for EPA, 725 17th Street, NW., Washington, DC 20503.

FOR FURTHER INFORMATION CONTACT: Learia Williams, Compliance Assessment and Media Programs Division, Office of Compliance, Mail Code 2223A, Environmental Protection Agency, 1200 Pennsylvania Avenue, NW., Washington, DC 20460; telephone number: (202) 564–4113; fax number: (202) 564–0050; e-mail address: *williams.learia@epa.gov.*

SUPPLEMENTARY INFORMATION: EPA has submitted the following ICR to OMB for review and approval according to the procedures prescribed in 5 CFR 1320.12. On March 9, 2007 (72 FR 10735), EPA sought comments on this ICR pursuant to 5 CFR 1320.8(d). EPA received no comments. Any additional comments on this ICR should be submitted to EPA and OMB within 30 days of this notice.

EPA has established a public docket for this ICR under docket ID number EPA–HQ–OECA–2007–0051 which is available for public viewing online at *http://www.regulations.gov,* or in person viewing at the Enforcement and Compliance Docket in the EPA Docket Center (EPA/DC), EPA West, Room 3334, 1301 Constitution Avenue, NW., Washington, DC. The EPA Docket Center Public Reading Room is open from 8:30 a.m. to 4:30 p.m., Monday through Friday, excluding legal holidays. The telephone number for the Reading Room is (202) 566–1744, and the telephone number for the Enforcement and Compliance Docket is (202) 566–1752.

Use EPA's electronic docket and comment system at *http://www.regulations.gov,* to submit or view public comments, access the index listing of the contents of the docket, and to access those documents in the docket that are available electronically. Once in the system, select ''docket search,'' then key in the docket ID number identified above. Please note that EPA's policy is that public comments, whether submitted electronically or in paper, will be made available for public viewing at *http://www.regulations.gov* as EPA receives them and without change, unless the comment contains copyrighted material, Confidential Business Information (CBI), or other information whose public disclosure is restricted by statute. For further information about the electronic docket, go to *www.regulations.gov.*

Title: NSPS for Asphalt Processing and Roofing Manufacture (Renewal).

ICR Numbers: EPA ICR Number 0661.09, OMB Control Number 2060–0002.

ICR Status: This ICR is scheduled to expire on January 31, 2008. Under OMB regulations, the Agency may continue to conduct or sponsor the collection of information while this submission is pending at OMB. An Agency may not conduct or sponsor, and a person is not required to respond to, a collection of information unless it displays a currently valid OMB control number. The OMB control numbers for EPA's regulations in title 40 of the CFR, after appearing in the **Federal Register** when approved, are listed in 40 CFR part 9, and displayed either by publication in the **Federal Register** or by other appropriate means, such as on the related collection instrument or form, if applicable. The display of OMB control numbers in certain EPA regulations is consolidated in 40 CFR part 9.

Abstract: The New Source Performance Standards (NSPS) for Asphalt Processing and Roofing Manufacture (40 CFR part 60, subpart UU), were proposed on November 18, 1980 and promulgated on May 26, 1981. These standards apply to each saturator and each asphalt storage facility at asphalt roofing plants; and to each asphalt storage tank and each blowing still at asphalt processing plants, petroleum refineries, and asphalt roofing plants. New facilities include those that commenced construction, modification or reconstruction after the date of proposal. This information will then be used by enforcement agencies to

verify that sources subject to the standard are meeting the emission reductions mandated by the Clean Air Act.

Owners/operators of asphalt processing and roofing manufacture are required to submit one-time only notification of construction/reconstruction, actual startup, initial performance test, physical or operational changes, and demonstration of a continuous monitoring system. Records must be maintained of the occurrence and duration of any startup, shutdown, or malfunction in the operation of an affected facility, or any period during which the monitoring system is inoperative. These notifications reports, and records are essential in determining compliance; and are required, in general, of all sources subject to NSPS.

Any owner or operator subject to the provisions of this part shall maintain a file of these measurements, and retain the file for at least two years following the date of such measurements, maintenance reports, and records. All reports are sent to the delegated state or local authority. In the event that there is no such delegated authority, the reports are sent directly to the EPA regional office. This information is being collected to assure compliance with 40 CFR part 60, subpart UU, as authorized in section 112 and 114(a) of the Clean Air Act. The required information consists of emissions data and other information that have been determined to be private.

An Agency may not conduct or sponsor, and a person is not required to respond to, a collection of information unless it displays a currently valid OMB Control Number. The OMB Control Number for EPA's regulations are listed in 40 CFR part 9 and 48 CFR chapter 15, and are identified on the form and/or instrument, if applicable.

Burden Statement: The annual public reporting and recordkeeping burden for this collection of information is estimated to average 113 hours per response. Burden means the total time, effort, or financial resources expended by persons to generate, maintain, retain, or disclose or provide information to or for a Federal agency. This includes the time needed to review instructions; develop, acquire, install, and utilize technology and systems for the purposes of collecting, validating, and verifying information, processing and maintaining information, and disclosing and providing information; adjust the existing ways to comply with any previously applicable instructions and requirements which have subsequently changed; train personnel to be able to respond to a collection of information; search data sources; complete and review the collection of information; and transmit or otherwise disclose the information.

Respondents/Affected Entities: Asphalt processing and roofing manufacture.

Estimated Number of Respondents: 144.

Frequency of Response: Initially, and semiannually.

Estimated Total Annual Hour Burden: 33,912.

Estimated Total Annual Cost: $8,714,925, which includes $200,000 annualized Capital Startup costs, $5,040,000 annualized Operating and Maintenance (O&M) costs, and $3,474,925 annualized Labor costs.

Changes in the Estimates: There is an adjustment increase in the total estimated burden hours as currently identified in the OMB inventory of burdens because the previous tables did not represent all of the reporting requirements. The decrease in the number of sources was caused by buy-outs and/or consolidation which the industry has been experiencing for the last several years. The decrease in the capital startup and O&M costs estimates as compared with the previous ICR is attributed solely to the decrease in the number of sources. This ICR corrects the deficiencies.

Dated: January 16, 2008.

Sara Hisel-McCoy,

Director Collection Strategies Division.

[FR Doc. E8–1097 Filed 1–22–08; 8:45 am]

BILLING CODE 6560–50–P

ENVIRONMENTAL PROTECTION AGENCY

[EPA–HQ–OW–2003–0078, FRL–8519–3]

Agency Information Collection Activity; Proposed Collection; Comment Request; National Wastewater Operator Training and Technical Assistance Program (Renewal), EPA ICR Number 1977.03, OMB Control Number 2040–0238

AGENCY: Environmental Protection Agency (EPA).

ACTION: Notice.

SUMMARY: In compliance with the Paperwork Reduction Act (PRA) (44 U.S.C. 3501 *et seq.*), this document announces that EPA is planning to submit a request to renew an existing approved Information Collection Request (ICR) to the Office of Management and Budget (OMB). Before submitting the ICR to OMB for review and approval, EPA is soliciting comments on specific aspects of the proposed information collection as described below.

DATES: Comments must be submitted on or before March 24, 2008.

ADDRESSES: Submit your comments, referencing docket ID number EPA–HQ–OW–2003–0078, by one of the following methods:

- *www.regulations.gov:* Follow the online instructions for submitting comments.
- E-mail: *ow-docket@epa.gov* (Identify Docket ID number EPA–HQ–OW–2003–0078, in the subject line)
- Mail: Water Docket, Environmental Protection Agency, Mailcode: 2822T, 1200 Pennsylvania Ave., NW., Washington, DC 20460.
- Hand Delivery: EPA Docket Center, EPA West, Room 3334, 1301 Constitution Avenue, NW., Washington, DC. Such deliveries are only accepted during the Docket's normal hours of operation, and special arrangements should be made for deliveries of boxed information.

Instructions: Direct your comments identified by the Docket ID number EPA–HQ–OW–2003–0078. EPA's policy is that all comments received will be included in the public docket without change and may be made available online at *www.regulations.gov,* including any personal information provided, unless the comment includes information claimed to be Confidential Business Information (CBI) or other information whose disclosure is restricted by statute. Do not submit information that you consider to be CBI or otherwise protected through *www.regulations.gov* or e-mail. The *www.regulations.gov* Web site is an ''anonymous access'' system, which means EPA will not know your identity or contact information unless you provide it in the body of your comment. If you send an e-mail comment directly to EPA without going through *www.regulations.gov,* your e-mail address will be automatically captured and included as part of the comment that is placed in the public docket and made available on the Internet. If you submit an electronic comment, EPA recommends that you include your name and other contact information in the body of your comment and with any disk or CD–ROM you submit. If EPA cannot read your comment due to technical difficulties and cannot contact you for clarification, EPA may not be able to consider your comment. Electronic files should avoid the use of special characters, any form of encryption, and be free of any defects or

viruses. For additional information about EPA's public docket, visit the EPA Docket Center homepage at *http://www.epa.gov/epahome/dockets.htm.*

FOR FURTHER INFORMATION CONTACT: Gajindar Singh, Municipal Support Division, Office of Wastewater Management, OWM Mail Code: 4204M, Environmental Protection Agency, 1200 Pennsylvania Ave., NW., Washington, DC 20460; telephone number: (202) 564–0634; e-mail address: *singh.gajindar@epa.gov.*

SUPPLEMENTARY INFORMATION:

How Can I Access the Docket and/or Submit Comments?

EPA has established a public docket for the ICR identified in this document (ID number EPA–HQ–OW–2003–0078), which is available for online viewing at *www.regulations.gov,* or in person viewing at the Water Docket in the EPA Docket Center (EPA/DC), EPA West, Room 3334, 1301 Constitution Ave., NW., Washington, DC. The EPA/ DC Public Reading Room is open from 8:30 a.m. to 4:30 p.m., Monday through Friday, excluding legal holidays. The telephone number for the Reading Room is 202–566–1744, and the telephone number for the Water Docket is 202–566–2426.

Use *www.regulations.gov* to obtain a copy of the draft collection of information, submit or view public comments, access the index listing of the contents of the docket, and to access those documents in the public docket that are available electronically. Once in the system, select ''search,'' then key in the docket ID number identified in this document.

What Information Is EPA Particularly Interested in?

Pursuant to section 3506(c)(2)(A) of the PRA, EPA specifically solicits comments and information to enable it to:

(i) Evaluate whether the proposed collection of information is necessary for the proper performance of the functions of the Agency, including whether the information will have practical utility;

(ii) Evaluate the accuracy of the Agency's estimate of the burden of the proposed collection of information, including the validity of the methodology and assumptions used;

(iii) Enhance the quality, utility, and clarity of the information to be collected; and

(iv) Minimize the burden of the collection of information on those who are to respond, including through the use of appropriate automated electronic, mechanical, or other technological collection techniques or other forms of information technology, e.g., permitting electronic submission of responses. In particular, EPA is requesting comments from very small businesses (those that employ less than 25) on examples of specific additional efforts that EPA could make to reduce the paperwork burden for very small businesses affected by this collection.

What Should I Consider When I Prepare My Comments for EPA?

You may find the following suggestions helpful for preparing your comments:

1. Explain your views as clearly as possible and provide specific examples.
2. Describe any assumptions that you used.
3. Provide copies of technical information/data you used that support your views.
4. If you estimate potential burden or costs, explain how you arrived at the estimate that you provide.
5. Offer alternative ways to improve the collection activity.
6. Make sure to submit your comments by the deadline identified under **DATES**.
7. To ensure proper receipt by EPA, be sure to identify the docket ID number assigned to this action in the subject line on the first page of your response. You may also provide the name, date, and **Federal Register** citation.

What Information Collection Activity or ICR Does This Apply to?

Affected entities: Entities potentially affected by this action are state and local governments, state and county colleges, and organizations that provide training assistance through the Clean Water Act 104(g)(1) Program to municipal wastewater treatment plants.

Title: National Wastewater Operator Training and Technical Assistance Program (Renewal).

ICR numbers: EPA ICR No. 1977.03, OMB Control No. 2040–0238.

ICR status: The current ICR expires on June 30, 2008. An Agency may not conduct or sponsor, and a person is not required to respond to, a collection of information, unless it displays a currently valid OMB control number. The OMB control numbers for EPA's regulations in title 40 of the CFR, after appearing in the **Federal Register** when approved, are listed in 40 CFR part 9, and displayed either by publication in the **Federal Register** or by other appropriate means, such as on the related collection instrument or form, if applicable. The display of OMB control numbers in certain EPA regulations is consolidated in 40 CFR part 9.

Abstract: The Wastewater Operator Training Program provides on-site technical assistance to municipal wastewater treatment plants. Information will be collected from the network of forty-six states or the 104(g)(1) training centers set up through out the United States. The information will be collected to identify the facilities assisted, the different types of assistance the program provides and the environmental outcomes and benefits of the assistance provided by the program. The information will be collected and submitted on either an annual or semi-annual basis. A Microsoft Access database and an Excel spreadsheet have been developed for this purpose. This ICR will be used by EPA for the technical and financial management of the 104(g)(1) Program. The 104(g)(1) Program training centers participate in the information collection in compliance with the grant conditions. All information in the data system will be made public upon request.

Burden Statement: The total number of respondents is estimated to be 46 including the states and the training centers. The annual public reporting and recordkeeping burden for this collection of information is estimated to be seven hours per respondent for 46 respondents with a total burden of 322 hours at an annual cost of $14,361(assuming an average hourly salary of $44.60). All forty-six (46) training centers and EPA have the necessary equipment, desk-top computers and software, to collect and manage this information. There will be no additional start-up or maintenance costs associated with this project to perform this information collection request. Burden means the total time, effort, or financial resources expended by persons to generate, maintain, or disclose or provide information to or for a Federal agency. This includes the time needed to review instructions; develop, acquire, install, and use technology and systems for the purposes of collecting, validating, and verifying information, processing and maintaining information, and disclosing and providing information; adjust the existing ways to comply with any previously applicable instructions and requirements; train personnel to be able to respond to a collection of information; search data sources; complete and review the collection of information; and transmit or otherwise disclose information. The ICR provides a detailed explanation of the Agency's estimate, which is only briefly summarized here:

Estimated total number of potential respondents: 46.

Frequency of response: Three times a year.

Estimated total average number of responses for each respondent: Three.

Estimated total annual burden hours: 322 hours.

Estimated total annual costs: $14,361. This includes an estimated reporting burden cost of $14,361 and an estimated cost of $0 for capital investment or maintenance and operational costs.

Changes in the Estimates: There is no change in the total estimated respondent burden hours compared with that identified in the ICR currently approved by OMB. EPA has not modified the requirements that were included in the previous ICR.

Dated: January 8, 2008.

James A. Hanlon,

Director, Office of Wastewater Management.

[FR Doc. E8–1100 Filed 1–22–08; 8:45 am]

BILLING CODE 6560–50–P

ENVIRONMENTAL PROTECTION AGENCY

[EPA–HQ–OPPT–2007–1193; FRL–8348–9]

Certain New Chemicals; Receipt and Status Information

AGENCY: Environmental Protection Agency (EPA).

ACTION: Notice.

SUMMARY: Section 5 of the Toxic Substances Control Act (TSCA) requires any person who intends to manufacture (defined by statute to include import) a new chemical (i.e., a chemical not on the TSCA Inventory) to notify EPA and comply with the statutory provisions pertaining to the manufacture of new chemicals. Under sections 5(d)(2) and 5(d)(3) of TSCA, EPA is required to publish a notice of receipt of a premanufacture notice (PMN) or an application for a test marketing exemption (TME), and to publish periodic status reports on the chemicals under review and the receipt of notices of commencement to manufacture those chemicals. This status report, which covers the period from October 2, 2007 through November 30, 2007, consists of the PMNs and TMEs, both pending or expired, and the notices of commencement to manufacture a new chemical that the Agency has received under TSCA section 5 during this time period.

DATES: Comments identified by the specific PMN number or TME number, must be received on or before February 22, 2008.

ADDRESSES: Submit your comments, identified by docket identification (ID) number EPA–HQ–OPPT–2007–1193, by one of the following methods:

• *Federal eRulemaking Portal*: *http://www.regulations.gov*. Follow the on-line instructions for submitting comments.

• *Mail*: Document Control Office (7407M), Office of Pollution Prevention and Toxics (OPPT), Environmental Protection Agency, 1200 Pennsylvania Ave., NW., Washington, DC 20460–0001.

• *Hand Delivery*: OPPT Document Control Office (DCO), EPA East Bldg., Rm. 6428, 1201 Constitution Ave., NW., Washington, DC. Attention: Docket ID Number EPA–HQ–OPPT–2007–1193. The DCO is open from 8 a.m. to 4 p.m., Monday through Friday, excluding legal holidays. The telephone number for the DCO is (202) 564–8930. Such deliveries are only accepted during the DCO's normal hours of operation, and special arrangements should be made for deliveries of boxed information.

Instructions: Direct your comments to docket ID number EPA–HQ–OPPT–2007–1193. EPA's policy is that all comments received will be included in the docket without change and may be made available on-line at *http://www.regulations.gov*, including any personal information provided, unless the comment includes information claimed to be Confidential Business Information (CBI) or other information whose disclosure is restricted by statute. Do not submit information that you consider to be CBI or otherwise protected through regulations.gov or e-mail. The regulations.gov website is an ''anonymous access'' system, which means EPA will not know your identity or contact information unless you provide it in the body of your comment. If you send an e-mail comment directly to EPA without going through regulations.gov, your e-mail address will be automatically captured and included as part of the comment that is placed in the docket and made available on the Internet. If you submit an electronic comment, EPA recommends that you include your name and other contact information in the body of your comment and with any disk or CD-ROM you submit. If EPA cannot read your comment due to technical difficulties and cannot contact you for clarification, EPA may not be able to consider your comment. Electronic files should avoid the use of special characters, any form of encryption, and be free of any defects or viruses. For additional information about EPA's public docket, visit the EPA Docket Center homepage at *http://www.epa.gov/epahome/dockets.htm*.

Docket: All documents in the docket are listed in the docket index available in regulations.gov. To access the electronic docket, go to *http://www.regulations.gov*, select ''Advanced Search,'' then ''Docket Search.'' Insert the docket ID number where indicated and select the ''Submit'' button. Follow the instructions on the regulations.gov website to view the docket index or access available documents. Although listed in the index, some information is not publicly available, e.g., CBI or other information whose disclosure is restricted by statute. Certain other material, such as copyrighted material, will be publicly available only in hard copy. Publicly available docket materials are available electronically at *http://www.regulations.gov*, or, if only available in hard copy, at the OPPT Docket. The OPPT Docket is located in the EPA Docket Center (EPA/DC) at Rm. 3334, EPA West Bldg., 1301 Constitution Ave., NW., Washington, DC. The EPA/DC Public Reading Room hours of operation are 8:30 a.m. to 4:30 p.m., Monday through Friday, excluding Federal holidays. The telephone number of the EPA/DC Public Reading Room is (202) 566–1744, and the telephone number for the OPPT Docket is (202) 566–0280. Docket visitors are required to show photographic identification, pass through a metal detector, and sign the EPA visitor log. All visitor bags are processed through an X-ray machine and subject to search. Visitors will be provided an EPA/DC badge that must be visible at all times in the building and returned upon departure.

FOR FURTHER INFORMATION CONTACT: Colby Lintner, Regulatory Coordinator, Environmental Assistance Division, Office of Pollution Prevention and Toxics (7408M), Environmental Protection Agency, 1200 Pennsylvania Ave., NW., Washington, DC 20460–0001; telephone number: (202) 554–1404; e-mail address: *TSCA-Hotline@epa.gov*.

SUPPLEMENTARY INFORMATION:

I. General Information

A. Does this Action Apply to Me?

This action is directed to the public in general. As such, the Agency has not attempted to describe the specific entities that this action may apply to. Although others may be affected, this action applies directly to the submitter of the premanufacture notices addressed in the action. If you have any questions regarding the applicability of this action to a particular entity, consult the person listed under **FOR FURTHER INFORMATION CONTACT**.

B. What Should I Consider as I Prepare My Comments for EPA?

1. *Submitting CBI.* Do not submit this information to EPA through regulations.gov or e-mail. Clearly mark the part or all of the information that you claim to be CBI. For CBI information in a disk or CD-ROM that you mail to EPA, mark the outside of the disk or CD-ROM that you mail to EPA, mark the outside of the disk or CD-ROM as CBI and then identify electronically within the disk or CD-ROM the specific information that is claimed as CBI. In addition to one complete version of the comment that includes information claimed as CBI, a copy of the comment that does not contain the information claimed as CBI must be submitted for inclusion in the public docket. Information so marked will not be disclosed except in accordance with procedures set forth in 40 CFR part 2.

2. *Tips for preparing your comments.* When submitting comments, remember to:

i. Identify the document by docket ID number and other identifying information (subject heading, **Federal Register** date and page number).

ii. Follow directions. The Agency may ask you to respond to specific questions or organize comments by referencing a Code of Federal Regulations (CFR) part or section number.

iii. Explain why you agree or disagree; suggest alternatives and substitute language for your requested changes.

iv. Describe any assumptions and provide any technical information and/or data that you used.

v. If you estimate potential costs or burdens, explain how you arrived at your estimate in sufficient detail to allow for it to be reproduced.

vi. Provide specific examples to illustrate your concerns and suggest alternatives.

vii. Explain your views as clearly as possible, avoiding the use of profanity or personal threats.

viii. Make sure to submit your comments by the comment period deadline identified.

II. Why is EPA Taking this Action?

Section 5 of TSCA requires any person who intends to manufacture (defined by statute to include import) a new chemical (i.e., a chemical not on the TSCA Inventory to notify EPA and comply with the statutory provisions pertaining to the manufacture of new chemicals. Under sections 5(d)(2) and 5(d)(3) of TSCA, EPA is required to publish a notice of receipt of a PMN or an application for a TME and to publish periodic status reports on the chemicals under review and the receipt of notices of commencement to manufacture those chemicals. This status report, which covers the period from October 2, 2007 through November 30, 2007, consists of the PMNs and TMEs, both pending or expired, and the notices of commencement to manufacture a new chemical that the Agency has received under TSCA section 5 during this time period.

III. Receipt and Status Report for PMNs

This status report identifies the PMNs and TMEs, both pending or expired, and the notices of commencement to manufacture a new chemical that the Agency has received under TSCA section 5 during this time period. If you are interested in information that is not included in the following tables, you may contact EPA as described in Unit II. to access additional non-CBI information that may be available.

In Table I of this unit, EPA provides the following information (to the extent that such information is not claimed as CBI) on the PMNs received by EPA during this period: the EPA case number assigned to the PMN; the date the PMN was received by EPA; the projected end date for EPA's review of the PMN; the submitting manufacturer; the potential uses identified by the manufacturer in the PMN; and the chemical identity.

I. 111 PREMANUFACTURE NOTICES RECEIVED FROM: 10/01/07 TO 11/30/07

Case No.	Received Date	Projected Notice End Date	Manufacturer/Importer	Use	Chemical
P–08–0001	10/01/07	12/29/07	CBI	(G) Esterified polyamic acid polymer for coatings, open, non-dispersive use	(G) Esterified polyamic acid polymer
P–08–0002	10/01/07	12/29/07	Genencor, (Danisco, USA)	(S) Textile chemical formulation (TCF) of denim bleaching products; laundry denim bleaching and/or modification of the cast of denim	(S) Benzonitrile, 4-hydroxy-3,5-dimethoxy- (syringonitrile)
P–08–0003	10/01/07	12/29/07	CBI	(S) Intermediate for paint binder	(G) Methacrylate monomer
P–08–0004	10/01/07	12/29/07	CBI	(S) Topcoat for leather; topcoat for plastics and epdn rubber	(G) Aliphatic polycarbonate diol polyurethane
P–08–0005	10/01/07	12/29/07	CBI	(S) Topcoat for leather; topcoat for plastics and epon rubber	(G) Aliphatic polycarbonate diol polyurethane
P–08–0006	10/03/07	12/31/07	CBI	(G) Resin for coatings	(G) Acrylic polyester microgel polymer
P–08–0007	10/03/07	12/31/07	CBI	(G) Resin for coatings	(G) Polyester polymer
P–08–0008	10/03/07	12/31/07	CBI	(G) Resin for coatings	(G) Acrylic polymer
P–08–0009	10/03/07	12/31/07	CBI	(G) Resin for coatings	(G) Acrylic polymer
P–08–0010	10/03/07	12/31/07	CBI	(G) Resin for coatings	(G) Acrylic polymer
P–08–0011	10/04/07	01/01/08	CBI	(S) Paint binder (whichever of the two PMN substance is produced will be used as a paint binder)	(G) Octyl acrylates
P–08–0012	10/04/07	01/01/08	CBI	(S) Paint binder (whichever of the two PMN substance is produced will be used as a paint binder)	(G) Octyl acrylates
P–08–0013	10/03/07	12/31/07	Incorez Corporation	(S) Curing agent for epoxy based coatings	(G) Emulsified polyamine hardener
P–08–0014	10/03/07	12/31/07	CBI	(G) Resin for coatings	(G) Acrylic polymer
P–08–0015	10/03/07	12/31/07	CBI	(G) Resin for coatings	(G) Acrylic polymer
P–08–0016	10/09/07	01/06/08	CBI	(S) Chemical Intermediate	(G) Hydroxymercapto substituted benzene

I. 111 PREMANUFACTURE NOTICES RECEIVED FROM: 10/01/07 TO 11/30/07—Continued

Case No.	Received Date	Projected Notice End Date	Manufacturer/Importer	Use	Chemical
P–08–0017	10/09/07	01/06/08	The Dow Chemical Company	(G) Component of electrical laminates	(G) Phosphorated phenolic novolac
P–08–0018	10/10/07	01/07/08	CBI	(G) Oilfield applications	(G) Modified olefins
P–08–0019	10/10/07	01/07/08	CBI	(G) Component of manufactured consumer article - contained use	(G) Benzene, 1,4-bis(aralkoxy)-
P–08–0020	10/10/07	01/07/08	CBI	(G) Chemical intermediate in the manufacture of other industrial chemicals, and additive in formulated coating products	(S) Propanol, 1 (or 2)-(methyl-2-phenoxyethoxy)-
P–08–0021	10/11/07	01/08/08	Robertet, Inc.	(S) As an odoriferous component of fragrance compounds	(S) Alcoholic beverages, rum, ext.
P–08–0022	10/11/07	01/08/08	Mitsubishi Chemical Performance Polymers, Inc.	(S) Molding material for agriculture; molding material for food package; material for fiber, monofilament; molding material for construction; material for sheet, film	(G) Alkanedioic acid, polymer with butanedioic acid, 1,4-butanediol and 2-hydroxypropanoic acid
P–08–0023	10/11/07	01/08/08	Mitsubishi Chemical Performance Polymers, Inc.	(S) Molding material for agriculture; molding material for food package; material for fiber, monofilament; molding material for construction; material for sheet, film	(G) Alkanedioic acid, polymer with 1,4-butanediol and 2-hydroxypropanoic acid
P–08–0024	10/10/07	01/07/08	CBI	(G) Crosslinking agent to be ultimately used in the manufacture of automotive and aircraft coating materials	(S) 1,3-dioxolane-4-butanol,2-ethenyl-
P–08–0025	10/12/07	01/09/08	CBI	(G) Papermaking chemical	(S) Formamide, *N*-ethenyl-, homopolymer, hydrolyzed, *N*-(3-carboxy-1-oxopropyl) *N*-[2-hydroxy-3-(trimethylammonio)propyl] derivs., chlorides
P–08–0026	10/15/07	01/12/08	CBI	(S) Melt processing e.g. injection moulding to produce finished articles	(S) Methanone, 1,1′-(1,4-phenylene)bis[1-(4-fluorophenyl)-, polymer with bis(4-hydroxyphenyl)methanone
P–08–0027	10/15/07	01/12/08	CBI	(G) Silicone intermediate	(G) Dimethyl siloxane polyglycol
P–08–0028	10/15/07	01/12/08	CBI	(S) Textile treating agent	(G) Dimethyl siloxane polyethylene glycol
P–08–0029	10/17/07	01/14/08	CBI	(G) Destructive use	(G) Hindered phenolic ester
P–08–0030	10/18/07	01/15/08	CBI	(G) A. Synthetic lubricant base fluid (major); B. Reactive intermediate (minor)	(G) 1,1 Geminal disubstituted ethylene
P–08–0031	10/18/07	01/15/08	CBI	(G) A. Synthetic lubricant base fluid (major); B. Reactive intermediate (minor)	(G) 1,1 Geminal disubstituted ethylene
P–08–0032	10/18/07	01/15/08	CBI	(G) A. Synthetic lubricant base fluid (major); B. Reactive intermediate (minor)	(G) 1,1 Geminal disubstituted ethylene
P–08–0033	10/19/07	01/16/08	CBI	(G) Chemical intermediate	(G) Chloro fluoro alkane
P–08–0034	10/22/07	01/19/08	Hydbrid Plastics, Inc.	(S) Epoxy resin for high temperature aerospace composites	(S) Oxirane, 2-[[3-(trimethoxysilyl)propoxy]methyl]-, hydrolyzed
P–08–0035	10/19/07	01/16/08	CBI	(G) Fabric treatment agent	(S) 6*H*-dibenz[c,e][1,2]oxaphosphorium,6-(phenylmethyl)-,6-oxide
P–08–0036	10/23/07	01/20/08	Fujifilm Hunt Chemicals U.S.A., Inc.	(S) Intermediated for production of PMN substance P–06–444	(S) Benzenecarboximidamide, *n*-hydroxy-4-nitro-
P–08–0037	10/24/07	01/21/08	Forbo Adhesives, LLC	(G) Hot melt polyurethane adhesive	(G) Isocyanate functional polyester polyether urethane polymer
P–08–0038	10/25/07	01/22/08	CBI	(S) Aliphatic acrylate polymer used in the manufacture of Ultraviolet curable inks and coatings	(G) Tertiary amine acrylate
P–08–0039	10/25/07	01/22/08	CBI	(G) Hardening agent	(G) Mixed amino diaryl sulfone isomers
P–08–0040	10/25/07	01/22/08	CBI	(G) Sealant	(G) Polyurethane hybrid

I. 111 PREMANUFACTURE NOTICES RECEIVED FROM: 10/01/07 TO 11/30/07—Continued

Case No.	Received Date	Projected Notice End Date	Manufacturer/Importer	Use	Chemical
P–08–0041	10/25/07	01/22/08	CBI	(G) Paint	(G) Neodecanoic acid, oxiranyl ester modified alkyl acrylate,polymer with alkyl acrylates, styrene and hydroxyalkyl acrylates, peroxide-initiated
P–08–0042	10/23/07	01/20/08	CBI	(G) Foam additive	(G) Treated silica
P–08–0043	10/26/07	01/23/08	CBI	(G) Jacketing of wires and data-cables	(G) Fluoropolymer
P–08–0044	10/26/07	01/23/08	CBI	(G) Non-dispersive use	(G) Animated epoxy resin
P–08–0045	10/29/07	01/26/08	Rahn USA Corp.	(S) Ultra violet / electron beam reactive formulations	(G) Aliphatic urethane acrylate oligomer
P–08–0046	10/29/07	01/26/08	CBI	(G) Coating additive	(G) Mixed metal oxide complex
P–08–0047	10/29/07	01/26/08	CBI	(G) Raw material	(G) Metal oxide complex
P–08–0048	10/31/07	01/28/08	CBI	(G) Colourant dispersant	(G) Acrylic polymer
P–08–0049	10/30/07	01/27/08	CBI	(G) Ink additive	(G) 2-propenoic acid, 2-methyl-, polymer with alkyl 2-propenoate, ethenylbenzene and 2-propenoic acid, metal salt, peroxycompound-initiated
P–08–0050	10/31/07	01/28/08	CBI	(G) Metalworking fluid component	(G) Amide polymer
P–08–0051	10/31/07	01/28/08	3M Company	(G) Adhesive	(G) Substituted acrylate polymer
P–08–0052	11/01/07	01/29/08	BAE Systems , ordnance systems Inc.	(G) For use as a high explosive in explosives formulatons for DOD	(S) Nitrotriazolone 3-nitro-1,2,4-triazol-5-one
P–08–0053	11/01/07	01/29/08	Reichhold, Inc.	(S) Topcoats for industrial equipment	(G) Urethane modified vegetable oil, epoxidized polymer
P–08–0054	11/01/07	01/29/08	CBI	(G) Semiconductor coating	(G) Poly (arylene ether)
P–08–0055	11/01/07	01/29/08	CBI	(G) Open non-dispersive (coatings)	(G) Aqueous hydroxyl-functional polyester polyacrylate dispersion
P–08–0056	11/01/07	01/29/08	CBI	(G) Functional fluid	(G) Polyalphaolefins; paos
P–08–0057	11/01/07	01/29/08	CBI	(G) Functional fluid	(G) Polyalphaolefins; paos
P–08–0058	11/01/07	01/29/08	CBI	(G) Functional fluid	(G) Polyalphaolefins; paos
P–08–0059	11/01/07	01/29/08	CBI	(G) Functional fluid	(G) Polyalphaolefins; paos
P–08–0060	11/01/07	01/29/08	CBI	(G) Functional fluid	(G) Polyalphaolefins; paos
P–08–0061	10/31/07	01/28/08	CBI	(G) Reactive emulsifier for emulsion polymerization	(G) Alcohol, reaction products with alkylene oxide, alkenyl glycidyl ether sulfate
P–08–0062	11/01/07	01/29/08	Reichhold, Inc.	(S) Topcoats for industrial equipment	(G) Urethane modified vegetable oil, epoxidized polymer
P–08–0063	11/01/07	01/29/08	CBI	(S) Extrusion of tubing systems; injection molding of special applications	(G) Polyamide based on alkanedioic acid, alkyl lactam and polyoxyalkylene
P–08–0064	11/02/07	01/30/08	CBI	(G) An open non-dispersive use	(G) Rosin modified phenolic resin
P–08–0065	11/01/07	01/29/08	CBI	(G) Rheology additive	(G) Urethane-urea
P–08–0066	11/01/07	01/29/08	CBI	(G) Rheology additive	(G) Urethane-urea
P–08–0067	11/05/07	02/02/08	CIBA Corporation	(S) Pigment for printing ink used in time-temperature indicator labeling	(G) 1′,1‴-[1,4-phenylenebis(methylene)]bis[1′,3′-dihydro-8-methoxy-3′3,′-dimethyl-6-nitro- aromatic substituted indole
P–08–0068	11/05/07	02/02/08	Firmenich Inc.	(S) Aroma for use in fragrance mixtures, which in turn are used in perfumes, soaps, cleansers, etc.	(S) Definition: Extractives and their physically modified derivatives. *Schinus Terebinthifolius*.
P–08–0068	11/05/07	02/02/08	Firmenich Inc.	(S) Aroma for use in fragrance mixtures, which in turn are used in perfumes, soaps, cleansers, etc.	(S) Oils, schinus terebinthifolius
P–08–0069	11/05/07	02/02/08	CBI	(G) Fuel additive-destructive use	(G) Alkenyl succinimide
P–08–0070	11/05/07	02/02/08	CBI	(G) Coating	(G) Fluorosilicone
P–08–0071	11/05/07	02/02/08	CBI	(G) Coating	(G) Fluorosilicone
P–08–0072	11/05/07	02/02/08	CBI	(G) Thickener for inorganic materials	(G) Poly (methacryloyloxyalkyl trialkylammonium salt)
P–08–0073	11/06/07	02/03/08	CBI	(S) Crosslinker for coatings and adhesives	(G) Aliphatic polyisocyanate, C_{16}-alcohol and polyalkylene glycol-blocked
P–08–0074	11/06/07	02/03/08	CBI	(S) Crosslinker for coatings and adhesives	(G) Aliphatic polyisocyanate, C_{16}-alcohol and polyalkylene glycol-blocked
P–08–0075	11/06/07	02/03/08	CBI	(G) Paint	(G) Polyisocyanate resin
P–08–0076	11/07/07	02/04/08	CBI	(G) For application to cellulosic substrates	(G) Disubstituted phenylazo naphthalenstrisulfonic acid, salt

I. 111 PREMANUFACTURE NOTICES RECEIVED FROM: 10/01/07 TO 11/30/07—Continued

Case No.	Received Date	Projected Notice End Date	Manufacturer/Importer	Use	Chemical
P–08–0077	11/13/07	02/10/08	Orient Corporation of America	(S) Charge stabilizer for electro-photo copy toner	(S) Ferrate(1-), bis[4-[2-[5-(1,1-dimethylethyl)-2-(hydroxy-.kappa.o)phenyl]diazenyl]-.kappa.n1]-3-(hydroxy-.kappa.o]-n-phenyl-2-naphthalenecarboxamidato(2-)], hydrogen (1:1)
P–08–0078	11/13/07	02/10/08	CBI	(S) PMN material in fragrance products	(G) Plant oil
P–08–0079	11/13/07	02/10/08	Reichhold, Inc.	(S) Resin for paints/coatings	(G) Amine salt of polyester polyol, hydroxy substituted carboxylic acid, cycloaliphatic glycol, aliphatic diisocyanate and hydroxy substituted alkylamines.
P–08–0080	11/13/07	02/10/08	Reichhold, Inc.	(S) Resin for paints/coatings	(G) Amine salt of polyester polyol, cycloaliphatic glycol, hydroxy substituted carboxylic acid, alkyldiamine and aliphatic diisocyanate
P–08–0081	11/13/07	02/10/08	Lubrizol Metalworking Additives	(S) Metalworking fluid component	(S) Soybean oil, maleated, ester with polyethylene glycol mono-C_{12-16}-alkyl ethers
P–08–0082	11/13/07	02/10/08	Lubrizol Metalworking Additives	(S) Metalworking fluid component	(S) Soybean oil, maleated, ester with polyethylene glycol mono-C_{12-16}-alkyl ethers, potassium salts
P–08–0083	11/13/07	02/10/08	Lubrizol Metalworking Additives	(S) Metalworking fluid component	(S) Soybean oil, maleated, ester with polyethylene glycol mono-C_{12-16}-alkyl ethers, compound with ethanolamine
P–08–0084	11/13/07	02/10/08	Lubrizol Metalworking Additives	(S) Metalworking fluid component	(S) Soybean oil, maleated, ester with polyethylene glycol mono-C_{12-16}-alkyl ethers, compound with triethanolamine
P–08–0085	11/13/07	02/10/08	Lubrizol Metalworking Additives	(S) Metalworking fluid component	(S) Soybean oil, maleated, ester with polyethylene glycol mono-C_{12-16}-alkyl ethers, compound with branched 3-(tridecyloxy)-1-propanamine
P–08–0086	11/13/07	02/10/08	Lubrizol Metalworking Additives	(S) Metalworking fluid component	(S) Amines, C_{12-14}-tert-alkyl, compounds with maleated soybean oil ester with polyethylene glycol mono-C_{12-16}-alkyl ethers
P–08–0087	11/14/07	02/11/08	CBI	(G) Lubricant additive open, non-dispersive use	(G) Alkyl acid reaction products with metal salt of alkyl alcohol
P–08–0088	11/14/07	02/11/08	CBI	(G) Emulsifier	(G) Perfluorodioxyalkonicacid salt
P–08–0089	11/15/07	02/12/08	CBI	(G) Component of paint	(G) Fatty acid oils polymer with aromatic acid, acrylates, styrene, polyol and conjugated anhydrides
P–08–0090	11/01/07	01/29/08	CBI	(G) Modifier for epoxy formulations	(G) Epoxy liquid polysulfide
P–08–0091	11/13/07	02/10/08	Sasol North America Inc.	(S) Polymer performance additive	(S) Oxirane, 2-[[3-(trimethoxysilyl)propoxy]methyl]-, reaction products with boehmite (al(oh)o)
P–08–0092	11/13/07	02/10/08	Sasol North America Inc.	(S) Polymer performance additive	(S) Oxirane, 2-[[3-(trimethoxysilyl)propoxy]methyl]-, reaction products with boehmite (al(oh)o)
P–08–0093	11/16/07	02/13/08	CBI	(G) Binder in foundry applications	(G) Aromatic polyester polyol
P–08–0094	11/19/07	02/16/08	CBI	(G) Lubricant Additive	(G) Alkyl methacrylate esters telomers with 1-dodecanethiol, tert-bu 2-ethylhexaneperoxoate-initiated
P–08–0095	11/19/07	02/16/08	Cytec Industries Inc.	(S) Process chemical for sulfur removal from diesel fuel	(S) Phosphonium, methyltris (2-methylpropyl)-, salt with 4-methylbenzenesulfonic acid (1:1)
P–08–0096	11/26/07	02/23/08	CBI	(G) Binder	(G) Polymer of styrene-butadiene, polybutadiene, ethoxylated nonyl pheneol acrylate and 1,6-hexanediol diacrylate

I. 111 PREMANUFACTURE NOTICES RECEIVED FROM: 10/01/07 TO 11/30/07—Continued

Case No.	Received Date	Projected Notice End Date	Manufacturer/Importer	Use	Chemical
P–08–0097	11/26/07	02/23/08	CBI	(G) Binder	(G) Polymer of styrene-butadiene, polybutanediene, ethoxylated nonyl pheneol acrylate and 1,6-hexanediol diacrylate
P–08–0098	11/26/07	02/23/08	CBI	(G) Binder	(G) Polymer of styrene-butadiene, polybutanediene, ethoxylated nonyl pheneol acrylate and 1,6-hexanediol diacrylate
P–08–0099	11/21/07	02/18/08	AOC LLC	(S) Polyester component for pultrusion of fiberglass reinforced plastic parts	(S) 1,4-benzenedicarboxylic acid, polymer with 1,2-ethanediol, 2,5-furandione, 2,2′-oxybis [ethanol] and 1,2-propanediol
P–08–0100	11/26/07	02/23/08	CBI	(G) Metalworking fluid	(G) Polypropylene glycol succinate
P–08–0101	11/26/07	02/23/08	Cytec Industries Inc.	(G) Coating resin additive	(S) Phosphinic acid, *p,p*-diphenyl-
P–08–0102	11/26/07	02/23/08	CBI	(G) Industrial liquid coatings	(G) Caprolactam-blocked aliphatic isocyanate polymer
P–08–0103	11/26/07	02/23/08	CBI	(G) Intermediate	(G) Dialkylmonoheterocycledione, homopolymer, ester with 1,2,3-propanetriol
P–08–0104	11/28/07	02/25/08	CBI	(G) Open, non-dispersive use (additive to coating layer)	(G) Gallium, phthalocyanine complex
P–08–0105	11/28/07	02/25/08	CBI	(G) Open, non-dispersive use (additive to coating layer)	(G) Azo compound
P–08–0106	11/28/07	02/25/08	CBI	(S) Binder for coatings for wood	(S) 2-propenoic acid, 2-methyl-, polymer with butyl 2-methyl-2-propenoate, butyl 2-propenoate, *n*-(1,1-dimethyl-3-oxobutyl)-2-propenamide, ethenylbenzene and methyl 2-methyl-2-propenoate
P–08–0107	11/28/07	02/25/08	CBI	(G) Rubber additive	(G) Alkoxy silane
P–08–0108	11/28/07	02/25/08	CBI	(G) Marker for liquid petroleum fuels	(G) Alkylphthalein ester
P–08–0109	11/29/07	02/26/08	CBI	(G) Polyester substrate auxiliary	(G) Disubstituted methoxyacetanilide
P–08–0110	11/29/07	02/26/08	CBI	(G) Raw material	(G) Mixed metal halide

In Table II of this unit, EPA provides the following information (to the extent that such information is not claimed as CBI) on the TMEs received:

II. 1 TEST MARKETING EXEMPTION NOTICES RECEIVED FROM: 10/01/07 TO 11/30/07

Case No.	Received Date	Projected Notice End Date	Manufacturer/Importer	Use	Chemical
T–08–0001	11/19/07	01/02/08	Cytec industries Inc.	(S) Process chemical for sulfur removal from diesel fuel	(S) Phosphonium, methyltris (2-methylpropyl)-, salt with 4-methylbenzenesulfonic acid (1:1)

In Table III of this unit, EPA provides the following information (to the extent that such information is not claimed as CBI) on the Notices of Commencement to manufacture received:

III. 41 NOTICES OF COMMENCEMENT FROM: 10/01/07 TO 11/30/07

Case No.	Received Date	Commencement Notice End Date	Chemical
P–02–0748	11/05/07	10/10/07	(S) Heptacyclo[11.11.1.13,11.15,21.17,19.19,17.115,23]dodecasiloxane, dodecaphenyl-
P–02–0750	11/05/07	10/10/07	(S) Pentacyclo[9.5.1.13,9.15,15.17,13]octasiloxane, octamethyl-
P–02–0751	11/05/07	10/10/07	(S) Pentacyclo[9.5.1.13,9.15,15.17,13]octasiloxane, octaphenyl-
P–02–0778	11/07/07	10/10/07	(G) Dialkyl dithiocarbamate ester
P–02–0860	11/14/07	10/16/07	(G) Silicoaluminophosphate with template
P–05–0079	11/06/07	10/12/07	(G) Potassium salt of substituted arylazo butanamide
P–05–0138	11/29/07	11/20/07	(G) Multifunctional acrylate oligomer resin
P–05–0420	11/21/07	11/01/07	(S) Hexanoic acid, 6,6′,6″-(1,3,5-triazine-2,4,6-triyltriimino)tris-, compound with 1-amino-2-propanol

III. 41 NOTICES OF COMMENCEMENT FROM: 10/01/07 TO 11/30/07—Continued

Case No.	Received Date	Commencement Notice End Date	Chemical
P–05–0423	11/21/07	11/01/07	(S) Hexanoic acid, 6,6′,6″-(1,3,5-triazine-2,4,6-triyltriimino)tris-, compound with 2-(2-aminoethoxy) ethanol
P–06–0489	11/29/07	11/16/07	(G) Fluoroalkyl methacrylate copolymer
P–06–0546	11/27/07	11/19/07	(G) Substituted carbomonocycle, polymer with isocyanate substituted alkyl carbomonocycle, substituted alkenoates, substituted heteromonocycle, alkanedioic acid, alkane diol, reaction products with substituted alkylamine, compounds with substituted alkanol
P–06–0563	11/29/07	11/21/07	(G) Fluoroalkyl methacrylate copolymer
P–06–0820	11/20/07	11/12/07	(G) Trisubstituted triazine
P–07–0048	11/23/07	08/21/07	(G) Salt of amine with aliphatic acid
P–07–0049	11/23/07	10/30/07	(G) Aliphatic polyamide
P–07–0132	11/23/07	11/05/07	(G) Polyurethane prepolymer; polyurethane hot melt adhesive
P–07–0156	11/21/07	10/10/07	(G) Aminomercapto siloxane
P–07–0216	11/13/07	11/08/07	(G) Substituted phenyl amino alkyl sulfonyl reaction product with substituted naphthalenesulfonic acid amino compound
P–07–0250	11/14/07	10/25/07	(G) Fatty acid modified polyester resin
P–07–0300	11/02/07	10/29/07	(G) Acrylic polymer on the basis of isobutyl methacrylate
P–07–0318	11/15/07	10/16/07	(G) Organic lithium compound
P–07–0352	11/14/07	10/29/07	(G) Modified polymer of substituted acrylate and alkyl methacrylates
P–07–0361	11/06/07	10/23/07	(G) Linseed oil, ester with pentaerythritol, polymer with hydrazine, 3-hydroxy-2-(hydroxymethyl)2-methylpropanoic acid, 5-isocyanato-1-(isocyanatomethyl)-alkylcyclohexane, 1,1′-methylenebis[4.isocyanatocyclohexane] and poly-propylene glycol, compounds with triethylamine
P–07–0392	11/05/07	10/08/07	(G) Modified epoxy resin
P–07–0402	11/21/07	11/05/07	(G) Alkylphenoxy naphthalic acid amide, *n*-alkylphenyl-
P–07–0408	11/05/07	10/16/07	(G) Epoxy phenolic resin
P–07–0439	11/21/07	10/25/07	(G) Polycarboxylate, modified sodium salt
P–07–0448	10/29/07	10/16/07	(G) Secondary amine adduct
P–07–0495	11/09/07	10/19/07	(G) Amino substituted benzoic acid
P–07–0498	11/26/07	11/06/07	(S) 2-propenoic acid, 2-methyl-, butyl ester, polymer with 2-ethylhexyl 2-propenoate, 2-methylpropyl 2-methyl-2-propenoate and 1,2-propanediol mono(2-methyl-2-propenoate), tert-bu 3,5,5-trimethylhexaneperoxoate-initiated
P–07–0519	11/01/07	10/05/07	(G) Aminobenzene
P–07–0525	11/05/07	10/21/07	(G) Fatty acids, hydrogenated, reaction products with tetraethylenepentamine, aliphatic carboxylate
P–07–0529	10/31/07	10/18/07	(G) 2-propenoic acid, 2-methyl-, telomer with 1-alkylthiol, alkyl 2-propenoate and alkyl 2-methyl-2-propenoate, ammonium salt
P–07–0539	11/20/07	11/15/07	(G) Epoxy acrylic resin
P–07–0560	10/29/07	10/19/07	(G) Acrylate modified acrylonitrile, butadiene, styrene polymer
P–07–0561	11/06/07	10/23/07	(G) Metal salt of styrene - acrylic copolymer
P–07–0569	11/26/07	10/29/07	(S) Siloxanes and silicones, di-me, me [(2-methyl-1-oxo-2-propen-1-yl)oxy]methyl, [(methoxymethyl[[(2-methyl-1-oxo-2-propen-1-yl)oxy]methyl)silyl]oxy]-terminated
P–07–0630	11/30/07	11/27/07	(G) Polyester polyether urethane block copolymer
P–99–0303	11/30/07	11/27/07	(G) *N*-butyl, 2-ethylhexyl acrylate copolymer

List of Subjects

Environmental protection, Chemicals, Premanufacturer notices.

Dated: January 14, 2008.

Chandler Sirmons,

Acting Director, Information Management Division, Office of Pollution Prevention and Toxics.

[FR Doc. E8–1003 Filed 1–22–08; 8:45 am]

BILLING CODE 6560–50–S

ENVIRONMENTAL PROTECTION AGENCY

[EPA–HQ–OPP–2006-0936; FRL–8345–7]

Notice of Filing of Pesticide Petitions for Residues of Pesticide Chemicals in or on Various Commodities

AGENCY: Environmental Protection Agency (EPA).

ACTION: Notice.

SUMMARY: This notice announces the initial filing of pesticide petitions proposing the establishment or modification of regulations for residues of pesticide chemicals in or on various commodities.

DATES: Comments must be received on or before February 22, 2008.

ADDRESSES: Submit your comments, identified by docket identification (ID) number and the pesticide petition number (PP) of interest, by one of the following methods:

• *Federal eRulemaking Portal*: *http://www.regulations.gov*. Follow the on-line instructions for submitting comments.

• *Mail*: Office of Pesticide Programs (OPP) Regulatory Public Docket (7502P), Environmental Protection Agency, 1200 Pennsylvania Ave., NW., Washington, DC 20460–0001.

• *Delivery*: OPP Regulatory Public Docket (7502P), Environmental Protection Agency, Rm. S–4400, One Potomac Yard (South Bldg.), 2777 S. Crystal Dr., Arlington, VA. Deliveries are only accepted during the Docket's normal hours of operation (8:30 a.m. to

4 p.m., Monday through Friday, excluding legal holidays). Special arrangements should be made for deliveries of boxed information. The Docket Facility telephone number is (703) 305–5805.

Instructions: Direct your comments to the assigned docket ID number and the pesticide petition number of interest. EPA's policy is that all comments received will be included in the docket without change and may be made available on-line at *http://www.regulations.gov*, including any personal information provided, unless the comment includes information claimed to be Confidential Business Information (CBI) or other information whose disclosure is restricted by statute. Do not submit information that you consider to be CBI or otherwise protected through regulations.gov or e-mail. The regulations.gov website is an ''anonymous access'' system, which means EPA will not know your identity or contact information unless you provide it in the body of your comment. If you send an e-mail comment directly to EPA without going through regulations.gov, your e-mail address will be automatically captured and included as part of the comment that is placed in the docket and made available on the Internet. If you submit an electronic comment, EPA recommends that you include your name and other contact information in the body of your comment and with any disk or CD-ROM you submit. If EPA cannot read your comment due to technical difficulties and cannot contact you for clarification, EPA may not be able to consider your comment. Electronic files should avoid the use of special characters, any form of encryption, and be free of any defects or viruses.

Docket: All documents in the docket are listed in the docket index available in regulations.gov. To access the electronic docket, go to *http://www.regulations.gov*, select ''Advanced Search,'' then ''Docket Search.'' Insert the docket ID number where indicated and select the ''Submit'' button. Follow the instructions on the regulations.gov website to view the docket index or access available documents. Although listed in the index, some information is not publicly available, e.g., CBI or other information whose disclosure is restricted by statute. Certain other material, such as copyrighted material, is not placed on the Internet and will be publicly available only in hard copy. Publicly available docket materials are available electronically at *http://www.regulations.gov*, or, if only available in hard copy, at the OPP Regulatory Public Docket in Rm. S–4400, One Potomac Yard (South Bldg.), 2777 S. Crystal Dr., Arlington, VA. The hours of operation of this Docket Facility are from 8:30 a.m. to 4 p.m., Monday through Friday, excluding legal holidays. The Docket Facility telephone number is (703) 305–5805.

FOR FURTHER INFORMATION CONTACT: The person listed at the end of the pesticide petition summary of interest.

SUPPLEMENTARY INFORMATION:

I. General Information

A. Does this Action Apply to Me?

You may be potentially affected by this action if you are an agricultural producer, food manufacturer, or pesticide manufacturer. Potentially affected entities may include, but are not limited to:

- Crop production (NAICS code 111).
- Animal production (NAICS code 112).
- Food manufacturing (NAICS code 311).
- Pesticide manufacturing (NAICS code 32532).

This listing is not intended to be exhaustive, but rather provides a guide for readers regarding entities likely to be affected by this action. Other types of entities not listed in this unit could also be affected. The North American Industrial Classification System (NAICS) codes have been provided to assist you and others in determining whether this action might apply to certain entities. If you have any questions regarding the applicability of this action to a particular entity, consult the person listed at the end of the pesticide petition summary of interest.

B. What Should I Consider as I Prepare My Comments for EPA?

1. *Submitting CBI*. Do not submit this information to EPA through regulations.gov or e-mail. Clearly mark the part or all of the information that you claim to be CBI. For CBI information in a disk or CD-ROM that you mail to EPA, mark the outside of the disk or CD-ROM as CBI and then identify electronically within the disk or CD-ROM the specific information that is claimed as CBI. In addition to one complete version of the comment that includes information claimed as CBI, a copy of the comment that does not contain the information claimed as CBI must be submitted for inclusion in the public docket. Information so marked will not be disclosed except in accordance with procedures set forth in 40 CFR part 2.

2. *Tips for preparing your comments*. When submitting comments, remember to:

i. Identify the document by docket ID number and other identifying information (subject heading, **Federal Register** date and page number).

ii. Follow directions. The Agency may ask you to respond to specific questions or organize comments by referencing a Code of Federal Regulations (CFR) part or section number.

iii. Explain why you agree or disagree; suggest alternatives and substitute language for your requested changes.

iv. Describe any assumptions and provide any technical information and/or data that you used.

v. If you estimate potential costs or burdens, explain how you arrived at your estimate in sufficient detail to allow for it to be reproduced.

vi. Provide specific examples to illustrate your concerns and suggest alternatives.

vii. Explain your views as clearly as possible, avoiding the use of profanity or personal threats.

viii. Make sure to submit your comments by the comment period deadline identified.

II. Docket ID Numbers

When submitting comments, please use the docket ID number and the pesticide petition number of interest, as shown in the table.

PP Number	Docket ID Number
PP 3E6585	EPA–HQ–OPP–2007–0626
PP 2E6481	EPA–HQ–OPP–2007–0626
PP 3E6544	EPA–HQ–OPP–2007–0626
PP 2E6424	EPA–HQ–OPP–2007–0626
PP 7E7235	EPA–HQ–OPP–2007–1069
PP 7E7256	EPA–HQ–OPP–2007–0987
PP 7E7270	EPA–HQ–OPP–2007–1106
PP 7E7273	EPA–HQ–OPP–2007–1161
PP 7F7176	EPA–HQ–OPP–2007–1076
PP 7F7226	EPA–HQ–OPP–2007–0506
PP 0F6159	EPA–HQ–OPP–2007–1021
PP 6F7070	EPA–HQ–OPP–2007–1021

III. What Action is the Agency Taking?

EPA is printing notice of the filing of pesticide petitions received under section 408 of the Federal Food, Drug, and Cosmetic Act (FFDCA), 21 U.S.C. 346a, proposing the establishment or modification of regulations in 40 CFR part 180 for residues of pesticide chemicals in or on various food commodities. EPA has determined that

the pesticide petitions described in this notice contain data or information regarding the elements set forth in FFDCA section 408(d)(2); however, EPA has not fully evaluated the sufficiency of the submitted data at this time or whether the data support granting of the pesticide petitions. Additional data may be needed before EPA rules on these pesticide petitions.

Pursuant to 40 CFR 180.7(f), a summary of each of the petitions included in this notice, prepared by the petitioner, is included in a docket EPA has created for each rulemaking. The docket for each of the petitions is available on-line at *http://www.regulations.gov*.

A. New Tolerances

1. *PPs 3E6585, 2E6481, 3E6544, and 2E6424*. (EPA–HQ–OPP–2007–0626). OR-CAL Inc., 29454 Meadowview Rd., Junction City, OR 97448, on behalf of the Interregional Research Project Number 4 (IR-4), 500 College Road East, Suite 201W, Princeton, NJ 08540, proposes to establish tolerances for residues of the molluscicide metaldehyde in or on food commodities berry group 13, lingonberry, juneberry; and salal at 0.1 part per million (ppm); artichoke at 0.05 ppm; cactus, prickly pear at 0.1 ppm; and watercress at 2.0 ppm. Lonza Inc., is the primary source of technical metaldehyde. OR-CAL, Inc., prepared and summarized the information in support of the pesticide petitions for metaldehyde, the samples were analyzed using a modification of the reference method. Analytical method for the determination of metaldehyde in lettuce by gas chromatography/mass spectrometry (GC/MS), ENC-3/99, EN-CAS Analytical Laboratories. Contact: Shaja R. Brothers, telephone number: (703) 308–3194; e-mail address: *brothers.shaja@epa.gov*.

2. *PP 7E7235*. (EPA–HQ–OPP–2007–1069). Interregional Research Project Number 4 (IR-4), 500 College Road East, Suite 201W, Princeton, NJ 08540, proposes to establish tolerances for residues of the fungicide cyprodinil: 4-cyclopropyl-6-methyl-N-phenyl-2-pyrimidinamine in or on food commodities tomato at 0.40 ppm; tomatillo at 0.40 ppm; tomato, paste at 1.0 ppm; avocado at 1.2 ppm; sapote, black at 1.2 ppm; canistel at 1.2 ppm; sapote, mamey at 1.2 ppm; mango at 1.2 ppm; papaya at 1.2 ppm; sapodilla at 1.2 ppm; star apple at 1.2 ppm; herbs subgroup 19A, fresh at 25 ppm; herbs subgroup 19A, dried at 170 ppm; vegetable, root and tuber, group, leaves at 9.0 ppm; vegetable, root, except sugarbeet subgroup at 0.60 ppm; lemon at 0.6 ppm; lime at 0.6 ppm; kiwifruit at 1.8 ppm; onion, dry bulb at 0.50 ppm; onion, green at 1.2 ppm; strawberry at 7.0 ppm; and cucurbits at 0.40 ppm. Syngenta Crop Protection has developed and validated analytical methodology for enforcement purposes. This method (Syngenta Crop Protection Method AG-631B) has passed an Agency petition method validation for several commodities and is currently the enforcement method for cyprodinil. An extensive database of method validation data using this method on various crop commodities is available. Contact: Shaja R. Brothers, telephone number: (703) 308–3194; e-mail address: *brothers.shaja@epa.gov*.

3. *PP 7E7256*. (EPA–HQ–OPP–2007–0987). Interregional Research Project Number 4 (IR-4), 500 College Road East, Suite 201W, Princeton, NJ 08540, proposes to establish a tolerance for residues of the fungicide fenbuconazole, (alpha-(2-(4-chlorophenyl)ethyl]-alpha-phenyl-3-(1H-1,2,4-triazole)-1-propanenitrile) and its metabolites cis and trans-5-(4-chlorophenyl)-dihydro-3-phenyl-3-(1H-1,2,4-triazole-1-ylmethyl)-2-3H-furanone) in or on food commodity pepper at 0.40 ppm. Adequate analytical methods are available to enforce the tolerances of fenbuconazole residues in pepper commodities using Rohm and Haas analytical method (Technical Report Number 34–90–47 or Technical Report Number 34–90–47R). The methods have undergone independent method validations and were also successfully validated by EPA with minor modifications suggested by the Agency that included procedure for the standardization of the silica gel and Florisil column clean-up elution pattern (TR–34–90–47R). The limits of quantitation and detection of the method are 0.01 μg/g and 0.003 μg/g, respectively. Contact: Shaja R. Brothers, telephone number: (703) 308–3194; e-mail address: *brothers.shaja@epa.gov*.

4. *PP 7E7270*. (EPA–HQ–OPP–2007–1106). Interregional Research Project Number 4 (IR-4), 500 College Road East, Suite 201W, Princeton, NJ 08540, proposes to establish tolerances for residues of the fungicide chlorothalonil in or on food commodities vegetables, fruiting, group 8 at 5.0 ppm; okra at 5.0 ppm; persimmon at 1.9 ppm; horseradish at 4.0 ppm; rhubarb at 5.0 ppm; ginseng at 3.0 ppm; yam at 5.0 ppm; lupine at 0.1 ppm; lentil at 0.1 ppm; vegetable, cucurbit, group 9 at 5.0 ppm; and *Brassica*, head and stem, subgroup 5A at 5.0 ppm. An adequate residue analytical method (gas chromatography) is available for enforcement purposes. The method is listed in the Pesticide Analytical Manual (PAM) Vol. II (PAM II). Contact: Susan Stanton, telephone number: (703) 305–5218; e-mail address: *stanton.susan@epa.gov*.

5. *PP 7E7273*. (EPA–HQ–OPP–2007–1161). Interregional Research Project Number 4 (IR-4), 500 College Road East, Suite 201W, Princeton, NJ 08540, proposes to establish a tolerance for residues of the fungicide tetraconazole in or on food commodity grape at 0.15 ppm. Adequate enforcement methodology (capillary gas chromatography with electron capture detector (GC/ECD)) is available to enforce the tolerance expression. Contact: Susan Stanton, telephone number: (703) 305–5218; e-mail address: *stanton.susan@epa.gov*.

6. *PP 7F7176*. (EPA–HQ–OPP–2007–1076). Arysta LifeScience North America Corporation, 15401 Weston Parkway, Suite 150, Cary, NC 27513, proposes to establish tolerances for residues of the insecticide/miticide 3-dodecyl-1,4-dihydro-1,4-dioxo-2-naphthyl acetate and its metabolite 2-dodecyl-3-hydroxy-1,4-naphthoquinone expressed as acequinocyl equivalents in or on food commodities grapes at 7.0 ppm; grape juice at 0.05 ppm; and raisins at 0.1 ppm. The analytical method to quantitate residues of acequinocyl and acequinocyl-OH in/on fruit crops utilizes high pressure liquid chromatography (HPLC) using mass spectrometric (MS/MS) detection. The target limit of quantitation (LOQ) is 0.01 ppm. Contact: Marilyn Mautz, telephone number: (703) 305–6785; e-mail address: *mautz.marilyn@epa.gov*.

7. *PP 7F7226*. (EPA–HQ–OPP–2007–0506). Bayer CropScience, 2 T.W. Alexander Drive, P.O. Box 12014, Research Triangle Park, NC 27709, proposes to establish tolerances for residues of the insecticide cyfluthrin; cyano (4-fluoro-3-phenoxyphenyl)methyl-3-(2,2-dichloroethenyl)-2,2-dimethyl-cyclopropanecarboxylate in or on food commodities alfalfa, forage at 5.0 ppm and alfalfa, hay at 15.0 ppm. Adequate analytical methodology using gas chromatography/electron capture (GC/EC) detection is available for enforcement purposes. Contact: Olga Odiott, telephone number: (703) 308–9369; e-mail address: *odiott.olga@epa.gov*.

B. Amendment to Existing Tolerances

1. *PP 7E7235*. (EPA–HQ–OPP–2007–1069). Interregional Research Project Number 4 (IR-4), 500 College Road East, Suite 201W, Princeton, NJ 08540, proposes upon approval of the aforementioned tolerances (under Unit III. A.1), to remove the established

tolerances in 40 CFR 180.532 for the residues of the fungicide cyprodinil (4-cyclopropyl-6-methyl-N-phenyl-2-pyrimidinamine) in or on the food commodities herb subgroup 19A, fresh at 3.0 ppm; herb subgroup 19A, dried at 15.0 ppm; carrot at 0.75 ppm; and turnip, greens at 10.0 ppm. Contact: Shaja R. Brothers, telephone number: (703) 308–3194; e-mail address: *brothers.shaja@epa.gov*.

2. *PP 7E7270*. (EPA–HQ–OPP–2007–1106). Interregional Research Project Number 4 (IR-4), 500 College Road East, Suite 201W, Princeton, NJ 08540, proposes upon approval of the aforementioned tolerances (under Unit III. A.7), to remove the established tolerances in 40 CFR 180.275 for the residues of the fungicide chlorothalonil in or on the food commodities broccoli, Brussels sprouts, cabbage, cauliflower, cucumber, melon, nonbell pepper, pumpkin, summer squash, winter squash and tomato since the proposed tolerances on fruiting vegetables, cucurbit vegetables or *Brassica* head and stem vegetables would apply to these commodities. Contact: Susan Stanton, telephone number: (703) 305–5218; e-mail address: *stanton.susan@epa.gov*.

3. *PPs 0F6159 and 6F7070*. (EPA–HQ–OPP–2007–1021). Nichino America, Inc., 4550 New Linden Hill Road, Suite 501, Wilmington, DE 19808, proposes to amend the inadvertent or indirect tolerances in 40 CFR 180.484 by establishing increased tolerances for residues of the fungicide flutolanil [N-(3-(1-methylethoxy)phenyl)-2-(trifluoromethyl) benzamide] and its metabolite, M-4, desisopropylflutolanil [N-3(3-hydroxyphenyl)2-(trifluromethyl) benzamide] in or on the food commodities soybean forage at 9.0 ppm; soybean hay at 2.0 ppm; soybean seed at 0.20 ppm; wheat bran at 0.30 ppm; wheat forage at 2.0 ppm; wheat grain at 0.10 ppm; wheat hay at 1.0 ppm; wheat straw at 0.30 ppm; corn, field, forage at 0.30 ppm; corn, field, grain at 0.20 ppm; corn field, stover at 0.30 ppm; and cotton, undelinted seed at 0.20 ppm. Flutolanil and its metabolites are converted to 2-trifluoromethyl benzoic acid and calculated as flutolanil in the gas chromatography/mass spectrometry mass spectrometry (GC/MS MS) detection method used for soybean and wheat commodities. Flutolanil and M-4 are detected directly in the liquid chromatography/mass spectrometry (LC/MS) detection method used for corn and cotton. Contact: Lisa Jones, telephone number: (703) 308–9424; e-mail address: *jones.lisa@epa.gov*.

List of Subjects

Environmental protection, Agricultural commodities, Feed additives, Food additives, Pesticides and pests, Reporting and recordkeeping requirements.

Dated: January 14, 2008.

Donald R. Stubbs,

Acting Director, Registration Division, Office of Pesticide Programs.

[FR Doc. E8–1001 Filed 1–22–08; 8:45 am]

BILLING CODE 6560–50–S

ENVIRONMENTAL PROTECTION AGENCY

[EPA–HQ–OPPT–2005–0044; FRL–8098–9]

National Lead Laboratory Accreditation Program (NLLAP); Notice of Availability of Revisions to the NLLAP; Notice of Availability

AGENCY: Environmental Protection Agency (EPA).

ACTION: Notice.

SUMMARY: This notice announces the availability of the revised EPA National Lead Laboratory Accreditation Program (NLLAP) in the document titled ''Laboratory Quality System Requirements (LQSR) Revision 3.0'' dated July 5, 2007. Revisions to the LQSR include the expansion of NLLAP to cover: (1) Lead laboratory analysis programs that conduct lead analysis for the field (Field Sampling and Measurement Organizations), and (2) revised training requirements for laboratory personnel. The Agency will phase-in LQSR 3.0 over the next 18 months.

DATES: LQSR 3.0 will become effective July 23, 2009. In order to be recognized by the NLLAP, laboratories and accreditation organizations that currently administer the NLLAP may comply with the requirements of the LQSR 2.0 dated August 1, 1996, or LQSR 3.0 dated July 5, 2007. After, July 23, 2009 all NLLAP recognized organizations must implement and comply with the requirements of LQSR 3.0.

FOR FURTHER INFORMATION CONTACT: *For general information contact*: Colby Lintner, Regulatory Coordinator, Environmental Assistance Division (7408M), Office of Pollution Prevention and Toxics, Environmental Protection Agency, 1200 Pennsylvania Ave., NW., Washington, DC 20460–0001; telephone number: (202) 554–1404; e-mail address: *TSCA-Hotline@epa.gov*.

For technical information contact: Benjamin Lim, National Program Chemicals Division (7404T), Office of Pollution Prevention and Toxics, Environmental Protection Agency, 1200 Pennsylvania Ave., NW., Washington, DC 20460–0001; telephone number: (202) 566–0482; e-mail address: *Lim.Benjamin@epa.gov*.

SUPPLEMENTARY INFORMATION:

I. General Information

A. Does this Action Apply to Me?

You might potentially be affected by this action if you are or may be required to follow the Agency's regulations regarding testing for lead. Specifically, entities potentially affected by these revisions are Fixed-Site, Mobile, and Field Sampling and Measurement Organizations (FSMOs) that perform lead testing. Analytical testing laboratories currently recognized by the NLLAP, and accreditation organizations that currently administer the NLLAP (i.e., the American Industrial Hygiene Association (AIHA) and the American Association for Laboratory Accreditation (A2LA)) or other organizations that might seek a Memorandum of Understanding (MOU) with the Agency to become an accreditation organization could be affected by today's revisions. In addition, certified inspectors, certified risk assessors, developers, manufacturers, distributors of equipment and supplies used by FSMOs testing lead might also be affected by these revisions; and EPA-authorized state and tribal lead-based paint training and certification programs may also be affected by these revisions.

Other entities potentially affected by changes to the NLLAP for lead testing are the owners and managers of target housing and child-occupied facilities, as well as realtors, lessees, and residents, who ultimately pay for the testing services and stand to benefit by obtaining lead test results quicker.

Since other entities may also be interested, the Agency has not attempted to describe all of the specific entities that may be affected by this notice. If you have any questions regarding the applicability of this notice to a particular entity, consult the technical person listed under **FOR FURTHER INFORMATION CONTACT**.

B. How Can I Get Copies of this Document and Other Related Information?

1. *Docket*. Materials cited in this notice are available in docket number EPA–HQ–OPPT–2005–0044. All documents in the docket are listed in the regulations.gov index. To access the electronic docket, go to *http://*

www.regulations.gov, select ''Advanced Search,'' then ''Docket Search.'' Insert the docket ID number where indicated and select the ''Submit'' button. Follow the instructions on the regulations.gov website to view the docket index or access available documents. Although listed in the index, some information is not publicly available, e.g., Confidential Business Information (CBI) or other information whose disclosure is restricted by statute. Certain other material, such as copyrighted material, will be publicly available only in hard copy. Publicly available docket materials are available electronically at *http://www.regulations.gov*, or, if only available in hard copy, at the OPPT Docket. The OPPT Docket is located in the EPA Docket Center (EPA/DC) at Rm. 3334, EPA West Bldg., 1301 Constitution Ave., NW., Washington, DC. The EPA/DC Public Reading Room hours of operation are 8:30 a.m. to 4:30 p.m., Monday through Friday, excluding Federal holidays. The telephone number of the EPA/DC Public Reading Room is (202) 566–1744, and the telephone number for the OPPT Docket is (202) 566–0280. Docket visitors are required to show photographic identification, pass through a metal detector, and sign the EPA visitor log. All visitor bags are processed through an X-ray machine and subject to search. Visitors will be provided an EPA/DC badge that must be visible at all times in the building and returned upon departure.

2. *Electronic access*. You may access this **Federal Register** document electronically through the EPA Internet under the ''**Federal Register**'' listings at *http://www.epa.gov/fedrgstr/*. You may also access this document at the Office of Pollution Prevention and Toxics Lead Home Page at *http://www.epa.gov/lead/new.htm*.

II. Background

Under the Congressional mandate stated in section 405(b) of Title X, The Residential Lead-Based Paint Hazard Reduction Act of 1992, EPA has established the NLLAP. The program has been established by EPA in order to assure the public that analytical laboratories recognized by the EPA NLLAP have demonstrated they are capable of analyzing for lead in paint chip, dust, and/or soil samples. A list of EPA recognized lead laboratories is updated on a periodic basis and is available from the National Lead Information Center Clearinghouse upon request (1–800–424–LEAD) or at the Office of Pollution Prevention and Toxics Lead Home Page at *http://www.epa.gov/lead/pubs/nllap.htm*.

The Agency is announcing changes to NLLAP to encourage the recognition of all lead testing service providers (e.g., FSMOs) and to bring the NLLAP into compliance with current consensus standards (e.g., American Society for Testing and Materials (ASTM), American National Standards Institute (ANSI), and International Organization for Standardization (ISO)). This may, in turn, increase lead testing options, reduce costs, and save time for those who purchase analytical services related to lead hazard identification and control.

III. What Action is the Agency Taking?

The Agency made these revisions to the NLLAP to provide a vehicle and remove barriers so that all types of lead testing service providers could participate in the NLLAP. These changes also provide the tools for smaller lead testing organizations to obtain NLLAP recognition. Also these revisions are making the NLLAP more efficient and cost-effective while maintaining the high standard of quality, science and technology necessary to ensure public health protection in supporting EPA and U.S. Department of Housing and Urban Development (HUD) lead regulations.

List of Subjects

Environmental protection, Lead testing accreditation, National Lead Laboratory Accreditation Program (NLLAP), Laboratory Quality System Requirements (LQSR).

Dated: January 16, 2008.

James B. Gulliford,

Assistant Administrator, Office of Prevention, Pesticides and Toxic Substances.

[FR Doc. E8–1110 Filed 1–22–08; 8:45 am]

BILLING CODE 6560–50–S

ENVIRONMENTAL PROTECTION AGENCY

[EPA–HQ–OPP–2007–0038; FRL–8346–8]

Project Performance Corporation; Transfer of Data

AGENCY: Environmental Protection Agency (EPA).

ACTION: Notice.

SUMMARY: This notice announces that pesticide related information submitted to EPA's Office of Pesticide Programs (OPP) pursuant to the Federal Insecticide, Fungicide, and Rodenticide Act (FIFRA) and the Federal Food, Drug, and Cosmetic Act (FFDCA), including information that may have been claimed as Confidential Business Information (CBI) by the submitter, will be transferred to Project Performance Corporation in accordance with 40 CFR 2.307(h)(3) and 2.308(i)(2). Project Performance Corporation has been awarded a contract to perform work for OPP, and access to this information will enable Project Performance Corporation to fulfill the obligations of the contract.

DATES: Project Performance Corporation will be given access to this information on or before January 28, 2008.

FOR FURTHER INFORMATION CONTACT: Felicia Croom, Information Technology and Resources Management Division (7502P), Office of Pesticide Programs, Environmental Protection Agency, 1200 Pennsylvania Ave., NW., Washington, DC 20460–0001; telephone number: (703) 305–0786; e-mail address: *croom.felicia@epa.gov*.

SUPPLEMENTARY INFORMATION:

I. General Information

A. Does this Action Apply to Me?

This action applies to the public in general. As such, the Agency has not attempted to describe all the specific entities that may be affected by this action. If you have any questions regarding the applicability of this action to a particular entity, consult the person listed under **FOR FURTHER INFORMATION CONTACT**.

B. How Can I Get Copies of this Document and Other Related Information?

1. *Docket*. EPA has established a docket for this action under docket identification (ID) number EPA–HQ–OPP–2007–0038. Publicly available docket materials are available either in the electronic docket at *http://www.regulations.gov*, or, if only available in hard copy, at the Office of Pesticide Programs (OPP) Regulatory Public Docket in Rm. S–4400, One Potomac Yard (South Bldg.), 2777 S. Crystal Dr., Arlington, VA. The hours of operation of this Docket Facility are from 8:30 a.m. to 4 p.m., Monday through Friday, excluding legal holidays. The Docket Facility telephone number is (703) 305–5805.

2. *Electronic access*. You may access this **Federal Register** document electronically through the EPA Internet under the ''**Federal Register**'' listings at *http://www.epa.gov/fedrgstr*.

II. Contractor Requirements

Under Contract No. EP–W–05–023 Task Order 36, this contract shall provide enterprise architecture support to the Enterprise Architect for the Information Technology and Resources Management Division. The contractor

requires access to processes and procedures that may contain FIFRA and CBI related data.

This contract involves no subcontractors.

The OPP has determined that the contract described in this document involves work that is being conducted in connection with FIFRA, in that pesticide chemicals will be the subject of certain evaluations to be made under this contract. These evaluations may be used in subsequent regulatory decisions under FIFRA.

Some of this information may be entitled to confidential treatment. The information has been submitted to EPA under sections 3, 4, 6, and 7 of FIFRA and under sections 408 and 409 of FFDCA.

In accordance with the requirements of 40 CFR 2.307(h)(3), the contract with Project Performance Corporation, prohibits use of the information for any purpose not specified in this contract; prohibits disclosure of the information to a third party without prior written approval from the Agency; and requires that each official and employee of the contractor sign an agreement to protect the information from unauthorized release and to handle it in accordance with the *FIFRA Information Security Manual*. In addition, Project Performance Corporation is required to submit for EPA approval a security plan under which any CBI will be secured and protected against unauthorized release or compromise. No information will be provided to Project Performance Corporation until the requirements in this document have been fully satisfied. Records of information provided to Project Performance Corporation will be maintained by EPA Project Officers for this contract. All information supplied to Project Performance Corporation by EPA for use in connection with this contract will be returned to EPA when Project Performance Corporation has completed its work.

List of Subjects

Environmental protection, Business and industry, Government contracts, Government property, Security measures.

Dated: January 10, 2008.

Oscar Morales,

Acting Director, Office of Pesticide Programs.

[FR Doc. E8–809 Filed 1–22–08; 8:45 am]

BILLING CODE 6560–50–S

ENVIRONMENTAL PROTECTION AGENCY

[EPA–HQ–OPP–2007–1165; FRL–8346–2]

Chlorantraniliprole; Receipt of Application for Emergency Exemption, Solicitation of Public Comment

AGENCY: Environmental Protection Agency (EPA).

ACTION: Notice.

SUMMARY: EPA has received a specific exemption request from the Louisiana Department of Agriculture and Forestry to use the pesticide chlorantraniliprole (CAS No. 500008–45–7) to treat up to 160,000 acres of rice to control rice water weevil.

The applicant proposes the use of a new chemical which has not been registered by EPA. EPA is soliciting public comment before making the decision whether or not to grant the exemption.

DATES: Comments must be received on or before February 7, 2008.

ADDRESSES: Submit your comments, identified by docket identification (ID) number EPA–HQ–OPP–2007–1165, by one of the following methods:

- *Federal eRulemaking Portal*: *http://www.regulations.gov*. Follow the on-line instructions for submitting comments.
- *Mail*: Office of Pesticide Programs (OPP) Regulatory Public Docket (7502P), Environmental Protection Agency, 1200 Pennsylvania Ave., NW., Washington, DC 20460–0001.
- *Delivery*: OPP Regulatory Public Docket (7502P), Environmental Protection Agency, Rm. S–4400, One Potomac Yard (South Bldg.), 2777 S. Crystal Dr., Arlington, VA. Deliveries are only accepted during the Docket's normal hours of operation (8:30 a.m. to 4 p.m., Monday through Friday, excluding legal holidays). Special arrangements should be made for deliveries of boxed information. The Docket Facility telephone number is (703) 305–5805.

Instructions: Direct your comments to docket ID number EPA–HQ–OPP–2007–1165. EPA's policy is that all comments received will be included in the docket without change and may be made available on-line at *http://www.regulations.gov*, including any personal information provided, unless the comment includes information claimed to be Confidential Business Information (CBI) or other information whose disclosure is restricted by statute. Do not submit information that you consider to be CBI or otherwise protected through regulations.gov or e-mail. The regulations.gov website is an ''anonymous access'' system, which means EPA will not know your identity or contact information unless you provide it in the body of your comment. If you send an e-mail comment directly to EPA without going through regulations.gov, your e-mail address will be automatically captured and included as part of the comment that is placed in the docket and made available on the Internet. If you submit an electronic comment, EPA recommends that you include your name and other contact information in the body of your comment and with any disk or CD-ROM you submit. If EPA cannot read your comment due to technical difficulties and cannot contact you for clarification, EPA may not be able to consider your comment. Electronic files should avoid the use of special characters, any form of encryption, and be free of any defects or viruses.

Docket: All documents in the docket are listed in the docket index available in regulations.gov. To access the electronic docket, go to *http://www.regulations.gov*, select ''Advanced Search,'' then ''Docket Search.'' Insert the docket ID number where indicated and select the ''Submit'' button. Follow the instructions on the regulations.gov website to view the docket index or access available documents. Although listed in the index, some information is not publicly available, e.g., CBI or other information whose disclosure is restricted by statute. Certain other material, such as copyrighted material, is not placed on the Internet and will be publicly available only in hard copy form. Publicly available docket materials are available either in the electronic docket at *http://www.regulations.gov*, or, if only available in hard copy, at the OPP Regulatory Public Docket in Rm. S–4400, One Potomac Yard (South Bldg.), 2777 S. Crystal Dr., Arlington, VA. The hours of operation of this Docket Facility are from 8:30 a.m. to 4 p.m., Monday through Friday, excluding legal holidays. The Docket Facility telephone number is (703) 305–5805.

FOR FURTHER INFORMATION CONTACT: Marcel Howard, Registration Division (7505P), Office of Pesticide Programs, Environmental Protection Agency, 1200 Pennsylvania Ave., NW., Washington, DC 20460–0001; telephone number: (703) 305–6784; fax number: (703) 605–0781; e-mail address: *howard.marcel@epa.gov*.

SUPPLEMENTARY INFORMATION:

I. General Information

A. Does this Action Apply to Me?

You may be potentially affected by this action if you are an agricultural producer, food manufacturer, or pesticide manufacturer. Potentially affected entities may include, but are not limited to:

- Crop production (NAICS code 111).
- Animal production (NAICS code 112).
- Food manufacturing (NAICS code 311).
- Pesticide manufacturing (NAICS code 32532).

This listing is not intended to be exhaustive, but rather provides a guide for readers regarding entities likely to be affected by this action. Other types of entities not listed in this unit could also be affected. The North American Industrial Classification System (NAICS) codes have been provided to assist you and others in determining whether this action might apply to certain entities. To determine whether you or your business may be affected by this action, you should carefully examine the applicability provisions in Unit II. If you have any questions regarding the applicability of this action to a particular entity, consult the person listed under **FOR FURTHER INFORMATION CONTACT**.

B. What Should I Consider as I Prepare My Comments for EPA?

1. *Submitting CBI.* Do not submit this information to EPA through www.regulations.gov or e-mail. Clearly mark the part or all of the information that you claim to be CBI. For CBI information in a disk or CD-ROM that you mail to EPA, mark the outside of the disk or CD-ROM as CBI and then identify electronically within the disk or CD-ROM the specific information that is claimed as CBI. In addition to one complete version of the comment that includes information claimed as CBI, a copy of the comment that does not contain the information claimed as CBI must be submitted for inclusion in the public docket. Information so marked will not be disclosed except in accordance with procedures set forth in 40 CFR part 2.

2. *Tips for preparing your comments.* When submitting comments, remember to:

i. Identify the document by docket ID number and other identifying information (subject heading, **Federal Register** date and page number).

ii. Follow directions. The Agency may ask you to respond to specific questions or organize comments by referencing a Code of Federal Regulations (CFR) part or section number.

iii. Explain why you agree or disagree; suggest alternatives and substitute language for your requested changes.

iv. Describe any assumptions and provide any technical information and/or data that you used.

v. If you estimate potential costs or burdens, explain how you arrived at your estimate in sufficient detail to allow for it to be reproduced.

vi. Provide specific examples to illustrate your concerns and suggest alternatives.

vii. Explain your views as clearly as possible, avoiding the use of profanity or personal threats.

viii. Make sure to submit your comments by the comment period deadline identified.

II. What Action is the Agency Taking?

Under section 18 of the Federal Insecticide, Fungicide, and Rodenticide Act (FIFRA) (7 U.S.C. 136p), at the discretion of the Administrator, a Federal or State agency may be exempted from any provision of FIFRA if the Administrator determines that emergency conditions exist which require the exemption. The Louisiana Department of Agriculture and Forestry has requested the Administrator to issue a specific exemption for the use of chlorantraniliprole on rice seed to control rice water weevil. Information in accordance with 40 CFR part 166 was submitted as part of this request.

As part of this request, the Applicant asserts that rice water weevil infestations are becoming a severe pest problem in Louisiana. The favorable climatic conditions, abundant native habitat, persistent larvae population throughout growing season, and inadequate pest management options against the larvae of rice water weevil have allowed for the proliferation of this pest. In addition, the currently registered insecticides most effective against rice water weevil are highly toxic to crawfish, a major economic commodity of Louisiana co-cultivated in rice fields or adjacent to them. The use of chlorantraniliprole is justified by reference to the following factors: (1) The severity of the rice water weevil as a pest of rice in Louisiana; (2) the inadequacy of the insecticides currently registered for use in rice against rice water weevil; (3) the expected reduced negative impact on crawfish production; (4) efficacious demonstration against the larvae of rice water weevil; and 5) the potential for incidental control of minor, sporadic rice pests. Economic losses can occur due to the removal of root tissue in young rice plants by the larvae of rice water weevil, resulting in decreased grain yield at harvest. The Applicant states that significant economic losses will be suffered without the requested use.

The Applicant proposes to make no more than a single application of chlorantraniliprole per acre, at seeding, on maximum of 160,000 acres of rice in the state of Louisiana. Chlorantraniliprole will be applied to rice seeds at certified seed treatment facilities only. The use would begin after March 1, 2008 and end before August 1, 2008. A maximum of 6,875 gallons of formulated product (32,320 lbs. active ingredient) could be used under this exemption, if authorized.

This notice does not constitute a decision by EPA on the application itself. The regulations governing section 18 of FIFRA require publication of a notice of receipt of an application for a specific exemption proposing use of a new chemical (i.e., an active ingredient) which has not been registered by EPA. The notice provides an opportunity for public comment on the application.

The Agency will review and consider all comments received during the comment period in determining whether to issue the specific exemption requested by the Louisiana Department of Agriculture and Forestry.

List of Subjects

Environmental protection, Pesticides and pests.

Dated: January 4, 2008.

Daniel J. Rosenblatt,

Acting Director, Registration Division, Office of Pesticide Programs.

[FR Doc. E8–875 Filed 1–22–08; 8:45 am]

BILLING CODE 6560–50–S

FEDERAL RESERVE SYSTEM

Notice of Proposals To Engage in Permissible Nonbanking Activities or To Acquire Companies That Are Engaged in Permissible Nonbanking Activities

The companies listed in this notice have given notice under section 4 of the Bank Holding Company Act (12 U.S.C. 1843) (BHC Act) and Regulation Y (12 CFR Part 225) to engage *de novo*, or to acquire or control voting securities or assets of a company, including the companies listed below, that engages either directly or through a subsidiary or other company, in a nonbanking activity that is listed in § 225.28 of Regulation Y (12 CFR 225.28) or that the Board has determined by Order to be closely related to banking and permissible for

bank holding companies. Unless otherwise noted, these activities will be conducted throughout the United States.

Each notice is available for inspection at the Federal Reserve Bank indicated. The notice also will be available for inspection at the offices of the Board of Governors. Interested persons may express their views in writing on the question whether the proposal complies with the standards of section 4 of the BHC Act. Additional information on all bank holding companies may be obtained from the National Information Center website at *www.ffiec.gov/nic/*.

Unless otherwise noted, comments regarding the applications must be received at the Reserve Bank indicated or the offices of the Board of Governors not later than February 6, 2008.

A. Federal Reserve Bank of St. Louis (Glenda Wilson, Community Affairs Officer) 411 Locust Street, St. Louis, Missouri 63166–2034:

1. Evolve Financial Group, Inc., Cordova, Tennessee;, to acquire 100 percent of the voting shares of AFS Investment Advisors, Inc., Austin, Texas, and thereby engage in investment advisory activities, pursuant to section 225.28(b)(6)(i) of Regulation Y.

Board of Governors of the Federal Reserve System, January 17, 2008.

Robert deV. Frierson,

Deputy Secretary of the Board.

[FR Doc. E8–1080 Filed 1–22–08; 8:45 am]

BILLING CODE 6210–01–S

DEPARTMENT OF HEALTH AND HUMAN SERVICES

Office of the Secretary

Annual Update of the HHS Poverty Guidelines

AGENCY: Department of Health and Human Services.

ACTION: Notice.

SUMMARY: This notice provides an update of the HHS poverty guidelines to account for last calendar year's increase in prices as measured by the Consumer Price Index.

DATES: *Effective Date:* Date of publication, unless an office administering a program using the guidelines specifies a different effective date for that particular program.

ADDRESSES: Office of the Assistant Secretary for Planning and Evaluation, Room 404E, Humphrey Building, Department of Health and Human Services (HHS), Washington, DC 20201.

FOR FURTHER INFORMATION CONTACT: For information about how the guidelines are used or how income is defined in a particular program, contact the Federal, State, or local office that is responsible for that program. Contact information for two frequently requested programs is given below:

For information about the Hill-Burton Uncompensated Services Program (free or reduced-fee health care services at certain hospitals and other facilities for persons meeting eligibility criteria involving the poverty guidelines), contact the Office of the Director, Division of Facilities Compliance and Recovery, Health Resources and Services Administration, HHS, Room 10–105, Parklawn Building, 5600 Fishers Lane, Rockville, Maryland 20857. To speak to a person, call (301) 443–5656. To receive a Hill-Burton information package, call 1–800–638–0742 (for callers outside Maryland) or 1–800–492–0359 (for callers in Maryland). You also may visit *http://www.hrsa.gov/hillburton/default.htm.* The Division of Facilities Compliance and Recovery notes that as set by 42 CFR 124.505(b), the effective date of this update of the poverty guidelines for facilities obligated under the Hill-Burton Uncompensated Services Program is sixty days from the date of this publication.

For information about the percentage multiple of the poverty guidelines to be used on immigration forms such as USCIS Form I–864, Affidavit of Support, contact U.S. Citizenship and Immigration Services at 1–800–375–5283 or visit *http://www.uscis.gov/files/form/I-864p.pdf.*

For information about the number of people in poverty or about the Census Bureau poverty thresholds, visit the Poverty section of the Census Bureau's Web site at *http://www.census.gov/hhes/www/poverty.html* or contact the Census Bureau's Demographic Call Center Staff at (301) 763–2422 or 1–866–758–1060 (toll-free).

For general questions about the poverty guidelines themselves, contact Gordon Fisher, Office of the Assistant Secretary for Planning and Evaluation, Room 404E, Humphrey Building, Department of Health and Human Services, Washington, DC 20201—telephone: (202) 690–7507—or visit *http://www.aspe.hhs.gov/poverty/.*

SUPPLEMENTARY INFORMATION:

Background

Section 673(2) of the Omnibus Budget Reconciliation Act (OBRA) of 1981 (42 U.S.C. 9902(2)) requires the Secretary of the Department of Health and Human Services to update, at least annually, the poverty guidelines, which shall be used as an eligibility criterion for the Community Services Block Grant program. The poverty guidelines also are used as an eligibility criterion by a number of other Federal programs. The poverty guidelines issued here are a simplified version of the poverty thresholds that the Census Bureau uses to prepare its estimates of the number of individuals and families in poverty.

As required by law, this update is accomplished by increasing the latest published Census Bureau poverty thresholds by the relevant percentage change in the Consumer Price Index for All Urban Consumers (CPI–U). The guidelines in this 2008 notice reflect the 2.8 percent price increase between calendar years 2006 and 2007. After this inflation adjustment, the guidelines are rounded and adjusted to standardize the differences between family sizes. The same calculation procedure was used this year as in previous years. (Note that these 2008 guidelines are roughly equal to the poverty thresholds for calendar year 2007 which the Census Bureau expects to publish in final form in August 2008.) The guideline figures shown represent annual income.

2008 POVERTY GUIDELINES FOR THE 48 CONTIGUOUS STATES AND THE DISTRICT OF COLUMBIA

Persons in family	Poverty guideline
1	$10,400
2	14,000
3	17,600
4	21,200
5	24,800
6	28,400
7	32,000
8	35,600

For families with more than 8 persons, add $3,600 for each additional person.

2008 POVERTY GUIDELINES FOR ALASKA

Persons in family	Poverty guideline
1	$13,000
2	17,500
3	22,000
4	26,500
5	31,000
6	35,500
7	40,000
8	44,500

For families with more than 8 persons, add $4,500 for each additional person.

2008 POVERTY GUIDELINES FOR HAWAII

Persons in family	Poverty guideline
1	$11,960
2	16,100
3	20,240
4	24,380
5	28,520
6	32,660
7	36,800
8	40,940

For families with more than 8 persons, add $4,140 for each additional person.

Separate poverty guideline figures for Alaska and Hawaii reflect Office of Economic Opportunity administrative practice beginning in the 1966–1970 period. (Note that the Census Bureau poverty thresholds—the version of the poverty measure used for statistical purposes—have never had separate figures for Alaska and Hawaii.) The poverty guidelines are not defined for Puerto Rico or other outlying jurisdictions. In cases in which a Federal program using the poverty guidelines serves any of those jurisdictions, the Federal office that administers the program is generally responsible for deciding whether to use the contiguous-states-and-DC guidelines for those jurisdictions or to follow some other procedure.

Due to confusing legislative language dating back to 1972, the poverty guidelines have sometimes been mistakenly referred to as the ''OMB'' (Office of Management and Budget) poverty guidelines or poverty line. In fact, OMB has never issued the guidelines; the guidelines are issued each year by the Department of Health and Human Services. The poverty guidelines may be formally referenced as ''the poverty guidelines updated periodically in the **Federal Register** by the U.S. Department of Health and Human Services under the authority of 42 U.S.C. 9902(2).''

Some programs use a percentage multiple of the guidelines (for example, 125 percent or 185 percent of the guidelines), as noted in relevant authorizing legislation or program regulations. Non-Federal organizations that use the poverty guidelines under their own authority in non-federally-funded activities can choose to use a percentage multiple of the guidelines such as 125 percent or 185 percent.

The poverty guidelines do not make a distinction between farm and non-farm families, or between aged and non-aged units. (Only the Census Bureau poverty thresholds have separate figures for aged and non-aged one-person and two-person units.)

Note that this notice does not provide definitions of such terms as ''income'' or ''family.'' This is because there is considerable variation in how different programs that use the guidelines define these terms, traceable to the different laws and regulations that govern the various programs.

Therefore, questions about how a particular program applies the poverty guidelines (for example, Is income before or after taxes? Should a particular type of income be counted? Should a particular person be counted in the family or household unit?) should be directed to the organization that administers the program.

Dated: January 17, 2008.

Michael O. Leavitt,

Secretary of Health and Human Services.

[FR Doc. 08–256 Filed 1–18–08; 9:13 am]

BILLING CODE 4151–05–M

DEPARTMENT OF HEALTH AND HUMAN SERVICES

National Institute for Occupational Safety and Health; Decision To Evaluate a Petition To Designate a Class of Employees at Spencer Chemical Co., Jayhawks Works, Pittsburg, KS, To Be Included in the Special Exposure Cohort

AGENCY: National Institute for Occupational Safety and Health (NIOSH), Department of Health and Human Services (HHS).

ACTION: Notice.

SUMMARY: The Department of Health and Human Services (HHS) gives notice as required by 42 CFR 83.12(e) of a decision to evaluate a petition to designate a class of employees at Spencer Chemical Co., Jayhawks Works, Pittsburg, Kansas, to be included in the Special Exposure Cohort under the Energy Employees Occupational Illness Compensation Program Act of 2000. The initial proposed definition for the class being evaluated, subject to revision as warranted by the evaluation, is as follows:

Facility: Spencer Chemical Co., Jayhawks Works.

Location: Pittsburg, Kansas.

Job Titles and/or Job Duties: All employees.

Period of Employment: January 1, 1958 through December 31, 1963.

FOR FURTHER INFORMATION CONTACT: Larry Elliott, Director, Office of Compensation Analysis and Support, National Institute for Occupational Safety and Health (NIOSH), 4676 Columbia Parkway, MS C–46, Cincinnati, OH 45226, Telephone 513–533–6800 (this is not a toll-free number). Information requests can also be submitted by e-mail to *OCAS@CDC.GOV.*

Dated: January 15, 2008.

John Howard,

Director, National Institute for Occupational Safety and Health.

[FR Doc. E8–1031 Filed 1–22–08; 8:45 am]

BILLING CODE 4163–19–P

DEPARTMENT OF HEALTH AND HUMAN SERVICES

National Institute for Occupational Safety and Health; Determination Concerning a Petition To Add a Class of Employees to the Special Exposure Cohort

AGENCY: National Institute for Occupational Safety and Health (NIOSH), Department of Health and Human Services (HHS).

ACTION: Notice.

SUMMARY: The Department of Health and Human Services (HHS) gives notice of a determination concerning a petition to add a class of employees at the Y–12 Plant, Oak Ridge, Tennessee, to the Special Exposure Cohort (SEC) under the Energy Employees Occupational Illness Compensation Program Act of 2000 (EEOICPA), 42 U.S.C. 7384q. On December 14, 2007, the Secretary of HHS determined that the following employees do not meet the statutory criteria for addition to the SEC as authorized under EEOICPA:

Statisticians who performed statistical analysis of biological experiments (working within the Oak Ridge National Laboratory Biological Sciences Division) in all locations at the Y–12 Plant in Oak Ridge, Tennessee, who were employed by the Department of Energy or its contractors between January 1, 1958, and June 30, 1958.

FOR FURTHER INFORMATION CONTACT: Larry Elliott, Director, Office of Compensation Analysis and Support, National Institute for Occupational Safety and Health (NIOSH), 4676 Columbia Parkway, MS C–46, Cincinnati, OH 45226, Telephone 513–533–6800 (this is not a toll-free number). Information requests can also be submitted by e-mail to *OCAS@CDC.GOV.*

Dated: January 15, 2008.

John Howard,

Director, National Institute for Occupational, Safety and Health.

[FR Doc. E8–1033 Filed 1–22–08; 8:45 am]

BILLING CODE 4160–17–P

DEPARTMENT OF HEALTH AND HUMAN SERVICES

National Institute for Occupational Safety and Health

Final Effect of Designation of a Class of Employees for Addition to the Special Exposure Cohort

AGENCY: National Institute for Occupational Safety and Health (NIOSH), Department of Health and Human Services (HHS).

ACTION: Notice.

SUMMARY: The Department of Health and Human Services (HHS) gives notice concerning the final effect of the HHS decision to designate a class of employees at Nuclear Materials and Equipment Corporation (NUMEC) in Apollo, Pennsylvania, as an addition to the Special Exposure Cohort (SEC) under the Energy Employees Occupational Illness Compensation Program Act of 2000. On November 29, 2007, as provided for under 42 U.S.C. 7384q(b), the Secretary of HHS designated the following class of employees as an addition to the SEC:

Atomic Weapons Employer (AWE) employees who were monitored or should have been monitored for exposure to ionizing radiation while working at the Nuclear Materials and Equipment Corporation (NUMEC) in Apollo, Pennsylvania from January 1, 1957, through December 31, 1983, for a number of work days aggregating at least 250 work days or in combination with work days within the parameters established for one or more other classes of employees in the Special Exposure Cohort.

This designation became effective on December 29, 2007, as provided for under 42 U.S.C. 7384*l*(14)(C). Hence, beginning on December 29, 2007, members of this class of employees, defined as reported in this notice, became members of the Special Exposure Cohort.

FOR FURTHER INFORMATION CONTACT: Larry Elliott, Director, Office of Compensation Analysis and Support, National Institute for Occupational Safety and Health, 4676 Columbia Parkway, MS C–46, Cincinnati, OH 45226, Telephone 513–533–6800 (this is not a toll-free number). Information requests can also be submitted by e-mail to *OCAS@CDC.GOV*.

Dated: January 15, 2008.

John Howard,

Director, National Institute for Occupational Safety and Health.

[FR Doc. E8–1018 Filed 1–22–08; 8:45 am]

BILLING CODE 4160–17–P

DEPARTMENT OF HEALTH AND HUMAN SERVICES

Office of the Secretary

Findings of Scientific Misconduct

AGENCY: Office of the Secretary, HHS.

ACTION: Notice.

SUMMARY: Notice is hereby given that the Office of Research Integrity (ORI) and the Assistant Secretary for Health have taken final action in the following case:

Scott E. Monte, Huntington Memorial Hospital: Based on the findings of an investigation conducted by Huntington Memorial Hospital (HMH) and information obtained by the Office of Research Integrity (ORI) during its oversight review, the U.S. Public Health Service (PHS) found that Scott E. Monte, L.V.N., former Clinical Research Associate, HMH, engaged in scientific misconduct by knowingly and intentionally falsifying and fabricating clinical research records in HMH cancer prevention and treatment protocols supported by National Cancer Institute (NCI), National Institutes of Health (NIH), awards U10 CA69651, U10 CA12027, U10 CA32012, and U10 CA86004.

Specifically, Mr. Monte knowingly and intentionally:

(1) Entered falsified and fabricated laboratory data or physical examination results on five (5) research protocol case report forms (CRFs);

(2) Falsified a gynecological examination report in a physician's progress note and entered the falsified document in the patient's research chart; and

(3) Fabricated progress notes for four patients and a case report form for one of these patients.

ORI has implemented the following administrative actions for a period of three (3) years, beginning on January 7, 2008:

(1) Dr. Monte is debarred from any contracting or subcontracting with any agency of the United States Government and from eligibility or involvement in nonprocurement programs of the United States Government pursuant to HHS' implementation of the OMB Guidelines to Agencies on Governmentwide Debarment and Suspension at 2 CFR Part 376; and

(2) Dr. Monte is prohibited from serving in any advisory capacity to PHS, including but not limited to service on any PHS advisory committee, board, and/or peer review committee, or as a consultant.

FOR FURTHER INFORMATION CONTACT: Director, Division of Investigative Oversight, Office of Research Integrity, 1101 Wootton Parkway, Suite 750, Rockville, MD 20852, (240) 453–8800.

Chris B. Pascal,

Director, Office of Research Integrity.

[FR Doc. E8–1024 Filed 1–22–08; 8:45 am]

BILLING CODE 4150–31–P

DEPARTMENT OF HEALTH AND HUMAN SERVICES

Office of the National Coordinator for Health Information Technology (ONC), DHHS

Notice of Availability: Secretarial Recognition of Certain Healthcare Information Technology Standards Panel (HITSP) Interoperability Specifications as Interoperability Standards for Health Information Technology

AGENCY: Office of the National Coordinator for Health Information Technology (ONC), DHHS.

Authority: Executive Order 13335 (''Incentives for the Use of Health Information Technology and Establishing the Position of the National Health Information Technology Coordinator''), Executive Order 13410 (''Promoting Quality and Efficient Health Care in Federal Government Administered or Sponsored Health Care Programs''), Public Law 110–161, (''Consolidated Appropriations Act, 2008''), 42 U.S.C.1395nn(b)(4), 42 U.S.C. 1302(a), and 42 CFR 411.357(w).

SUMMARY: By publication of this document, we are informing the public of the Secretary's recognition of certain Healthcare Information Technology Standards Panel (HITSP) ''Interoperability Specifications'' as interoperability standards for health information technology. The Secretary accepted these HITSP ''Interoperability Specifications'', Version 1.2, in December of 2006, and hereby recognizes them as interoperability standards in updated versions in January of 2008. The list of recognized interoperability standards is provided below and is available at *http://www.hitsp.org*; click on ''HITSP Interoperability Specifications HERE'' box.

SUPPLEMENTARY INFORMATION: The Healthcare Information Technology Standards Panel (HITSP) was created in 2005 to serve as a cooperative partnership between the public and private sectors for the purpose of achieving a widely accepted and useful set of standards specifically to enable and support widespread interoperability

among healthcare software systems, as they will interact in a local, regional, and the Nationwide Health Information Network in the United States.

Under a contract with the Department of Health and Human Services, the American National Standards Institute (ANSI) established HITSP, following a neutral and inclusive governance model. The process was built by vendors, standards development organizations (SDOs), consumers, payers, providers, etc. HITSP is a multi-stakeholder organization involving more than 600 different healthcare industry organizations and technical experts whose activities to date on these Interoperability Specifications represent more than 20,000 volunteer hours of effort.

In March of 2006, HITSP was given three initial priority areas (use cases): Consumer Empowerment, Biosurveillance, and Laboratory Electronic Health Record Interoperability. HITSP converted those use cases into detailed requirements documents and examined more than 700 standards that would meet those requirements and assessed their readiness and appropriateness. From those 700 standards, HITSP identified 30 named standards, and produced detailed implementation guidance, ''constructs,'' that describe the specific transactions and use of these named standards. The Secretary therefore is recognizing the ''constructs'' associated with the as interoperability standards to clarify the intended use and application of the ''named standards''.

On October 31, 2006, HITSP presented to the American Health Information Community (AHIC) three sets of Interoperability Specifications. The AHIC is a Federal Advisory Committee Act (FACA) advisory body, chartered in 2005 to make recommendations to the Secretary on methods for accelerating the development and adoption of health information technology. At the October 31, 2006, AHIC meeting, the members discussed the HITSP Interoperability Specifications and made the consensus recommendation that the Interoperability Specifications be recognized by the Secretary. Secretary Leavitt accepted these Interoperability Specifications in December 2006 with the intent to recognize them one year later, presuming that any changes would be minimal, reflecting public comment and/or of a minor and technical nature. On March 1, 2007, the Department published a Notice in the **Federal Register** (72 FR 9339) announcing the Secretary's acceptance and planned recognition of certain interoperability specifications.

The HITSP Panel approved the subsequent version of the interoperability specifications on May 11, 2007. No additional constructs or standards were added as a result of implementation testing feedback. All changes were minor or of a technical nature to the implementation guidance. On June 12, 2007, HIC presented to Secretary Leavitt these completed Interoperability Specifications, including 28 of 30 completely balloted named standards and implementation guidance in the form of constructs. As detailed below, in December 2007, one of the two outstanding named standards passed ballot by its SDO; after the designated 6-month waiting period, this named standard and two associated constructs will achieve full recognition status by the Secretary in June 2008 by the Secretary. The final standard is still under ballot.

The three high level groupings of these interoperability standards are as follows.

I. Electronic Health Record (EHR) Laboratory Results Reporting

The purpose of the EHR interoperability specification is to allow ordering clinicians to electronically access laboratory results, and to allow non-ordering authorized clinicians to electronically access historical and other laboratory results for clinical care. The recognized version of the standard addresses the lack of harmonization among data interoperability standards including vocabulary and laboratory and other messaging standards; it also accommodates both laboratory message transaction and document-sharing paradigms. In addition, a laboratory message implementation guide has been completed to meet AHIC use case requirements. The EHR specification is complete and includes all of the implementation guidance necessary to implement and the final balloted work products of all the standards development organizations involved, with one caveat. The messaging standard for laboratories, HL–7 2.5.1, passed ballot in December 2007, with final implementation guidance to be incorporated into the HITSP specifications. This standard, along with an associated construct, the Lab Result Message Component (C36) will achieve full recognition status by the Secretary in June 2008.

The interoperability standards—Interoperability Specification including Constructs (Components, Transactions, and Transaction Packages) and Named Standards associated with EHR are listed below.

Interoperability Specification Constructs (Components (C), Transactions (T), and Transaction Packages (TP)) for EHR

- EHR Lab Reporting Interoperability Specification (HITSP V2.1 2007 IS01).
- Lab Result Terminology Component (HITSP V2.0 2007 C35).
- Lab Report Document Component (HITSP V2.0 2007 C37).
- Secure Web Connection Component (HITSP V2.0 2007 C44).
- View Lab Result From Web App Transaction (HITSP V2.0 2007 T18).
- Patient Demographics Query Transaction (HITSP V2.0 2007 T23).
- Notification of Document Availability Transaction (HITSP V2.0 2007 T29).
- Manage Sharing of Documents Transaction Package (HITSP V2.2 2007 TP13).
- Send Lab Result Message Transaction Package (HITSP V2.1 2007 TP14).
- Patient ID Cross-Referencing Transaction Package (HITSP V2.0 2007 TP22).

Named Standards for EHR

- Portions of the Clinical Laboratory Improvement Amendments (CLIA) of 1988 (42 CFR part 493).
- Portions of the Health Insurance Portability and Accountability Act of 1996 (HIPAA)—Administrative Simplification.
- Health Level Seven (HL7) Version 2.5.
- Health Level Seven (HL7) Version 2.5/2.5.1.
- Health Level Seven (HL7) Version 3.0 Clinical Document Architecture (CDA/CDA R2).
- Hypertext Transfer Protocol Secure (HTTPS) 443/tcp.
- Integrating the Healthcare Enterprise (IHE) IT Infrastructure Technical Framework (ITI–TF) Revision 3.0.
- Integrating the Healthcare Enterprise (IHE) IT Infrastructure Technical Framework (ITI–TF) Revision 4.0.
- Integrating the Healthcare Enterprise (IHE) IT Infrastructure Technical Framework (ITI–TF) Revision 4.0—Registry Stored Query Transaction for XDS Profile Supplement.
- Integrating the Healthcare Enterprise (IHE) IT Infrastructure Technical Framework (ITI–TF) Revision 4.0 XCA Supplement.
- Integrating the Healthcare Enterprise (IHE) IT Infrastructure Technical Framework (TF)

Supplement—ITI–25 Notification of Document Availability (NAV) June 28, 2005.

• Integrating the Healthcare Enterprise (IHE) Laboratory Technical Framework Supplement 2006–2007 Revision 1.0.

• International Health Terminology Standards Development Organisation (IHTSDO) Systematized Nomenclature of Medicine Clinical Terms (SNOMED CT®).

• International Organization for Standardization (ISO) Electronic business eXtensible Markup Language (ebXML), Technical Specification # 15000—Part 4: Registry services specification (ebRS), May, 2004.

• Logical Observation Identifiers Names and Codes (LOINC®).

• Unified Code for Units of Measure (UCUM).

II. Biosurveillance (BIO)

The purpose of the BIO interoperability specification is to transmit essential ambulatory care and emergency department visit, utilization, and laboratory result data from electronically enabled healthcare delivery and public health systems in standardized and anonymized format to authorized Public Health Agencies with less than one day lag time. The BIO specification is complete and includes all of the implementation guidance necessary to implement and the final balloted work products of all the standards development organizations involved, with two exceptions. The messaging standard for laboratories, HL–7 2.5.1, passed ballot in December 2007, with final implementation guidance to be incorporated into the HITSP specifications. This standard, along with two associated constructs, the Lab Result Message Component (C36) and the Resource Utilization Component (C47), will achieve full recognition status by the Secretary in June 2008. The Hospital Availability Exchange Standard (HAVE) is still under the SDO ballot process.

The interoperability standards—Interoperability Specification including Constructs (Components, Transactions, and Transaction Packages) and Named Standards associated with BIO are listed below.

Interoperability Specification Constructs (Components (C), Transactions (T), and Transaction Packages (TP)) for BIO

• Biosurveillance Interoperability Specification (HITSP V2.1 2007 IS02).

• Anonymize Component (HITSP V2.1 2007 C25).

• Lab Result Terminology Component (HITSP V2.0 2007 C35).

• Lab Report Document Component (HITSP V2.0 2007 C37).

• Encounter Message Component (HITSP V2.0 2007 C39).

• Radiology Result Message Component (HITSP V2.0 2007 C41).

• Encounter Document Component (HITSP V2.1 2007 C48).

• Pseudonymize Transaction (HITSP V2.1 2007 T24).

• Notification of Document Availability Transaction (HITSP V2.0 2007 T29).

• Manage Sharing of Documents Transaction Package (HITSP V2.2 2007 TP13).

• Patient ID Cross-Referencing Transaction Package (HITSP V2.0 2007 TP22).

• Sharing Radiology Results Transaction Package (HITSP V2.0 2007 TP49).

• Retrieve Form for Data Capture Transaction Package (HITSP V2.1 2007 TP50).

Named Standards for BIO:

• American Medical Association (AMA) Current Procedural Terminology (CPT®) Fourth Edition (CPT–4).

• Clinical Care Classification (CCC) Version 2.0 [formerly known as the Home Healthcare Classification (HHCC) System].

• Portions of the Clinical Laboratory Improvement Amendments (CLIA) of 1988 (42 CFR part 493).

• Digital Imaging and Communications in Medicine (DICOM) Attribute Level Confidentiality Supplement: # 55.

• Federal Information Processing Standards (FIPS) Codes for the Identification of the States, the District of Columbia and the Outlying Areas of the United States, and Associated Areas Publication # 5–2, May, 1987.

• Portions of the Health Insurance Portability and Accountability Act of 1996 (HIPAA)—Administrative Simplification.

• Health Level Seven (HL7) Version 2.5.

• Health Level Seven (HL7) Version 2.5/2.5.1.

• Health Level Seven (HL7) Version 3.0.

• Health Level Seven (HL7) Version 3.0 Clinical Document Architecture (CDA/CDA R2).

• Healthcare Common Procedure Coding System (HCPCS) Level II Code Set.

• Integrating the Healthcare Enterprise (IHE) IT Infrastructure Technical Framework (ITI–TF) Revision 3.0.

• Integrating the Healthcare Enterprise (IHE) IT Infrastructure Technical Framework (ITI–TF) Revision 4.0.

• Integrating the Healthcare Enterprise (IHE) IT Infrastructure Technical Framework (ITI–TF) Revision 4.0—Registry Stored Query Transaction for XDS Profile Supplement.

• Integrating the Healthcare Enterprise (IHE) IT Infrastructure Technical Framework (ITI–TF) Revision 4.0 XCA Supplement.

• Integrating the Healthcare Enterprise (IHE) IT Infrastructure Technical Framework (TF) Supplement—ITI–25 Notification of Document Availability (NAV) June 28, 2005.

• Integrating the Healthcare Enterprise (IHE) IT Infrastructure Technical Framework (TF) Supplement—Retrieve Form for Data Capture (RFD) Sept 25, 2006.

• Integrating the Healthcare Enterprise (IHE) Laboratory Technical Framework Supplement 2006–2007 Revision 1.0.

• Integrating the Healthcare Enterprise (IHE) Patient Care Coordination (PCC) Technical Framework Revision 3.0.

• Integrating the Healthcare Enterprise (IHE) Radiology Technical Framework Revision 7.0.

• International Classification of Diseases, 10th Revision, Procedure Coding System (ICD–10–CS).

• International Classification of Diseases, 10th Revision, Related Health Problems (ICD–10–CM).

• International Classification of Diseases, 9th Revision, Clinical Modifications (ICD–9–CM).

• International Health Terminology Standards Development Organisation (IHTSDO) Systematized Nomenclature of Medicine Clinical Terms (SNOMED CT®).

• International Organization for Standardization (ISO) Health informatics—Pseudonymization, Unpublished Technical Specification # 25237.

• International Organization for Standardization (ISO) Electronic business eXtensible Markup Language (ebXML), Technical Specification # 15000—Part 4: Registry services specification (ebRS), May, 2004.

• Logical Observation Identifiers Names and Codes (LOINC®).

• National Library of Medicine (NLM) Unified Medical Language System (UMLS) RxNorm.

• National Uniform Billing Committee (NUBC) Uniform Bill Version 1992 (UB–92) Current UB Data Specification Manual Field 22, Patient Discharge Status, Codes.

• Organization for the Advancement of Structured Information Standards

(OASIS) Emergency Data Exchange Language (EDXL) Distribution Element (DE).

• Unified Code for Units of Measure (UCUM).

III. Consumer Empowerment (CE)

The purpose of the CE interoperability specification is to allow consumers to establish and manage permissions access, rights, and informed consent for authorized and secure exchange, viewing, and querying of their linked patient registration summaries and medication histories between designated caregivers and other health professionals. The CE specification is complete and includes all of the implementation guidance necessary to implement and the final balloted work products of all the standards development organizations involved.

The interoperability standards—Interoperability Specification including Constructs (Components, Transactions, and Transaction Packages) and Named Standards associated with CE are listed below.

Interoperability Specification Constructs (Components (C), Transactions (T), and Transaction Packages (TP)) for CE

• Consumer Empowerment Interoperability Specification (HITSP V2.1 2007 IS03).

• Summary Documents Using CCD Component (HITSP V2.1 2007 C32).

• Patient Demographics Query Transaction (HITSP V2.0 2007 T23).

• Manage Sharing of Documents Transaction Package (HITSP V2.2 2007 TP13).

• Patient ID Cross-Referencing Transaction Package (HITSP V2.0 2007 TP22).

Named Standards for CE

• Accredited Standards Committee (ASC) X12 Insurance Subcommittee (X12N) Implementation Guides Version 004010 plus Addenda 004010A1.

• Accredited Standards Committee (ASC) X12 Standards Release 004010.

• American Society for Testing and Materials (ASTM) Standard Specification for Coded Values Used in the Electronic Health Record: # E1633–02.

• American Society for Testing and Materials (ASTM) Standard Specification for Continuity of Care Record (CCR): # E2369–05.

• CDC Race and Ethnicity Code Sets.

• Council for Affordable Quality Health Care (CAQH) Committee on Operating Rules for Information Exchange (CORE) Phase I Operating Rules.

• Federal Medication Terminologies.

• Health Care Provider Taxonomy.

• Health Level Seven (HL7) EHR System Functional Model Draft Standard for Trial Use (DSTU).

• Health Level Seven (HL7) Version 2.5.

• Health Level Seven (HL7) Version 2.5/2.5.1.

• Health Level Seven (HL7) Version 3.0.

• Health Level Seven (HL7) Version 3.0 Clinical Document Architecture (CDA/CDA R2).

• HL7 Implementation Guide: CDA Release 2—Continuity of Care Document (CCD), Release 1.0, April 1, 2007.

• Integrating the Healthcare Enterprise (IHE) IT Infrastructure Technical Framework (ITI–TF) Revision 3.0.

• Integrating the Healthcare Enterprise (IHE) IT Infrastructure Technical Framework (ITI–TF) Revision 4.0.

• Integrating the Healthcare Enterprise (IHE) IT Infrastructure Technical Framework (ITI–TF) Revision 4.0—Registry Stored Query Transaction for XDS Profile Supplement.

• Integrating the Healthcare Enterprise (IHE) IT Infrastructure Technical Framework (ITI–TF) Revision 4.0 XCA Supplement.

• Integrating the Healthcare Enterprise (IHE) Patient Care Coordination (PCC) Technical Framework Revision 3.0.

• International Organization for Standardization (ISO) Electronic business eXtensible Markup Language (ebXML), Technical Specification # 15000—Part 4: Registry services specification (ebRS), May, 2004.

• Logical Observation Identifiers Names and Codes (LOINC®).

• National Council for Prescription Drug Programs (NCPDP) SCRIPT Standard Version 8.1.

• Revisions to the Standards for the Classification of Federal Data on Race and Ethnicity.

We recognize that certain legal obligations may flow from the recognition of these interoperability standards. First, pursuant to Executive Order 13410 (EO 13410) dated August 22, 2006, recognition of interoperability standards would require each Federal health agency, as it implements, acquires, or upgrades health information technology systems used for the direct exchange of health information between agencies and with non-Federal entities, to ''utilize, where available, health information technology systems and products that meet interoperability standards recognized by the Secretary.'' Therefore, Federal agencies would be required to appropriately consider health information technology systems and products that comply with these Interoperability Specifications when purchasing, implementing, or upgrading such items.

Similarly, the EO 13410 directs Federal agencies to contractually require, to the extent permitted by law, certain entities with whom they do business, to use, where available, health information technology systems and products that meet recognized interoperability standards.

In addition, the regulations promulgated on August 8, 2006 (see 71 FR 45140 and 71 FR 45110) established exceptions and safe harbors to the physician self-referral law and the anti-kickback statute, respectively, for certain arrangements involving the donation of electronic prescribing and electronic health records (EHR) technology and services. The EHR exception and safe harbor require that the software be ''interoperable'' as defined in the regulations. The rules also provide that certain software will be deemed to be ''interoperable'' if that software has been certified by a certifying body recognized by the Secretary within 12 months prior to the donation. Under the interim guidance for the recognition of certifying bodies published by the ONC (''Office of the National Coordinator for Health Information Technology (ONC) Interim Guidance Regarding the Recognition of Certification Bodies''), for an organization to be recognized as a recognized certifying body (RCB), the organization must:

Have in place a demonstrated process for and experience in certifying products to be in compliance with criteria recognized by the Secretary;

Have a method by which they can incorporate all applicable standards and certification criteria recognized by the Secretary into their certification processes; and

Have the ability to adapt their processes to emerging certification criteria recognized by the Secretary.

The RCBs would therefore have to certify such products in conformity with, among other provisions, these interoperability specifications for the certified products to meet the interoperability deeming provisions of the physician self-referral exception and anti-kickback safe harbor, respectively.

The Secretary is mindful that the ability of software to be interoperable evolves as technology develops. Consequently, if an enforcement action is initiated for an allegedly improper donation of EHR non-certified software,

the Secretary would review whether the software was interoperable, as defined in the regulations. The Secretary would consider the prevailing state of technology at the time the items or services were provided to the recipient. As explained in the regulations, the Secretary understands that parties should have a reasonable basis for determining whether the EHR software is interoperable. We therefore indicated that ''it would be appropriate—and, indeed, advisable—for parties to consult any standards and criteria related to interoperability recognized by the Department.''

Compliance with these standards and criteria, as we explained in the regulations, ''will provide greater certainty to donors and recipients that products meet the interoperability requirement, and may be relevant in an enforcement action.''

Based on the changing nature of technological development noted above, the Secretary has accepted and recognized these Interoperability Specifications. He has also delegated authority to ONC to coordinate and oversee the incorporation of these Interoperability Specifications in relevant activities among Federal agencies and other partner organizations, as appropriate.

FOR FURTHER INFORMATION CONTACT: Judith Sparrow at (202) 690–7151.

Dated: January 17, 2008.

Robert M. Kolodner,

National Coordinator for Health Information Technology, Office of the National Coordinator for Health Information Technology.

[FR Doc. 08–234 Filed 1–17–08; 1:18pm]

BILLING CODE 4150–45–P

DEPARTMENT OF HEALTH AND HUMAN SERVICES

Centers for Disease Control and Prevention

[30Day–08–05CZ]

Agency Forms Undergoing Paperwork Reduction Act Review

The Centers for Disease Control and Prevention (CDC) publishes a list of information collection requests under review by the Office of Management and Budget (OMB) in compliance with the Paperwork Reduction Act (44 U.S.C. Chapter 35). To request a copy of these requests, call the CDC Reports Clearance Officer at (404) 639–5960 or send an e-mail to *omb@cdc.gov*. Send written comments to CDC Desk Officer, Office of Management and Budget, Washington, DC or by fax to (202) 395–6974. Written comments should be received within 30 days of this notice.

Proposed Project

Assessing the Diabetes Detection Initiative for Policy Decisions—New—National Center for Chronic Disease Prevention and Health Promotion (NCCDPHP), Centers for Disease Control and Prevention (CDC).

Background and Brief Description

Type II diabetes is a chronic disease that affects more than 18 million Americans, approximately 5 million of whom do not know that they have the disease. As the disease progresses, it often causes severe complications, including heart disease, blindness, lower extremity arterial disease, and kidney failure. American Indians, African Americans, Latino Americans, and some Asian Americans and Pacific Islanders are disproportionately affected by diabetes. Identifying persons who have undiagnosed diabetes and treating them could prevent or delay diabetes complications.

In November 2003 the Diabetes Detection Initiative (DDI) was launched in 10 regional locations around the U.S. to identify a portion of the estimated 5 million people with undiagnosed Type II diabetes. The DDI was designed to refer persons at increased risk of Type II diabetes to diagnostic testing, and if appropriate, to follow-up treatment. Whether or not the DDI should be expanded to other communities depends on the health benefit and costs of the program. The CDC plans to conduct a one-year study to provide this critical information.

The planned information collection will assess the resources used, the cost per case detected, and the perceived benefit of the DDI to patients. Information for the assessment will be obtained by conducting the following surveys: (1) A health clinic leadership survey will be completed by the clinic director or representative of each of the 43 clinics that participated in the DDI. The survey will obtain information on all activities and resources used at the clinic level related to diabetes screening, detection, and outreach services. Approximately 30 of the 43 eligible clinics are expected to participate in the survey. (2) A patient survey will be administered to a sample of 600 patients from the participating clinics. The survey will collect information about each patient's background and out-of-pocket medical and non-medical direct health care costs (e.g., co-payments, transportation costs, and the value of the patient's time associated with clinic visits). The DDI Patient Survey will include a computer-assisted personal interview (CAPI) module to collect information about each patient's stated preferences with respect to diabetes screening options.

The results of the study will also provide information needed for evaluating the long-term cost-effectiveness of screening for undiagnosed diabetes in the United States.

There are no costs to the respondents other than their time. The total estimated annualized burden hours are 263.

ESTIMATED ANNUALIZED BURDEN HOURS

Type of respondents	Form name	Number of respondents	Number of responses per respondent	Average burden (in hours)
DDI Clinic Representatives	DDI Health Clinic Leadership Survey	30	1	1
Patients at DDI Clinics	Screening Questions for the DDI Patient Survey	1,000	1	2/60
	DDI Patient Survey	600	1	20/60

Dated: January 10, 2008.

Maryam I. Daneshvar,

Acting Reports Clearance Officer, Centers for Disease Control and Prevention.

[FR Doc. E8–1016 Filed 1–22–08; 8:45 am]

BILLING CODE 4163–18–P

DEPARTMENT OF HEALTH AND HUMAN SERVICES

Centers for Disease Control and Prevention

[30Day–08–06AP]

Agency Forms Undergoing Paperwork Reduction Act Review

The Centers for Disease Control and Prevention (CDC) publishes a list of information collection requests under review by the Office of Management and Budget (OMB) in compliance with the Paperwork Reduction Act (44 U.S.C. Chapter 35). To request a copy of these requests, call the CDC Reports Clearance Officer at (404) 639–5960 or send an e-mail to *omb@cdc.gov*. Send written comments to CDC Desk Officer, Office of Management and Budget, Washington, DC or by fax to (202) 395–6974. Written comments should be received within 30 days of this notice.

Proposed Project

Aerosol Generation by Cough—NEW—The National Institute for Occupational Safety and Health (NIOSH), Centers for Disease Control and Prevention (CDC).

Background and Brief Description

The National Institute for Occupational Safety and Health (NIOSH) is authorized to conduct research to advance the health and safety of workers under Section 20(a)(1) of the 1970 Occupational Safety and Health Act.

Many respiratory diseases are spread when healthy people come into contact with infectious fluids from sick individuals. The most common mode of transmission is direct contact with infected persons, or contact with items or people they have touched. In addition, however, some respiratory illnesses can also spread via infectious aerosols that are generated by coughing and sneezing. Riley *et al.* established that tuberculosis is spread by inhalation of respirable particles generated by infected individuals. British studies of classrooms and offices found aerosols containing viable salivary streptococci and other oral bacteria that were thought to be created during speaking, coughing, and sneezing. Severe acute respiratory syndrome (SARS) and avian influenza are known to spread through infectious aerosols, and this may include cough-generated aerosols as well.

The airborne transmission of disease is of great concern to the public health community because of the increasing prevalence of drug-resistant strains of tuberculosis, the epidemic potential of newly-emerging diseases like avian influenza, and the threat of bioterrorism using agents such as bubonic plague. The purpose of this project is to better understand some of the factors involved in the production of aerosols of airway fluids by coughing. The project has two specific aims: Measure the quantity and size distribution of aerosol produced during human coughs and determine the effectiveness of surgical masks and N95 respirators at filtering cough-generated aerosols.

There is no cost to respondents other than their time. The total estimated annualized burden hours are 71.

ESTIMATED ANNUALIZED BURDEN HOURS

Type of respondent	Form	Number of respondents	Number of responses per respondent	Average burden per response (in hours)
All participants	Pre-test questionnaire	147	1	5/60
Qualified participants	Health questionnaire	140	1	5/60
	Consent form	140	1	20/60

Dated: January 10, 2008.

Maryam Daneshvar,

Acting Reports Clearance Officer, Centers for Disease Control and Prevention.

[FR Doc. E8–1017 Filed 1–22–08; 8:45 am]

BILLING CODE 4163–18–P

DEPARTMENT OF HEALTH AND HUMAN SERVICES

National Institutes of Health

Center for Scientific Review; Amended Notice of Meeting

Notice is hereby given of a change in the meeting of the Center for Scientific Review Special Emphasis Panel, February 13, 2008, 1 p.m. to February 13, 2008, 4:30 p.m., National Institutes of Health, 6701 Rockledge Drive, Bethesda, MD, 20892 which was published in the **Federal Register** on January 9, 2008, 73 FR 1634–1637.

The meeting will be held February 14, 2008. The meeting time and location remains the same. The meeting is closed to the public.

Dated: January 15, 2008.

Jennifer Spaeth,

Director, Office of Federal Advisory Committee Policy.

[FR Doc. 08–219 Filed 1–22–08; 8:45 am]

BILLING CODE 4140–01–M

DEPARTMENT OF HEALTH AND HUMAN SERVICES

National Institutes of Health

Center for Scientific Review; Notice of Closed Meetings

Pursuant to section 10(d) of the Federal Advisory Committee Act, as amended (5 U.S.C. Appendix 2), notice is hereby given of the following meetings.

The meetings will be closed to the public in accordance with the provisions set forth in sections 552b(c)(4) and 552b(c)(6), Title 5 U.S.C., as amended. The grant applications and the discussions could disclose confidential trade secrets or commercial property such as patentable material, and personal information concerning individuals associated with the grant applications, the disclosure of which would constitute a clearly unwarranted invasion of personal privacy.

Name of Committee: Biology of Development and Aging Integrated Review Group, Cellular Mechanisms in Aging and Development Study Section.

Date: February 5–6, 2008.

Time: 8 a.m. to 5 p.m.

Agenda: To review and evaluate grant applications.

Place: Sir Francis Drake Hotel, Kimpton, 450 Powell Street, San Francisco, CA 94102.

Contact Person: James P. Harwood, PhD, Scientific Review Administrator, Center for Scientific Review, National Institutes of

Health, 6701 Rockledge Drive, Room 5168, MSC 7840, Bethesda, MD 20892, 301–435–1256, *harwoodj@csr.nih.gov.*

Name of Committee: Health of the Population Integrated Review Group, Nursing Science: Children and Families Study Section.
Date: February 7, 2008.
Time: 8 a.m. to 5 p.m.
Agenda: To review and evaluate grant applications.
Place: Bethesda Marriott, 5151 Pooks Hill Road, Bethesda, MD 20814.
Contact Person: Melinda Tinkle, PhD, Scientific Review Administrator, Center for Scientific Review, National Institutes of Health, 6701 Rockledge Drive, Room 3141, MSC 7770, Bethesda, MD 20892, 301–594–6594, *tinklem@csr.nih.gov.*

Name of Committee: Cell Biology Integrated Review Group, Intercellular Interactions Study Section.
Date: February 7–8, 2008.
Time: 8 a.m. to 5 p.m.
Agenda: To review and evaluate grant applications.
Place: Renaissance Washington, DC Hotel, 999 Ninth Street, NW., Washington, DC 20001.
Contact Person: David Balasundaram, PhD, Scientific Review Administrator, Center for Scientific Review, National Institutes of Health, 6701 Rockledge Drive, Room 5189, MSC 7840, Bethesda, MD 20892, 301–435–1022, *balasundaramd@csr.nih.gov.*

Name of Committee: Health of the Population Integrated Review Group, Health Services Organization and Delivery Study Section.
Date: February 7–8, 2008.
Time: 8:30 a.m. to 6 p.m.
Agenda: To review and evaluate grant applications.
Place: Hyatt Regency Reston, Reston Town Center, 1800 Presidents Street, Reston, VA 20190.
Contact Person: Kathy Salaita, SCD, Scientific Review Administrator, Center for Scientific Review, National Institutes of Health, 6701 Rockledge Drive, Room 3172, MSC 7770, Bethesda, MD 20892, 301–451–8504, *salaitak@csr.nih.gov.*

Name of Committee: Health of the Population Integrated Review Group, Neurological, Aging and Musculoskeletal Epidemiology Study Section.
Date: February 12–13, 2008.
Time: 8:30 a.m. to 4 p.m.
Agenda: To review and evaluate grant applications.
Place: Renaissance Harborplace Hotel, 202 East Pratt Street, Baltimore, MD 21202.
Contact Person: Heidi B. Friedman, PhD, Scientific Review Officer, Center for Scientific Review, National Institutes of Health, 6701 Rockledge Drive, Room 1012A, MSC 7770, Bethesda, MD 20892, 301–435–1721, *hfriedman@csr.nih.gov.*

Name of Committee: Genes, Genomes, and Genetics Integrated Review Group, Molecular Gentics C Study Section.
Date: February 12–13, 2008.
Time: 8:30 a.m. to 3 p.m.
Agenda: To review and evaluate grant applications.
Place: Lombardy Hotel, 2019 Pennsylvania Avenue, NW., Washington, DC 20006.
Contact Person: Barbara Whitmarsh, PhD, Scientific Review Administrator, Center for Scientific Review, National Institutes of Health, 6701 Rockledge Drive, Room 2206, MSC 7890, Bethesda, MD 20892, 301–435–4511, *whitmarshb@csr.nih.gov.*

Name of Committee: Immunology Integrated Review Group, Cellular and Molecular Immunology—B Study Section.
Date: February 13–14, 2008.
Time: 8 a.m. to 3 p.m.
Agenda: To review and evaluate grant applications.
Place: Marina del Rey Hotel, 13534 Bali Way, Marina del Rey, CA 90292.
Contact Person: Betty Hayden, PhD, Scientific Review Administrator, Center for Scientific Review, National Institutes of Health, 6701 Rockledge Drive, Room 4206, MSC 7812, Bethesda, MD 20892, 301–435–1223, *haydenb@csr.nih.gov.*

Name of Committee: Oncological Sciences Integrated Review Group, Tumor Progression and Metastasis Study Section.
Date: February 14–15, 2008.
Time: 8 a.m. to 5 p.m.
Agenda: To review and evaluate grant applications.
Place: Ritz Carlton Hotel, 1150 22nd Street, NW., Washington, DC 20037.
Contact Person: Manzoor Zarger, PhD, Scientific Review Administrator, Center for Scientific Review, National Institutes of Health, 6701 Rockledge Drive, Room 6208, MSC 7804, Bethesda, MD 20892, (301) 435–2477, *zargerma@csr.nih.gov.*

Name of Committee: Center for Scientific Review Special Emphasis Panel, Vectors.
Date: February 14–15, 2008.
Time: 8 a.m. to 5 p.m.
Agenda: To review and evaluate grant applications.
Place: National Institutes of Health, 6701 Rockledge Drive, Bethesda, MD 20892, (Virtual Meeting).
Contact Person: Fouad A. El-Zaatari, PhD, Scientific Review Administrator, Center for Scientific Review, National Institutes of Health, 6701 Rockledge Drive, Room 3206, MSC 7808, Bethesda, MD 20814–9692, (301) 435–1149, *elzaataf@csr.nih.gov.*

Name of Committee: Center for Scientific Review Special Emphasis Panel, Clinical Molecular Imaging (Overflow).
Date: February 15, 2008.
Time: 3 p.m. to 7 p.m.
Agenda: To review and evaluate grant applications.
Place: Bahia Resort Hotel, 998 West Mission Bay Drive, San Diego, CA 92109.
Contact Person: Eileen W. Bradley, DSC, Scientific Review Administrator, Center for Scientific Review, National Institutes of Health, 6701 Rockledge Drive, Room 5100, MSC 7854, Bethesda, MD 20892, (301) 435–1179, *bradleye@csr.nih.gov.*

Name of Committee: Center for Scientific Review Special Emphasis Panel, Social Science and Population Studies R03s, R15s, and R21s.
Date: February 15, 2008.
Time: 8 a.m. to 5 p.m.
Agenda: To review and evaluate grant applications.
Place: Marina del Rey Hotel, 13534 Bali Way, Marina del Rey, CA 90292.
Contact Person: Valerie Durrant, PhD, Scientific Review Administrator, Center for Scientific Review, National Institutes of Health, 6701 Rockledge Drive, Room 3148, MSC 7770, Bethesda, MD 20892, (301) 435–3554, *durrantv@csr.nih.gov.*

Name of Committee: Center for Scientific Review Special Emphasis Panel, Topics in Aging and Development.
Date: February 15, 2008.
Time: 11 a.m. to 2 p.m.
Agenda: To review and evaluate grant applications.
Place: National Institutes of Health, 6701 Rockledge Drive, Bethesda, MD 20892 (Telephone Conference Call).
Contact Person: Francois Boller, MD, PhD, Scientific Review Administrator, Center for Scientific Review, National Institutes of Health, 6701 Rockledge Drive, Room 3206, MSC 7848, Bethesda, MD 20892, (301) 435–1019, *bollerf@csr.nih.gov.*

Name of Committee: Center for Scientific Review Special Emphasis Panel, Member Conflicts: Child Development and Developmental Disorder.
Date: February 19–20, 2008.
Time: 8 a.m. to 9 p.m.
Agenda: To review and evaluate grant applications.
Place: National Institutes of Health, 6701 Rockledge Drive, Bethesda, MD 20892, (Virtual Meeting).
Contact Person: Estina E. Thompson, MPH, PhD, Scientific Review Administrator, Center for Scientific Review, National Institutes of Health, 6701 Rockledge Drive, Room 3178, MSC 7848, Bethesda, MD 20892, 301–496–5749, *thompson@mail.nih.gov.*

Name of Committee: Renal and Urological Studies Integrated Review Group, Urologic and Kidney Development and Genitourinary Diseases Study Section.
Date: February 21, 2008.
Time: 8 a.m. to 7 p.m.
Agenda: To review and evaluate grant applications.
Place: Hotel Lombardy, 2019 Pennsylvania Avenue, Washington, DC 20006.
Contact Person: Ryan G. Morris, PhD, Scientific Review Administrator, Center for Scientific Review, National Institutes of Health, 6701 Rockledge Drive, Room 4205, MSC 7814, Bethesda, MD 20892, 301–435–1501, *morrisr@csr.nih.gov.*

Name of Committee: Center for Scientific Review Special Emphasis Panel, Clinical Hematology.
Date: February 22, 2008.
Time: 8 a.m. to 1 p.m.
Agenda: To review and evaluate grant applications and/or proposals.
Place: Holiday Inn Georgetown, 2101 Wisconsin Avenue, NW., Washington, DC 20007.
Contact Person: Bukhtiar H. Shah, DVM, PhD, Scientific Review Offier, Center for Scientific Review, National Institutes of Health, 6701 Rockledge Drive, Room 4213, MSC 7802, Bethesda, MD 20892, (301) 435–1233, *shahb@csr.nih.gov.*

Name of Committee: Center for Scientific Review Special Emphasis Panel, Chronic Fatigue and Fibromyalgia Syndromes, Temporomandibular Disorders.
Date: February 22, 2008.
Time: 10 a.m. to 2 p.m.
Agenda: To review and evaluate grant applications.
Place: National Institutes of Health, 6701 Rockledge Drive, Bethesda, MD 20892. (Telephone Conference Call).
Contact Person: J. Terrell Hoffeld, DDS, PhD, Dental Officer, USPHS, Center for Scientific Review, National Institutes of Health, 6701 Rockledge Drive, Room 4116, MSC 7816, Bethesda, MD 20892, 301–435–1781, *th88q@nih.gov.*

Name of Committee: Center for Scientific Review Special Emphasis Panel, DNA Repair and Carcinogenesis.
Date: February 26, 2006.
Time: 1 p.m. to 3 p.m.
Agenda: To review and evaluate grant applications.
Place: National Institutes of Health, 6701 Rockledge Drive, Bethesda, MD 20892. (Telephone Conference Call)
Contact Person: Denise R. Shaw, PhD, Scientific Review Officer, Center for Scientific Review, National Institutes of Health, 6701 Rockledge Drive, Room 6158, MSC 7804, Bethesda, MD 20892, 301–435–0198, *shawkath@mail.nih.gov*.

Name of Committee: Center for Scientific Review Special Emphsis Panel, Pilot and Feasibility Clinical Studies in Digestive Diseases and Nutrition.
Date: February 27, 2008.
Time: 1 p.m. to 3 p.m.
Agenda: To review and evaluate grant applications.
Place: National Institutes of Health, 6701 Rockledge Drive, Bethesda, MD 20892. (Telephone Conference Call)
Contact Person: Peter J. Perrin, PhD, Scientific Review Administrator, Center for Scientific Review, National Institutes of Health, 6701 Rockledge Drive, Room 2180, MSC 7818, Bethesda, MD 20892, (301) 435–0682, *perrinp@csr.nih.gov*.

(Catalogue of Federal Domestic Assistance Program Nos. 93.306, Comparative Medicine; 93.333, Clinical Research, 93.306, 93.333, 93.337, 93.393–93.396, 93.837–93.844, 93.846–93.878, 93.892, 93.893, National Institutes of Health, HHS)

Dated: January 15, 2008.

Jennifer Spaeth,

Director, Office of Federal Advisory Committee Policy.

[FR Doc. 08–224 Filed 1–22–08; 8:45 am]

BILLING CODE 4140–01–M

DEPARTMENT OF HEALTH AND HUMAN SERVICES

National Institutes of Health

Center for Scientific Review; Amended Notice of Meeting

Notice is hereby given of a change in the meeting of the Macromolecular Structure and Function D Study Section, February 7, 2008, 8 a.m. to February 8, 2008, 6 p.m., Hilton Long Beach & Executive Meeting Center, 701 West Ocean Boulevard, Long Beach, CA, 90831 which was published in the **Federal Register** on January 9, 2008, 73 FR 1637–1639.

The meeting will be held one day only February 7, 2008, from 8 a.m. to 6 p.m. The meeting location remains the same. The meeting is closed to the public.

Dated: January 15, 2008.

Jennifer Spaeth,

Director, Office of Federal Advisory Committee Policy.

[FR Doc. 08–225 Filed 1–22–08; 8:45 am]

BILLING CODE 4140–01–M

DEPARTMENT OF HEALTH AND HUMAN SERVICES

National Institutes of Health

National Heart, Lung, and Blood Institute; Notice of Closed Meeting

Pursuant to section 10(d) of the Federal Advisory Committee Act, as amended (5 U.S.C. Appendex 2), notice is hereby given of the following meeting.

The meeting will be closed to the public in accordance with the provisions set forth in sections 552b(c)(4) and 552b(c)(6), Title 5 U.S.C., as amended. The grant applications and the discussions could disclose confidential trade secrets or commercial property such as patentable material, and personal information concerning individuals assocaited with the grant applications, the disclosure of which would constitute a clearly unwarranted invasion of personal privacy.

Name of Committee: National Heart, Lung, and Blood Institute Special Emphasis Panel, Clinical Investigator Awards (K08s).
Date: January 29, 2008.
Time: 12 p.m. to 3 p.m.
Agenda: To review and evaluate grant applications.
Place: National Institutes of Health, 6701 Rockledge Drive, Bethesda, MD 20892 (Telephone Conference Call).
Contact Person: David A. Wilson, PhD, Scientific Review Administrator, Review Branch/DERA, National Heart, Lung, and Blood Institute, 6701 Rockledge Drive, Room 7204, Bethesda, MD 20892–7924, 301–435–0299, *wilsonda2@nhlbi.nih.gov.*

This notice is being published less than 15 days prior to the meeting due to the timing limitations imposed by the review and funding cycle.

(Catalogue of Federal Domestic Assistance Program Nos. 93.233, National Center for Sleep Disorders Research; 93.837, Heart and Vascular Diseases Research; 93.838, Lung Diseases Research; 93.839, Blood Diseases and Resources Research, National Institutes of Health, HHS)

Jennifer Spaeth,

Director, Office of Federal Advisory Committee Policy.

[FR Doc. 08–220 Filed 1–22–08: 8:45 am]

BILLING CODE 4140–01–M

DEPARTMENT OF HEALTH AND HUMAN SERVICES

National Institutes of Health

National Institute on Drug Abuse; Amended Notice of Meeting

Notice is hereby given of a change in the meeting of the National Institute on Drug Abuse Special Emphasis Panel, February 1, 2008, 1 p.m. to February 1, 2008, 5 p.m., National Institutes of Health, 6101 Executive Boulevard, Rockville, MD 20852 which was published in the **Federal Register** on January 9, 2008, Volume 73, Number 6.

The date of the meeting was changed to February 22, 2008. The meeting is closed to the public.

Dated: January 15, 2008.

Jennifer Spaeth,

Director, Office of Federal Advisory Committee Policy.

[FR Doc. 08–221 Filed 1–22–08; 8:45 am]

BILLING CODE 4140–01–M

DEPARTMENT OF HEALTH AND HUMAN SERVICES

National Institutes of Health

National Institute on Drug Abuse; Notice of Closed Meeting

Pursuant to section 10(d) of the Federal Advisory Committee Act, as amended (5 U.S.C. Appendix 2), notice is hereby given of the following meeting.

The meeting will be closed to the public in accordance with the provisions set forth in sections 552b(c)(4) and 552b(c)(6), Title 5 U.S.C., as amended. The grant applications and the discussions could disclose confidential trade secrets or commercial property such as patentable material, and personal information concerning individuals associated with the grant applications, the disclosure of which would constitute a clearly unwarranted invasion of personal privacy.

Name of Committee: National Institute on Drug Abuse Special Emphasis Panel, NIDA-L New Investigator R01 SEP.
Date: February 21, 2008.
Time: 12:30 p.m. to 3 p.m.

Agenda: To review and evaluate grant applications.

Place: National Institutes of Health, 6101 Executive Boulevard, Rockville, MD 20852 (Telephone Conference Call).

Contact Person: Gerald L. McLaughlin, PhD, Scientific Review Administrator, Office of Extramural Affairs, National Institute on Drug Abuse, NIH, DHHS, Room 220, MSC 8401, 6101 Executive Blvd., Bethesda, MD 20892–8401, 301–402–6626, *gm145a@nih.gov.*

(Catalogue of Federal Domestic Assistance Program Nos. 93.279, Drug Abuse and Addiction Research Programs, National Institutes of Health, HHS)

Dated: January 15, 2008.

Jennifer Spaeth,

Director, Office of Federal Advisory Committee Policy.

[FR Doc. 08–222 Filed 1–22–08; 8:45 am]

BILLING CODE 4140–01–M

DEPARTMENT OF HEALTH AND HUMAN SERVICES

National Institutes of Health

National Library of Medicine; Notice of Closed Meeting

Pursuant to section 10(d) of the Federal Advisory Committee Act, as amended (5 U.S.C. Appendix 2), notice is hereby given of the following meeting.

The meeting will be closed to the public in accordance with the provisions set forth in sections 552b(c)(4) and 552b(c)(6), Title 5 U.S.C., as amended. The grant applications and the discussions could disclose confidential trade secrets or commercial property such as patentable material, and personal information concerning individuals associated with the grant applications, the disclosure of which would constitute a clearly unwarranted invasion of personal privacy.

Name of Committee: Biomedical Library and Informatics Review Committee.

Date: March 6–7, 2008.

Time: March 6, 2008, 8 a.m. to 6 p.m.

Agenda: To review and evaluate grant applications.

Place: National Library of Medicine, Building 38, Board Room, 2nd Floor, 8600 Rockville Pike, Bethesda, MD 20892.

Time: March 7, 2008, 8 a.m. to 2 p.m.

Agenda: To review and evaluate grant applications.

Place: National Library of Medicine, Building 38, Board Room, 2nd Floor, 8600 Rockville Pike, Bethesda, MD 20892.

Contact Person: Arthur A Petrosian, PhD, Scientific Review Administrator, Division of Extramural Programs, National Library of Medicine, 6705 Rockledge Drive, Suite 301, Bethesda, MD 20892–7968, 301–496–4253, *petrosia@mail.nih.gov.*

(Catalogue of Federal Domestic Assistance Program Nos. 93.879, Medical Library Assistance, National Institutes of Health, HHS)

Dated: January 15, 2008.

Jennifer Spaeth,

Director, Office of Federal Advisory Committee Policy.

[FR Doc. 08–223 Filed 1–22–08; 8:45 am]

BILLING CODE 4140–01–M

DEPARTMENT OF HOMELAND SECURITY

U.S. Customs and Border Protection

Proposed Collection; Comment Request; Request for Information

AGENCY: U.S. Customs and Border Protection, Department of Homeland Security.

ACTION: 60-Day Notice and request for comments; Extension of existing collection of information: 1651–0023.

SUMMARY: As part of its continuing effort to reduce paperwork and respondent burden, U.S. Customs and Border Protection (CBP) invites the general public and other Federal agencies to comment on an information collection requirement concerning Request for Information. This request for comment is being made pursuant to the Paperwork Reduction Act: (Pub. L. 104–13; 44 U.S.C. 3505(c)(2)).

DATES: Written comments should be received on or before March 24, 2008, to be assured of consideration.

ADDRESSES: Direct all written comments to U.S. Customs and Border Protection, Information Services Group, Attn.: Tracey Denning, 1300 Pennsylvania Avenue, NW., Room 3.2C, Washington, DC 20229.

FOR FURTHER INFORMATION CONTACT: Requests for additional information should be directed to U.S. Customs and Border Protection, Attn.: Tracey Denning, 1300 Pennsylvania Avenue NW., Room 3.2C, Washington, DC 20229, Tel. (202) 344–1429.

SUPPLEMENTARY INFORMATION: CBP invites the general public and other Federal agencies to comment on proposed and/or continuing information collections pursuant to the Paperwork Reduction Act (Pub. L. 104–13; 44 U.S.C. 3505(c)(2)). The comments should address: (a) Whether the collection of information is necessary for the proper performance of the functions of the agency, including whether the information shall have practical utility; (b) the accuracy of the agency's estimates of the burden of the collection of information; (c) ways to enhance the quality, utility, and clarity of the information to be collected; (d) ways to minimize the burden including the use of automated collection techniques or the use of other forms of information technology; and (e) estimates of capital or start-up costs and costs of operations, maintenance, and purchase of services to provide information. The comments that are submitted will be summarized and included in the CBP request for Office of Management and Budget (OMB) approval. All comments will become a matter of public record. In this document CBP is soliciting comments concerning the following information collection:

Title: Request for Information

OMB Number: 1651–0023

Form Number: CBP Form–28

Abstract: Form CBP–28 is used by CBP personnel to request additional information from importers when the invoice or other documentation provide insufficient information for CBP to carry out is responsibilities to protect revenues.

Current Actions: There are no changes to the information collection. This submission is being submitted to extend the expiration data.

Type of Review: Extension

Affected Public: Businesses, individuals, institutions

Estimated Number of Respondents: 60,000

Estimated Time Per Respondent: 1 hour

Estimated Total Annual Burden Hours: 60,000

Estimated Total Annualized Cost on the Public: N/A

Dated: January 15, 2008.

Tracey Denning,

Agency Clearance Officer, Information Services Group.

[FR Doc. 08–228 Filed 1–22–08; 8:45 am]

BILLING CODE 9111–14–M

DEPARTMENT OF HOMELAND SECURITY

U.S. Customs and Border Protection

Proposed Collection; Comment Request; Certificate of Compliance for Turbine Fuel Withdrawals

AGENCY: U.S. Customs and Border Protection, Department of Homeland Security.

ACTION: 60-Day Notice and request for comments; Extension of an existing collection of information: 1651–0072.

SUMMARY: As part of its continuing effort to reduce paperwork and respondent

burden, U.S. Customs and Border Protection (CBP) invites the general public and other Federal agencies to comment on an information collection requirement concerning the Certificate of Compliance for Turbine Fuel Withdrawals. This request for comment is being made pursuant to the Paperwork Reduction Act (Pub. L. 104–13; 44 U.S.C. 3505(c)(2)).

DATES: Written comments should be received on or before March 24, 2008, to be assured of consideration.

ADDRESSES: Direct all written comments to U.S. Customs and Border Protection, Information Services Group, Attn.: Tracey Denning, 1300 Pennsylvania Avenue, NW., Room 3.2C, Washington, DC 20229.

FOR FURTHER INFORMATION CONTACT: Requests for additional information should be directed to U.S. Customs and Border Protection, Attn. Tracey Denning, 1300 Pennsylvania Avenue, NW., Room 3.2C, Washington, DC 20229, Tel. (202) 344–1429.

SUPPLEMENTARY INFORMATION: CBP invites the general public and other Federal agencies to comment on proposed and/or continuing information collections pursuant to the Paperwork Reduction Act (Pub. L. 104–13; 44 U.S.C. 3505(c)(2)). The comments should address: (a) Whether the collection of information is necessary for the proper performance of the functions of the agency, including whether the information shall have practical utility; (b) the accuracy of the agency's estimates of the burden of the collection of information; (c) ways to enhance the quality, utility, and clarity of the information to be collected; (d) ways to minimize the burden, including the use of automated collection techniques or the use of other forms of information technology; and (e) estimates of capital or start-up costs and costs of operations, maintenance, and purchase of services to provide information. The comments that are submitted will be summarized and included in the CBP request for Office of Management and Budget (OMB) approval. All comments will become a matter of public record. In this document CBP is soliciting comments concerning the following information collection:

Title: Certificate of Compliance for Turbine Fuel Withdrawals

OMB Number: 1651–0072

Form Number: N/A

Abstract: This information is collected to ensure regulatory compliance for Turbine Fuel Withdrawals to protect the revenue.

Current Actions: There are no changes to the information collection. This submission is being submitted to extend the expiration date.

Type of Review: Extension

Affected Public: Businesses

Estimated Number of Respondents: 30

Estimated Time per Respondent: 12 hours

Estimated Total Annual Burden Hours: 360

Estimated Total Annualized Cost on the Public: N/A

Dated: January 15, 2008.

Tracey Denning,

Agency Clearance Officer, Information Services Branch.

[FR Doc. 08–236 Filed 1–22–08; 8:45 am]

BILLING CODE 9111–14–M

DEPARTMENT OF HOMELAND SECURITY

Customs and Border Protection

Proposed Collection; Comment Request Record of Vessel Foreign Repair or Equipment Purchase

AGENCY: U.S. Customs and Border Protection, Department of Homeland Security.

ACTION: 60-Day Notice and request for comments; Extension of an existing collection of information: 1651–0027.

SUMMARY: As part of its continuing effort to reduce paperwork and respondent burden, U.S. Customs and Border Protection (CBP) invites the general public and other Federal agencies to comment on an information collection requirement concerning Record of Vessel Foreign Repair or Equipment Purchase. This request for comment is being made pursuant to the Paperwork Reduction Act (Pub. L. 104–13; 44 U.S.C. 3505(c)(2)).

DATES: Written comments should be received on or before March 24, 2008, to be assured of consideration.

ADDRESSES: Direct all written comments to U.S. Customs and Border Protection, Information Services Group, Attn.: Tracey Denning, 1300 Pennsylvania Avenue, NW., Room 3.2C, Washington, DC 20229.

FOR FURTHER INFORMATION CONTACT: Requests for additional information should be directed to U.S. Customs and Border Protection, Attn.: Tracey Denning, 1300 Pennsylvania Avenue, NW., Room 3.2C, Washington, DC 20229, Tel. (202) 344–1429.

SUPPLEMENTARY INFORMATION: CBP invites the general public and other Federal agencies to comment on proposed and/or continuing information collections pursuant to the Paperwork Reduction Act (Pub. L. 104–13; 44 U.S.C. 3505(c)(2)). The comments should address: (a) Whether the collection of information is necessary for the proper performance of the functions of the agency, including whether the information shall have practical utility; (b) the accuracy of the agency's estimates of the burden of the collection of information; ways to enhance the quality, utility, and clarity of the information to be collected; (d) ways to minimize the burden including the use of automated collection techniques or the use of other forms of information technology; and (e) estimates of capital or start-up costs and costs of operations, maintenance, and purchase of services to provide information. The comments that are submitted will be summarized and included in the CBP request for Office of Management and Budget (OMB) approval. All comments will become a matter of public record. In this document CBP is soliciting comments concerning the following information collection:

Title: Record of Vessel Foreign Repair or Equipment Purchase.

OMB Number: 1651–0027.

Form Number: Form CBP–226.

Abstract: This collection of information is necessary to ensure the collection of applicable duties on all equipment, parts, or materials purchased, and repairs made to U.S. Flag vessels outside the United States.

Current Actions: There are no changes to the information collection. This submission is being submitted to extend the expiration date.

Type of Review: Extension.

Affected Public: Businesses, Individuals.

Estimated Number of Respondents: 200.

Estimated Time per Respondent: 7.5 hours.

Estimated Total Annual Burden Hours: 1,500.

Estimated Total Annualized Cost on the Public: N/A.

Dated: January 15, 2008.

Tracey Denning,

Agency Clearance Officer, Information Services Group.

[FR Doc. E8–1034 Filed 1–22–08; 8:45 am]

BILLING CODE 9111–14–P

DEPARTMENT OF HOMELAND SECURITY

Customs and Border Protection

Proposed Collection; Comment Request Ship's Stores Declaration

AGENCY: U.S. Customs and Border Protection, Department of Homeland Security.

ACTION: 60-Day Notice and request for comments; Extension of an existing collection of information: 1651–0018.

SUMMARY: As part of its continuing effort to reduce paperwork and respondent burden, U.S. Customs and Border Protection (CBP) invites the general public and other Federal agencies to comment on an information collection requirement concerning Ship's Stores Declaration. This request for comment is being made pursuant to the Paperwork Reduction Act (Pub. L. 104–13; 44 U.S.C. 3505(c)(2)).

DATES: Written comments should be received on or before March 24, 2008, to be assured of consideration.

ADDRESSES: Direct all written comments to the U.S. Customs and Border Protection, Information Services Group, Attn: Tracey Denning, 1300 Pennsylvania Avenue, NW., Room 3.2C, Washington, DC 20229.

FOR FURTHER INFORMATION CONTACT: Requests for additional information should be directed to the U.S. Customs and Border Protection, Attn: Tracey Denning, 1300 Pennsylvania Avenue, NW., Room 3.2C, Washington, DC 20229, Tel. (202) 344–1429.

SUPPLEMENTARY INFORMATION: CBP invites the general public and other Federal agencies to comment on proposed and/or continuing information collections pursuant to the Paperwork Reduction Act (Pub. L. 104–13; 44 U.S.C. 3505(c)(2)). The comments should address: (a) Whether the collection of information is necessary for the proper performance of the functions of the agency, including whether the information shall have practical utility; (b) the accuracy of the agency's estimates of the burden of the collection of information; ways to enhance the quality, utility, and clarity of the information to be collected; (d) ways to minimize the burden including the use of automated collection techniques or the use of other forms of information technology; and (e) estimates of capital or start-up costs and costs of operations, maintenance, and purchase of services to provide information. The comments that are submitted will be summarized and included in the CBP request for Office of Management and Budget (OMB) approval. All comments will become a matter of public record. In this document Customs is soliciting comments concerning the following information collection:

Title: Ship's Stores Declaration.

OMB Number: 1651–0018.

Form Number: CBP Form 1303.

Abstract: This collection is required for audit purposes to ensure that goods used for Ship's Stores can be easily distinguished from other cargo and retain duty-free status.

Current Actions: There are no changes to the information collection. This submission is being submitted to extend the expiration date.

Type of Review: Extension.

Affected Public: Businesses, Institutions.

Estimated Number of Respondents: 8,000.

Estimated Time per Respondent: 3.35 hours.

Estimated Total Annual Burden Hours: 26,000.

Estimated Total Annualized Cost on the Public: N/A.

Dated: January 15, 2008.

Tracey Denning,

Agency Clearance Officer, Information Services Group.

[FR Doc. E8–1038 Filed 1–22–08; 8:45 am]

BILLING CODE 9111–14–P

DEPARTMENT OF HOMELAND SECURITY

Customs and Border Protection

Proposed Collection; Comment Request; North American Free Trade Agreement Duty Deferral

AGENCY: U.S. Customs and Border Protection, Department of Homeland Security.

ACTION: 60-Day Notice and request for comments; Extension of an existing collection of information: 1651–0071.

SUMMARY: As part of its continuing effort to reduce paperwork and respondent burden, U.S. Customs and Border Protection (CBP) invites the general public and other Federal agencies to comment on an information collection requirement concerning the North American Free Trade Agreement Duty Deferral. This request for comment is being made pursuant to the Paperwork Reduction Act (Pub. L. 104–13; 44 U.S.C. 3505(c)(2)).

DATES: Written comments should be received on or before March 24, 2008, to be assured of consideration.

ADDRESSES: Direct all written comments to U.S. Customs and Border Protection, Information Services Group, Attn.: Tracey Denning, 1300 Pennsylvania Avenue, NW., Room 3.2C, Washington, DC 20229.

FOR FURTHER INFORMATION CONTACT: Requests for additional information should be directed to U.S. Customs and Border Protection, Attn.: Tracey Denning, 1300 Pennsylvania Avenue, NW., Room 3.2C, Washington, DC 20229, Tel. (202) 344–1429.

SUPPLEMENTARY INFORMATION: CBP invites the general public and other Federal agencies to comment on proposed and/or continuing information collections pursuant to the Paperwork Reduction Act (Pub. L. 104–13; 44 U.S.C. 3505(c)(2)). The comments should address: (a) Whether the collection of information is necessary for the proper performance of the functions of the agency, including whether the information shall have practical utility; (b) the accuracy of the agency's estimates of the burden of the collection of information; (c) ways to enhance the quality, utility, and clarity of the information to be collected; (d) ways to minimize the burden including the use of automated collection techniques or the use of other forms of information technology; and (e) estimates of capital or start-up costs and costs of operations, maintenance, and purchase of services to provide information. The comments that are submitted will be summarized and included in the CBP request for Office of Management and Budget (OMB) approval. All comments will become a matter of public record. In this document CBP is soliciting comments concerning the following information collection:

Title: North American Free Trade Agreement Duty Deferral.

OMB Number: 1651–0071.

Form Number: N/A.

Abstract: This collection of information is used to insure compliance with the North American Free Trade Agreement Duty Deferral Program with respect to merchandise that is withdrawn from a U.S. duty-deferral program for exportation to another NAFTA country.

Current Actions: There are no changes to the information collection. This submission is being submitted to extend the expiration date.

Type of Review: Extension (without change).

Affected Public: Businesses.

Estimated Number of Respondents: 50.

Estimated Time per Respondent: 5.6 hours.

Estimated Total Annual Burden Hours: 280.

Estimated Total Annualized Cost on the Public: N/A.

Dated: January 17, 2008.

Tracey Denning,

Agency Clearance Officer, Information Services Group.

[FR Doc. E8–1040 Filed 1–22–08; 8:45 am]

BILLING CODE 9111–14–P

DEPARTMENT OF HOMELAND SECURITY

U.S. Customs and Border Protection

Agency Information Collection Activities: On-Line Allegation Submission

AGENCY: U.S. Customs and Border Protection, Department of Homeland Security.

ACTION: 30-Day Notice and request for comments; new collection of information.

SUMMARY: U.S. Customs and Border Protection (CBP) of the Department of Homeland Security has submitted the following information collection request to the Office of Management and Budget (OMB) for review and approval in accordance with the Paperwork Reduction Act: On-line Allegation Submission. This is a new collection of information. This document is published to obtain comments from the public and affected agencies. This proposed information collection was previously published in the **Federal Register** (72 FR 63622) on November 9, 2007, allowing for a 60-day comment period. One public comment was received. CBP will respond to this comment. This notice allows for an additional 30 days for public comments. This process is conducted in accordance with 5 CFR 1320.10.

DATES: Written comments should be received on or before February 22, 2008.

ADDRESSES: Interested persons are invited to submit written comments on the proposed information collection to the Office of Information and Regulatory Affairs, Office of Management and Budget. Comments should be addressed to Nathan Lesser, Desk Officer, Department of Homeland Security/ Customs and Border Protection, and sent via electronic mail to *oira_ submission@omb.eop.gov* or faxed to (202) 395–6974.

SUPPLEMENTARY INFORMATION: U.S. Customs and Border Protection (CBP) encourages the general public and affected Federal agencies to submit written comments and suggestions on proposed and/or continuing information collection requests pursuant to the Paperwork Reduction Act of 1995 (Pub. L. 04–13). Your comments should address one of the following four points:

(1) Evaluate whether the proposed collection of information is necessary for the proper performance of the functions of the agency/component, including whether the information will have practical utility;

(2) Evaluate the accuracy of the agencies/components estimate of the burden of The proposed collection of information, including the validity of the methodology and assumptions used;

(3) Enhance the quality, utility, and clarity of the information to be collected; and

(4) Minimize the burden of the collections of information on those who are to respond, including the use of appropriate automated, electronic, mechanical, or other technological collection techniques or other forms of information technology, *e.g.*, permitting electronic submission of responses.

Title: On-Line Allegation Submission.

Form Number: None.

Abstract: CBP proposes to develop an On-line Allegation Submission website that will provide a means for concerned members of the trade community to confidentially report violations to CBP.

Current Actions: This is being submitted to establish a new information collection.

Type of Review: New information collection.

Affected Public: Businesses, individuals.

Estimated Number of Respondents: 100.

Estimated Time Per Respondent: 15 minutes.

Estimated Total Annual Burden Hours: 25 hours.

If additional information is required contact: Tracey Denning, U.S. Customs and Border Protection, 1300 Pennsylvania Avenue, NW., Room 3.2.C, Washington, DC 20229, at 202–344–1429.

Dated: January 15, 2008.

Tracey Denning,

Agency Clearance Officer, Information Services Branch.

[FR Doc. E8–1048 Filed 1–22–08; 8:45 am]

BILLING CODE 9111–14–P

DEPARTMENT OF HOMELAND SECURITY

U.S. Customs and Border Protection

Proposed Collection; Comment Request Entry of Articles for Exhibition

AGENCY: U.S. Customs and Border Protection, Department of Homeland Security.

ACTION: 60-Day Notice and request for comments; Extension of an existing collection of information: 1651–0037.

SUMMARY: As part of its continuing effort to reduce paperwork and respondent burden, U.S. Customs and Border Protection (CBP) invites the general public and other Federal agencies to comment on an information collection requirement concerning Entry of Articles for Exhibition. This request for comment is being made pursuant to the Paperwork Reduction Act (Pub. L. 104–13; 44 U.S.C. 3505(c)(2)).

DATES: Written comments should be received on or before March 24, 2008, to be assured of consideration.

ADDRESSES: Direct all written comments to U.S. Customs and Border Protection, Information Services Group, Attn.: Tracey Denning, 1300 Pennsylvania Avenue, NW., Room 3.2C, Washington, DC 20229.

FOR FURTHER INFORMATION CONTACT: Requests for additional information should be directed to U.S. Customs and Border Protection, Attn: Tracey Denning, 1300 Pennsylvania Avenue, NW., Room 3.2C, Washington, DC 20229, Tel. (202) 344–1429.

SUPPLEMENTARY INFORMATION: CBP invites the general public and other Federal agencies to comment on proposed and/or continuing information collections pursuant to the Paperwork Reduction Act of 1995 (Pub. L. 104–13; 44 U.S.C. 3505(c)(2)). The comments should address: (a) Whether the collection of information is necessary for the proper performance of the functions of the agency, including whether the information shall have practical utility; (b) the accuracy of the agency's estimates of the burden of the collection of information; (c) ways to enhance the quality, utility, and clarity of the information to be collected; (d) ways to minimize the burden including the use of automated collection techniques or the use of other forms of information technology; and (e) estimates of capital or start-up costs and costs of operations, maintenance, and purchase of services to provide information. The comments that are submitted will be summarized and included in the CBP request for Office of Management and Budget (OMB) approval. All comments will become a matter of public record. In this document CBP is soliciting comments concerning the following information collection:

Title: Entry of Articles for Exhibition.

OMB Number: 1651–0037.

Form Number: N/A.

Abstract: This information is used by CBP to substantiate that the goods imported for exhibit have been approved for entry by the Department of Commerce.

Current Actions: There are no changes to the information collection. This submission is being submitted to extend the expiration date.

Type of Review: Extension.

Affected Public: Businesses, Individuals, Institutions.

Estimated Number of Respondents: 40.

Estimated Time per Respondent: 13.2 hours.

Estimated Total Annual Burden Hours: 530.

Estimated Total Annualized Cost on the Public: N/A.

Dated: January 15, 2008.

Tracey Denning,

Agency Clearance Officer, Information Services Group.

[FR Doc. E8–1049 Filed 1–22–08; 8:45 am]

BILLING CODE 9111–14–P

DEPARTMENT OF HOUSING AND URBAN DEVELOPMENT

[Docket No. FR–5154–N–01]

Notice of Funding Availability for the Section 202 Demonstration Pre-Development Grant Program

AGENCY: Office of the Assistant Secretary for Housing—Federal Housing Commissioner, HUD.

ACTION: Notice of funding availability.

Overview Information

A. *Federal Agency Name:* Department of Housing and Urban Development, Office of Housing.

B. *Funding Opportunity Title:* Section 202 Demonstration Pre-Development Grant Program.

C. *Announcement Type:* Initial announcement.

D. *Funding Opportunity Number:* The OMB approval number for this NOFA is 2502–0267. The **Federal Register** number is FR–5154–N–01.

E. *Catalog of Federal Domestic Assistance (CFDA) Number:* 14.157, Section 202 Demonstration Pre-Development Grant Program.

F. *Dates:* The application deadline date is: February 27, 2008. All applications must be received and validated by Grants.gov no later than 11:59:59 p.m. Eastern Time on the application deadline date. Refer to the General Section of the SuperNOFA published on January 18, 2007 (72 FR 2396) (General Section); the Introduction to the FY2007 SuperNOFA published on March 13, 2007 (72 FR 11434) (FY2007 SuperNOFA); the Fiscal Year 2007 SuperNOFA for HUD's Discretionary Programs; Supplementary Information and Technical Corrections published on May 11, 2007 (72 FR 27032) (FY2007 SuperNOFA Supplementary Information); and Section IV of this program NOFA for further information about application, submission, and timely receipt requirements.

G. *Additional Overview Content Information:* Applicants must be registered to apply online at Grants.gov to submit an application. Private nonprofit organizations and nonprofit consumer cooperatives interested in applying for funding under this program, in addition to this Program Section, should carefully review the General Section, FY2007 SuperNOFA, the FY2007 SuperNOFA Supplementary Information, and the information detailed in this program NOFA, which covers the registration, submission, timely receipt, and additional requirements for this funding opportunity. Applicants are advised to start the registration process immediately upon publication of this NOFA. Registration can take several weeks to complete.

Full Text of Announcement

I. Funding Opportunity Description

A. *Program Description.* The purpose of this Demonstration Pre-Development Grant program is to assist Sponsors of projects that receive Fund Reservation Awards pursuant to the FY2007 SuperNOFA for the Section 202 Supportive Housing for the Elderly program, by providing pre-development grant funding for architectural and engineering work, site control, and other planning-related expenses that are eligible for funding under the Section 202 Supportive Housing for the Elderly program. Subsequent to providing pre-development grant funding to the selected applicants, HUD will assess the impact of the availability of such funding on the ability of project Sponsors to expedite the development processing of projects from Section 202 Fund Reservation to Initial Closing within 18 months.

HUD is aware of the complexities of developing Section 202 projects and understands that a lack of pre-development funding may be a contributing factor in many instances where project Sponsors are not able to move their approved projects from Fund Reservation award to Initial Closing within the required 18-month time frame. Funding under this program is not intended to duplicate Section 202 Capital Advance funding, but rather to provide a source of funding for pre-development costs that would otherwise not be reimbursable until Initial Closing or would be payable from eligible funding resources secured outside of Section 202 Capital Advance funding.

B. *Authority.* The Section 202 Demonstration Pre-Development program is authorized by the Revised Continuing Appropriations Resolution, 2007 (Pub. L. 110–5; approved February 15, 2007).

II. Award Information

A. *Funding Available.* The Revised Continuing Appropriations Resolution, 2007 (Pub. L. 110–5; approved February 15, 2007) authorized approximately $19,800,000 for pre-development grants to private nonprofit organizations and consumer cooperatives in connection with the development of housing under the Section 202 Supportive Housing for the Elderly program.

B. *Funding Process.* HUD will only make offers to fully fund as many applications as possible from the $19,800,000 allocated for Sponsors that receive Section 202 Fund Reservations pursuant to the FY2007 SuperNOFA. Applicants selected for funding under the FY2007 Section 202 Supportive Housing for the Elderly NOFA are not guaranteed funding under this demonstration program.

C. *Maximum Grant Award.* The maximum grant amount per single application is $400,000. However, no more than $800,000 may be awarded to a single entity or its affiliated organizations. The amount of funding requested must be within the maximum grant award amounts; otherwise, the application will not receive funding consideration.

D. *Reduction of Requested Grant Amount.* HUD may make an award in an amount less than requested, if:

1. HUD determines that any of the proposed pre-development activities are ineligible for funding under the Section 202 Supportive Housing for the Elderly program;

2. HUD determines that an eligible applicant has not been able to provide sufficient evidence to support the proposed cost of an eligible pre-development item or activity;

3. HUD determines that a reduced grant would prevent duplicative federal funding; or

4. HUD determines that proposed costs for pre-development activities are not based on comparable costs for eligible items and activities in the applicant's community. HUD field office

staff will review proposed costs in accordance with customary and reasonable costs for such items within the geographical jurisdiction of the respective Multifamily Hub and/or Multifamily Program Center Office. If requested by HUD, eligible applicants must provide supportable evidence of comparable costs for proposed activities.

E. *Term of Funded Activities.* The grant term is 18 months from the date of the Section 202 Supportive Housing for the Elderly Agreement Letter to Initial Closing. Funds not expended by the end of the grant term are subject to recapture and/or repayment if expended on ineligible activities. Failure to complete the development processing of the Section 202 project by the end of the grant term may result in grant termination, grant reduction, or other action deemed appropriate by HUD. HUD may use past performance in making future funding decisions.

III. Eligibility Information

A. *Eligible Applicants.*

1. All private nonprofit organizations and nonprofit consumer cooperatives that submitted an application for funding consideration under the FY2007 SuperNOFA for the Section 202 Supportive Housing for the Elderly program are eligible to apply for funding under this Demonstration Pre-Development Grant program. (Please refer to the Section 202 program NOFA published with the FY2007 SuperNOFA and the FY2007 SuperNOFA Supplementary Information for a discussion on the eligibility criteria for the Section 202 program.) However, funding awards under this Section 202 Demonstration Pre-Development Grant program will be restricted to those applicants that are selected for Fund Reservation Awards under the FY2007 SuperNOFA for the Section 202 Supportive Housing for the Elderly program. Funding under this program will not be fair-shared to each HUD office.

2. *Ineligible applicants.* Ineligible applicants include:

a. Applicants that failed to submit a request for Fund Reservation under the FY2007 Section 202 Program NOFA.

b. Applications from eligible applicants that do not receive a Fund Reservation Award under the FY2007 SuperNOFA for the Section 202 program.

c. Applications from applicants that are ineligible under the Section 202 program, including public bodies and instrumentalities of public bodies.

d. Applicants submitting proposals involving mixed-financing for additional units.

B. Cost Sharing or Matching. No match required.

C. Other.

1. *Requirements and Procedures.* To receive and administer funding under this demonstration program, applicants must fully satisfy the eligibility requirements for participation in the Section 202 Supportive Housing for the Elderly program, as well as comply with the following:

a. *Statutory and Regulatory Requirements.* You must comply with all statutory, regulatory, threshold, and public policy requirements listed in the General Section.

b. *Allowable Use of Funds.* Pre-development grant funds may be used to cover the cost of pre-development activities relating to the development of supportive housing for the elderly under the Section 202 program, as described in Section IV.E.1. (''Eligible Activities''). However, before a grantee can enter into a contract for professional services, the entity must receive approval under the form HUD–2530 clearance process. Such entities include, but are not limited to, housing consultants (including those instances where eligible sponsors proposed to provide such services), general contractors, and management agents.

c. *Organizational Costs.* Eligible organizational expenses and/or costs are limited to those incurred in connection with the organization of an owner entity, pursuant to the requirements of the Section 202 Supportive Housing for the Elderly program.

d. *Site Control.* Applicants are required to provide evidence of site control, consistent with the requirements of the Section 202 program, as a condition to being funded under the FY2007 Section 202 NOFA. Applicants who receive funding awards under this NOFA may utilize this funding to extend site control in accordance with the site control requirements under the Section 202 Supportive Housing for the Elderly program. For further discussion, see the Section 202 Program NOFA published as part of the FY2007 SuperNOFA and the FY2007 SuperNOFA Supplementary Information.

e. *Phase I and Phase II Environmental Site Assessments (ESA).* The requirements for Phase I and II ESAs are the same as those that apply to the Section 202 Supportive Housing for the Elderly program and are contained in the Section 202 Program NOFA published as part of the FY2007 SuperNOFA and the FY2007 SuperNOFA Supplementary Information.

f. *False Statements.* See the General Section of the FY2007 SuperNOFA.

g. *Delinquent Federal Debts.* In addition to the requirements in the General Section of the FY2007 SuperNOFA, applicants at the time of award that have federal debt or are in default of an agreement with the Internal Revenue Service (IRS) will not be funded. Applicants selected for funding have an obligation to report to HUD changes in status of a current IRS agreement covering federal debt.

2. *Program Related Threshold Requirements.* In addition to the threshold requirements in the General Section of the FY2007 SuperNOFA, applicants must adhere to all program-specific threshold requirements, as detailed in this NOFA. HUD will consider an application non-responsive to this NOFA and will not accept it for processing if the applicant:

a. Is determined to be ineligible (Please refer to Section III.A. of this NOFA for a more detailed discussion on ineligible applicants);

b. Requested more than the maximum grant amount;

c. is granted a waiver to submit a paper application, but fails to submit the required original and four copies; or

d. Failed to submit the threshold requirements as identified by the asterisk (*) in Section IV.B. of this program NOFA by the deadline date.

IV. Application and Submission Information

A. Addresses to Request Application Package. All information needed for the preparation and submission of this application is included in this Program NOFA and the General Section of the FY2007 SuperNOFA and the FY2007 SuperNOFA Supplementary Information. Copies of the General Section, this program NOFA, and needed forms are found in the instructions and application downloads, are on the Grants.gov Web site at www.Grants.gov. If you have difficulty accessing the information, you may call the Grants.gov Support Desk toll free at (800) 518–GRANTS or e-mail your questions to *Support@Grants.gov.* The Support Desk staff will assist you in accessing the information.

Your application must be transmitted electronically using *http://www.Grants.gov/applicants/apply_for_grants.jsp*, unless you request and receive a waiver of the requirement for electronic application submittal. See the General Section, the Introduction to the FY2007 SuperNOFA, and the FY2007 SuperNOFA Supplementary

Information for further information and instructions pertaining to electronic application submission and waiver request requirements.

For applicants receiving a waiver to submit a paper application, an original and four copies of the completed application package must be received by the appropriate local HUD Office on or before February 27, 2008. See *http://www.hud.gov/offices/adm/grants/fundsavail.cfm* (select ''Important Information Related to the SuperNOFA'' and then select ''Field Offices'') for a complete listing of the Multifamily Hub Offices and Multifamily Program Centers.

B. Content and Form of Application Submission.

You should ensure that your application is complete before transmitting it to the following Web site: *http://www.grants.gov/applicants/apply_for_grants.jsp*. In cases where a waiver of electronic submission requirement is granted, an original and four copies must be submitted to the appropriate HUD office. In addition, all applicable documents must have an original signature. Upon receipt of the applications by HUD staff, HUD will screen all applications to determine if there are any curable deficiencies. See Section V.B.2. of this program NOFA for further discussion.

Applicants may submit more than one application to a single field office. However, no more than one application may be submitted per project. Each application must propose a separate project, and the proposed development must be located within the jurisdiction of the appropriate field office. To be eligible for review, all applications must contain the required exhibits that include form SF–424, form HUD–2880, and the narrative discussions. Forms needed for the application may be obtained from *http://www.grants.gov/applicants/apply_for grants.jsp*. Threshold items are identified by an asterisk (*). Failure to include threshold items in your initial application submission will render your application non-responsive and it will not be considered for funding by HUD. Applications must contain the required exhibits, as listed below:

1. *Cover Letter.* A brief narrative detailing the project's name; HUD project number; and the name(s), address(es), contact person name(s), and telephone number(s) of the Sponsor(s). The letter must also detail the total grant amount being requested under this Program NOFA.

2. *Standard Form 424—Application for Federal Assistance.* Applicants must enter their legal name in box 8.a. of the SF–424 as it appears in the Central Contractor Register (CCR). See the General Section of the FY2007 SuperNOFA regarding CCR registration.

3. ** Narrative Demonstrating Need for Pre-development Funding.* This exhibit requires applicants to submit form HUD–2880, Applicant/Recipient Disclosure/Update Report (''HUD Applicant Recipient Disclosure Report'' on Grants.gov). A disclosure of assistance from other government sources received in connection with the project is required. Applicants must also submit a brief narrative describing the financial circumstances that resulted in your need to apply for funding assistance with pre-development activities and how the lack of such assistance has impacted the organization's previous or current development efforts.

4. ** Proposed Pre-development Activities and Budget.* This exhibit requires applicants to submit a spreadsheet that specifically identifies the proposed activity(ies) and their anticipated cost. The recommended format is as follows:

Column 1—Clearly identify each eligible pre-development activity being proposed by the applicant.

Column 2—Identify the anticipated cost for each activity.

The spreadsheet must identify the total pre-development funding assistance being proposed in the application.

5. **Project Development Schedule.* This exhibit should include a detailed development schedule that identifies the pre-development activities being proposed, their projected start and completion dates, the projected completion date for all pre-development planning activities, and a brief narrative describing the applicant's plan for monitoring this schedule of activities and addressing delays should they occur. All projected development schedules must clearly demonstrate the applicant's ability to move its approved FY2007 Section 202 elderly housing project from Fund Reservation to Initial Closing within 18 months of grant approval and must provide a statement addressing how access to pre-development funding will assist the applicant in moving its FY2007 Section 202 elderly housing project to Initial Closing within 18 months of Fund Reservation approval. The completion of the Logic Model (form HUD–96010) will assist you in responding to this exhibit.

6. *Program Outcome Logic Model (HUD–96010).* The Logic Model is representative of this Section 202 Demonstration Pre-Development Grant program proposal and it serves as the ''executive summary'' for this grant request. Applicants must ensure that its Logic Model accurately represents the purpose of the funding request and the expected impact on the development process.

7. *Third-Party Documentation Facsimile Transmittal (''Facsimile Transmittal Form'' on Grants.gov) (HUD–96011).* This form must be used as part of the electronic application to transmit third-party documents and other information, as described in the General Section of the SuperNOFA (if applicable).

8. *Acknowledgment of Application Receipt (HUD–2993).* This is not required for applications submitted electronically.

9. *Client Comments and Suggestions (HUD–2994).* This is optional.

If changes have been made to any of the forms that were submitted under the FY2006 Section 202 NOFA, HUD requires that the updated form(s) be resubmitted under this Demonstration Pre-Development Grant NOFA.

10. *SF–424 Supplement, Survey for Ensuring Equal Opportunity for Applicants* (''Faith Based EEO Survey (SF–424 SUPP)'' on Grants.gov).

11. *SF–LLL, Disclosure of Lobbying Activities,* if applicable.

C. *Submission Dates and Times.* Your application must be received and validated electronically by Grants.gov no later than 11:59:59 p.m. eastern time by the application deadline date, unless a waiver of the electronic delivery process has been approved by HUD. Please refer to the General Section of the FY2007 SuperNOFA and Section IV.F. below for instructions on applying for a waiver. If a waiver is granted, HUD must receive an original and four copies of your application on February 27, 2008. The notification approving your waiver request will provide submission instructions. Paper applications must be received by the deadline date.

D. Intergovernmental Review. This funding opportunity is subject to Executive Order (EO) 12372, ''Intergovernmental Review of Federal Programs.'' You must contact your State's Single Point of Contact (SPOC) to find out about and comply with the state's process under EO 12372. The names and addresses of the SPOCs are listed on the Office of Management and Budget's home page at *http://www.whitehouse.gov/omb/grants/spoc.html.* If required by the state, the submission to the state needs to occur no later than the application deadline date. HUD recommends that you provide the state with sufficient time to review the application. Therefore, it is

important that you consult with the SPOC for state review timeframes and take that into account when submitting the application.

E. Funding Restrictions.

1. *Eligible Activities.* Section 202 Demonstration Pre-Development Grant program funds must be used exclusively to facilitate planning, design, and pre-development activities for projects funded under the FY2007 SuperNOFA for the Section 202 Supportive Housing for the Elderly program. Such activities include architectural and engineering work, site control planning, and other planning activities related to the development of a multifamily housing project funded under the FY2007 Section 202 Supportive Housing for the Elderly program. Grantees may not use funds for land acquisition; leasing; new construction; or property rehabilitation, alteration, demolition, or disposition.

a. All expenses related to eligible activities must be limited to those actual costs that are incurred prior to initial closing and be otherwise eligible activities under the Section 202 program. Activities that are eligible for funding include the following:

(1) *Appraisals.* The applicant's cost for obtaining an appraisal to establish the fair market value of the proposed site completed by a qualified and licensed appraiser.

(2) *Architect Services.* The design fees charged by licensed architectural/engineering firms for architectural services regarding the applicant's project.

(3) *Engineering Services.* Actual cost of boundary survey, topographic survey, soil borings, and tests.

(4) *Environmental Site Assessment.* Actual cost incurred for the environmental site assessment, i.e., Phase I and Phase II.

(5) *Consultant Services.* Up to 20 percent of the total amount of the contract between the applicant and its consultant for services related to the development and submission of an approvable Section 202 Fund Reservation Application.

(6) *Cost Analysis.* The cost of the contract between the applicant and a professional with experience in cost estimation, for an independent cost estimate needed to determine the viability of a proposed project, as required for firm commitment processing under the Section 202 program.

(7) *Legal Fees.* The cost for legal services and title binder fees.

(8) *Site Control.* The applicant's cost for extending the time for site control of the original site, including option costs necessary to extend the option agreement for up to 18 months, to the closing target date. The proceeds of this grant may not be used for site acquisition.

(9) *Market Studies.* The applicant's cost for a study completed by a qualified, independent, third-party, market research firm for purposes of examining the need for and verifying the marketability of the proposed project.

(10) *Organizational Expenses.* The actual cost related to the creation of an owner entity for the proposed project, pursuant to Section 202 program regulations.

(11) *Impact Fees.* One-time fees local governments charge Sponsor/Owners to offset the impact such housing will have on the community. (Typical impact fees are traffic, solid waste, sewer, water, electric, gas, police protection, and fire protection.)

(12) *Relocation Expenses.* If the project involves displacement of site occupants who are eligible for relocation assistance, indicate the total estimated cost.

(13) *Building Permits and Variance Fees.* The cost of obtaining building permits and variances.

2. *Ineligible Activities.* No proposed activity that is deemed to be ineligible will be funded from the Demonstration Pre-Development Grant funds.

a. Section 202 Demonstration Pre-Development Grant program funds may not be used for the following:

(1) To acquire sites or other real property; to fund organizational overhead and/or operating expenses, for staff salaries, or to fund any planning activity that is otherwise ineligible for assistance under the Section 202 Supportive Housing for the Elderly program.

(2) To meet Minimum Capital Investment (MCI) requirements for the Section 202 program.

(3) To meet Performance/Payment Bonds (dual obligee).

(4) To pay taxes and interest.

(5) To pay bond premium, builder's risk, liability insurance, fidelity bond insurance, performance bond insurance, cash bond, and insurance premiums.

b. In the event that funding awarded under this program is utilized for activities or purposes that have not been approved by HUD, the Department will seek repayment or any other available remedies.

3. Applicants submitting proposals involving mixed-financing for additional units are not eligible to be considered for pre-development funding under this NOFA.

F. Other Submission Requirements.

Application Submission and Receipt Procedures. This section provides the application submission and receipt instructions for HUD program applications. Refer to the General Section for specific procedures for additional information on application submission requirements.

1. Electronic Delivery. Demonstration Pre-Development Grant applicants must submit their applications electronically through *http://www.grants.gov/applicants/apply_for_grants.jsp*, unless a waiver is granted. Please be advised that Grants.gov will not accept Microsoft Vista or Microsoft 2007 operating systems. Applicants must use Microsoft Windows XP versions 2003 and below, or your application will not be accepted.

a. The *http://www.grants.gov/applicants/apply_for_grants.jsp* Web site offers a simple, unified application process. Submission requires an authenticated signature and registration at Grants.gov. There are five steps to complete the registration process, and information is available at the *www.grants.gov* Web site. Applicants should carefully read HUD's **Federal Register** Notice on Early Registration (71 FR 64070) published October 31, 2006, and start the *Grants.gov* registration process immediately upon publication of this NOFA. The registration process can take several weeks to complete.

b. In addition, applicants should carefully read the General Section, the Introduction to the FY2007 SuperNOFA, and the FY2007 SuperNOFA Supplementary Information. These notices alert applicants to a recent change in the registration process with the Central Contractor Registry (CCR). As of August 1, 2006, CCR registrants will not be able to enter or modify their name and address information, because it will be pre-populated using Dun and Bradstreet (D&B) Data Universal Numbering System (DUNS) record data. During a new registration or when updating a record, CCR registrants will have a choice to accept or reject the information provided from D&B. If the CCR registrant agrees with the D&B supplied information, the D&B data will be accepted into the CCR registrant record. If the CCR registrant disagrees with the D&B supplied information, the registrant will need to go to the D&B Web site, *http://fedgov.dnb.com/webform,* to modify the information contained in the D&B record before proceeding with its CCR registration. See further details in the above-referenced **Federal Register** Notice.

2. Instructions on how to submit an electronic application to HUD via *grants.gov/Apply* are contained in section IV.F. of the General Section.

Also, *Grants.gov* has a full set of instructions on how to apply for funds on its Web site at *http://www.grants.gov/applicants/apply_for_grants.jsp*. In addition, HUD has published a Desktop User Guide for Submitting Electronic Grant Applications, which is available on HUD's Web site at *http://www.hud.gov/utilities/intercept.cfm?/offices/adm/grants/deskuserguide.pdf*. The guide contains screen shots and detailed instructions. Applicants are encouraged to read all sources of instructions carefully.

3. *Waiver of Electronic Submission Requirement.* HUD will only accept electronic applications submitted through *http://www.grants.gov/applicants/apply_for_grants.jsp*, unless the applicant has received a waiver. Applicants that are unable to submit their application electronically must seek a waiver of the electronic grant submission requirement. Waiver requests must be submitted no later than 15 days before the application deadline date. Waiver requests must be submitted by mail or fax. For this program NOFA, e-mail requests will not be considered. Waiver requests submitted by mail or fax should be submitted on the applicant's letterhead, signed by an official with the legal authority to request a waiver from the Department. The request must be addressed to the Assistant Secretary for Housing at the following address: Brian D. Montgomery, Assistant Secretary for Housing—Federal Housing Commissioner, Department of Housing and Urban Development, 451 Seventh Street, SW., Room 9100, Washington, DC 20410–8000. Waiver requests submitted by fax must be sent to (202) 708–3104. If a waiver is granted, you must submit the required number of copies of your application to the Director of the appropriate local HUD office, and the application must be received no later than that HUD office's close of business on the application deadline date. The waiver approval notification will identify the appropriate HUD office where the application should be submitted and the required number of copies that must be submitted.

4. *Proof of Timely Submission.* Applicants must submit their applications to *http://www.grants.gov/applicants/apply_for_grants.jsp* in time for receipt and validation at *Grants.gov* by 11:59:59 p.m. eastern time on the application deadline date. Validation can take 24 to 48 hours, so applicants should submit with ample time for the process to be completed. Applicants are also advised to submit 72 hours in advance of the deadline so that they have sufficient time to correct any deficiencies that would prevent the acceptance of your application by *Grants.gov*. (Refer to the General Section for specific procedures regarding proof of timely submission of applications.)

5. Address for Submitting Applications. Applications must be submitted electronically through *http://www.grants.gov/applicants/apply_for_grants.jsp,* unless the applicant receives a waiver from the electronic application submission requirement. See Section IV of the General Section, ''Application Submission and Receipt Procedures,'' for information on applying online.

The applications submitted electronically via *http://www.grants.gov/applicants/apply_for_grants.jsp* will be electronically downloaded and forwarded to the appropriate local HUD office.

V. Application Review Information

A. Criteria. HUD Headquarters will select applications for the Section 202 Demonstration Pre-Development Grant based on the HUD Multifamily Program Center's rating of the respective FY2007 Section 202 applications. HUD will award funding under the following process until all available funding has been exhausted.

B. Review and Selection Process.

1. HUD's application review process will include, but is not limited to, an eligibility review of each pre-development planning activity being proposed by the applicant, the reasonableness of the proposed cost for each activity, the reasonableness of the applicant's proposed budget, and the ability of project Sponsors to expedite the development processing of projects from Section 202 Fund Reservation to Initial Closing within the 18-month time frame. All activities must be related to the development of the Section 202 housing project selected under the FY2007 Section 202 Supportive Housing for the Elderly program and be otherwise eligible activities under the Section 202 Program.

2. Review for Curable Deficiencies. A curable deficiency is a missing exhibit or portion of an exhibit that will not affect the eligibility of the applicant. The exhibits identified by asterisk (*) as threshold requirements must be dated on or before the application deadline date. Refer to the General Section of the SuperNOFA for additional information regarding procedures for corrections to deficient applications. HUD will screen all applications received by the application submission deadline for curable deficiencies. The HUD office will notify you in writing if your application is missing any of the exhibits or portions of exhibits, as listed in Section IV.B. of this NOFA. You will then be given 14 calendar days from the date of the HUD written notification to submit the information required to cure the noted deficiencies.

3. *Review for Threshold Requirements.* All applications must meet the threshold requirements identified in the General Section of the FY2007 SuperNOFA and in Section IV.B. and Section III.C.2. of this program NOFA. Failure to meet any threshold item will render an application ineligible for funding consideration. Please note that Section III.C.2. of the General Section of the FY2007 SuperNOFA, and the items identified by an asterisk (*) in Section IV.B. and in Section III.C.2. of this NOFA, are also threshold requirements and must be dated on or before the application deadline date. Failure to satisfy all threshold requirements at the time of submission will render the application in question as non-responsive to this NOFA, and the application will be subject to no further review. See the General Section of the FY2007 SuperNOFA for additional procedures for corrections to deficient applications.

4. *Technical Review.* HUD Multifamily Field Office staff will review applications that passed the threshold review for compliance with the eligibility criteria set forth in this NOFA. However, HUD will not reject your application based on technical review without notifying you of that rejection, the reason(s) for the rejection, and providing you with an opportunity to appeal. You will have 14 calendar days from the date of HUD's written notice to appeal a technical rejection to the HUD office. The HUD office will make a determination on an appeal before making its selection of projects to be forwarded to HUD Headquarters. HUD Field Office staff will forward to Headquarters a listing of eligible applications that were received by the deadline date, that met all eligibility criteria, that proposed reasonable costs for eligible activities, and that included all technical corrections by the designated deadline date.

5. HUD Headquarters will select Section 202 Demonstration Pre-Development Grant applications based on HUD Multifamily Program Centers' rating of the respective FY2007 Section 202 application, beginning with the highest-rated application nationwide. After this selection, HUD Headquarters will select the next highest-rated application in another Program Center. Only one application will be selected per Multifamily Program Center.

However, if there are no approvable applications in other Multifamily Program Centers, the process will begin again with the selection of the next-highest-rated application nationwide. More than one application may be selected per HUD Multifamily Program Center if there are no other approvable applications.

This process will continue into a second and subsequent round(s) until all approvable applications are selected using the available remaining funds. HUD Headquarters will fully fund as many applications as allocated funds will allow. HUD Headquarters will review its selection results to ensure that no single entity (including affiliated entities) receives grant funding in excess of $800,000. Once an organization receives its maximum amount of grant funding, no other projects from that organization will be eligible for selection from the succeeding rounds.

If there is a tie score between two or more applications, HUD will select the applicant with the highest score in Rating Factor 1 of the FY2007 Section 202 application. If Rating Factor 1 is scored identically, the score in Rating Factors 2, 3, and 4, of the FY2007 Section 202 application will be compared in that order, until one of the applications receives a higher score. If both applications still score the same, then the application that requests the least funding will be selected.

6. *Adjustments to Funding/Reduction of Requested Grant Amount.* See Section II.D. of this program NOFA.

VI. Award Administration Information

A. Award Notices. Following the congressional notification process, HUD will issue a press release announcing the selection of awards. Once such an announcement has been made, successful applicants will receive their selection letters and grant agreement, including an approved Logic Model, via regular or overnight mail. The grant agreement is the legally binding document that establishes a relationship between HUD and the award recipient organization. Once properly executed, funds are obligated, and the disbursement of funds is generally authorized.

1. As a condition of receiving a grant under this Section 202 Demonstration Pre-Development program, Grantees must open a separate, non-interest bearing account for the receipt and handling of these funds.

2. All applicants that were not selected for funding will receive a non-selection letter.

3. You may request a debriefing on your application in accordance with section VI.A. of the General Section of the FY2007 SuperNOFA. The request must be made to the Director of Multifamily Housing in the HUD field office that has jurisdiction over the housing development identified in your application, to which you sent your application.

B. Administrative and National Policy Requirements. The Revised Continuing Appropriations Resolution, 2007 (Pub. L. 110–5, approved February 15, 2007) requires HUD to obligate all Section 202 funds appropriated for FY2007 by September 30, 2010. Under 31 U.S.C. 1551, no funds can be disbursed from this account after September 30, 2015. Under this demonstration program, obligation of funds occurs upon execution of the Grant Agreement.

C. Reporting. Grantees must submit quarterly updates of the Program Outcome Logic Model (form HUD–96010), as well as quarterly SF–269, Financial Status Reports. In order for HUD to evaluate the effectiveness of the Demonstration Pre-Development Grant program (DPG) funding, each Logic Model must indicate the results achieved against the proposed output goal(s) and proposed outcome(s) that were stated in the FY2007 Section 202 DPG program application and agreed upon by HUD. HUD requires that funded recipients collect racial and ethnic beneficiary data. It has adopted OMB's Standards for Collection of Racial and Ethnic Data. In view of these requirements, you should use form HUD–27061, Racial and Ethnic Data Reporting Form (and instructions for its use) found on *http://www.HUDclips.org.*

D. Environmental Requirements. The provision of assistance under this NOFA is categorically excluded from environmental review under the National Environmental Policy Act of 1969 (42 U.S.C. 4321) and not subject to compliance action for related environmental authorities under 24 CFR 50.19(b)(1), (3), (5), (8), and (16).

E. Environmental Impact. This NOFA does not direct, provide for assistance or loan and mortgage insurance for, or otherwise govern or regulate, real property acquisition, disposition, leasing, rehabilitation, alteration, demolition, or new construction, or establish, revise, or provide for standards for construction or construction materials, manufactured housing, or occupancy. Accordingly, under 24 CFR 50.19(c)(1), this NOFA is categorically excluded from environmental review under the National Environmental Policy Act of 1969 (42 U.S.C. 4321).

VII. Agency Contacts

A. For programmatic information, you may contact the appropriate local HUD office, or Brenda M. Butler, at HUD Headquarters at (202) 708–3000, or via the Internet at *Brenda.M.Butler@hud.gov.* Persons with hearing and speech impairments may access the above number via TTY by calling the toll-free Federal Relay Service at (800) 877–8339.

B. For technical assistance in downloading and submitting an application package through *http://www.grants.gov/applicants/apply_for_grants.jsp*, contact the Grants.gov Help Desk at (800) 518–GRANTS, or by sending an e-mail to *support@grants.gov.*

VIII. Other Information

A. Section 102 of the HUD Reform Act, Documentation and Public Access Requirements. Section 102 of the Department of Housing and Urban Development Reform Act of 1989 (42 U.S.C. 3545) (HUD Reform Act) and the regulations codified at 24 CFR part 4, subpart A, contain a number of provisions that are designed to ensure greater accountability and integrity in the provision of certain types of assistance administered by HUD. On January 14, 1992, HUD published a notice that also provides information on the implementation of Section 102 (57 FR 1942). The documentation, public access, and disclosure requirements of Section 102 apply to assistance awarded under this NOFA, as follows:

1. *Documentation.* HUD will ensure that documentation and other information regarding each application submitted pursuant to this NOFA are sufficient to indicate the basis upon which assistance was provided or denied. This material, including any letters of support, will be made available for public inspection for a 5-year period beginning not less than 30 days after the award of the assistance. Material will be made available in accordance with the Freedom of Information Act (5 U.S.C. 552) and HUD's implementing regulations (24 CFR part 15).

2. *Disclosures.* HUD will make available to the public for 5 years all applicant disclosure reports (form HUD–2880) submitted in connection with this NOFA. Update reports (also reported on the HUD–2880) will be made available along with the applicant disclosure reports, but in no case for a period of less than 3 years. All reports, both applicant disclosures and updates, will be made available in accordance with the Freedom of Information Act (5

U.S.C. 552) and HUD's implementing regulations (24 CFR part 15).

3. *Publication of Recipients of HUD Funding.* HUD will publish a notice in the **Federal Register** to notify the public of all decisions made by HUD to provide:

a. Assistance subject to Section 102(a) of the HUD Reform Act; and

b. Assistance provided through grants or cooperative agreements on a discretionary (non-formula, non-demand) basis, but that is not provided on the basis of a competition.

B. Section 103 of the HUD Reform Act. HUD's regulations implementing Section 103 of the Department of Housing and Urban Development Reform Act of 1989 (42 U.S.C. 3537a), codified at 24 CFR part 4, subpart B, apply to this funding competition. The regulations continue to apply until the announcement of the selection of successful applicants. HUD employees involved in the review of applications and in the making of funding decisions are prevented by the regulations from providing advance information to any person (other than an authorized employee of HUD) concerning funding decisions or from otherwise giving any applicant an unfair competitive advantage. Persons who apply for assistance in this competition should confine their inquiries to the subject areas permitted under 24 CFR part 4. Applicants or employees who have ethics-related questions should contact the HUD Ethics Law Division at (202) 708–3815. (This is not a toll-free number.) HUD employees who have specific program questions should contact the appropriate field office counsel or Headquarters counsel for the program to which the question pertains.

C. Paperwork Reduction Act Statement. The information collection requirements contained in this document are currently approved by OMB under the Paperwork Reduction Act of 1995 (44 U.S.C. 3501–3520) and assigned OMB control number 2502–0267. In accordance with the Paperwork Reduction Act, HUD may not conduct or sponsor, and a person is not required to respond to, a collection of information, unless the collection displays a currently valid OMB control number. Public reporting burden for the collection of information is estimated to average 4 hours per annum per respondent for the application and grant administration. This includes the time for collecting, reviewing, and reporting the data for the application, semi-annual reports, and final report. The information will be used for grantee selection and monitoring the administration of funds. Response to this request for information is required in order to receive the benefits to be derived.

Dated: December 20, 2007.

Brian D. Montgomery,

Assistant Secretary for Housing—Federal Housing Commissioner.

[FR Doc. E8–1119 Filed 1–22–08; 8:45 am]

BILLING CODE 4210–67–P

DEPARTMENT OF THE INTERIOR

Office of the Secretary

Blackstone River Valley National Heritage Corridor Commission; Notice of Meeting

Notice is hereby given in accordance with section 552b of Title 5, United States Code, that a meeting of the John H. Chafee Blackstone River Valley National Heritage Corridor Commission will be held on Thursday, February 28, 2008.

The Commission was established pursuant to Public Law 99–647. The purpose of the Commission is to assist federal, state and local authorities in the development and implementation of an integrated resource management plan for those lands and waters within the Corridor.

The meeting will convene on February 28, 2008 at 9 a.m. at the Blackstone Valley Historical Society Northgate Toll House at 1873 Old Louisquisset Pike, Lincoln, RI.

1. Approval of Minutes.
2. Chairman's Report.
3. Executive Director's Report.
4. Financial Budget.
5. Public Input.

It is anticipated that about twenty-five people will be able to attend the session in addition to the Commission members.

Interested persons may make oral or written presentations to the Commission or file written statements. Such requests should be made prior to the meeting to: Jan H. Reitsma, Executive Director, John H. Chafee, Blackstone River Valley National Heritage Corridor Commission, One Depot Square, Woonsocket, RI 02895, Tel.: (401) 762–0250.

Further information concerning this meeting may be obtained from Jan H. Reitsma, Executive Director of the Commission at the aforementioned address.

Jan H. Reitsma,

Executive Director, BRVNHCC.

[FR Doc. E8–978 Filed 1–22–08; 8:45 am]

BILLING CODE 4310–RK–P

DEPARTMENT OF THE INTERIOR

Fish and Wildlife Service

Endangered and Threatened Wildlife and Plants; Initiation of 5-Year Reviews of 10 Listed Species

AGENCY: Fish and Wildlife Service, Interior.

ACTION: Notice of Review; Request for Information.

SUMMARY: We, the U.S. Fish and Wildlife Service, initiate 5-year reviews of the endangered Peter's Mountain mallow (*Iliamna corei)*, Jesup's milk-vetch (*Astragalus robbinsii* var. *jesupi*), James spinymussel (*Pleurobema collina)*, sandplain gerardia (*Agalinis acuta)*, harperella (*Ptilimnium nodosum)*, Shenandoah salamander (*Plethodon shenandoah)*, American chaffseed (*Schwalbea americana)*, and rough rabbitsfoot (*Quadrula cylindrica strigillata)*, and the threatened Northeastern beach tiger beetle (*Cicindela dorsalis dorsalis)* and Virginia spiraea (*Spiraea virginiana)* under the Endangered Species Act of 1973, as amended (Act). We request any new information on these species that may have a bearing on their classification as endangered or threatened.

Based on the results of these 5-year reviews, we will make a finding on whether these species are properly classified under the Act.

DATES: To allow us adequate time to conduct these reviews, we must receive your information no later than March 24, 2008. However, we will continue to accept new information about any listed species at any time.

ADDRESSES: For instructions on where to submit information and review the information that we receive on these species, see ''Public Solicitation of New Information.''

FOR FURTHER INFORMATION CONTACT: Ms. Mary Parkin, U.S. Fish and Wildlife Service, Northeast Region, 300 Westgate Center Drive, Hadley, MA 01035, 413–253–8617 or 617–876–6173, or via electronic mail at *mary_parkin@fws.gov*. Individuals who are hearing impaired or speech impaired may call the Federal Relay Service at 800–877–8337 for TTY assistance. For species-specific information, contact the appropriate person under ''Public Solicitation of New Information.''

SUPPLEMENTARY INFORMATION:

Why Do We Conduct a 5-Year Review?

Under the Act we maintain the List of Endangered and Threatened Wildlife and Plant Species (List) at 50 CFR 17.11

and 17.12. We amend the List by publishing final rules in the **Federal Register**. Section 4(c)(2)(A) of the Act requires that we conduct a review of listed species at least once every 5 years. Section 4(c)(2)(B) requires that we determine: (1) Whether a species no longer meets the definition of threatened or endangered and should be removed from the List (delisted); (2) whether a species more properly meets the definition of threatened and should be reclassified from endangered to threatened; or (3) whether a species more properly meets the definition of endangered and should be reclassified from threatened to endangered. Using the best scientific and commercial data available, a species will be considered for delisting if the data substantiate that the species is neither endangered nor threatened for one or more of the following reasons: (1) The species is considered extinct; (2) the species is considered to be recovered; and/or (3) the original data available when the species was listed, or the interpretation of such data, were in error. Any change in Federal classification requires a separate rulemaking process. Therefore, we are requesting submission of any such information that has become available since either the original listing or the most recent status review for these species. Based on the results of these 5-year reviews, we will make the requisite findings under section 4(c)(2)(B) of the Act.

Our regulations at 50 CFR 424.21 require that we publish a notice in the **Federal Register** announcing those species currently under review. This notice announces initiation of our active review of the species in Table 1.

TABLE 1.—SUMMARY OF LISTING INFORMATION, 4 WILDLIFE SPECIES AND 6 PLANT SPECIES IN THE NORTHEAST REGION

Common name	Scientific name	Status	Where listed	Final listing rule
ANIMALS				
James spinymussel	*Pleurobema collina*	Endangered	Entire	53 FR 27689; 07/22/1988
Shenandoah salamander	*Plethodon shenandoah*	Endangered	Entire	54 FR 34464; 08/18/1989
Rough rabbitsfoot	*Quadrula cylindrica strigillata*	Endangered	Entire	62 FR 1647; 01/10/1997
Northeastern beach tiger beetle	*Cicindela dorsalis dorsalis*	Threatened	Entire	55 FR 32088; 08/07/1990
PLANTS				
Peter's Mountain mallow	*Iliamna corei*	Endangered	Entire	51 FR 17343; 05/12/1986
Jesup's milk-vetch	*Astragalus robbinsii* var. *jesupi*	Endangered	Entire	52 FR 21481; 06/05/1987
Sandplain gerardia	*Agalinis acuta*	Endangered	Entire	53 FR 34701; 09/07/1988
Harperella	*Ptilimnium nodosum*	Endangered	Entire	53 FR 37978; 09/28/1988
American chaffseed	*Schwalbea americana*	Endangered	Entire	57 FR 44704; 09/29/1992
Virginia spiraea	*Spiraea virginiana*	Threatened	Entire	55 FR 24241; 06/15/1990

What Information Do We Consider in Our Review?

In our 5-year review, we consider all new information available at the time of the review. These reviews will consider the best scientific and commercial data that have become available since the original listing determination or most recent status review of each species, such as: (A) Species biology, including but not limited to population trends, distribution, abundance, demographics, and genetics; (B) habitat conditions, including but not limited to amount, distribution, and suitability; (C) conservation measures that have been implemented to benefit the species; (D) threat status and trends (see five factors under heading ''How do we determine whether a species is endangered or threatened?''); and (E) other new information, data, or corrections, including but not limited to taxonomic or nomenclatural changes, identification of erroneous information contained in the List of Endangered and Threatened Wildlife and Plants, and improved analytical methods.

Public Solicitation of New Information

We request any new information concerning the status of the wildlife species James spinymussel, Shenandoah salamander, rough rabbitsfoot, and northeastern beach tiger beetle, and of the plant species Peter's Mountain mallow, Jesup's milk-vetch, sandplain gerardia, harperella, American chaffseed, and Virginia spiraea. See ''What Information Do We Consider in Our Review?'' for specific criteria. If you submit information, support it with documentation such as maps, bibliographic references, methods used to gather and analyze the data, and/or copies of any pertinent publications, reports, or letters by knowledgeable sources. We specifically request information regarding data from any systematic surveys, as well as any studies or analysis of data that may show population size or trends; information pertaining to the biology or ecology of the species; information regarding the effects of current land management on population distribution and abundance; information on the current condition of habitat; and recent information regarding conservation measures that have been implemented to benefit the species. Additionally, we specifically request information regarding the current distribution of populations and evaluation of threats faced by the species in relation to the five listing factors (as defined in section 4(a)(1) of the Act) and the species' listed status as judged against the definition of threatened or endangered. Finally, we solicit recommendations pertaining to the development of, or potential updates to recovery plans and additional actions or studies that would benefit these species in the future.

Our practice is to make information, including names and home addresses of respondents, available for public review. Before including your address, phone number, electronic mail address, or other personal identifying information in your comment, you should be aware that your entire comment—including your personal identifying information—may be made publicly available at any time. While you can ask us in your comment to withhold your personal identifying information from public review, we cannot guarantee that we will be able to do so.

Mail, electronic mail, or hand-deliver information on the following species to the corresponding address below. You may also view information we receive in response to this notice, as well as other documentation in our files, at the following locations by appointment, during normal business hours.

Peter's Mountain mallow: U.S. Fish and Wildlife Service, 73 Weir Hill Road, Sudbury, MA 01776, Attention: Anne Hecht. You may direct inquiries to Ms. Hecht at 978–443–4325, *anne_hecht@fws.gov.*

Jesup's milk-vetch: U.S. Fish and Wildlife Service, New England Field

Office, 70 Commercial St., Suite 300, Concord, NH 03301, Attention: Susi von Oettingen. Direct inquiries to Ms. von Oettingen at 603–223–2541, extension 22, *susi_vonoettingen@fws.gov.*

James spinymussel: U.S. Fish and Wildlife Service, Virginia Field Office, 6669 Short Lane, Gloucester, VA 23061, Attention: Cindy Kane. Direct inquiries to Ms. Kane at 804–693–6694, extension 113, *cindy_kane@fws.gov*.

Sandplain gerardia: U.S. Fish and Wildlife Service, Long Island Field Office, 3 Old Barto Road, Brookhaven, NY 11719, Attention: Steve Sinkevich. Direct inquiries to Mr. Sinkevich at 631–776–1401, *steve_sinkevich@fws.gov*.

Harperella: U.S. Fish and Wildlife Service, West Virginia Field Office, 694 Beverly Pike, Elkins, WV 26241, Attention: Laura Hill. Direct inquiries to Ms. Hill at 304–636–6586, extension 18, *laura_hill@fws.gov*.

Shenandoah salamander: U.S. Fish and Wildlife Service, Northeast Region, 300 Westgate Center Drive, Hadley, MA 01035, Attention: Mary Parkin. Direct inquiries to Ms. Parkin at 413–253–8617, or 617–876–6173, *mary_parkin@fws.gov*.

American chaffseed: U.S. Fish and Wildlife Service, New Jersey Field Office, 927 N. Main Street, Bldg D, Pleasantville, NJ 08232, Attention: Annette Scherer. Direct inquiries to Ms. Scherer at 609–383–3938, extension 34, *annette_scherer@fws.gov*.

Rough rabbitsfoot: U.S. Fish and Wildlife Service, Southwest Virginia Field Office, 330 Cummings Street, Abingdon, VA 24210, Attention: Shane Hanlon. Direct inquiries to Mr. Hanlon at 276–623–1233, extension 25, *shane_hanlon@fws.gov*.

Northeastern beach tiger beetle: U.S. Fish and Wildlife Service, Virginia Field Office, 6669 Short Lane, Gloucester, VA 23061, Attention: Mike Drummond. Direct inquiries to Mr. Drummond at 804–693–6694, extension 114, *mike_drummond@fws.gov*.

Virginia spiraea: U.S. Fish and Wildlife Service, Virginia Field Office, 6669 Short Lane, Gloucester, VA 23061, Attention: William Hester. Direct inquiries to Mr. Hester at 804–693–6694, extension 134, *william_hester@fws.gov*.

All electronic information must be submitted in text format or rich text format. Include the following identifier in the subject line of the electronic mail: Information on 5-year review for [name of species], and include your name and return address in the body of your message.

How Are These Species Currently Listed?

Table 1 provides current listing information. Also, the List, which covers all listed species, is also available on our Internet site at *http://endangered.fws.gov/wildlife.html#Species.*

Definitions Related to this Notice?

To help you submit information about the species we are reviewing, we provide the following definitions:

Species includes any species or subspecies of fish, wildlife, or plant, and any distinct population segment of any species of vertebrate, which interbreeds when mature;

Endangered species means any species that is in danger of extinction throughout all or a significant portion of its range; and

Threatened species means any species that is likely to become an endangered species within the foreseeable future throughout all or a significant portion of its range.

How Do We Determine Whether a Species Is Endangered or Threatened?

Section 4(a)(1) of the Act establishes that we determine whether a species is endangered or threatened based on one or more of the five following factors: (A) The present or threatened destruction, modification, or curtailment of its habitat or range; (B) Overutilization for commercial, recreational, scientific, or educational purposes; (C) Disease or predation; (D) The inadequacy of existing regulatory mechanisms; or (E) Other natural or manmade factors affecting its continued existence. Section 4(a)(1) of the Act requires that our determination be made on the basis of the best scientific and commercial data available.

What Could Happen as a Result of Our Review?

For each species under review, if we find new information that indicates a change in classification may be warranted, we may propose a new rule that could do one of the following: (a) Reclassify the species from threatened to endangered (uplist); (b) reclassify the species from endangered to threatened (downlist); or (c) remove the species from the List (delist). If we determine that a change in classification is not warranted, then the species will remain on the List under its current status.

Authority: This document is published under the authority of the Endangered Species Act of 1973, as amended (16 U.S.C. 1531 *et seq.*).

Dated: December 28, 2007.

Wendi Weber,

Acting Regional Director, Northeast Region.

[FR Doc. E8–1108 Filed 1–22–08; 8:45 am]

BILLING CODE 4310–55–P

DEPARTMENT OF THE INTERIOR

Fish and Wildlife Service

Sears Point Wetland and Watershed Restoration Project

AGENCY: Fish and Wildlife Service, Interior.

ACTION: Notice of intent to prepare an environmental impact statement.

SUMMARY: We, the U.S. Fish and Wildlife Service (Service), in coordination with the California Department of Fish and Game (CDFG), are preparing a joint environmental impact report/environmental impact statement (EIR/EIS) for the Sears Point Wetland and Watershed Restoration Project (Project), located in Sonoma County, California. At this early stage in the planning process, the purpose of the Project is to restore natural estuarine ecosystems on diked baylands, while providing public access and recreational and educational opportunities compatible with ecological and cultural resources protection. This scoping notice advises the public that we intend to gather information necessary to prepare an EIS pursuant to the National Environmental Policy Act (NEPA). We encourage the public and other agencies to participate in the NEPA scoping process by sending written suggestions and information on the issues and concerns that should be addressed in the draft EIR/EIS, including the range of suitable alternatives, appropriate mitigation measures, and the nature and extent of potential environmental impacts. Throughout the EIR/EIS process, we will announce additional opportunities for public input.

DATES: To ensure that we have adequate time to evaluate and incorporate suggestions and other input, we must receive comments on or before February 28, 2008.

ADDRESSES: Send written comments or requests to be added to our mailing list to the following address: Christy Smith, Refuge Manager, San Pablo Bay National Wildlife Refuge, U.S. Fish and Wildlife Service, 7715 Lakeville Highway, Petaluma, CA 94954. Alternatively, you may fax written comments to 707–769–8106, or send them by electronic mail to *christy_smith@fws.gov*. Please include the heading ''Sears Point NEPA Scoping Comments'' in your response.

FOR FURTHER INFORMATION CONTACT: Christy Smith, Refuge Manager, San Pablo Bay National Wildlife Refuge, at (707) 769–4200, or John Brosnan, Baylands Program Manager, at (707) 526–6930 x 109.

SUPPLEMENTARY INFORMATION:

Background

At this early stage of the planning process, project goals are to restore the maximum feasible extent of tidal marsh and channel habitats. Where full tidal extent cannot be restored, we would seek to maximize diked wetland functions through management, enhancement, and restoration actions while maintaining viable agricultural uses to the extent compatible. In addition, we would provide public access and recreational and educational opportunities that are compatible with ecological and cultural resources protection.

The project site is located at Sears Point near the intersection of Lakeville-Reclamation Road and State Route 37 (SR 37) in southern Sonoma County, California. The site is also traversed from east to west by an inactive rail line owned by the Sonoma-Marin Area Rail Transit (SMART) District.

The project site is a total of 2,327 acres (ac) owned by the Sonoma Land Trust and is comprised of two large properties, the North Point Joint Venture (NPJV) parcel and the Dickson Ranch parcel, which are situated on the edge of San Pablo Bay between the mouth of the Petaluma River and Tolay Creek. The 1,679-ac NPJV parcel extends both north and south of SR 37. It is bounded on the north by the Infineon Raceway property, on the east by Cougar Mountain (north of SR 37) and Paradise Vineyards (south of SR 37), on the south by the SMART rail line, and on the west by Lakeville-Reclamation Road. The 648-ac Dickson Ranch parcel is located entirely south of Highway 37, and is bounded on the north by the SMART rail line, on the west by Tolay Creek, on the south by San Pablo Bay, and on the west by the outboard levee as it veers bayward from the SMART rail line. The entire Dickson Ranch parcel and 858 acres of the North Point Joint Venture parcel are located within the approved acquisition boundary of the San Pablo Bay NWR.

Site topography ranges from below mean sea level (msl) in portions of the subsided diked baylands along the southern project boundary to approximately 400 feet above msl in the rolling uplands north of SR 37. With the exception of a small number of barns, houses, and outbuildings scattered throughout the project site, the area is predominantly undeveloped, comprising a mixture of tidal, seasonal, and riparian wetlands, streams, and upland habitats.

The project site contains existing or potential suitable habitat for a number of special status species, including the federally listed endangered salt marsh harvest mouse (*Reithrodontomys raviventris*), California clapper rail (*Rallus longirostris obsoletus*), and the federally listed threatened California red-legged frog (*Rana aurora draytonii*). Two federally listed threatened fish species—the Central Valley and Central California Coast steelhead (*Oncorhynchus mykiss*) and green sturgeon (*Acipenser medirostris*)—may also benefit from the project goals. Other species may be addressed as necessary in the EIR/EIS based on further analysis, new information, agency consultation, and public comment.

NEPA Compliance

Information gathered through this scoping process will assist us in preparing a reasonable range of alternatives to address the restoration of the project site at Sears Point. These alternatives are likely to include some activity within the San Pablo Bay National Wildlife Refuge. We will use the EIR/EIS to determine whether to authorize activities within the San Pablo Bay National Wildlife Refuge in order to accomplish project goals. A detailed description of the proposed action and alternatives will be included in the EIR/EIS.

The EIR/EIS will identify the direct, indirect, and cumulative impacts of the alternatives on biological resources, cultural resources, land use, air quality, water quality, water resources, and other environmental resources. It will also identify appropriate mitigation measures for adverse environmental effects.

We will conduct environmental review of the EIR/EIS in accordance with the requirements of NEPA, as amended (42 U.S.C. 4321 *et seq.*), its implementing regulations (40 CFR parts 1500–1508), other applicable regulations, and our procedures for compliance with those regulations. The environmental document will be prepared to meet both the requirements of NEPA and the California Environmental Quality Act (CEQA). The California Department of Fish and Game is the CEQA lead agency. We anticipate that the draft EIR/EIS will be available for public review in Spring 2008.

We are furnishing this notice in accordance with section 1501.7 of the NEPA implementing regulations to obtain suggestions and information from other agencies and the public on the scope of issues to be addressed in the EIR/EIS. We invite written comments from interested parties to ensure identification of the full range of issues.

Before including your address, phone number, e-mail address, or other personal identifying information in your comment, you should be aware that your entire comment—including your personal identifying information—may be made publicly available at any time. While you can ask us in your comment to withhold your personal identifying information from public review, we cannot guarantee that we will be able to do so.

Dated: January 16, 2008.

Ken McDemond,

Acting Regional Director, California Nevada Region.

[FR Doc. E8–1069 Filed 1–22–08; 8:45 am]

BILLING CODE 4310–55–P

DEPARTMENT OF THE INTERIOR

Bureau of Land Management

[CA–169–1220–PG]

Notice of Public Meeting, Carrizo Plain National Monument Advisory Committee

SUMMARY: In accordance with Federal Land Policy and Management Act of 1976 (FLPMA), the Federal Advisory Committee Act of 1972 (FACA), the National Environmental Policy Act of 1969 (NEPA), and the Code of Federal Regulations (40 CFR 1501.7, 43 CFR 1610.2), the United States Department of the Interior, Bureau of Land Management (BLM), Carrizo Plain National Monument Advisory Committee will meet as indicated below:

DATES: The meeting will be held on Saturday, February 23, 2008, at the Carrizo Plain Elementary School, located approximately 2 miles northwest of Soda Lake Road on Highway 58. The meeting will begin at 10 a.m. and finish at 5 p.m. The meeting will focus on a preliminary preferred alternative for the Resource Management Plan/Environmental Impact Statement being developed for the Carrizo Plain National Monument. There will be a public comment period from 3 p.m. to 4 p.m. Lunch will be available for $8.

SUPPLEMENTARY INFORMATION: The nine-member Carrizo Plain National Monument Advisory Committee advises the Secretary of the Interior, through the Bureau of Land Management, on a variety of public land issues associated

with the public land management in the Carrizo Plain National Monument in Central California. At this meeting, Monument staff will present updated information on the progress on the draft Carrizo Plain National Monument Resource Management Plan and the Environmental Impact Statement (RMP/EIS). A preliminary preferred alternative being developed by the Carrizo Managing Partners—BLM, the California Department of Fish and Game and the Nature Conservancy—will be the focus of this meeting. This meeting is open to the public. Depending on the number of persons wishing to comment, and the time available, the time allotted for individual oral comments may be limited. Individuals who plan to attend and need special assistance such as sign language interpretation or other reasonable accommodations should contact BLM as indicated below.

FOR FURTHER INFORMATION CONTACT: Bureau of Land Management, Attention: Johna Hurl, Monument Manager, 3801 Pegasus Drive, Bakersfield, CA, 93308. Phone at (661) 391–6093 or e-mail: *jhurl@blm.gov.*

Dated: January 16, 2007.

Johna Hurl,

Monument Manager, Carrizo Plain National Monument.

[FR Doc. E8–1062 Filed 1–22–08; 8:45 am]

BILLING CODE 4310–40–P

DEPARTMENT OF THE INTERIOR

National Park Service

Notice of Inventory Completion: Florida Museum of Natural History, University of Florida, Gainesville, FL and Southwest Florida Water Management District, Brooksville, FL

AGENCY: National Park Service, Interior.

ACTION: Notice.

Notice is here given in accordance with the Native American Graves Protection and Repatriation Act (NAGPRA), 25 U.S.C. 3003, of the completion of an inventory of human remains in the control of the Florida Museum of Natural History, University of Florida, Gainesville, FL, and in the physical custody of the Southwest Florida Water Management District, Brooksville, FL. The human remains were removed from Tatham Mound, Citrus County, FL.

This notice is published as part of the National Park Service's administrative responsibilities under NAGPRA, 25 U.S.C. 3003 (d)(3). The determinations in this notice are the sole responsibility of the museum, institution, or Federal agency that has control of the Native American human remains. The National Park Service is not responsible for the determinations in this notice.

A detailed assessment of the human remains was made by the Florida Museum of Natural History professional staff in consultation with representatives of the Miccosukee Tribe of Indians of Florida, Seminole Nation of Oklahoma, and Seminole Tribe of Florida (Dania, Big Cypress, Brighton, Hollywood & Tampa Reservations).

In 1986–1987, human remains representing a minimum of 366 individuals were removed from Tatham Mound (8CI203) in Citrus County, FL, as part of a Florida Museum of Natural History research project. No known individuals are identified. No associated funerary objects are included in this notice.

Tatham Mound (8CI203) is a Safety Harbor culture mound. Tatham Mound consists of an earlier, pre-Columbian lower mound that contained human remains that are radiocarbon-dated to circa A.D. 1050. An upper mound contained the human remains of some of the individuals, most of whom were bundle burials in an extremely poor state of preservation. At the time of the Hernando de Soto expedition into the region in 1539, people associated with variants of the Safety Harbor culture lived from north Sarasota County to the Cove of the Withlachoochee, extending inland in Citrus County as far as Tatham Mound itself. Narratives associated with the de Soto expedition record the names of two Native American towns called Vicela and Tocaste in the vicinity of the Cove (but not in the locality of Tatham Mound). The Native American town of Vicela is thought to have been near the modern town of Istachatta in northeast Hernando County, approximately 15 miles southwest of Tatham Mound. No archeological site corresponding to Vicela has been found. North of Vicela, the de Soto expedition accounts mention the Native American town of Tocaste, describing it as being on a large lake. After 1539, Vicela and Tocaste disappear from the historical records. The linguistic affiliation of the Tatham Mound people and their Safety Harbor relatives are unknown. No information on their language, other than a few proper names noted in colonial Spanish documents, exists. Archeological and historical research in Citrus County, which is in the Florida Central Gulf Coast region (including Greater Tampa Bay) has shown that the Safety Harbor culture dates to the period circa A.D. 1000–1650. There is no known relationship between the Safety Harbor people and any modern Native American group. Consequently, the human remains are culturally unidentifiable.

At the time of excavation, the Tatham Mound site (formerly known as the McGregor–Smith tract) was owned by the South Florida Council of the Boy Scouts of America. Acting on the advice of the Council's Native American Advisory Committee, the Council mandated that the human remains be reinterred in the mound at the conclusion of reasonable scientific analysis, and that such reinterment would be in accordance with State of Florida regulations. The analysis of the human remains was carried out at first at East Carolina University and then at the University of North Carolina where analysis was completed. Subsequently, the human remains were transferred to the Southwest Florida Water Management District for storage.

In late 2004, the South Florida Council of the Boy Scouts of America sold the land on which Tatham Mound is located to the Southwest Florida Water Management District, a State of Florida agency. The site is now joined with the Flying Eagle tract. Ownership of the land by Southwest Florida Water Management District affords legal protection for Tatham Mound and places the stewardship of the site under the Florida Division of Historical Resources.

Officials of the Florida Museum of Natural History have determined that, pursuant to 25 U.S.C. 3001 (9–10), the human remains described above represent the physical remains of 366 individuals of Native American ancestry. Officials of the Florida Museum of Natural History also have determined that, pursuant to 25 U.S.C. 3001 (2), a relationship of shared group relationship cannot reasonably be traced between the Native American human remains and any present–day Indian tribe.

The Native American Graves Protection and Repatriation Review Committee (Review Committee) is responsible for recommending specific actions for disposition of culturally unidentifiable human remains. In February 2007, the Florida Museum of Natural History requested that the Review Committee recommend reburial of the human remains of 366 culturally unidentifiable individuals at the Tatham Mound site. The Review Committee considered the request at its April 2007 meeting and recommended the reburial of the culturally unidentifiable human remains. In May 2007, a letter from the Designated Federal Official, writing on behalf of the Secretary of the Interior, recommended reburial of the physical

remains of the 366 culturally unidentifiable individuals contingent on the consent of the Miccosukee Tribe of Indians of Florida, Seminole Nation of Oklahoma, and Seminole Tribe of Florida; publication of a Notice of Inventory Completion in the **Federal Register**; and in accordance with applicable laws. This notice fulfills the requirement of publication. The Florida Museum of Natural History also has received consent from the Miccosukee Tribe of Indians of Florida, Seminole Nation of Oklahoma, and Seminole Tribe of Florida. Artifacts removed from the mound are not being reburied.

Representatives of any other Indian tribe that believes itself to be culturally affiliated with the human remains should contact Jerald T. Milanich, Florida Museum of Natural History, Campus PO Box 117800, Gainesville, FL 32611–7800, telephone (352) 378–0990, before February 22, 2008. Reburial of the human remains, with the consent of the Miccosukee Tribe of Indians of Florida, Seminole Nation of Oklahoma, and Seminole Tribe of Florida may proceed after that date if no additional claimants come forward.

Florida Museum of Natural History is responsible for notifying the Miccosukee Tribe of Indians of Florida, Seminole Nation of Oklahoma, and Seminole Tribe of Florida that this notice has been published.

Dated: November 26, 2007

Sherry Hutt,

Manager, National NAGPRA Program.

[FR Doc. E8–1078 Filed 1–22–08; 8:45 am]

BILLING CODE 4312–50–S

DEPARTMENT OF THE INTERIOR

National Park Service

Notice of Inventory Completion: U.S. Department of Agriculture, Forest Service, Gila National Forest, Silver City, NM and Southwest Museum of the American Indian, Autry National Center, Los Angeles, CA; Correction

AGENCY: National Park Service, Interior.

ACTION: Notice; correction.

Notice is here given in accordance with the Native American Graves Protection and Repatriation Act (NAGPRA), 25 U.S.C. 3003, of the completion of an inventory of human remains and associated funerary objects in the control of the U.S. Department of Agriculture, Forest Service, Gila National Forest, Silver City, NM and in the possession of the Southwest Museum of the American Indian, Autry National Center, Los Angeles, CA. The human remains and associated funerary objects were removed from Tularosa Cave, Catron County, NM.

This notice is published as part of the National Park Service's administrative responsibilities under NAGPRA, 25 U.S.C. 3003 (d)(3). The determinations in this notice are the sole responsibility of the museum, institution, or Federal agency that has control of the Native American human remains and associated funerary objects. The National Park Service is not responsible for the determinations in this notice.

This notice supersedes the Notice of Inventory Completion previously published in the **Federal Register** of October 31, 2007 (FR Doc. E7–21379, pages 61674–61675). This notice corrects the controller of the human remains and associated funerary objects, pursuant to 43 CFR 10.2(a)(3)(ii), as review of the field records and maps associated with the excavation of the site, indicates that the Tularosa Cave is located on Federal lands that are administered by the U.S. Department of Agriculture, Forest Service, Gila National Forest, Silver City, NM. Therefore, the Southwest Museum of American Indian does not have control of the human remains and associated funerary objects. This notice also corrects the consulted tribes and the cultural affiliation of the human remains and associated funerary objects from what had previously been published by the Southwest Museum of the American Indian.

A detailed assessment of the human remains was made by the U.S. Department of Agriculture, Forest Service, Gila National Forest professional staff in consultation with the Hopi Tribe of Arizona; Pueblo of Acoma, New Mexico; and Zuni Tribe of the Zuni Reservation, New Mexico.

In 1905, human remains representing a minimum of one individual were removed from Tularosa Cave in Catron County, NM, by Mr. Peter Goddard Gates (P.G. Gates) as part of the Museum-Gates Expedition, a collaborative excavation funded by the United States National Museum, now the Smithsonian Institution, and amateur archeologist, Mr. Gates. On an unknown date, Mr. Gates transferred the human remains into the possession of the California Institute of Technology as part of the larger P.G. Gates Collection. In 1946, the California Institute of Technology loaned the P.G. Gates Collection to the Southwest Museum of the American Indian. In 2006, the California Institute of Technology transferred possession of the P.G. Gates Collection to the Southwest Museum of the American Indian. No known individual was identified. The four associated funerary objects are one olivella shell bracelet, two mats made of rush, and one fragment of a woven textile of unknown use.

Archeological evidence of both material culture and geographic settlement patterns indicate that Tularosa Cave is an Upland Mogollon site that was inhabited between 300 A.D. - 1300 A.D. Abandonment of nearly all Mogollon homeland sites before the protohistoric period suggests a possible population migration into neighboring Puebloan territory. The territory of the Upland Mogollon stretched from south-central Arizona to south–central New Mexico. The Upland Mogollon territories are claimed, currently inhabited, or used by the Pueblo of Acoma, New Mexico; Hopi Tribe of Arizona; and Zuni Tribe of the Zuni Reservation, New Mexico. Villages had pithouses or pueblo-style houses. Most archeological evidence linking Upland Mogollon to present–day tribes rely on ceramics, which suggest the early establishment of brownware producing groups. Based on material culture, architecture, and site organization, the Tularosa Cave has been identified as rock shelter occupied between A.D. 500–1300. Present–day descendents of the Upland Mogollon are the Pueblo of Acoma, New Mexico; Hopi Tribe of Arizona; and Zuni Tribe of the Zuni Reservation. Oral traditions presented by representatives of the Pueblo of Acoma, New Mexico; the Hopi Tribe of Arizona; and Zuni Tribe of the Zuni Reservation, New Mexico support cultural affiliation.

Officials of the U.S. Department of Agriculture, Forest Service, Gila River National Forest have determined that, pursuant to 25 U.S.C. 3001 (9–10), the human remains described above represent the physical remains of one individual of Native American ancestry. Officials of the U.S. Department of Agriculture, Forest Service, Gila River National Forest also have determined that, pursuant to 25 U.S.C. 3001 (3)(A), the four objects described above are reasonably believed to have been placed with or near individual human remains at the time of death or later as part of the death rite or ceremony. Lastly, officials of the U.S. Department of Agriculture, Forest Service, Gila River National Forest have determined that, pursuant to 25 U.S.C. 3001 (2), there is a relationship of shared group identity that can be reasonably traced between the Native American human remains and associated funerary objects and the Hopi Tribe of Arizona; Pueblo of Acoma, New Mexico; and Zuni Tribe of the Zuni Reservation, New Mexico.

Representatives of any other Indian tribe that believes itself to be culturally affiliated with the human remains and associated funerary objects should contact Dr. Frank E. Wozniak, NAGPRA Coordinator, Southwestern Region, USDA Forest Service, 333 Broadway Boulevard SE, Albuquerque, NM 87102, telephone (505) 842–3238, before February 22, 2008. Repatriation of the human remains and associated funerary objects to the Hopi Tribe of Arizona; Pueblo of Acoma, New Mexico; and Zuni Tribe of the Zuni Reservation, New Mexico may proceed after that date if no additional claimants come forward.

The U.S. Department of Agriculture, Forest Service, Gila National Forest is responsible for notifying Hopi Tribe of Arizona; Mescalero Apache Tribe of the Mescalero Reservation, New Mexico; Ohkay Owingeh, New Mexico (formerly the Pueblo of San Juan); Pueblo of Acoma, New Mexico; Pueblo of Cochiti, New Mexico; Pueblo of Jemez, New Mexico; Pueblo of Isleta, New Mexico; Pueblo of Laguna, New Mexico; Pueblo of Nambe, New Mexico; Pueblo of Picuris, New Mexico; Pueblo of Pojoaque, New Mexico; Pueblo of San Felipe, New Mexico; Pueblo of San Ildefonso, New Mexico; Pueblo of Sandia, New Mexico; Pueblo of Santa Ana, New Mexico; Pueblo of Santa Clara, New Mexico; Pueblo of Santo Domingo, New Mexico; Pueblo of Taos, New Mexico; Pueblo of Tesuque, New Mexico; Pueblo of Zia, New Mexico; and Zuni Tribe of the Zuni Reservation, New Mexico that this notice has been published.

Dated: November 26, 2007

Sherry Hutt,

Manager, National NAGPRA Program.

[FR Doc. E8–1112 Filed 1–22–08; 8:45 am]

BILLING CODE 4312–50–S

INTERNATIONAL TRADE COMMISSION

Agency Form Submitted for OMB Review

AGENCY: United States International Trade Commission.

ACTION: In accordance with the provisions of the Paperwork Reduction Act of 1995 (44 U.S.C. Chapter 35), the Commission has submitted a request for emergency processing for review and clearance of questionnaires to the Office of Management and Budget (OMB). The Commission has requested OMB approval of this submission by COB February 19, 2008.

DATES: *Effective Date:* January 17, 2008.

Purpose of Information Collection: The forms are for use by the Commission in connection with Inv. Nos. AGOA–002, *Denim Fabric: Use in AGOA Countries During Fiscal Year 2007,* and AGOA–003, *Denim Fabric: Commercial Availability in AGOA Countries During Fiscal Year 2009,* instituted under section 112(c) of the African Growth and Opportunity Act, as amended (19 U.S.C. 3721(c)). The Commission expects to deliver its reports to the President and the U.S. Trade Representative by July 1, 2008 (Inv. No. AGOA–002) and August 1, 2008 (Inv. No. AGOA–003), respectively.

Summary of Proposal

(1) *Number of forms submitted:* Two.

(2) *Title of forms:* U.S. Importers' Questionnaire: Apparel Made from Subject Denim from Beneficiary Sub-Saharan African Countries; and Apparel Manufacturers' Questionnaire-Purchases of Certain Denim from Beneficiary Sub-Saharan African Countries.

(3) *Type of request:* New.

(4) *Frequency of use:* Single data gathering scheduled for 2008.

(5) *Description of respondents:* U.S. importers of apparel from lesser-developed beneficiary sub-Saharan African using certain denim, and certain denim apparel manufacturers located in lesser developed beneficiary sub-Saharan African countries.

(6) *Estimated number of respondents:* 83 (Importers' questionnaires)

45 (Apparel manufacturers' questionnaires).

(7) *Estimated total number of hours for all respondents combined to complete the forms:* 422 hours.

(8) Information obtained from the form that qualifies as confidential business information will be so treated by the Commission and not disclosed in a manner that would reveal the individual operations of a firm.

Additional Information Or Comment: Copies of the forms and supporting documents may be obtained from the Commission's Web site at *http://www.usitc.gov/ind_econ_ana/research_ana/Ongoing_Inv/index.htm* or for Inv. No. AGOA–002 from Justino De La Cruz, Co-Project Leader (202–205–3252, *Justino.Delacruz@usitc.gov*) of the Office of Economics or Dawn Heuschel, Co-Project Leader (202–205–2577, *Dawn.Heuschel@usitc.gov*) of the Office of Industries; for Inv. No. AGOA–003 from Kimberlie Freund, Project Leader (202–708–5402, *Kimberlie.Freund@usitc.gov*) or Andrea Boron, Deputy Project Leader (202–205–3433, *Andrea.Boron@usitc.gov*) of the Office of Industries. Comments about the proposals should be directed to the Office of Management and Budget, Office of Information and Regulatory Affairs, Room 10102 (Docket Library), Washington, DC 20503, ATTENTION: Docket Librarian. All comments should be specific, indicating which part of the questionnaire is objectionable, describing the concern in detail, and including specific suggested revisions or language changes. Copies of any comments should be provided to Robert Rogowsky, Director, Office of Operations, U.S. International Trade Commission, 500 E Street, SW., Washington, DC 20436, who is the Commission's designated Senior Official under the Paperwork Reduction Act.

Persons with mobility impairments who will need special assistance in gaining access to the Commission should contact the Secretary at 202–205–2000. Hearing impaired individuals are advised that information on this matter can be obtained by contacting our TTD terminal (telephone no. 202–205–1810). General information concerning the Commission may also be obtained by accessing its Internet server (*http://www.usitc.gov*).

Issued: January 17, 2008.

By order of the Commission.

Marilyn R. Abbott,

Secretary to the Commission.

[FR Doc. E8–1138 Filed 1–22–08; 8:45 am]

BILLING CODE 7020–02–P

DEPARTMENT OF JUSTICE

Drug Enforcement Administration

[Docket No. 03–21]

Medicine Shoppe-Jonesborough; Denial of Motion for Stay

On December 13, 2007, I, the Deputy Administrator of the Drug Enforcement Administration, having concluded that the continued registration of the Medicine Shoppe-Jonesborough (Respondent) as a retail pharmacy ''is inconsistent with the public interest,'' 21 U.S.C. 823(f), ordered that its registration be revoked effective February 1, 2008. 73 FR 363, 388 (2008). Thereafter, on December 28, 2007, Respondent, through its counsel, moved to stay the decision and order to allow it to ''appeal the decision to the United States Court of Appeals.'' Motion for Stay at 1.

As grounds for the stay, Respondent contends that it ''and its owner will suffer irreparable harm by the denial of a stay pending the conclusion of the appeal'' because ''[t]he store will have to be closed or liquidated and the source

of the family's income will be gone.'' *Id.* Respondent further contends that granting the stay will not cause irreparable harm to the public because the ''matter has been pending now for almost five years.'' *Id.* Relatedly, Respondent argues that ''[t]here has been no allegation of any wrongdoing during that period.'' *Id.*

Respondent further contends that it has ''a substantial likelihood of success'' on the merits of its appeal. *Id.* In this regard, Respondent relies on the Administrative Law Judge's Recommended Decision, which concluded that its continued registration would be consistent with the public interest. Respondent thus argues that the ALJ's ''findings of fact certainly indicate that reasonable people can disagree strongly as to whether the respondent was operating in violation of the public interest.'' *Id.* at 1–2.

In determining whether a stay should be granted, DEA applies the traditional four-factor test used by the courts. The factors are: (1) Whether the movant has demonstrated a substantial likelihood of success on the merits; (2) whether the movant will be irreparably injured absent a stay; (3) whether issuance of a stay will substantially injure the other interested parties; and (4) where the public interest lies. *See, e.g., ACLU* v. *NSA*, 467 F.3d 590 (6th Cir. 2006); *Pearce* v. *DEA*, 836 F.2d 1028, 1029 (6th Cir. 1988). Moreover, as the Sixth Circuit recently explained, ''[m]ore than a possibility of success must be shown, and even if a movant demonstrates irreparable harm that decidedly outweighs any potential harm to the nonmoving party if a stay is granted, he is still required to show, at a minimum, 'serious questions going to the merits.' '' *ACLU* v. *NSA*, 467 F.3d at 590 (citations omitted in original).

Here, Respondent asserts that it will suffer irreparable harm because the revocation of its registration will result in its closure or liquidation. Motion at 1. Respondent, however, offers no evidence that the loss of its registration has also resulted in the loss of its state pharmacy license, and presumably, Respondent retains authority under state law to dispense non-controlled prescription drugs. Moreover, Respondent can also sell drugs approved for over-the-counter marketing and numerous other non-drug products. Accordingly, while the revocation of its registration may cause it to lose some of its business, Respondent has not established that it will suffer irreparable harm to the extent it alleges.

Furthermore, even assuming that Respondent has established that it will be irreparably harmed, it has not raised any ''serious questions going to the merits.'' *ACLU* v. *NSA*, 467 F.3d at 590. While Respondent invokes the factual findings and conclusions of law contained in the ALJ's opinion in support of its contention that it has ''a substantial likelihood of success on the merits,'' it has not demonstrated that a single factual finding of the Agency is unsupported by substantial evidence. *See* 5 U.S.C. 706(2). Nor has it pointed to any specific error in the Agency's legal conclusions. *Id.* Respondent therefore has not established ''a serious question going to the merits of his appeal, much less a substantial likelihood of success'' on the merits of its petition for review to warrant the issuance of a stay.[1] *Pearce*, 836 F.2d. at 1029.

Accordingly, Respondent's motion for a stay of the order of revocation is denied.

Dated: January 10, 2008.

Michele M. Leonhart,

Deputy Administrator.

[FR Doc. E8–1021 Filed 1–22–08; 8:45 am]

BILLING CODE 4410–09–P

[1] Respondent further cites the lengthy time it took to resolve this proceeding to argue that the issuance of a stay will not harm the public. Motion at 1. While it is true that this proceeding took entirely too long to resolve, there were multiple causes of the delay including, but not limited to, the lengthy continuance which Respondent was granted to prepare its defense. Having found—based on the extensive evidence that Respondent filled prescriptions in violation of federal law, could not properly account for its controlled substances, and offered no evidence that it had reformed its practices—that Respondent's ''continued registration is inconsistent with the public interest,'' 73 FR at 388, I further conclude that Respondent has failed to show that the public interest lies with staying the order of revocation.

DEPARTMENT OF LABOR

Employment and Training Administration

Notice of Availability of Funds and Solicitation for Grant Applications for High Growth Job Training Initiative Grants for the Energy Industry and Construction and Skilled Trades in the Energy Industry

Solicitation for Grant Applications

Announcement Type: New. Notice of solicitation for grant applications.

Funding Opportunity Number: SGA/DFA PY 07–07.

Catalog of Federal Domestic Assistance CFDA Number: 17.268.

Key Dates: The closing date for receipt of applications under this announcement is March 25, 2008. Applications must be received at the address below no later than 4 p.m. (Eastern Time). A Webinar for prospective applicants will be held for this grant competition on February 1, 2008. Access information for the Webinar will be posted on the U.S. Department of Labor's (DOL), Employment and Training Administration (ETA) Web site at: *http://www.workforce3one.org.*

Summary: Under the President's High Growth Job Training Initiative (HGJTI), DOL/ETA, announces the availability of approximately $10 million in grant funds for high-impact regional approaches to meet the workforce challenges of the energy industry and/or address the shortage of construction and skilled trade workers needed to maintain and expand the energy industry infrastructure.

The President's HGJTI is a strategic effort to prepare workers for new and increasing job opportunities in high-growth, high-demand, and economically vital industries and sectors of the American economy. Through the initiative, ETA identifies high-growth, high-demand industries, evaluates the skill needs of those industries, and funds local and national partnership-based demonstration projects that: (a) Address industry-specific workforce challenges within the context of regional talent and economic development strategies; and (b) prepare workers for good jobs with career pathways in these rapidly expanding or transforming industries. ETA will broadly disseminate the products, models, and effective approaches that result from HGJTI investments to employers, education and training providers, and the workforce system, building their capacity to respond to employers' workforce needs in high-growth, high-demand industries that are a part of regional economies.

Grant funds awarded under this Solicitation for Grant Applications (SGA) should be used to implement and replicate high-impact, industry-driven training solutions that address identified workforce challenges in the energy industry or in the construction and skilled trade occupations that support the energy industry. Each solution must take place in the context of a regional talent development strategy designed to contribute to a strong regional economy. The solutions must be developed and implemented by a strategic regional partnership, which includes leaders from the workforce investment system, business and industry, and the education and training community, as well as other public and private sector partners that bring critical assets to the joint venture. Proposed

solutions should take full advantage of existing workforce development models, promising practices, and tools. Solutions must implement an existing promising solution, model, or approach and take it to scale in the region, or adapt a solution that has been demonstrated to have positive impact on the identified workforce development challenges in another region.

Applicants may be public, private for-profit, or private non-profit organizations. It is anticipated that average individual awards will fall within the range of $500,000 to $1 million.

Addresses: Mailed applications must be addressed to the U.S. Department of Labor, Employment and Training Administration, Division of Federal Assistance, Attention: Ariam Ferro, Grants Management Specialist, Reference SGA/DFA PY–07–07, 200 Constitution Avenue, NW., Room N4716, Washington, DC 20210. Applicants may alternatively apply online through Grants.gov (*http://www.grants.gov*) and further information about applying online can be found in Part IV (3) of this solicitation. Telefacsimile (FAX) applications will not be accepted. Applicants are advised that U.S. Postal Service mail delivery in the Washington area may be delayed due to mail decontamination procedures. Hand delivered proposals will be received at the above address.

Supplementary Information: This solicitation consists of eight parts:

- Part I provides the funding opportunity description: It contains background information on the HGJTI and workforce challenges facing the energy sector, including the shortage of construction and skilled trade workers; describes ETA's approach to talent development in the context of regional economies; and provides a description of the critical elements for this solicitation.
- Part II describes the award amount and performance period of the award.
- Part III describes eligible applicants and other grant specifications.
- Part IV provides information on the application and submission process and various funding restrictions.
- Part V describes the criteria against which applications will be reviewed and explains the proposal review and selection process.
- Part VI provides award administration information.
- Part VII contains ETA agency contact information.
- Part VIII lists additional resources of interest to applicants and other information.

Part I. Funding Opportunity Description

1. The President's High Growth Job Training Initiative: Investing in Regional Sector-Based Talent Development Strategies To Support Strong Regional Economies

In the 21st Century global economy, talent development is a key factor in our nation's economic competitiveness. While global competition is typically seen as a national challenge, regions are where companies, workers, researchers, entrepreneurs and governments partner and leverage resources to create the competitive advantages required in the global marketplace. Those advantages stem from the ability to transform new ideas and new knowledge into advanced, high quality products or services. Regions that are successful in creating a competitive advantage demonstrate the ability to organize people, institutions, capital and infrastructure in a way that generates growth and prosperity in the region's economy. In the new global economy, a region's ability to develop, attract, and retain a well-educated and skilled workforce is a key factor in our nation's economic competitiveness. This understanding of the role of talent in regional economies is helping to shape new models of workforce development in which the workforce system acts as a strategic partner in regional economic development.

To maximize the impact of talent development activities requires strong strategic partnerships composed of individuals and organizations that act in concert to transform the regional economy, including: The workforce investment system; employers; educators and training providers; economic development entities; local, regional, and state government; the philanthropic community; faith-based and community organizations; research institutions; and other civic leaders with a stake in economic growth and talent development. These strategic partnerships should focus on systemic solutions that address short-term challenges while contributing to long-term talent development and economic growth.

A regional approach to talent development brings together all the key players in a region to leverage their collective public and private sector assets and resources, and to devise strategies that focus on infrastructure, investment, and talent development. It incorporates demand-driven skills development into the region's larger economic development, and education efforts into a comprehensive system that is both flexible and responsive to the needs of business and workers.

ETA has modeled the role of strategic partnerships in demand-driven workforce investment through the HGJTI. Through the HGJTI, ETA identifies high-growth, high-demand industries; evaluates their skill needs; and funds local and national partnership-based demonstration projects that provide workforce solutions to ensure that individuals can gain the skills to get good jobs with career pathways in rapidly expanding or transforming industries. Many early HGJTI investments focused on individual solutions in the context of small local partnerships. Over time, ETA has expanded that model in several ways. Through the Community-Based Job Training Grants, ETA is building the capacity of the nation's community college system to play a critical role in talent development. Through the Workforce Innovation in Regional Economic Development (WIRED) initiative, ETA supports broad regional partnerships as they expand employment and advancement opportunities for American workers and catalyze the creation of high-skill and high-wage opportunities in the regional economies.

Based on lessons learned in all three of these funding initiatives, ETA is using this funding opportunity to build on individual solutions developed for the energy industry and related skilled trades sector and connecting those solutions to regional economies. ETA's WIRED initiative is currently modeling this approach to regional talent development, through a strategic framework that provides step by step instructions to regions. More information and tools to help implement your project using the WIRED strategic framework can be found at: *http://www.doleta.gov/WIRED.*

2. Meeting the Demand for a Skilled Workforce in the Energy Industry

The energy industry comprises 4 percent of total Gross Domestic Product (GDP) and employs over one million workers nationwide. ETA has identified the energy industry as a high growth industry on the basis of projected demand for workers, the vital role it plays in the U.S. economy, and because rapid technological change requires workers to have increasingly sophisticated skills. Businesses involved in the energy industry are among the most ubiquitous in our economy. They obtain the resources

necessary to create energy, process or use it as necessary, and deliver energy to all of us, whether it is fuel for our vehicles or power to light our homes and workplaces. The energy industry's share of U.S. GDP is only the beginning of its influence on the U.S. economy. Without access to sufficient supplies of affordable energy, every other sector of the U.S. economy would grind to a halt. Therefore, a well-trained energy workforce is not an energy-industry specific problem only, but it is also vital to the nation's economic security.

The workforce dynamics within the energy industry vary by sector. Industry representatives typically speak of four broad sectors within the energy industry: (1) Oil and natural gas; (2) mining; (3) electric; and (4) renewable energy. Although renewable energy can be considered an independent sector, renewable energy technologies are becoming prevalent in most sectors of the energy industry as well as in other industries such as manufacturing and construction. Likewise, nuclear energy is often classified as a fifth sector by itself because the regulatory framework within which it operates, among several other factors, distinguishes it from the rest of the electric power industry. The Bureau of Labor Statistics (BLS) takes a slightly different view of the energy industry, and differentiates utilities, mining, and oil and gas extraction as independent industries. For the purposes of this SGA, the term energy industry refers to all five of the sectors described above.

The energy industry faces significant hiring and training challenges. Impending incumbent worker retirements and other attrition, coupled with inadequate numbers of new workers entering occupations in the industry, necessitate the development and implementation of effective strategies for recruiting and training new workers, and upgrading the skills of existing workers.

To understand the workforce challenges facing the energy industry and construction and skilled trades in the energy industry, ETA convened a series of meetings over the past three years, working closely with energy representatives, construction companies, education, the public workforce system, labor management organizations, and other Federal and state agencies. Through a series of Executive Forums, key energy industry stakeholders identified workforce challenges in five categories: (1) Pipeline development; (2) career awareness and outreach; (3) availability and capacity of education and training programs; (4) entry-level skill development; and (5) incumbent workers skill development. The following challenges were identified as the most critical by industry leaders:

- Employers expect that up to half of their current workers will retire over the next 5 to 10 years.
- Misperception of energy careers as unstable, dirty, and low-skilled causes qualified workers, especially youth, to be unaware of the many highly skilled, good-paying career opportunities.
- Many training programs were scaled back or closed due to a downturn in the industry in the late 1980s and early 1990s. Programs have not ramped up at the same rate as the industry's need has rebounded.
- Employers in all sectors of the industry need workers who are more proficient in math, science, and, especially, technology than workers in the past.
- Creative solutions are necessary to help experienced workers, who will be retiring, transfer their knowledge and skills to their replacements and to help new workers gain necessary skills as quickly as possible.
- Few industry-defined, portable credentials have been developed in the energy industry. Additionally, there is a need to develop career ladders that clearly demonstrate the career growth potential within the industry.

Based on solutions identified during several Executive and Workforce Forums, ETA awarded a series of grants under the HGJTI that addressed the above challenges through unique and innovative industry-driven skills training, certification and career ladder development programs. A full description of these investments, as well as a report detailing ETA's engagement with the energy sector, is available at: *http://www.doleta.gov/BRG/Indprof/Energy.cfm.* These initial investments resulted in curricula, outreach materials, and other products, models, and best practices that are now publicly available on the Web at: *http://www.workforce3one.org.*

Growth within the energy industry is further constrained by a shortage of construction and skilled trade workers who build new infrastructure, install equipment, operate facilities, and make repairs. A number of occupations and job titles are impacted by this shortage, including the following: boilermaker, carpenter, chemistry technician, electrician, heavy equipment operator, lineworker, millwright, pipefitter, quality control technician, and welder.

To help improve the pipeline of construction and skilled trade workers in the energy industry, ETA convened an Energy Skilled Trades Summit in August, 2007. Held in conjunction with industry associations, the summit was designed to address the workforce shortages projected specifically for the southeastern United States over the next twenty years. The objectives of the Summit were to: (1) Raise awareness about the looming skilled craft shortage and its impact on the energy industry's infrastructure improvement efforts; (2) increase synergy among the private sector and the workforce development, economic development, and education systems; and (3) strengthen U.S. national economic and energy security by identifying strategies to ensure American workers have the skills necessary to build and maintain the next generation of energy infrastructure. State teams attended the Summit and worked to develop action plans to address the workforce challenges facing the industry and achieve the following:

- Raise awareness about the looming construction labor shortage and its impact on the energy industry's infrastructure improvement efforts;
- Elevate the image of skilled crafts careers;
- Implement performance-based education and training programs for skilled craft workers in high schools, post-secondary schools, and the public workforce system;
- Recruit from untapped labor pools to educate and train for construction and energy workforce needs;
- Align investments and workforce development initiatives to ensure collaboration in the development of a national skilled trades workforce; and
- Build state partnership teams that promote talent and economic development based on asset and resource mapping strategies.

More information about the Energy Skilled Trades Summit, including extensive resources on workforce challenges facing the construction and skilled trades in the energy industry, as well as a draft competency model for the energy industry, is available at: *http://www.workforce3one.org/content/public/esummit.cfm.*

This SGA is designed to help regions address workforce challenges facing the energy industry and the construction and skilled trades in the energy industry as discussed in this section. ETA is seeking to fund proposals that build on demonstrated models and promising practices and make use of existing products, models, and curricula to meet the specific needs of regional economies through training and other activities.

3. Critical Elements of High Growth Grants for the Energy Industry and Related Skilled Trades

Grants funded under this Solicitation are expected to contain at least six critical elements. These elements consist of: (A) Strategic regional partnerships; (B) systemic solutions to industry-identified workforce challenges; (C) connections to regional economic and talent development strategies; (D) shared and leveraged resources; (E) clear and specific outcomes; and (F) clear strategies for sustainability beyond the Federal investment. Each of these characteristics will be reflected in the ratings criteria in Part V and is described in further detail below.

A. Strategic Regional Partnerships

Experience has shown—through ETA's work in WIRED regions—that workforce development strategies are most robust when developed in the context of a strategic partnership comprised of a strong team of regional leaders that have access to a range of resources and assets suited to the proposed strategy. For the purposes of this SGA, one or more representative of the workforce system (i.e., state and/or local workforce boards and One-Stop Career Centers), employers, and education and training providers are required partners. In addition to the required entities, the partnership should think beyond geographical and physical boundaries to ensure that the full range of assets, resources, knowledge, and leadership are engaged in the project, and that the partnership includes entities that can act as levers of change to identify and address barriers to success.

The basis of partnership engagement and activity should be a data-driven analysis of workforce development challenges and the regional assets available for solutions. While the activities proposed under this Solicitation may be an important component of the partnership's work, the partnership should have a broader focus on the workforce challenges facing the energy industry and related skilled trades sector, and should be working collaboratively to identify and implement a wide range of solutions.

Partners should have a demonstrated record of close collaboration and coordination. If a high level of collaboration or coordination does not exist, applicants must demonstrate their capacity to quickly establish these links and discuss strategies for strengthening the partnership. Applicants are advised that grant funds may not be used for partnership development.

In order to further support regions that are seeking to transform their economies and enhance their global competitiveness through talent development, these partnerships need to be substantial and sustainable. ETA encourages partners to plan for the partnership's sustainability beyond the HGJTI investment period to enable ongoing assessment of industry workforce needs and collaborative development of solutions on a continual basis.

Within the context of the broader strategic partnership and as it relates to the HGJTI, each collaborative partner should have clearly defined roles. The exact nature of these roles may vary depending on the issue areas being addressed and the scope and nature of the activities undertaken. However, ETA expects that each collaborative partner will, at minimum, significantly contribute to one or more aspects of the project. For example, employers must be actively engaged in the project and may contribute to many aspects of grant activities such as defining the program strategy and goals, identifying needed skills and competencies, and, where appropriate, hiring qualified training graduates. Education and training providers from the continuum of education (including K–12, community and technical colleges, four year colleges and universities, apprenticeship, and other training entities) should assist in developing industry-driven workforce education strategies in partnership with employers including competency models, curricula, and new learning methodologies.

The workforce investment system may play a number of roles, including identifying and assessing candidates for training, providing wrap-around support services and training funds for qualified individuals, where appropriate, and connecting qualified training graduates to employers that have existing job openings.

Partnerships with faith-based and community organizations are also encouraged. Grantees may elect to sub-award funds to faith-based and community organizations to perform a variety of grant services such as case management, mentoring, and English language programs, among others. Faith-based and community organizations can also provide wrap-around holistic and comprehensive support services, where appropriate. Please note, however, that identifying an organization as a partner does not waive applicable source selection requirements (See Part VI. B, NOTE).

B. Systemic Solutions to Industry Identified Workforce Challenges

Grants funded under this SGA should demonstrate how a demand-driven workforce system can more effectively meet the regional workforce needs of energy and skilled trade employers while at the same time helping workers find quality jobs with promising career pathways. Proposed solutions should be focused and integrated, and should be driven by an accurate and comprehensive understanding of regional, industry-identified workforce challenges and the educational, workforce, and other assets available to support solutions.

Applicants should note that grants under this SGA are not intended to support the development of entirely new solutions for workforce challenges in the energy industry and/or related skilled trade sector. Rather, these grants are intended to support partnerships that either: (a) Take an existing promising solution, model, or approach to scale in the region; and/or (b) adapt a solution, model, or approach that has been demonstrated to have positive impact on the identified workforce challenges in another region or context. Many public and private partners have been developing solutions to workforce challenges and grants funded under this SGA should demonstrate an understanding of that growing body of knowledge. Models or promising practices proposed to be implemented must be evidence-based and supported by data-driven results. Applicants are not limited in the strategies and approaches they may use to implement solutions provided the strategy is well developed, addresses industry-defined regional workforce challenges, and includes training to prepare entry level and/or incumbent workers for the energy industry or construction and skilled trades in the energy industry. To the extent possible, applicants are encouraged to design training activities that: (a) Occur within the context of workforce education that supports long-term career growth, such as an articulated career ladder and lattice; and (b) result in credentials that are industry-recognized and indicate a level of mastery and competence in a given field or function. Please note that ETA is particularly interested in projects that focus on the workforce challenges described in Part 1.2.

While a range of solutions will be considered for funding, ETA encourages applicants to develop solutions that

address one or more of the following areas:

• *Career Awareness and Outreach:* Applicants are encouraged to submit projects that integrate career awareness and outreach into education and training programs, including job-readiness opportunities, job shadowing and information sessions, and field trips. Career awareness and outreach components should clearly address image-related issues associated with the industry (e.g. working conditions, pay, and opportunities for advancement) and leverage existing industry marketing and campaign efforts, including the development of Web sites, videos, podcasts, print and multimedia materials, television ads, and other promotional materials.

• *Building Education and Training Capacity:* Applicants are encouraged to submit projects that enhance the capacity and/or capability of secondary schools, community colleges, proprietary training providers, labor-management organizations, and/or other education and training providers that serve the skilled trade occupations related to energy and/or the energy industry. To the greatest extent possible, applicants should leverage existing curricula and training or certification programs that have demonstrated results. If existing curricula do not meet regional needs, applicants should clearly explain why. Applicants are also encouraged to submit projects that include strategies for facilitating knowledge transfer among incumbent workers or increasing their technical skills or soft skills, and result in demonstrated career ladder progression during the term of the grant. Applicants are also encouraged to utilize technology-based and distance learning models in their education and training programs. Technology-Based Learning (TBL) is transforming the way people learn and can increase the geographic reach of training. TBL can be defined as the learning of content via all electronic technology, including the Internet, intranets, satellite broadcasts, audio and video tape, video and audio conference, Internet conferencing, chat rooms, bulletin boards, Web casts, computer-based instruction and CD–ROM. It encompasses related terms, such as online learning, Web-based learning, computer-based learning and e-learning. For example, a college may convert industry-specific curricula typically offered in traditional classroom settings to technology-based learning (e-learning or online) or develop technology-based learning training programs so that dislocated workers, incumbent workers, and/or new job entrants can access training at any time.

• *Untapped Pools of Labor:* Applicants are encouraged to submit projects that address the recruitment of non-traditional labor pools and include both outreach and preparation strategies, partnerships with community or faith-based organizations or other experienced providers with expertise in working with non-traditional labor pools, and mentorships or other types of support services. Examples of non-traditional labor pools include dislocated workers, individuals with disabilities, women, veterans, military spouses, ex-offenders, new Americans, and out-of-school and at-risk youth who are eligible to work. Projects that serve youth should align with ETA's Youth Vision, where appropriate. Information on ETA's Youth Vision can be found in the Training and Employment Guidance Letter (TEGL) No. 28–05 (*http://wdr.doleta.gov/directives/corr_doc.cfm?DOCN=2224*).

C. Connections to Regional Economic and Talent Development Strategies

Proposed solutions should not be developed in isolation. Rather, to the greatest extent possible, partnership activities and proposed solutions should be aligned with and integrated into the region's broader talent development and economic development strategies and applications will be evaluated on the extent to which such integration is demonstrated. Applicants should clearly indicate alignment and integration, and indicate how the regional strategic partnership working to design and implement the proposed solution is connected to the broader regional strategic talent and economic growth agenda for the region.

D. Shared and Leveraged Resources

HGJTI investments leverage funds and resources from key entities in the strategic partnership. Leveraging resources in the context of strategic partnerships accomplishes three goals: (1) It allows for the pursuit of resources driven by the strategy; (2) it increases stakeholder investment in the project at all levels including design and implementation phases; and (3) it broadens the impact of the project itself. Applications will be scored based on the quality and the degree to which the source and use of leveraged funds are clearly explained and the extent to which they are integrated into the project in support of grant outcomes. Detailed information about the evaluation criteria are found in Part V, 1F.

Leveraged resources include both Federal and non-federal funds and may come from many sources. Businesses, faith-based and community organizations, economic development entities, education systems, and philanthropic foundations often invest resources to support workforce development. In addition, other Federal, state, and local government programs may have resources available that can be integrated into the proposed project. Examples of such programs include other DOL programs such as registered apprenticeship and Job Corps, as well as One-Stop partner programs funded by other Federal agencies, such as Vocational Rehabilitation and Adult Education. ETA encourages HGJTI grantees and their partners to be entrepreneurial as they seek out, utilize, and sustain these resources when creating effective solutions to the workforce challenges identified by the industry.

Applicants are encouraged to submit projects that leverage existing investments. These investments may be active within the region, such as those from ETA funding sources, including WIRED regional funding, Community-Based Job Training Grants and HGJTI funds, or Workforce Investment Act formula funds, or may come from other government, private sector, or philanthropic sources. Applicants are also encouraged to leverage existing investments in products, models, or tools that may be of use in the regional strategy.

E. Clear and Specific Outcomes

HGJTI grants are fundamentally results-oriented and grantees are expected to demonstrate clear and specific outcomes that indicate progress towards addressing the workforce challenges identified by the partnership and that are appropriate to the nature of the solution and the size and scope of the project. Since HGJTI grants result in customized strategies to address local workforce challenges and skill shortages, ETA recognizes that specific outcomes will vary from project to project based on the specific activities proposed by applicants. HGJTI applicants should demonstrate the effectiveness of proposed activities by creating appropriate benchmarks and measuring against them on a regular basis.

• *Training Outcomes:* Training outcomes will include quarterly and cumulative reports on the projected outcomes that include, but are not limited to: enrollment, number completed training, number of certificates awarded, ETA's Common

Measures, number entered into employment related to training; and number receiving wage gains and promotions.

ETA's Common Measures, which are uniform evaluation metrics for job training and employment programs and are an integral part of ETA's performance accountability system. The Common Measures for adults include: (1) Entered employment, (2) job retention, and (3) average earnings increase. For youth, the Common Measures include: (1) Placement in employment or education, (2) attainment of a degree or certificate, and (3) measurable literacy and numeracy gains. The value of implementing Common Measures is the ability to describe the core performance of the workforce system and its partners: how many people found jobs; did they stay employed; and what did they earn. In the recent past, multiple sets of performance measures have burdened states and grantees, as they have required the reporting of performance outcomes based on varying definitions and methodologies. By minimizing the different reporting and performance requirements, common performance measures can facilitate the integration of service delivery, reduce barriers to cooperation among programs, and enhance the ability to assess the effectiveness and impact of the workforce investment system across programs. A detailed description of ETA's policy on the Common Measures can be found in the Training and Employment Guidance Letter (TEGL) No. 17–05 (*http://wdr.doleta.gov/directives/attach/TEGL17–05.pdf*). A basic list of Common Measures is provided as attachment A to TEGL No. 17–05, (*http://wdr.doleta.gov/directives/attach/TEGL17–05_AttachA.pdf*).

ETA is in the process of developing a standard set of reporting requirements for the HGJTI. Upon issuance, ETA will require grantees to submit standardized quarterly reports summarizing the number and types of participants served by grantees, the number of exiters, the number of participants engaged in training activities, and some participant outcomes including common measures. To calculate the common measures for each grantee and for the program as a whole, ETA will require grantees to submit quarterly participant records for exiters that contain the minimum number of elements needed to calculate the common measures. By matching these records wage record information through the Wage Record Interchange System (WRIS), ETA will compute results for common measures on behalf of grantees. These reports and records will help ETA gauge the effectiveness of the HGJTI, identify grantees that could serve as useful models, and target technical assistance appropriately. A copy of the full proposed reporting package can be viewed at: *http://www.doleta.gov/OMBCN/OMB_1205–0NEW_20070530.cfm*.

Please note that the Common Measures provide only part of the information necessary to oversee HGJTI grants effectively. In addition to Common Measures, grantees will be required to report the number and types of credentials awarded to trainees, if appropriate. HGJTI grant recipients may also have additional outcome measures appropriate to their project.

• *Capacity Building Outcomes:* Grantees will be required to report on the status of all capacity building activities under the grant, if applicable; how the activity is linked to the specific training supported under the grant; and, if appropriate, the impact of the capacity building activity, including the exact methodology with operational parameters of how the impact measure is calculated. An example of a capacity building activity where it is appropriate to report impact is for teacher professional development/train-the-trainer activities, in which there are no employment related outcomes for those being trained but grant activities affect other individuals. For example, a grantee uses grant funds to train 10 teachers to work as instructors at a youth summer camp. Then, through the summer, those 10 teachers provide instruction to 100 students. The impact of this teacher professional development capacity building activity is 100, representing the 100 students impacted by the 10 teachers.

Another area where it is appropriate to report impact is career awareness activities. For example, a grantee uses grant funds to develop a Web site to let youth and job changers know about careers in the energy industry as well as its training program. This Web site has 100 unique user visits each month over a three month period. The impact of the Web site for this three month period is 300, based on the total number of unique visits to the Web site. Grantees can use a similar methodology to calculate the impact of other types of career awareness activities, such as the impact of a recruiting seminar attended by job seekers and the impact of brochures distributed at an industry-related career awareness program for youth. Please note that capacity building outcomes and impacts of the proposed project should satisfactorily address the industry-identified workforce need and the capacity constraint identified by the applicant.

Applicants must clearly describe all products, models, curricula, etc. that will be customized or acquired with federal funds through the grant and indicate the impact of the capacity building activity (*e.g.* the number of participants or entities who will benefit from the proposed activities).

ETA will continue to collect from HGJTI grantees data on spending, program activities, participants, and outcomes that are necessary for program management to convey the full and accurate information on the performance of this program to policy makers and stakeholders.

F. Clear Strategies for Sustainability Beyond the Federal Investment

The HGJTI investment should be considered seed funding. Therefore, HGJTI grantees should develop strategies to sustain the project or related partnership activities after the Federal investment ends. Financial resources are an important part of any sustainability strategy; however, they are not the only component. Sustainability is also strengthened by the partnerships formed before and during the grant term; systems, strategies, and processes put in place during the grant period; and the experience gained through implementing a HGJTI grant. All of these may provide the foundation for developing long-term systemic solutions to workforce challenges in high-growth, high-demand industries.

4. Use of Funds/Allowable Activities

Grants funded under this SGA will be funded by H–1B fees as authorized under Section 414(c) of the American Competitiveness and Workforce Improvement Act of 1998 (Pub. L. 105–277, title IV) as amended by Public Law 108–447 (codified at 29 U.S.C. 2916a). These funds are focused on the development of the workforce and may be used to provide job training and related activities to workers to assist them in gaining the skills and competencies needed to obtain and upgrade career ladder employment in the energy industry and/or construction and skilled trades related to the energy industry. Funds available under this Solicitation may only be used for projects that provide training in the occupations and industries for which employers use H–1B visas that generate these funds and the related activities limited to those necessary to support training in such occupations and industries. The training investments under the SGA must focus on high

skilled occupations or occupations requiring significant science, engineering, technology, and math skills. Funds may also be used to enhance the provision of job training services and information as authorized in 29 U.S.C. 2916(a)(2)(B).

Part II. Award Information

1. Award Amount

ETA intends to fund to projects ranging from $500,000 to $1 million; however, this does not preclude funding grants at either a lower or higher amount, or funding a smaller or larger number of projects, based on the type and the number of quality submissions. Applicants are encouraged to submit budgets for quality projects at whatever funding level is appropriate to the project. Nevertheless, applicants should recognize that the funds available through this solicitation are designed to complement additional leveraged resources rather than be the sole source of funds for the proposal.

Applicants should note that selection of an organization as a grantee does not constitute approval of the grant application as submitted. Before the actual grant is awarded, DOL may enter into negotiations about such items as program components, staffing and funding levels, and administrative systems in place to support grant implementation. If the negotiations do not result in a mutually acceptable submission, the Grant Officer reserves the right to terminate the negotiation and decline to fund the application.

2. Period of Performance

The period of grant performance will be up to 36 months from the date of execution of the grant documents. This performance period shall include all necessary implementation and start-up activities as well as participant follow-up for performance outcomes and grant close-out activities. A timeline clearly detailing these required grant activities and their expected completion dates must be included in the grant application. If applied for, and with significant justification, ETA may elect to exercise its option to award no-cost extensions to these grants for an additional period at its own discretion, based on the success of the program and other relevant factors.

Part III. Eligibility Information

1. Eligible Applicants

Applicants may be public, private for-profit, or private non-profit organizations, including faith-based and community organizations. The application must clearly identify the applicant and describe its capacity to administer the HGJTI grant, in terms of both organizational capacity and data management capabilities. Please note that the applicant and fiscal agent must be the same organization. Applications to supplement existing projects are eligible for consideration under this SGA; however, applications for renewal of existing projects will not be considered. For example, a renewal of an existing project would continue the activities and outcomes from a prior grant with no changes. Supplementing an existing or previous project would add substantive new activity components and outcomes.

2. Cost Sharing

Cost sharing or matching funds are not required as a condition for application, but leveraged resources are strongly encouraged and failure to commit and integrate leveraged resources into the project may have a significant impact on an applicant's ability to successfully compete for grant funds. Applications will be scored based on the quality and the degree to which the source and use of leveraged funds are clearly explained, and the extent to which they are integrated into the project in support of grant outcomes. As described in Part V.1., up to 10 points are available for this criterion.

3. Other Eligibility Requirements

A. Demonstrated Partnerships

To be considered for funding under this SGA, the applicant must demonstrate that the proposed project will be implemented by a robust strategic partnership that is regional in nature, as defined by the applicant, and that leveraged resources of the full partnership are in support of the proposed strategy. The partnership must include at least one entity from each of three categories: (1) The workforce investment system, which may include state and local workforce investment boards, state workforce agencies, and One-Stop Career Centers and their partners; (2) the education and training community, which includes the continuum of education from K–12 to community and technical colleges, four year colleges and universities, apprenticeship, and other training entities; and (3) employers and industry-related organizations such as trade associations and labor-management organizations. Additional partners that reflect the character and resources of the region are strongly encouraged.

B. Proposed Solutions

There are two requirements associated with solutions that will be funded under this solicitation.

- *Building on Existing Models and Promising Practices.* This SGA is intended to support workforce development strategies targeting the energy industry and skilled trade occupations related to energy that take full advantage of existing solutions, models, promising practices, and tools while meeting the specific needs and circumstances of the identified region. Therefore applicants must demonstrate that proposed solutions meet at least one of two criteria: (a) The applicant proposes to take an existing promising solution, model, or approach to scale in the region, or (b) the applicant is implementing a solution, model or approach that has been demonstrated to have positive impact on the identified development challenges in another location. To the greatest extent possible, applicants are also encouraged to integrate existing tools and curricula into their proposed grant activities. Applicants should produce outcome information that demonstrates that the approach or model will meet the needs of industry as described in the statement of need.
- *Training Workers for Employment in High-Growth Industries.* All grants funded under this solicitation must include the direct provision of training to individual participants. Applicants are not limited in the strategies and approaches they may employ to implement training activities; however, the training must: (a) Target skills and competencies demanded by the energy industry and skilled trade occupations related to energy; (b) support participants' long term career growth along a defined career pathway such as an articulated career ladder and lattice; and (c) result in an industry-recognized certificate, degree, or license that indicates a level of mastery and competence in a given field or function. The credential awarded to participants should be based on the type of training provided through the grant and the requirements of the targeted occupation, and should be selected based on consultations with industry partners. For example:
- Customized and short-term training should result in a performance-based certification or certificate. This certification may be developed jointly by employers and the project partners, based on defined knowledge and skill requirements for specific high-growth occupations. Performance-based certifications may also be based on

industry recognized curriculum and standards.

• Training in fields with established professional standards and examinations should result in an industry recognized credential or certification.

• In states where licensure is required for the specific occupation targeted by the training, the credentialing requirement should be set accordingly.

• In some instances, training provided under the HGJTI grant may lead to a degree. In these instances, the credential will be the degree itself or the successful completion of coursework required for the degree.

In addition to the required training strategies, applicants may, but are not required to, propose strategies that build capacity to educate and train workers for jobs within the energy and skilled trades sectors. These proposed capacity building efforts must be directly linked to the specific training supported under the grant, and are expected to address significant barriers that impede the ability of the partnership to meet the energy or skilled trade occupations related to energy industry's demand for workforce training. These strategies should not simply address isolated deficits, but rather provide a comprehensive solution to identified capacity challenges as they relate to the energy industry and the skilled trade occupations related to energy.

C. Replication

ETA is currently pursuing an aggressive national dissemination strategy that focuses on widely and publicly distributing grantee products through a network of stakeholders including education and industry partners, and the public workforce system. The products developed through the HGJTI include but are not limited to curriculum, competency models and career ladders, distance learning tools, career awareness and outreach materials, case studies, program management and implementation tools, reports and databases, creation of industry skill centers, and Web sites. HGJTI grantees are required to submit to ETA products developed with grant funding; these products will be included in ETA's dissemination strategy. For example, CDs with available products will be developed and distributed to appropriate education, workforce, and business and industry association partners. In addition, all of these products will be available online at *http://www.workforce3one.org.* Workforce3 One offers the public workforce system, employers, economic development professionals, and education professionals an innovative knowledge network designed to create and support demand-driven communities; one that responds directly to business needs and prepares workers for good jobs in the fastest growing careers. By supporting replicable projects that can be implemented in multiple areas and industries, ETA is able to maximize its investment by expanding the grant's impact beyond the initial grant site and helping additional businesses and workers in other regions.

D. Participants Eligible To Receive HGJTI Training

Generally, the scope of potential trainees is very broad. Training may be targeted to a wide variety of populations, including unemployed individuals and incumbent workers. The identification of targeted and qualified trainees should be part of the larger project planning process by the required partnership and should relate to the workforce issue that is being addressed by the training.

E. Veterans Priority

The Jobs for Veterans Act (Pub. L. 107–288) provides priority of service to veterans and spouses of certain veterans for the receipt of employment, training, and placement services in any job training program directly funded, in whole or in part, by DOL. In circumstances where a grant recipient must choose between two equally qualified candidates for training, one of whom is a veteran, the Jobs for Veterans Act requires that grant recipients give the veteran priority of service by admitting him or her into the program. Please note that to obtain priority of service a veteran must meet the program's eligibility requirements. ETA Training and Employment Guidance Letter (TEGL) No. 5–03 (September 16, 2003) provides general guidance on the scope of the Job for Veterans Act and its effect on current employment and training programs. TEGL No. 5–03, along with additional guidance, is available at the ''Jobs for Veterans Priority of Service'' Web site: *http://www.doleta.gov/programs/vets.*

Part IV. Address To Request Application Forms

1. Address To Request Application Package

This SGA contains all of the information and links to forms needed to apply for grant funding.

2. Content and Form of Application Submission

The proposal must consist of two (2) separate and distinct parts: Part I, the Cost Proposal and Part II, the Technical Proposal. Applications that fail to adhere to the instructions in this section will be considered non-responsive and may not be given further consideration. Please note that it is the applicant's responsibility to ensure that the funding amount requested is consistent across all parts and sub-parts of the application.

Part I of the proposal is the Cost Proposal and must include the following two items:

• The Standard Form (SF) 424, ''Application for Federal Assistance'' available at: *http://www.doleta.gov/sga/sga.cfm.*

• Upon confirmation of an award, the individual signing the SF 424 on behalf of the applicant shall be considered the Authorized Representative of the applicant. All applicants for Federal grant and funding opportunities are required to have a Dun and Bradstreet (DUNS) number. For more information about the DUNS number, see OMB Notice of Final Policy Issuance, 68 FR 38402 (June 27, 2003). Applicants must supply their DUNS number on the SF 424. The DUNS number is a nine-digit identification number that uniquely identifies business entities. Obtaining a DUNS number is easy and there is no charge. To obtain a DUNS number, access this Web site: *http://www.dunandbradstreet.com* or call 1–866–705–5711.

• The Standard Form (SF) 424A Budget Information Form (available at *http://www.doleta.gov/sga/forms.cfm*). In preparing the Budget Information Form, the applicant must provide a concise narrative explanation to support the request. The budget narrative should break down the budget and corresponding leveraged resources by deliverable, making clear distinctions between training and (if any) capacity building costs, and should discuss precisely how the administrative costs support the project goals. All applicants should indicate training costs-per-participant by dividing the total amount of the budget designated for training by the number of participants trained. Please note that applicants that fail to provide an SF 424, SF 424A and a budget narrative will be removed from consideration prior to the technical review process. If the proposal calls for integrating WIA or other Federal funds or includes other leveraged resources, these funds should not be listed on the SF 424 or SF 424A Budget Information

Form, but should be described in the budget narrative and in Part II of the proposal. The amount of Federal funding requested for the entire period of performance (up to 36 months) should be shown together on the SF 424 and SF 424A Budget Information Form. Applicants are also encouraged, but not required, to submit the OMB Survey No. 1890–0014: Survey on Ensuring Equal Opportunity for Applicants, which can be found at: *http://www.doleta.gov/sga/forms.cfm.*

Part II of the application is the Technical Proposal, which demonstrates the applicant's capabilities to plan and implement the HGJTI grant project in accordance with the provisions of this solicitation, and includes a project description as described in the Criteria section of this solicitation.

The project description is limited to twenty (20) double-spaced, single-sided, 8.5 inch x 11 inch pages with 12 point text font and one-inch margins. Any pages over the 20 page limit will not be reviewed. The applicant may provide additional information, such as resumes, a staffing pattern, statistical information, general letters of support and related material in attachments, which may not exceed fifteen (15) pages. Any additional information in attachments beyond the 15 page limit will not be reviewed. The required letters of commitment from partners help demonstrate a firm commitment to the project through the provision of expertise and/or resources and must be submitted as attachments. These letters of commitment will not count against the allowable maximum page totals. Please note that applicants should not send letters of commitment or support separately to ETA because letters are tracked through a separate system and will not be attached to the application for review. The applicant must clearly reference any partners in the text of the Technical Proposal. Except for the discussion of any leveraged resources to address the evaluation criteria, no cost data or reference to prices should be included in the Technical Proposal. The following information is required:

- A one-to-two page abstract summarizing the proposed project and applicant profile information including:
- Applicant name;
- Industry focus (energy and the skilled trade occupations related to energy);
- A brief description of the workforce challenges addressed (100 words);
- A brief description of the proposed solution and how it will be different from the original model (approximately 150 words);
- Key partners;
- Funding amount requested;
- Amount of leveraged resources; and
- Number of people trained and other key grant outcomes.
- A table of contents listing the application sections.
- A one-to-two page timeline outlining project activities, including expected start-up, implementation, participant follow-up for performance outcomes, grant close-out and other activities.

Please note that the abstract, table of contents, and timeline are not included in either of the page limits mentioned above. Applicants that do not provide Part II of the application will be removed from consideration prior to the technical review process.

Applications may be submitted electronically on Grants.gov or in hardcopy via mail or hand delivery. These processes are described in further detail in Part IV(C). Applicants submitting proposals in hard-copy must submit an original signed application (including the SF 424) and one (1) ''copy-ready'' version free of bindings, staples or protruding tabs to ease in the reproduction of the proposal by DOL. Applicants submitting proposals in hard-copy are also requested, though not required, to provide an identical electronic copy of the proposal on CD–ROM.

3. Submission Date, Times, and Addresses

The closing date for receipt of applications under this announcement is March 25, 2008. Applications must be received at the address below no later than 4 p.m. (Eastern Time). Applications sent by e-mail, telegram, or facsimile (FAX) will not be accepted.

Applications that do not meet the conditions set forth in this notice will not be honored. No exceptions to the mailing and delivery requirements set forth in this notice will be granted.

Mailed applications must be addressed to the U.S. Department of Labor, Employment and Training Administration, Division of Federal Assistance, Attention: Ariam Ferro, Reference SGA/DFA, PY–07–07, 200 Constitution Avenue, NW., Room N4716, Washington, DC 20210. Applicants are advised that mail delivery in the Washington area may be delayed due to mail decontamination procedures. Hand-delivered proposals will be received at the above address. All overnight mail will be considered to be hand-delivered and must be received at the designated place by the specified closing date and time.

Applicants may apply online through Grants.gov (*http://www.grants.gov*). Any application received after the deadline will not be accepted. It is strongly recommended that before the applicant begins to write the proposal, applicants immediately review the grants.gov Web site to include all frequently asked questions, and initiate and complete the ''Get Started'' registration steps at *http://www.grants.gov/GetStarted.* These steps may take multiple days to complete, and this time should be factored into plans for electronic application submission in order to avoid facing unexpected delays that could result in the rejection of an application as untimely. If submitting electronically through Grants.gov, the application must be submitted as either .doc, .pdf, or .xls files.

Late Applications: Any application received after the exact date and time specified for receipt at the office designated in this notice will not be considered, unless it is received before awards are made, it was properly addressed, and it was: (a) Sent by U.S. Postal Service mail, postmarked not later than the fifth calendar day before the date specified for receipt of applications (e.g., an application required to be received by the 20th of the month must be postmarked by the 15th of that month); or (b) sent by professional overnight delivery service or properly submitted and accepted by Grants.gov to the addressee not later than one working day prior to the date specified for receipt of applications. It is highly recommended that online submissions be completed at least one working day prior to the date specified for receipt of applications to ensure that the applicant still has the option to submit by overnight delivery service in the event of any electronic submission problems. Applicants take a significant risk by waiting to the last day to submit by grants.gov. ''Postmarked'' means a printed, stamped or otherwise placed impression (exclusive of a postage meter machine impression) that is readily identifiable, without further action, as having been supplied or affixed on the date of mailing by an employee of the U.S. Postal Service. Therefore, applicants should request the postal clerk to place a legible hand cancellation ''bull's eye'' postmark on both the receipt and the package. Failure to adhere to the above instructions will be a basis for a determination of non-responsiveness. Evidence of timely submission by a professional overnight delivery service must be demonstrated by equally reliable evidence created by the delivery service provider indicating the time and place of receipt.

4. Intergovernmental Review

This funding opportunity is not subject to Executive Order 12372, ''Intergovernmental Review of Federal Programs.''

5. Funding Restrictions

Determinations of allowable costs will be made in accordance with the applicable Federal cost principles. Disallowed costs are those charges to a grant that the grantor agency or its representative determines not to be allowed in accordance with the applicable Federal cost principles or other conditions contained in the grant. Successful and unsuccessful applicants will not be entitled to reimbursement of pre-award costs.

A. Indirect Costs. As specified in OMB circular Cost Principles, indirect costs are those that have been incurred, for common or joint objectives and cannot be readily identified with a particular final cost objective. In order to utilize grant funds for indirect costs incurred, the applicant must obtain an Indirect Cost Rate Agreement with its Federal cognizant agency either before or shortly after grant award.

B. Administrative Costs. Under the HGJTI, an entity that receives a grant to carry out a project or program may not use more than 10 percent of the amount of the grant to pay administrative costs associated with the program or project. Administrative costs could be direct or indirect costs, and are defined at 20 CFR 667.220. Administrative costs do not need to be identified separately from program costs on the SF 424A Budget Information Form. They should be discussed in the budget narrative and tracked through the grantee's accounting system. To claim any administrative costs that are also indirect costs, the applicant must obtain an indirect cost rate agreement from its Federal cognizant agency.

C. ETA Distribution Rights. Applicants should note that grantees must agree to provide DOL/ETA a paid-up, non-exclusive and irrevocable license to reproduce, publish, or otherwise use for Federal purposes all products developed or for which ownership was purchased under an award, including but not limited to, curricula, training models, technical assistance products, and any related materials, and to authorize them to do so. Such uses include, but are not limited to, the right to modify and distribute such products worldwide by any means, electronically or otherwise.

D. Legal Rules Pertaining to Inherently Religious Activities by Organizations That Receive Federal Financial Assistance. The government is generally prohibited from providing direct financial assistance for inherently religious activities. See 29 CFR Part 2, Subpart D. These grants may not be used for religious instruction, worship, prayer, proselytizing or other inherently religious activities. Neutral, non-religious criteria that neither favor nor disfavor religion will be employed in the selection of grant recipients and must be employed by grantees in the selection of sub-recipients.

E. Use of Funds for Supportive Services. Use of grant funds for supportive services, such as transportation and childcare, is not an allowable cost under this SGA, including funds provided through stipends for such purposes.

F. Salary and Bonus Limitations. In compliance with Public Law 109–234 and Public Law 110–5, none of the funds appropriated in Public Law 109–149, Public Law 110–5, or prior Acts under the heading ''Employment and Training'' that are available for expenditure on or after June 15, 2006, shall be used by a recipient or sub-recipient of such funds to pay the salary and bonuses of an individual, either as direct costs or indirect costs, at a rate in excess of Executive Level II, except as provided for under section 101 of Public Law 109–149. This limitation shall not apply to vendors providing goods and services as defined in OMB Circular A–133. See Training and Employment Guidance Letter number 5–06 for further clarification: *http://wdr.doleta.gov/directives/corr_doc.cfm?DOCN=2262*

6. Other Submission Requirements

Withdrawal of Applications

Applications may be withdrawn by written notice at any time before an award is made.

Part V. Application Review Information

1. Evaluation Criteria

This section identifies and describes the criteria that will be used to evaluate the HGJTI grant proposals. These criteria and point values are:

Criterion	Points
A. Statement of Need	10
B. Strength of Regional Partnerships	20
C. Strategies and Solutions for Addressing Industry-Identified Workforce Challenges	25
D. Integration with Regional Economic and Talent Development Strategies	5
E. Outcomes, Benefits, and Impact	20
F. Leveraged Resources	10
G. Program Management and Organization Capacity	10

A. Statement of Need (10 points)

Applicants must fully demonstrate a clear and specific need for the Federal investment in the proposed activities by: (a) Describing the role of the energy industry and skilled trade occupations related to energy within the regional economy; (b) describing the workforce challenges facing the industry and their impact on specific local or regional economic and workforce conditions; and (c) describing the resource analysis and mapping that has been conducted to date that demonstrates that local or regional resources are not sufficient to address the workforce challenges. If the applicant intends to include capacity building activities as part of the proposal, this section must also include a detailed discussion of the capacity challenges the community or region faces that limit its ability to provide sufficient quantity or quality of training to meet the identified workforce needs. In addition, applicants should provide evidence that the workforce challenges to be addressed by the grant were identified in the context of the regional talent development strategy in support of economic growth.

Applicants may draw from a variety of resources for supporting data, including: Traditional labor market information, such as projections; industry data; trade associations or direct information from the regional industry; and information on the regional economy and other transactional data, such as job vacancies, that are available. Applicants may also include information collected directly from energy industry employers and representatives. Discussion should include, but is not limited to, the following:

- Demonstrated knowledge of the energy industry and skilled trade occupations related to the energy industry in the regional area, including the impact of the industry on the local or regional economy.
- Demonstrated through data the existence of identified workforce challenges and, if capacity building activities are proposed, demonstrated existence of a capacity constraint in addressing those challenges, in the area in which the grant activity will take place.
- Discussion of how the industry workforce challenges affect the specific employer partners contained in the proposal.

• Description of the economic analysis and resource mapping used to demonstrate need for the Federal investment in identified region and identification of the sources of data used in analyses.

B. Strength of Regional Partnerships (20 points)

The applicant must fully demonstrate that the proposed grant activities were developed and will be implemented by a strategic partnership comprised of a strong team of regional leaders. The partnership must be representative of the entire region as defined by the applicant and have the authority to drive the proposed investment strategy. The proposed partnership must include at least one entity from each of three categories: (1) The workforce investment system; (2) education and training providers such as community colleges; and (3) employers and industry representatives. Applicants must also demonstrate that additional partners have been brought to the table to ensure that the full range of assets, resources, knowledge, and leadership are engaged in the project, and that the partnership includes entities that can act as levers of change to identify and address barriers to success.

Points for this criterion will be awarded based on the following factors:

• *Comprehensiveness of the Partnership (15 points).* The applicant must identify the partners and explain the meaningful role each partner will play in the project. Points for this factor will be awarded based on:

• A comprehensive list of strategic partners that will be included in the project and the articulation of each partner's role in the project within an overall project governance structure. Please note that in order to receive full points applicants must fully demonstrate that each required partner will play a well-developed and committed role in the project. (6 points)

• Demonstration that the partnership includes the key regional assets and institutions necessary to address the identified workforce challenges. If key regional assets and institutions are not currently engaged in the partnership, then the applicant must clearly identify how appropriate organizations or individuals will be brought into the partnership quickly. (9 points)

• *Partnership Management (5 points).* Points for this factor will be awarded based on evidence that the applicant has the capacity to lead the regional partnership in implementing the initiative. Discussion should include, but is not limited to, the applicant's leadership and staff capacity and experience implementing initiatives of this caliber.

C. Strategies and Solutions for Addressing Industry-Identified Workforce Challenges (25 points)

The applicant must describe the proposed workforce development solution strategy in full, including all solution elements and implementation strategies, how the solutions address the workforce challenges described in the statement of need, and how the proposed solution complements or enhances existing ETA investments in the energy industry and skilled trade occupations related to energy, and other activities undertaken by the partnership. Points for this criterion will be awarded for the following factors:

• *Strategy (15 points).* Applicants may earn up to 15 points based on evidence that the applicant has developed an effective solution that will address the following objectives:

• The proposed project will address one or more workforce challenges identified by the energy industry and/or skilled trade occupations related to energy through the HGJTI, as discussed in Part I.a of this SGA (2 points).

• The solution models and workforce development approaches that guide the proposed activities have been clearly explained, and their source identified. The applicant explains how the partnership has drawn upon existing tools and approaches in building its solution (2 points).

• The proposed strategy is cohesive in nature and includes training activities that target skills and competencies demanded by the energy industry and skilled trade occupations related to energy and support participants' long-term career growth along a defined career pathway such as an articulated career ladder and lattice. The proposed training activities should lead to an appropriate credential. Where there is no standardized industry credential in place, part of the proposed activity may include working to create such a credential. If the credential targeted by the training project is a certificate or performance-based certification, applicants have either: (a) Demonstrated employer engagement in the curriculum development process; or (b) indicated that the certification will translate into concrete job opportunities with an employer. If there are proposed capacity building activities, the applicant has demonstrated that these activities are broad based, and are clearly integrated with training activities (8 points).

• The applicant has a robust strategy to sustain proposed activities beyond the Federal investment. The approach to sustainability includes strategies for ensuring that: (a) Partnerships will be institutionalized or otherwise continue to be operational after the grant period ends; (b) the systems, strategies, and solutions created and implemented through the grant will be utilized after the grant period ends; and (c) the project or related partnership activities are integrated into broader state and/or local workforce development and/or economic development activities, if appropriate. To receive full points for this sub-element, the applicant must include a discussion of financial resources beyond the Federal investment that will be used to support sustained activities once the grant expires (3 points).

• *Implementation Strategy (10 points).* Applicants can earn up to 10 points based on evidence that the applicant has a clear understanding of the tasks required to successfully meet the objectives of the grant. Factors considered in evaluating this evidence include: (1) The existence of a strategy that is responsive to the applicant's statement of need and includes specific goals, objectives, activities, and a timeline; (2) the demonstrated feasibility and reasonableness of the timeline for accomplishing all necessary implementation activities, including start-up, capacity building (if applicable) and training activities, participant follow-up for performance outcomes, and grant close-out activities; (3) demonstration that the budget line items are tied to strategy objectives; and (4) the extent to which the budget is justified with respect to the adequacy and reasonableness of resources requested and must be demonstrated throughout the technical proposal.

D. Integration With Regional Economic and Talent Development Strategies (5 points)

Scoring on this criterion will be based on the applicant's ability to demonstrate that their HGJTI project is aligned with and integrated into their region's talent development and economic development strategy. Points for this criterion will be awarded for the following factors:

• Summarizing the region's strategic vision and workforce education strategies in support of talent development and economic growth; and

• Either describing how their capacity building and training solution is part of or complements existing approaches under regional talent development and economic development plans and initiatives; or describing how their proposed project is a catalyst for

bringing partners together to begin the analysis and strategic planning in their region.

E. Outcomes, Benefits, and Impact (20 points)

Applicants must demonstrate a results-oriented approach to managing and operating the HGJTI project by fully describing the proposed outcome measures relevant to measuring the success or impact of the project. Scoring on this criterion will be based on the following factors:

• *Outcomes (10 points).* Applicants may earn up to 10 points for indicating that appropriate outcomes will be tracked as detailed below. Additionally, the description of outcomes must include: (1) Baseline numbers for tracking progress; (2) benchmark outcome goals; and (3) the methods proposed to collect and validate outcome data in a timely and accurate manner.

• *Training.* Applicants must track training outcome measures that include ETA's Common Measures, such as employment placement numbers and/or earnings gains and retention. Other outcome measures that should be tracked include the number of individuals awarded credentials or degrees, and any other outcome measures specific to the proposed training project. Applications must also identify the type of credential that participants will earn as a result of the proposed training, and the employer-, industry-, vendor-, or state-defined standards associated with the credential.

• *Capacity Building.* Applicants that have capacity building components in their projects must clearly describe all products, models, curricula, etc., that will be developed or acquired with Federal funds through the grant and indicate the number of participants or entities who will benefit in either the short and/or long term, from the proposed activities. Applicants must describe the data measures that will be used to measure how the proposed capacity building activities impact the ability of entities to train workers for skills in demand by the energy industry and skilled trade occupations related to energy.

• *Appropriateness of Outcomes (10 points).* Applicants may earn up to 10 points based on three factors: (1) The extent to which the expected project outcomes are clearly identified and measurable, realistic, and consistent with the objectives of the project; (2) the ability of the applicant to achieve the stated outcomes within the timeframe of the grant; and (3) the appropriateness of the outcomes with respect to both the extent of the workforce challenge described in the statement of need and the requested level of funding.

F. Leveraged Resources (10 points)

Applicants must clearly describe any funds and resources leveraged in support of grant activities and demonstrate how these funds will be used to contribute to the goals of the project. This applies to funds leveraged from businesses, faith-based and community organizations, economic development entities, education systems, philanthropic foundations, and/or Federal, state, and local government programs, including WIA, Trade Adjustment Assistance, and Wagner-Peyser.

Scoring on this factor will be based on the extent to which the applicant fully describes the amount, commitment, nature, and quality of leveraged resources. Important elements of the explanation include:

• Evidence, such as letters of commitment or memorandums of understanding (MOUs), that key partners have expressed a clear commitment to provide the resource;

• The nature and quality of the leveraged resources and a description of how each contribution will support the proposed grant activities; and

• The strategic value of the leveraged resources and how well these resources support the proposed grant activities and the goal of this grant solicitation to demonstrate how a demand-driven workforce system can more effectively meet the regional workforce needs of energy and skilled trade employers while at the same time helping workers find quality jobs with promising career pathways.

G. Program Management and Organization Capacity (10 points)

To satisfy this criterion, applicants must describe their proposed project management structure including, where appropriate, the identification of a proposed project manager, discussion of the proposed staffing pattern, and the qualifications and experience of key staff members. Applicants must also show evidence of the use of data systems to track outcomes in a timely and accurate manner. The applicant must include a description of organizational capacity and the organization's track record in projects similar to that described in the proposal and/or related activities of the primary partners.

Scoring under this criterion will be based on the extent to which applicants provide evidence of the following:

• The time commitment of the proposed staff is sufficient to ensure proper direction, management, and timely completion of the project;

• The roles and contribution of staff, consultants, and collaborative organizations are clearly defined and linked to specific objects and tasks;

• The background, experience, and other qualifications of the staff are sufficient to carry out their designated roles; and

• The applicant organization has significant capacity to accomplish the goals and outcomes of the project, including the ability to collect and manage data in a way that allows consistent, accurate, and expedient reporting.

2. Review and Selection Process

Applications for the HGJTI grants under this solicitation will be accepted after the publication of this announcement until the closing date. A technical review panel will make careful evaluation of applications against the criteria. These criteria are based on the policy goals, priorities, and emphases set forth in this SGA. Up to 100 points may be awarded to an application, based on the required information described in Part V(1.). The ranked scores will serve as the primary basis for selection of applications for funding, in conjunction with other factors such as urban, rural, and geographic balance; balance across industry sub-sectors; the availability of funds; and which proposals are most advantageous to the government. The panel results are advisory in nature and not binding on the Grant Officer, and the Grant Officer may consider any information that comes to his/her attention. The government may elect to award the grant(s) with or without discussions with the applicants. Should a grant be awarded without discussions, the award will be based on the applicant's signature on the SF 424, which constitutes a binding offer by the applicant including electronic signature via E-Authentication on *www.grants.gov.*

Part VI. Award Administration Information

A. Award Notices

All award notifications will be posted on the ETA Homepage (*http://www.doleta.gov*). Applicants selected for award will be contacted directly before the grant's execution and non-selected applicants will be notified by mail.

Note: Selection of an organization as a grantee does not constitute approval of the

grant application as submitted. Before the actual grant is awarded, DOL/ETA may enter into negotiations about such items as program components, staffing and funding levels, and administrative systems in place to support grant implementation. If the negotiations do not result in a mutually acceptable submission, the Grant Officer reserves the right to terminate the negotiation and decline to fund the application.

B. Administrative and National Policy Requirements

1. Administrative Program Requirements

All grantees will be subject to all applicable Federal laws, regulations, and the applicable OMB Circulars. The grant(s) awarded under this SGA will be subject to the following administrative standards and provisions, if applicable:

a. Workforce Investment Act—20 Code of Federal Regulations (CFR) part 667. (General Fiscal and Administrative Rules).

b. Non-Profit Organizations—OMB Circulars A–122 (Cost Principles) and 29 CFR part 95 (Administrative Requirements).

c. Educational Institutions—OMB Circulars A–21 (Cost Principles) and 29 CFR part 95 (Administrative Requirements).

d. State and Local Governments—OMB Circulars A–87 (Cost Principles) and 29 CFR part 97 (Administrative Requirements).

e. Profit Making Commercial Firms—Federal Acquisition Regulation (FAR)—48 CFR part 31 (Cost Principles), and 29 CFR part 95 (Administrative Requirements).

f. All entities must comply with 29 CFR parts 93 and 98, and, where applicable, 29 CFR parts 96 and 99.

g. The following administrative standards and provisions may also be applicable:

i. 29 CFR part 2, subpart D—Equal Treatment in Department of Labor Programs for Religious Organizations, Protection of Religious Liberty of Department of Labor Social Service Providers and Beneficiaries;

ii. 29 CFR part 30—Equal Employment Opportunity in Apprenticeship and Training;

iii. 29 CFR part 31—Nondiscrimination in Federally Assisted Programs of the Department of Labor—Effectuation of Title VI of the Civil Rights Act of 1964;

iv. 29 CFR part 32—Nondiscrimination on the Basis of Handicap in Programs and Activities Receiving or Benefiting from Federal Financial Assistance;

v. 29 CFR part 33—Enforcement of Nondiscrimination on the Basis of Handicap in Programs or Activities Conducted by the Department of Labor;

vi. 29 CFR part 35—Nondiscrimination on the Basis of Age in Programs or Activities Receiving Federal Financial Assistance from the Department of Labor;

vii. 29 CFR part 36—Nondiscrimination on the Basis of Sex in Education Programs or Activities Receiving Federal Financial Assistance; and/or

vii. 29 CFR part 37—Implementation of the Nondiscrimination and Equal Opportunity Provisions of the Workforce Investment Act of 1998.

In accordance with Section 18 of the Lobbying Disclosure Act of 1995 (Pub. L. 104–65) (2 U.S.C. 1611) non-profit entities incorporated under Internal Revenue Service Code section 501(c) (4) that engage in lobbying activities are not eligible to receive Federal funds and grants.

Note: Except as specifically provided in this SGA, DOL/ETA's acceptance of a proposal and an award of Federal funds to sponsor any programs(s) does not provide a waiver of any grant requirements and/or procedures. For example, the OMB Circulars require that an entity's procurement procedures must ensure that all procurement transactions are conducted, as much as practical, to provide open and free competition. If a proposal identifies a specific entity to provide services, the DOL/ETA's award does not provide the justification or basis to sole source the procurement, *i.e.*, avoid competition, unless the activity is regarded as the primary work of an official partner to the application.

2. Special Program Requirements

Evaluation. DOL may require that the program or project participate in an evaluation of overall HGJTI grant performance. To measure the impact of grants funded under the HGJTI, ETA may arrange for or conduct an independent evaluation of the outcomes and benefits of the projects. Grantees must agree to make records on participants, employers, and funding available and to provide access to program operating personnel and to participants, as specified by the evaluator(s) under the direction of ETA, including after the expiration date of the grant.

C. Reporting

The grantee is required to provide the reports and documents listed below:

Quarterly Financial Reports. A Quarterly Financial Status Report (9130) is required until such time as all funds have been expended or the grant period has expired. Quarterly reports are due 45 days after the end of each calendar year quarter. Grantees must use ETA's On-Line Electronic Reporting System.

Quarterly Progress Reports. The grantee must submit a quarterly progress report to the designated Federal Project Officer within 45 days after the end of each quarter. Two copies are to be submitted providing a detailed account of activities undertaken during that quarter. DOL may require additional data elements to be collected and reported on either a regular basis or special request basis. Grantees must agree to meet all DOL reporting requirements. The quarterly progress report should be in narrative form and should include:

1. General grant information, including a summary of grant activities and a status and update on leveraged resources and strategic partner activities.

2. A grant timeline that includes the progress of grant activities, the key deliverables for each quarter, and the products available each quarter.

3. Grant outcomes, including information on all capacity building, training, employer, and grant deliverable outcomes as well as the anticipated impact of these outcomes on the education, industry, workforce system or broader community/region; and dissemination activities and events for grant deliverables. Training outcomes will include quarterly and cumulative reports on the projected outcomes that include, but are not limited to: enrollment, number completed training, number of certificates awarded, ETA's Common Measures (which are entered employment, employment retention, and average earnings increase), number entered into employment related to training; and number receiving wage gains and promotions.

4. Highlights of promising approaches and success stories.

5. Description of technical assistance needs.

Final Report. A draft final report must be submitted no later than 60 days prior to the expiration date of the grant. This report must summarize project activities, employment outcomes, and related results of the training project, and should thoroughly document the solution approach. After responding to DOL questions and comments on the draft report, three copies of the final report must be submitted no later than the grant expiration date. Grantees must agree to use a designated format specified by DOL for preparing the final report.

VII. Agency Contacts

For further information regarding this SGA, please contact Ariam Ferro, Grants Management Specialist, Division of Federal Assistance, at (202) 693–3968 (This is not a toll-free number). Applicants should fax all technical questions to (202) 693–2705 and must specifically address the fax to the attention of Ariam Ferro and should include SGA/DFA PY 07–07, a contact name, fax and phone number.

This announcement is being made available on the ETA Web site at *http://www.doleta.gov/sga/sga.cfm* and at *http://www.grants.gov.*

Part VIII. Resources and Other Information

Resources for the Applicant. DOL maintains a number of web-based resources that may be of assistance to applicants. The webpage for the ETA's Business Relations Group (*http://www.doleta.gov/BRG*) is a valuable source of background on the HGJTI. America's Service Locator (*http://www.servicelocator.org*) provides a directory of our nation's One-Stop Career Centers. Applicants are encouraged to review ''Understanding the Department of Labor Solicitation for Grant Applications and How to Write an Effective Proposal'' (*http://www/dol.gov/cfbci/sgabrochure.htm*). For a basic understanding of the grants process and basic responsibilities of receiving Federal grant support, please see ''Guidance for Faith-Based and Community Organizations on Partnering with the Federal Government (*http://www.fbci.gov*).

Other Information

OMB Information Collection No. 1205–0458
Expires September 30, 2009

According to the Paperwork Reduction Act of 1995, no persons are required to respond to a collection of information unless such collection displays a valid OMB control number. Public reporting burden for this collection of information is estimated to average 20 hours per response, including time for reviewing instructions, searching existing data sources, gathering and maintaining the data needed, and completing and reviewing the collection of information. Send comments regarding the burden estimated or any other aspect of this collection of information, including suggestions for reducing this burden, to the U.S. Department of Labor, the OMB Desk Officer for ETA, Office of Management and Budget, Room 10235, Washington, DC 20503. Please do not return the completed application to the Omb. Send it to the sponsoring agency as specified in this solicitation.

This information is being collected for the purpose of awarding a grant. The information collected through this SGA will be used by DOL to ensure that grants are awarded to the applicant best suited to perform the functions of the grant. Submission of this information is required in order for the applicant to be considered for award of this grant. Unless otherwise specifically noted in this announcement, information submitted in the respondent's application is not considered to be confidential.

Signed at Washington, DC, this 15th day of January, 2008.

Eric D. Luetkenhaus,

Grant Officer, Employment and Training Administration.

[FR Doc. E8–1061 Filed 1–22–08; 8:45 am]

BILLING CODE 4510–FN–P

DEPARTMENT OF LABOR

Bureau of Labor Statistics

Proposed Collection, Comment Request

ACTION: Notice.

SUMMARY: The Department of Labor, as part of its continuing effort to reduce paperwork and respondent burden, conducts a pre-clearance consultation program to provide the general public and Federal agencies with an opportunity to comment on proposed and/or continuing collections of information in accordance with the Paperwork Reduction Act of 1995 (PRA95) [44 U.S.C. 3506(c) (2)(A)]. This program helps to ensure that requested data can be provided in the desired format, reporting burden (time and financial resources) is minimized, collection instruments are clearly understood, and the impact of collection requirements on respondents can be properly assessed. The Bureau of Labor Statistics (BLS) is soliciting comments concerning the proposed extension without change of a currently approved collection for the ''Producer Price Index'' survey. A copy of the proposed information collection request (ICR) can be obtained by contacting the individual listed below in the Addresses section of this notice.

DATES: Written comments must be submitted to the office listed in the Addresses section of this notice on or before March 24, 2008.

ADDRESSES: Send comments to Amy A. Hobby, BLS Clearance Officer, Division of Management Systems, Bureau of Labor Statistics, Room 4080, 2 Massachusetts Avenue, NE., Washington, DC 20212, 202–691–7628. (This is not a toll free number.)

FOR FURTHER INFORMATION CONTACT: Amy A. Hobby, BLS Clearance Officer, 202–691–7628. (See **ADDRESSES** section.)

SUPPLEMENTARY INFORMATION:

I. Background

The Producer Price Index (PPI), one of the Nation's leading economic indicators, is used as a measure of price movements, as an indicator of inflationary trends, for inventory valuation, and as a measure of purchasing power of the dollar at the primary-market level. It also is used for market and economic research and as a basis for escalation in long-term contracts and purchase agreements.

Producer Price Index data provide a description of the magnitude and composition of price change within the economy, and serve a wide range of governmental needs. This family of indexes are closely followed, monthly statistics which are viewed as sensitive indicators of the economic environment. Price data are vital in helping both the President and Congress set fiscal-spending targets. Producer prices are monitored by the Federal Reserve Board Open Market Committee to help decide monetary policy. Federal policy-makers at the Department of Treasury and the Council of Economic Advisors utilize these statistics to help form and evaluate monetary and fiscal measures and to help interpret the general business environment. In addition, it is common to find one or more PPIs, alone or in combination with other measures, used to escalate the delivered price of goods for government purchases.

In addition to governmental uses, PPI data are regularly put to use by the private sector. Private industry uses PPI data for contract escalation. For one particular method of tax-related Last-In-First-Out (LIFO) inventory accounting, the Internal Revenue Service suggests that firms use PPI data for making calculations. Private businesses make extensive use of industrial price data for planning and operation. Price trends are used to assess the condition of markets. Firms commonly compare the prices they pay for material inputs as well as prices they receive for products that they make and sell with changes in similar PPIs.

Economic researchers and forecasters also put the PPI to regular use. PPIs are widely used to probe and measure the interaction of market forces. Some examples of research topics that require

extensive price data include: The identification of varying price elasticities and the degree of cost pass-through in the economy, the identification of potential lead and lag structures among price changes, and the identification of prices which exert major impacts throughout market structures.

II. Current Action

Office of Management and Budget clearance is being sought for the Producer Price Index survey.

The PPI collection is not a one-time project with an end date. The purpose of the PPI collection is to accumulate data for the ongoing, monthly publication of the PPI family of indexes. The Bureau of Labor Statistics must continue collecting data for the PPI since both policy and business planning are affected by the completeness of the description of price trends. Dollar-denominated measures of economic performance, such as Gross Domestic Product, require accurate price data in order to convert nominal to constant-dollar values. Inflation-free national income accounting figures are vital to fiscal and monetary policy-makers when setting objectives and targets. It is conservatively estimated that hundreds-of-billions of dollars worth of contracts and purchase agreements employ PPIs as part of price-adjustment clauses. Failure to calculate data would tend to extend the time frame required for accurate recognition of and appropriate adaptation to economic events.

III. Desired Focus of Comments

The Bureau of Labor Statistics is particularly interested in comments that:

- Evaluate whether the proposed collection of information is necessary for the proper performance of the functions of the agency, including whether the information will have practical utility.
- Evaluate the accuracy of the agency's estimate of the burden of the proposed collection of information, including the validity of the methodology and assumptions used.
- Enhance the quality, utility, and clarity of the information to be collected.
- Minimize the burden of the collection of information on those who are to respond, including through the use of appropriate automated, electronic, mechanical, or other technological collection techniques or other forms of information technology, *e.g.*, permitting electronic submissions of responses.

Type of Review: Extension without change of a currently approved collection.

Agency: Bureau of Labor Statistics.

Title: Producer Price Index Survey

OMB Number: 1220–0008.

Affected Public: Private Sector.

Form	Total respondents	Frequency	Total responses	Average time per response (min)	Estimated total burden (hours)
BLS 1810A, A1, B, C, C1, and E	6,294	once	6,294	120	12,588
BLS 473P	26,250	monthly	1,260,000	18	378,000
Totals	32,544		1,266,294		390,588

Total Burden Cost (capital/startup): $0.

Total Burden Cost (operating/maintenance): $0.

Comments submitted in response to this notice will be summarized and/or included in the request for Office of Management and Budget approval of the information collection request; they also will become a matter of public record.

Signed at Washington, DC, this 16th day of January 2008.

Cathy Kazanowski,

Chief, Division of Management Systems, Bureau of Labor Statistics.

[FR Doc. E8–1063 Filed 1–22–08; 8:45 am]

BILLING CODE 4510–24–P

NATIONAL AERONAUTICS AND SPACE ADMINISTRATION

[Notice 08–008]

NASA Advisory Council; Meeting

AGENCY: National Aeronautics and Space Administration.

ACTION: Notice of meeting.

SUMMARY: In accordance with the Federal Advisory Committee Act, Public Law 92–463, as amended, the National Aeronautics and Space Administration announces a meeting of the NASA Advisory Council. The agenda for the meeting includes updates from each of the Council committees, including discussion and deliberation of potential recommendations. The Council Committees address NASA interests in the following areas: Aeronautics, Audit and Finance, Space Exploration, Human Capital, Science, and Space Operations.

DATES: Thursday, February 7, 2008, 9:15 a.m.–5 p.m.

ADDRESSES: National Aeronautics and Space Administration, 300 E Street, SW., Rooms 3P44/3P50, James E. Webb Memorial Auditorium (overflow room), NASA Headquarters, Washington, DC 20546.

FOR FURTHER INFORMATION CONTACT: Mr. Paul A. Iademarco, Designated Federal Official, National Aeronautics and Space Administration, Washington, DC 20546, 202/358–1318.

SUPPLEMENTARY INFORMATION: The meeting will be open to the public up to the seating capacity of the rooms with additional seating capacity in the James E. Webb Auditorium. It is imperative that the meeting be held on this date to accommodate the scheduling priorities of the key participants. Attendees will be required to sign a register and to comply with NASA security requirements, including the presentation of a valid picture ID, before receiving an access badge. All attendees will need to provide the following information to receive an access badge: Full name; gender; date/place of birth; citizenship; employer/affiliation information (name of institution, address, county, phone) and title/position. Foreign Nationals will need to provide the following additional information; visa/green card information (number, type, expiration date). To expedite admittance, attendees can provide their identifying information in advance by contacting Ms. Marla K. King via e-mail at *marla.k.king@nasa.gov* or by telephone at (202) 358–1148. Persons with disabilities who require assistance should indicate this.

Dated:January 15, 2008.

P. Diane Rausch,

Advisory Committee Management Officer, National Aeronautics and Space Administration

[FR Doc. E8–1070 Filed 1–22–08; 8:45 am]

BILLING CODE 7510–13–P

NATIONAL AERONAUTICS AND SPACE ADMINISTRATION

[Notice (08–007)]

NASA Advisory Committee; Renewal of NASA's International Space Station Advisory Committee Charter

AGENCY: National Aeronautics and Space Administration (NASA).

ACTION: Notice of renewal and amendment of the Charter of the International Space Station Advisory Committee.

SUMMARY: Pursuant to sections 14(b)(1) and 9(c) of the Federal Advisory Committee Act (Pub. L. 92–463), and after consultation with the Committee Management Secretariat, General Services Administration, the Administrator of the National Aeronautics and Space Administration has determined that a renewal of the International Space Station Advisory Committee is in the public interest in connection with the performance of duties imposed on NASA by law. The renewed Charter is identical to the original Charter in all respects except that the Charter renewal is for nine months, rather than two years, and the minimum number of voting committee members has been reduced from ten to eight.

FOR FURTHER INFORMATION CONTACT: Dr. Glen R. Asner, Office of External Relations, National Aeronautics and Space Administration, Washington, DC 20546, (202) 358–0903.

P. Diane Rausch,

Advisory Committee Management Officer, National Aeronautics and Space Administration.

[FR Doc. E8–1067 Filed 1–22–08; 8:45 am]

BILLING CODE 7510–13–P

NATIONAL AERONAUTICS AND SPACE ADMINISTRATION

[Notice 08–006]

National Environmental Policy Act; Constellation Program

AGENCY: National Aeronautics and Space Administration (NASA)

ACTION: Notice of availability of the Final Constellation Programmatic Environmental Impact Statement (PEIS)

SUMMARY: Pursuant to the National Environmental Policy Act of 1969, as amended (NEPA) (42 U.S.C. 4321 *et. seq.*), the Council on Environmental Quality Regulations for Implementing the Procedural Provisions of NEPA (40 CFR Parts 1500–1508), NASA's NEPA policy and procedures (14 CFR Part 1216, subpart 1216.3), and Executive Order 12114, NASA has prepared and issued the Final PEIS for the proposed Constellation Program to assist in the NASA decision making process.

The Proposed Action (Preferred Alternative) is to continue preparations for and to implement the Constellation Program. The focus of the Constellation Program is the development of the flight systems and Earth-based ground infrastructure required to enable the United States to have continued access to space and to enable future human missions to the International Space Station, the Moon, Mars, and beyond. The Constellation Program also would be responsible for developing and testing flight hardware, and performing mission operations once the infrastructure is sufficiently developed. The only alternative to the Proposed Action discussed in detail is the No Action Alternative where NASA would not continue preparations for nor implement the Constellation Program and therefore, would forego the opportunity for human exploration of space using U.S. space vehicles.

DATES: NASA will issue a Record of Decision (ROD) for the proposed Constellation Program based on the Final PEIS no sooner than February 18, 2008, or 30 days from the date of publication in the **Federal Register** of the U.S. Environmental Protection Agency's notice of availability of the Final PEIS, whichever is later.

ADDRESSES: The Final PEIS may be examined at the following locations:

(a) NASA Headquarters, Library, Room 1J20, 300 E Street, SW., Washington, DC 20546–0001 (202–358–0168)

(b) NASA, Ames Research Center, Moffett Field, CA 94035 (650–604–3273)

(c) NASA, Dryden Flight Research Center, Edwards, CA 93523 (661–276–2704)

(d) NASA, George C. Marshall Space Flight Center, Huntsville, AL 35812 (256–544–1837)

(e) NASA, Goddard Space Flight Center, Greenbelt, MD 20771 (301–286–4721)

(f) NASA, John C. Stennis Space Center, MS 39529 (228–688–2118)

(g) NASA, John F. Kennedy Space Center, FL 32899 (321–867–2745)

(h) NASA, John H. Glenn Research Center at Lewis Field, Cleveland, OH 44135 (866–404–3642)

(i) NASA, Lyndon B. Johnson Space Center, Houston, TX 77058 (281–483–8612)

(j) NASA, Langley Research Center, Hampton, VA 23681 (757–864–2497)

(k) Jet Propulsion Laboratory, Pasadena, CA 91109 (818–393–6779).

Limited hard copies of the Final PEIS are available, on a first request basis, by contacting Kathleen Callister, NASA HQ, Environmental Management Division, 300E Street, SW., Washington, DC 20546, telephone 1–202–358–1953, or electronic mail at *Kathleen.E.Callister@nasa.gov*. The Final PEIS also is available on the internet in Adobe® portable document format at *http://www.nasa.gov/mission_pages/constellation/main/peis.html*. NASA's ROD will be made available, once issued, on the same Web site as above and by request to the contact information provided above.

FOR FURTHER INFORMATION CONTACT: ZA/ Environmental Manager, Constellation Program, NASA Lyndon B. Johnson Space Center, 2101 NASA Parkway, Houston, Texas 77058, telephone (toll free) 1–866–662–7243, or electronic mail at *nasa-cxeis@mail.nasa.gov*. Additional Constellation Program information can also be found on the internet at *http://www.nasa.gov/mission_pages/constellation/main/index.html*. Information specific to the Constellation Program NEPA process can be found at *http://www.nasa.gov/mission_pages/exploration/main/eis.html*.

SUPPLEMENTARY INFORMATION: The Final PEIS addresses the environmental impacts associated with continuing preparations for and implementing the Constellation Program. The Constellation Program would build a new crew vehicle called the Orion and two new launch vehicles, Ares I to transport crew and Ares V to transport cargo (for lunar or Mars missions). The environmental impacts of principal concern are those that would result from fabrication, testing, and launch of the Orion spacecraft and the Ares I and Ares V launch vehicles.

The Constellation Program would be an extremely large and complex program spanning decades and requiring the efforts of a broad spectrum of talent located throughout NASA and many commercial entities. Under NASA's Proposed Action, Constellation Program activities would be expected to occur at the following NASA sites:

—John F. Kennedy Space Center, Brevard County, Florida
—John C. Stennis Space Center, Hancock County, Mississippi
—Michoud Assembly Facility, New Orleans, Louisiana
—Lyndon B. Johnson Space Center, Houston, Texas
—George C. Marshall Space Flight Center, Huntsville, Alabama

—John H. Glenn Research Center, Cleveland, Ohio
—Ames Research Center, Moffett Field, California
—Langley Research Center, Hampton, Virginia
—Johnson Space Center White Sands Test Facility (and the U.S. Army's White Sands Missile Range), Las Cruces, New Mexico
—Dryden Flight Research Center, Edwards Air Force Base, California
—Goddard Space Flight Center, Greenbelt, Maryland
—Jet Propulsion Laboratory, Pasadena, California.

Activities associated with the Constellation Program also would occur at two Alliant Techsystems–Launch Systems Group locations in Promontory and Clearfield, Utah and at various other commercial facilities throughout the United States.

Organizationally, the Constellation Program would consist of a single Program Office at NASA's Lyndon B. Johnson Space Center which would have overall responsibility for management of the Constellation Program, and multiple Project Offices including Project Orion, Project Ares, the Ground Operations Project, the Mission Operations Project, the Lunar Lander Project, and the Extravehicular Activities Systems Project. Each Project Office would focus on specific technology and systems development and operational capabilities for the Constellation Program. As additional mission requirements are developed, additional Project Offices would be established with the responsibility to develop the systems to meet such requirements (*e.g.*, Lunar Surface Systems and Mars Surface Systems). Collectively, these Project Offices would develop the mission systems (*i.e.*, crew vehicles, launch vehicles, and mission hardware) and the infrastructure needed to support crewed missions to the International Space Station and human exploration of the Moon, Mars, and beyond.

NASA published a Notice of Availability (NOA) of the *Draft Constellation Programmatic Environmental Impact Statement* on August 17, 2007 (72 FR 46218). NASA mailed over 300 hard copies and/or compact disks (CDs) of the Draft PEIS to potentially interested Federal, State, and local agencies; organizations; and individuals. In addition, the Draft PEIS was made publicly available in electronic format on NASA's Web site. NASA also sent electronic mail (e-mail) notifications to potentially interested individuals who had submitted scoping comments via e-mail but who had not provided a mailing address.

The public review and comment period for the Draft PEIS closed on September 30, 2007. NASA received a total of 21 submissions (letters and e-mails) from Federal, State, and local agencies; organizations; and individuals, of which, 14 submissions contained comments regarding the Constellation Program. Seven submissions only requested to be added to the mailing list to receive a copy of the Final PEIS. The comments are addressed in the Final PEIS in Appendix B. No alternatives to the Proposed Action were raised during the public review of the Draft PEIS.

Jeffrey A. Parker,

Deputy Assistant Administrator for Infrastructure and Administration.

[FR Doc. E8–1066 Filed 1–22–08; 8:45 am]

BILLING CODE 7510–13–P

NATIONAL AERONAUTICS AND SPACE ADMINISTRATION

[Notice 08–005]

Notice of Intent To Grant an Exclusive License

AGENCY: National Aeronautics and Space Administration.

ACTION: Notice of Intent to Grant an Exclusive License.

SUMMARY: This notice is issued in accordance with 35 U.S.C. 209(e) and 37 CFR 404.7(a)(1)(i). NASA hereby gives notice of its intent to grant an exclusive license in the United States to promote the utilization by the public of the inventions described and claimed in the following U.S. Patent Applications by, inter alia, engaging in marketing activities:

''System And Method For Deriving A Process-Based Specification'' Application Serial No. 10/789,028 NASA Case No. GSC 14,389–1; ''Systems, Methods & Apparatus For Implementation Of Formal Specifications Derived From Informal Requirements'' Application Serial No. 11/203,590 NASA Case No. GSC 14,941–1; ''Systems, Methods And Apparatus For Verification Of Knowledge-Based Systems'' Application Serial No. 11/203,586 NASA Case No. GSC 14,942–1; ''System And Method For Managing Autonomous Entities Through Apoptosis'' Application Serial No. 11/251,538 NASA Case No. GSC 14,968–1; ''System And Method Of Self-Properties For An Autonomous And Autonomic Computer Environment'' Application Serial No. 11/426,853 NASA Case No. GSC 15,038–1; ''Systems, Methods And Apparatus For Procedure Development And Verification'' Application Serial No. 11/461,669 NASA Case No. GSC 15,043–1; ''Systems, Methods, and Apparatus for Generation and Verification of Policies in Autonomic Computing Systems'' Application Serial No. 11/532,800 NASA Case No. GSC 15,079–1; ''Systems, Methods, and Apparatus for Pattern Matching in Procedure Development and Verification'' Application Serial No. 11/533,837 NASA Case No. GSC 15,080–1; ''Systems, Methods, and Apparatus for Automat Learning in Generation of Scenario-Based Requirements in System Development'' Application Serial No. 11/536,132 NASA Case No. GSC 15, 148–1; ''Systems, Methods, and Apparatus for Quiesence of Autonomic System'' Application Serial No. 11/533,855 NASA Case No. GSC–15176–1; ''Systems, Methods, and Apparatus for Developing and Maintaining Evolving Systems With Software Product Lines'' Application Serial No. 11/536,378 NASA Case No. GSC 15,177–1; ''Systems, Methods, and Apparatus For Modeling, Specifying and Deploying Policies In Autonomous and Autonomic Systems Using Agent-Oriented Software Engineering'' Application Serial No. 11/536,969 NASA Case No. GSC–15178–1;''Systems, Methods And Apparatus For Autonomic Safety Devices'' Application Serial No. 11/533,895 NASA Case No. GSC–15179–1;''Systems, Methods, and Apparatus For Flash Drive'' Application Serial No. 11/536,895 NASA Case No. GSC–15186–1; ''Otoacoustic Protection In Biologically-Inspired Systems'' Application Serial No. 11/836,352 NASA Case No. GSC–15206–1; ''Flash Drive Memory Apparatus And Method'' Application Serial No. 11/935,572 NASA Case No. GSC–15301–1; ''A Double-Heated USB Drive'' Application Serial No. 11/935,572 NASA Case No. GSC 15,302–1; ''Information Capturing Method'' Application Serial No. 11/937,777 NASA Case No. GSC–15303–1; ''Digital Memory Storage Hub'' Application Serial No. 11/935,821 NASA Case No. GSC–15304–1; ''Driven Shielding Capacitive Proximity Sensor'' Application Serial No. 07/710,845 NASA Case No. GSC 13,377–1; ''Driven Shielding Capacitive Proximity Sensor'' Application Serial No. 08/999,976 NASA Case No. GSC 13,377–2; ''Phase Discriminating Capacitive Array Sensor System'' Application Serial No. 07/889,577 NASA Case No. GSC 13,460–1; ''Double-Driven Shield Capacitive Type Proximity Sensor'' Application Serial

No. 08/008,426 NASA Case No. GSC 13,541–1; ''Capaciflector Camera'' Application Serial No. 08/090,230 NASA Case No. GSC 13,564–1; ''Capaciflector-Guided Mechanisms'' Application Serial No. 08/346,593 GSC–13614–1; ''3-D Capaciflector'' Application Serial No. 08/613,802 GSC–13701–1; ''3-D Interactive Display'' Application Serial No. 09/804,645 GSC–14339–1; ''Virtual Feel Capaciflectors'' Application Serial No. 11/250,701 GSC–14955–1; ''Systems And Method For Delivery Of Information'' Application Serial No. 11/561,337 GSC 14,927–1; ''Empirical Mode Decomposition Method And Hilbert Spectral Analysis Algorithms'' Application Serial No. 08/872,586 GSC 13,817–1; ''Computer Implemented Empirical Mode Decomposition Method Apparatus and Article of Manufacture Utilizing Curvature Extrema'' Application Serial No. 09/082,523 GSC 13,817–2; ''Empirical Mode Decomposition Apparatus, Method, And Article Of Manufacture For Analyzing Biological Signals And Performing Curve Fitting'' Application Serial No. 09/282,424 GSC 13,817–3; '' Empirical Mode Decomposition For Analyzing Acoustical Signals'' Application Serial No. 10/073,957 GSC 13,817–4; ''Empirical Mode Decomposition Apparatus, Method And Article Of Manufacture For Analyzing Biological Signals And Performing Curve Fitting'' Application Serial No. 10/011,206 GSC 13,817–5; ''Computer Implemented Empirical Mode Decomposition Method, Apparatus, And Article Of Manufacture For Two-Dimensional Signals'' Application Serial No. 09/150,671 GSC 13,909–1; ''Three Dimensional Empirical Mode Decomposition Analysis Apparatus And Method'' Application Serial No. 09/729,138 GSC 14,302–1; ''Computing Frequency By Using Generalized Zero-Crossing Applied To Intrinsic Mode Functions'' Application Serial No. 10/729,579 GSC 14,608–1; ''Computing Instantaneous Frequency By Normalizing Hilbert Transform'' Application Serial No. 10/615,365 GSC 14,673–1; ''Analyzing Nonstationary Financial Time Series Via Hilbert-Huang Transform (HHT)'' Application Serial No. 10/963,470 GSC 14,807–1; ''Systems And Method Of Analyzing Vibrations And Identifying Failure Signatures In The Vibrations'' Application Serial No. 11/251,004 GSC 14,833–1; ''GPS Compound Eye Attitude And Navigation Sensor And Method'' Application Serial No. 09/574,986 GSC 13,966–1; ''Spaceborne Global Positioning System For Spacecraft'' Application Serial No. 09/348,876 GSC 13,991–1; Global Positioning System Satellite Selection Method'' Application Serial No. 09/348,875 GSC 13,991–2; ''Using The Global Positioning Satellite System To Determine Attitude Rates Using Doppler Effects'' Application Serial No. 09/928,700 GSC 14,087–1; ''Minimum Cycle Slip Airborne Differential Carrier Phase GPS Antenna'' Application Serial No. 10/615,364 GSC 14,436–1; ''Autonomous Navigation System Based On GPS And Magnetometer Data'' Application Serial No. 10/178,546 GSC 14,463–1; ''Radiation Hardened Fast Acquisition/Weak Signal Tracking System And Method'' Application Serial No. 11/239,458 GSC 14,793–1 To Ocean Tomo Federal Services having its principal place of business in Bethesda, MD.

The patent rights in this invention have been assigned to the United States of America as represented by the Administrator of the National Aeronautics and Space Administration. The exclusive license will comply with the terms and conditions of 35 U.S.C. 209 and 37 CFR 404.7.

DATES: The prospective exclusive license may be granted unless, within fifteen (15) days from the date of this published notice, NASA receives written objections including evidence and argument that establish that the grant of the license would not be consistent with the requirements of 35 U.S.C. 209 and 37 CFR 404.7. Competing applications completed and received by NASA within fifteen (15) days of the date of this published notice will also be treated as objections to the grant of the contemplated exclusive license.

Objections submitted in response to this notice will not be made available to the public for inspection and, to the extent permitted by law, will not be released under the Freedom of Information Act, 5 U.S.C. 552.

ADDRESSES: Objections relating to the prospective license may be submitted to Mr. Bryan A. Geurts, Chief Patent Counsel/140.1, Goddard Space Flight Center, Greenbelt, MD 20771, (301) 286–7351.

FOR FURTHER INFORMATION CONTACT: Darryl Mitchell, Technology Transfer Program Office/504, Goddard Space Flight Center, Greenbelt, MD 20771 (301) 286–5810. Information about other NASA inventions available for licensing can be found online at *http://techtracs.nasa.gov/.*

Dated: January 11, 2008.

Keith T. Sefton,

Deputy General Counsel, Administration and Management.

[FR Doc. E8–1064 Filed 1–22–08; 8:45 am]

BILLING CODE 7510–13–P

NATIONAL CREDIT UNION ADMINISTRATION

Meeting; Sunshine Act

TIME AND DATE: 10 a.m., Thursday, January 24, 2008.

PLACE: Board Room, 7th Floor, Room 7047, 1775 Duke Street, Alexandria, VA 22314–3428.

STATUS: Open.

MATTERS TO BE CONSIDERED: 1. Advance Notice of Proposed Rulemaking: Parts 708a and 708b of NCUA's Rules and Regulations—Mergers, Conversion from Credit Union Charter, and Account Insurance Termination.

2. Interest Rate Ceiling Determination under Section 107(5) of the Federal Credit Union Act.

RECESS: 11 a.m.

TIME AND DATE: 11:15 a.m., Thursday, January 24, 2008.

PLACE: Board Room, 7th Floor, Room 7047, 1775 Duke Street, Alexandria, VA 22314–3428.

STATUS: Closed.

MATTERS TO BE CONSIDERED:

1. One (1) Administrative Action under Sections 205, 207, and 208 of the Federal Credit Union Act. Closed pursuant to Exemptions (8), (9)(A)(ii), and (9)(B).

2. One (1) Administrative Action under Section 206 of the Federal Credit Union Act. Closed pursuant to Exemptions (6), (7), and (9)(B).

FOR FURTHER INFORMATION CONTACT: Mary Rupp, Secretary of the Board, Telephone: 703–518–6304.

Mary Rupp,

Secretary of the Board.

[FR Doc. 08–235 Filed 1–18–08; 10:48 am]

BILLING CODE 7535–01–M

NUCLEAR REGULATORY COMMISSION

[Docket Nos. 50–361, 50–362, 50–206, 72–041; License Nos. NPF–10, NPF–15, DPR–13, General License Pursuant to 10 CFR 72.210 EA–07–232]

In the Matter of Southern California Edison Company, San Onofre Nuclear Generating Station; Confirmatory Order (Effective Immediately)

Southern California Edison Company (SCE or Licensee) is the holder of reactor operating licenses, License Nos. NPF–10 and NPF–15, issued by the Nuclear Regulatory Commission (NRC or Commission), pursuant to 10 CFR Part 50, on September 07, 1982, and September 16, 1983, respectively. The licenses authorize the operation of San Onofre Nuclear Generating Station (SONGS) Units 2 and 3, respectively, in accordance with conditions specified therein. In addition, SCE is the holder of License No. DPR–13, which authorizes decommissioning of its Unit 1 facility; and SCE is the holder of a General License Pursuant to 10 CFR 72.210, which authorizes the storage of spent fuel in an independent spent fuel storage installation. These facilities are located on the Licensee's site in San Clemente, CA. This Confirmatory Order is the result of an agreement reached during an alternative dispute resolution (ADR) mediation session conducted on December 3, 2007.

II

On January 9, 2007, the NRC Office of Investigations (OI) began an investigation (OI No. 4–2007–016) at SONGS. As a result of the staff's review of the information, the NRC was concerned that a qualified contract fire protection specialist appeared to have engaged in deliberate misconduct. Specifically, on multiple occasions from April 2001 to December 2006, the fire protection specialist appeared to provide inaccurate information on firewatch records to indicate that hourly firewatch rounds had been completed when they had not been completed.

The NRC's preliminary findings were discussed in a letter to SCE dated September 27, 2007. That letter identified an apparent violation of 10 CFR 50.9 that was being considered for escalated enforcement action, and identified the NRC's concern that the fire protection specialist's actions may have involved willfulness in the form of deliberate misconduct. The NRC's assessment concluded that the missed firewatch rounds, absent willfulness, have very low safety significance based on a bounding risk analysis, as discussed in our September 27, 2007, letter. However, the NRC was considering escalated enforcement in this case because the apparent violation involved willfulness and because of the lack of management oversight over firewatches during the midnight shifts for a period of approximately 5½ years.

Both SONGS and the NRC noted that the NRC has substantiated several instances of willful violations at SONGS in the past year.

(1) On November 1, 2006, one SL IV NCV (licensee-identified) was issued to SONGS involving a radiographer who deliberately failed to follow a Radiation Work Permit (EA–06–084).

(2) On March 15, 2007, two SL IV cited violations were issued involving security-related information that is not publicly available (EA–06–303).

(3) On June 29, 2007, one SL IV cited violation was issued involving security-related information that is not publicly available (EA–07–147).

(4) On November 7, 2007, one SL IV cited violation was issued involving an I&C technician who willfully failed to control the work activities of an unqualified I&C technician when performing work on safety-related equipment, resulting in inoperability (EA–07–141).

In addition, OI is investigating other instances of willful violations. In an attempt to resolve the issue you requested ADR with the NRC. ADR is a general term encompassing various techniques for resolving conflict outside of court using a neutral third party. The technique that the NRC has decided to employ is mediation. In requesting ADR, SCE noted the high number of substantiated willful violations that have been identified at SONGS during such a short time period, and SCE expressed its concern that SONGS might have an issue related to its safety culture.

On December 3, 2007, the NRC and SCE met in an ADR session mediated by a professional mediator, arranged through Cornell University's Institute on Conflict Resolution. At the conclusion of the ADR session, SCE and the NRC reached an Agreement in Principle. This Confirmatory Order is issued pursuant to the agreement reached during the ADR process.

III

During the December 3, 2007, ADR session, a preliminary settlement agreement was reached. Pursuant to the ADR agreement, the following are the terms and conditions agreed upon in principle by SCE and the NRC relating to the issues described in the NRC's letter to SCE dated September 27, 2007.

Whereas, the NRC and SCE agree that a contract firewatch person deliberately failed to perform firewatch rounds and falsified associated documentation as described in EA–07–232 dated September 27, 2007.

Whereas, the NRC and SCE agree that an I&C on-the-job trainer willfully did not adequately control the actions of a trainee as described in EA–07–141 dated November 7, 2007.

Whereas, the NRC and SCE agree that several apparent willful violations have occurred from 2005 to present that may involve safety culture issues.

The following are the specific actions that were agreed upon.

1. By January 31, 2008, SCE will perform a common cause evaluation of known recent events, actually or potentially involving willful events to determine the root and contributing causes for the collective issues. This evaluation will include an analysis to determine if any deficiencies of safety culture components were significant contributors. The results of this evaluation will be factored into the Corrective Action Program and addressed in other ongoing related efforts, as appropriate.

2. By February 29, 2008, SCE will provide the NRC with a Corrective Action Plan that includes the results of Item 1 and provides the following key elements:

a. A monitoring program to determine the effectiveness of the Corrective Action Plan developed pursuant to this Item 2.

b. By June 30, 2008, SCE will conduct multi-day interventions that reinforce fundamental company values. SONGS will ensure that this effort includes the elements of a strong nuclear safety culture to prevent deliberate misconduct-related violation issues. The intent of the interventions will be to focus leaders and managers on the importance of balancing accountability and encouraging workers to self-report errors and the importance of communicating this to their workers.

c. SCE will expand the Corporate Ethics Program to encompass long-term (i.e., greater than 90 days) managers and supervisors of independent contract workers at SONGS, who will be required to take the integrity training in 2008. SCE will conduct training for SONGS managers and supervisors in 2008 and other SCE SONGS employees in 2009.

d. SCE will conduct a safety culture assessment by an independent outside organization by April 1, 2008, that will provide trends of key cultural performance indicators related at a minimum, to: (a) Nuclear Safety Culture

and Performance, (b) Safety Conscious Work Environment (c) General Culture and Work Environment. By June 30, 2008, the results of this assessment will be factored into the Corrective Action Program and addressed in other ongoing related efforts, as appropriate.

e. By April 1, 2008, SCE will further enhance the new employee orientation and the general employee training programs to better ensure that new and periodically retrained personnel clearly understand that deliberate acts of non-compliance with regulations or procedures will not be tolerated and could result in a significant disciplinary action up to and including termination.

f. By September 30, 2008, SCE will develop and begin conducting training (for managers and supervisors) on techniques that can be used to monitor that workers are implementing procedures as instructed.

g. By April 1, 2008, SCE will enhance its existing disciplinary process to provide more detailed guidance in cases involving a deliberate misconduct-related violation. This process will communicate to the workforce specific escalating disciplinary actions that may be taken in response to initial and/or repeat deliberate misconduct by individual contributors and supervisors/managers. Communication of process enhancements will focus personnel on the importance of balancing accountability and encouraging workers to self-report errors and the importance of communicating this with their workers.

h. By April 1, 2008, SCE will revise the SONGS training lesson for On-the-Job Training (OJT) trainers and provide this training to all OJT trainers and trainees. The revised OJT training will reinforce the responsibilities of the trainer and the trainees. Emphasis will be placed on the expectations of a trainer while his/her trainee is performing work during an OJT session.

i. SCE will take steps to incentivize on-site service contractors to help SCE address the issues that have resulted in deliberate misconduct-related violations. If SCE is unable to negotiate acceptable programs by a particular contractor, then SCE will impose additional oversight to ensure the performance of the contractor and its personnel meets specified criteria.

j. By April 1, 2008, SCE will incorporate into the SONGS oversight surveillance program, periodic sampling of repetitive rounds and log-keeping activities to provide reasonable assurance that actions to deter and detect instances of deliberate non-compliance are effective. This oversight will include sampling of SCE and contractor activities.

k. SCE will use multiple site-wide communication tools (e.g., ''All Hands'' meetings, monthly ''Manager and Supervisor Forum'' meetings, and written communications) to emphasize to employees and contractors at SONGS the need to comply with job rules, regulations, and procedures and potential consequences when compliance does not occur.

l. Upon completion of the terms of the Confirmatory Action Order, SCE will provide the NRC with a letter discussing its basis for concluding that the Order has been satisfied.

For the period of 6 months following issuance of this Order, the NRC will grant enforcement discretion if it concludes that the provisions of Section VII.B.4 of the Enforcement Policy have been met. Similar violations identified after this 6-month period may be actionable under the NRC Enforcement Policy.

Based on the above actions, the NRC agrees to refrain from issuing a civil penalty or a Notice of Violation for EA 07–232. The resulting Confirmatory Order will, however, be considered by the NRC for any assessment of SONGS plant performance under the NRC's Reactor Oversight Process, as appropriate.

By 30 days after issuance of the Order, SCE will provide to the NRC under separate letter its response to the three issues addressed by the NRC in its letter dated September 27, 2007, (EA 07–232) and for NRC letter dated November 7, 2007, (EA 07–141), the extent to which trainers may fail to follow the procedural requirements of Section 6.3.2 of SONGS Training Procedure SO123–XV–27.

On January 8, 2008, SCE consented to issuing this Order with the commitments, as described in Section V below. SCE further agreed that this Order is to be effective upon issuance and that it has waived its right to a hearing.

IV

Since SCE has agreed to take additional actions to address NRC concerns, as set forth in Section III above, the NRC has concluded that its concerns can be resolved through issuance of this Order.

I find that the Licensee's commitments as set forth in Section V are acceptable and necessary and conclude that with these commitments the public health and safety are reasonably assured. In view of the foregoing, I have determined that public health and safety require that the Licensee's commitments be confirmed by this Order. Based on the above and the Licensee's consent, this Order is immediately effective upon issuance.

V

Accordingly, pursuant to Sections 104, 161b, 161i, 161o, 182, and 186 of the Atomic Energy Act of 1954, as amended, the Commission's regulations in 10 CFR 2.202, and 10 CFR Parts 50 and 72, *it is hereby ordered,* effective immediately, that license NOs. NPF–10, NPF–15, and DPR–13, and SCE's General License Pursuant to 10 CFR 72.210, are modified as follows:

1. By January 31, 2008, SCE will perform a common cause evaluation of known recent events, actually or potentially involving willful events to determine the root and contributing causes for the collective issues. This evaluation will include an analysis to determine if any deficiencies of safety culture components, as defined by NRC's Inspection Manual Chapter (IMC) 0305, ''Operating Reactor Assessment Program,'' were significant contributors. The results of this evaluation will be factored into the Corrective Action Program and addressed in other ongoing related efforts, as appropriate.

2. By February 29, 2008, SCE will provide the NRC with a Corrective Action Plan that includes the results of Item 1 and provides the following key elements:

a. A monitoring program to determine the effectiveness of the Corrective Action Plan developed pursuant to this Item 2.

b. By June 30, 2008, SCE will conduct multi-day interventions that reinforce fundamental company values. SONGS will ensure that this effort includes the elements of a strong nuclear safety culture to prevent deliberate violations. The intent of the interventions will be to focus leaders and managers on the importance of balancing accountability and encouraging workers to self-report errors and the importance of communicating this to their workers.

c. SCE will expand the Corporate Ethics Program to encompass long-term (i.e., greater than 90 days) managers and supervisors of independent contract workers at SONGS, who will be required to take the integrity training in 2008. SCE will conduct training for SONGS managers and supervisors in 2008 and other SCE SONGS employees in 2009.

d. SCE will conduct a safety culture assessment by an independent third-party organization by April 1, 2008. By June 30, 2008, the results of this assessment will be factored into the Corrective Action Program and

addressed in other ongoing related efforts, as appropriate.

e. By April 1, 2008, SCE will further enhance the new employee orientation and the general employee training programs to better ensure that new and periodically retrained personnel clearly understand that deliberate acts of non-compliance with regulations or procedures will not be tolerated and could result in a significant disciplinary action up to and including termination.

f. By September 30, 2008, SCE will develop and begin conducting training (for managers and supervisors) on techniques that can be used to monitor that workers are implementing procedures as instructed.

g. By April 1, 2008, SCE will enhance its existing disciplinary process to provide more detailed guidance in cases involving a deliberate misconduct-related violation. This process will communicate to the workforce specific escalating disciplinary actions that may be taken in response to initial and/or repeat deliberate misconduct by individual contributors and supervisors/managers. Communication of process enhancements will focus personnel on the importance of balancing accountability and encouraging workers to self-report errors and the importance of communicating this with their workers.

h. By April 1, 2008, SCE will revise the SONGS training lesson for OJT trainers and provide this training to all OJT trainers and trainees. The revised OJT training will reinforce the responsibilities of the trainer and the trainees. Emphasis will be placed on the expectations of a trainer while his/her trainee is performing work during an OJT session.

i. SCE will take steps to develop and implement incentives for on-site service contractors to help SCE address the issues that have resulted in deliberate misconduct-related violations. If SCE is unable to negotiate acceptable programs by a particular contractor, then SCE will impose additional oversight to ensure the performance of the contractor and its personnel meets specified criteria.

j. By April 1, 2008, SCE will incorporate into the SONGS oversight surveillance program, periodic sampling of repetitive rounds and log keeping activities to provide reasonable assurance that actions to deter and detect instances of deliberate non-compliance are effective. This oversight will include sampling of SCE and contractor activities.

k. SCE will use multiple site-wide communication tools to emphasize to employees and contractors at SONGS the need to comply with job rules, regulations, and procedures and potential consequences when compliance does not occur.

l. Upon completion of the terms of the Confirmatory Action Order, SCE will provide the NRC with a letter discussing its basis for concluding that the Order has been satisfied.

3. By 30 days after issuance of the order, SCE will provide to the NRC under separate letter its response to the three issues addressed by the NRC in its letter dated September 27, 2007 (EA 07–232) and for NRC letter dated November 7, 2007 (EA 07–141), the extent to which trainers may fail to follow the procedural requirements of Section 6.3.2 of SONGS Training Procedure SO123–XV–27.

For the period of 6 months following issuance of this Order, the NRC will grant enforcement discretion if it concludes that the provisions of Section VII.B.4 of the Enforcement Policy have been met. Similar violations identified after this 6-month period may be actionable under the NRC Enforcement Policy.

Based on the above actions, the NRC agrees to refrain from issuing a civil penalty or a Notice of Violation for EA 07–232. The resulting Confirmatory Order will, however, be considered by the NRC for any assessment of SONGS plant performance under the NRC's Reactor Oversight Process, as appropriate.

The Regional Administrator, NRC Region IV, may relax or rescind, in writing, any of the above conditions upon a showing by SCE of good cause.

VI

Any person adversely affected by this Confirmatory Order, other than SCE, may request a hearing within 20 days of its issuance. Where good cause is shown, consideration will be given to extending the time to answer or request a hearing. A request for extension of time must be made in writing to the Director, Office of Enforcement, U.S. Nuclear Regulatory Commission, and include a statement of good cause for the extension.

A request for a hearing must be filed in accordance with the NRC E-Filing rule, which the NRC promulgated in August, 2007, 72 FR 49,139 (Aug. 28, 2007). The E-Filing process requires participants to submit and serve documents over the internet or, in some cases, to mail copies on electronic optical storage media. Participants may not submit paper copies of their filings unless they seek a waiver in accordance with the procedures described below.

To comply with the procedural requirements associated with E-Filing, at least five (5) days prior to the filing deadline the requestor must contact the Office of the Secretary by e-mail at *HEARINGDOCKET@NRC.GOV,* or by calling (301) 415–1677, to request (1) a digital ID certificate, which allows the participant (or its counsel or representative) to digitally sign documents and access the E-Submittal server for any NRC proceeding in which it is participating; and/or (2) creation of an electronic docket for the proceeding (even in instances when the requestor (or its counsel or representative) already holds an NRC-issued digital ID certificate). Each requestor will need to download the Workplace Forms Viewer™ to access the Electronic Information Exchange (EIE), a component of the E-Filing system. The Workplace Forms Viewer™ is free and is available at *http://www.nrc.gov/site-help/e-submittals/install-viewer.html.* Information about applying for a digital ID certificate also is available on NRC's public Web site at *http://www.nrc.gov/site-help/e-submittals/apply-certificates.html.*

Once a requestor has obtained a digital ID certificate, had a docket created, and downloaded the EIE viewer, it can then submit a request for a hearing through EIE. Submissions should be in Portable Document Format (PDF) in accordance with NRC guidance available on the NRC public Web site at *http://www.nrc.gov/site-help/e-submittals.html.* A filing is considered complete at the time the filer submits its document through EIE. To be timely, electronic filings must be submitted to the EIE system no later than 11:59 p.m. Eastern Time on the due date. Upon receipt of a transmission, the E-Filing system time-stamps the document and sends the submitter an e-mail notice confirming receipt of the document. The EIE system also distributes an e-mail notice that provides access to the document to the NRC Office of the General Counsel and any others who have advised the Office of the Secretary that they wish to participate in the proceeding, so that the filer need not serve the document on those participants separately. Therefore, any others who wish to participate in the proceeding (or their counsel or representative) must apply for and receive a digital ID certificate before a hearing request is filed so that they may obtain access to the document via the E-Filing system.

A person filing electronically may seek assistance through the ''Contact Us'' link located on the NRC Web site at *http://www.nrc.gov/site-help/e-submittals.html* or by calling the NRC technical help line, which is available

between 8:30 a.m. and 4:15 p.m., Eastern Time, Monday through Friday. The help line number is (800) 397–4209 or locally, (301) 415–4737.

Participants who believe that they have good cause for not submitting documents electronically must file a motion, in accordance with 10 CFR 2.302(g), with their initial paper filing requesting authorization to continue to submit documents in paper format. Such filings must be submitted by (1) first class mail addressed to the Office of the Secretary of the Commission, U.S. Nuclear Regulatory Commission, Washington, DC 20555–0001, Attention: Rulemaking and Adjudications Staff; or (2) courier, express mail, or expedited delivery service to the Office of the Secretary, Sixteenth Floor, One White Flint North, 11555 Rockville, Pike, Rockville, Maryland 20852, Attention: Rulemaking and Adjudications Staff. Participants filing a document in this manner are responsible for serving the document on all other participants. Filing is considered complete by first-class mail as of the time of deposit in the mail, or by courier, express mail, or expedited delivery service upon depositing the document with the provider of the service.

Documents submitted in adjudicatory proceedings will appear in NRC's electronic hearing docket which is available to the public at *http://ehd.nrc.gov/EHD_Proceeding/home.asp*, unless excluded pursuant to an order of the Commission, an Atomic Safety and Licensing Board, or a Presiding Officer. Participants are requested not to include personal privacy information, such as social security numbers, home addresses, or home phone numbers in their filings. With respect to copyrighted works, except for limited excerpts that serve the purpose of the adjudicatory filings and would constitute a Fair Use application, Participants are requested not to include copyrighted materials in their works.

If a person other than SCE requests a hearing, that person shall set forth with particularity the manner in which his interest is adversely affected by this Order and shall address the criteria set forth in 10 CFR 2.309(d).

If a hearing is requested by a person whose interest is adversely affected, the Commission will issue an Order designating the time and place of any hearing. If a hearing is held, the issue to be considered at such hearing shall be whether this Confirmatory Order should be sustained. An answer or a request for hearing shall not stay the immediate effectiveness of this order.

Dated this 11th day of January, 2008.

For the Nuclear Regulatory Commission.

Elmo E. Collins,

Regional Administrator.

[FR Doc. E8–1079 Filed 1–22–08; 8:45 am]

BILLING CODE 7590–01–P

NUCLEAR REGULATORY COMMISSION

[Docket No. 72–26–ISFSI; ASLBP No. 08–860–01–ISFSI–BD01]

Pacific Gas and Electric Co. (Diablo Canyon Power Plant Independent Spent Fuel Storage Installation); Designation of Presiding Officer

Pursuant to delegation by the Commission, *see* 37 FR 28,710 (Dec. 29, 1972), and the Commission's regulations, *see* 10 CFR 2.313(a)(2), 2.318, 2.1300, and 2.1319(a), notice is hereby given that a member of the Atomic Safety and Licensing Board Panel is being designated as Presiding Officer in the following proceeding in compliance with the Commission's directions in its Memorandum and Order dated January 15, 2008 (CLI–08–01): Pacific Gas and Electric Co. (Diablo Canyon Power Plant Independent Spent Fuel Storage Installation).

This proceeding, which will be conducted pursuant to Subpart K of the Commission's pre-2004 Part 2 procedural rules Regulations (CLI–08–01, slip op. at 4), concerns a license application for an independent spent fuel storage installation (''ISFSI'') at the site of the Diablo Canyon nuclear power reactor in California. Pursuant to the Ninth Circuit's order in *San Luis Obispo Mothers for Peace* v. *NRC*, 449 F.3d 1016 (9th Cir. 2006), *cert. denied*, 127 S. Ct. 1124 (2007), the Nuclear Regulatory Commission (''NRC'') has undertaken a NEPA-terrorism review for this licensing proceeding. The NRC Staff prepared a revised environmental assessment (''EA'') addressing the likelihood of a terrorist attack at the Diablo Canyon ISFSI site and the potential consequence of such an attack (CLI–08–01, slip op. at 1). The Commission admitted limited portions of two contentions—Contentions 1(b) and 2—proffered by the San Luis Obispo Mothers for Peace challenging the Staff's EA (*id.*, slip op. at 3, 29). The Commission set a tentative schedule for further consideration of Contention 1(b), for discovery, and for an ultimate Subpart K oral argument-type hearing on Contention 2 (*id.*, slip op. at 30–31). Stating that it remains ''committed to a prompt resolution of this proceeding,'' the Commission directed the designation of a Presiding Officer to ''keep discovery on schedule, if necessary by setting schedules, and by resolving promptly any discovery disputes, including privilege, materiality, and burdensomeness controversies'' (*id.*, slip op. at 30, 31).

The Presiding Officer is: Administrative Judge E. Roy Hawkens, Atomic Safety and Licensing Board Panel, U.S. Nuclear Regulatory Commission, Washington, DC 20555–0001.

All correspondence, documents, and other materials that relate to keeping discovery on schedule shall be filed with the Presiding Officer in accordance with 10 CFR 2.302 (2007).

Issued at Rockville, Maryland, this 16th day of January 2008.

E. Roy Hawkens,

Chief Administrative Judge, Atomic Safety and Licensing Board Panel.

[FR Doc. E8–1074 Filed 1–22–08; 8:45 am]

BILLING CODE 7590–01–P

NUCLEAR REGULATORY COMMISSION

Sunshine Federal Register Notice

DATE: Weeks of January 21, 28, February 4, 11, 18, 25, 2008.

PLACE: Commissioners' Conference Room, 11555 Rockville Pike, Rockville, Maryland.

STATUS: Public and Closed.

MATTERS TO BE CONSIDERED:

Week of January 21, 2008

There are no meetings scheduled for the Week of January 21, 2008.

Week of January 28, 2008—Tentative

There are no meetings scheduled for the Week of January 28, 2008.

Week of February 4, 2008—Tentative

There are no meetings scheduled for the Week of February 4, 2008.

Week of February 11, 2008—Tentative

There are no meetings scheduled for the Week of February 11, 2008.

Week of February 18, 2008—Tentative

Wednesday, February 20, 2008:

9:30 a.m.
Periodic Meeting on New Reactor Issues, Part 1 (Public Meeting) (Contact: Donna Williams, 301–415–1322).

1:30 p.m.
Periodic Meeting on New Reactor Issues, Part 2 (Public Meeting) (Contact: Donna Williams, 301–415–1322).

This meeting, parts 1 and 2, will be webcast live at the Web address—*http://www.nrc.gov.*

Week of February 25, 2008—Tentative

There are no meetings scheduled for the Week of February 25, 2008.

The schedule for Commission meetings is subject to change on short notice. To verify the status of meetings, call (recording)—(301) 415–1292. Contact person for more information: Michelle Schroll, (301) 415–1662.

The NRC Commission Meeting Schedule can be found on the Internet at: *http://www.nrc.gov/about-nrc/policy-making/schedule.html.*

The NRC provides reasonable accommodation to individuals with disabilities where appropriate. If you need a reasonable accommodation to participate in these public meetings, or need this meeting notice or the transcript or other information from the public meetings in another format (e.g., braille, large print), please notify the NRC's Disability Program Coordinator, Rohn Brown, at 301–492–2279, TDD: 301–415–2100, or by e-mail at *REB3@nrc.gov.* Determinations on requests for reasonable accommodation will be made on a case-by-case basis.

This notice is distributed by mail to several hundred subscribers; if you no longer wish to receive it, or would like to be added to the distribution, please contact the Office of the Secretary, Washington, DC 20555 (301–415–1969). In addition, distribution of this meeting notice over the Internet system is available. If you are interested in receiving this Commission meeting schedule electronically, please send an electronic message to *dkw@nrc.gov.*

Dated: January 17, 2008.

R. Michelle Schroll,

Office of the Secretary.

[FR Doc. 08–259 Filed 1–18–08; 11:31 am]

BILLING CODE 7590–01–P

SECURITIES AND EXCHANGE COMMISSION

Submission for OMB Review; Comment Request

Upon Written Request, Copies Available From: Securities and Exchange Commission, Office of Investor Education and Advocacy, Washington, DC 20549–0213.

Extension:

Rule 204–2; SEC File No. 270–215; OMB Control No. 3235–0278.

Notice is hereby given that pursuant to the Paperwork Reduction Act of 1995 (44 U.S.C. 3501 *et seq.*) the Securities and Exchange Commission (''Commission'') has submitted to the Office of Management and Budget (''OMB'') a request for extension of the previously approved collection of information discussed below.

The title for the collection of information is ''Rule 204–2'' (17 CFR 275.204–2) under the Investment Advisers Act of 1940 (15 U.S.C. 80b–1). Rule 204–2 requires SEC-registered investment advisers to maintain copies of certain books and records relating to their advisory business. The collection of information under rule 204–2 is necessary for the Commission staff to use in its examination and oversight program. This collection of information is mandatory. The respondents to the collection of information are investment advisers registered with the Commission. As of August 31, 2007, there were 10,787 SEC registered advisers. Responses provided to the Commission in the context of its examination and oversight program are generally kept confidential. The records that an adviser must keep in accordance with rule 204–2 must generally be retained for not less than five years.

The Commission has estimated that compliance with the requirements of the rule imposes a total burden of approximately 181.1541 hours for an adviser. Based on our experience, the Commission staff estimates a total annual burden of 1,954,109 hours for the collection of this information.

An agency may not conduct or sponsor, and a person is not required to respond to a collection of information unless it displays a currently valid control number.

General comments regarding the above information should be directed to the following persons: (i) Desk Officer for the Securities and Exchange Commission, Office of Information and Regulatory Affairs, Office of Management and Budget, Room 10102, New Executive Office Building, Washington, DC 20503 or e-mail to: *Alexander_T._Hunt@omb.eop.gov* and (ii) R. Corey Booth, Director/Chief Information Officer, Securities and Exchange Commission, C/O Shirley Martinson, 6432 General Green Way, Alexandria, VA 22312, or send an e-mail to: *PRA_Mailbox@sec.gov.* Comments must be submitted to OMB within 30 days of this notice.

Dated: January 14, 2008.

Florence E. Harmon,

Deputy Secretary.

[FR Doc. E8–1056 Filed 1–22–08; 8:45 am]

BILLING CODE 8011–01–P

SECURITIES AND EXCHANGE COMMISSION

Submission for OMB Review; Comment Request

Upon Written Request, Copies Available From: Securities and Exchange Commission, Office of Investor Education and Advocacy, Washington, DC 20549–0213.

Extension:

Rule 237, SEC File No. 270–465, OMB Control No. 3235–0528.

Notice is hereby given that, pursuant to the Paperwork Reduction Act of 1995 (44 U.S.C. 3501–3520), the Securities and Exchange Commission (the ''Commission'') has submitted to the Office of Management and Budget a request for extension and approval of the collection of information discussed below.

In Canada, as in the United States, individuals can invest a portion of their earnings in tax-deferred retirement savings accounts (''Canadian retirement accounts''). In cases where these individuals move to the United States, these participants (''Canadian/U.S. Participants'' or ''participants'') may not be able to manage their Canadian retirement account investments. Most securities and most investment companies (''funds'') that are ''qualified investments'' for Canadian retirement accounts are not registered under the U.S. securities laws. Those securities, therefore, generally cannot be publicly offered and sold in the United States without violating the registration requirements of the Securities Act of 1933 (''Securities Act'').[1] As a result of these registration requirements of the U.S. securities laws, Canadian/U.S. Participants, in the past, had not been able to purchase or exchange securities for their Canadian retirement accounts as needed to meet their changing investment goals or income needs.

In 2000, the Commission issued a rule that enabled Canadian/U.S. Participants to manage the assets in their Canadian retirement accounts by providing relief from the U.S. registration requirements for offers of securities of foreign issuers to Canadian/U.S. Participants and sales to their accounts.[2] Rule 237 under the Securities Act[3] permits securities of foreign issuers, including securities of foreign funds, to be offered to Canadian/U.S. Participants and sold to their Canadian retirement accounts without

[1] 15 U.S.C. 77a.

[2] See Offer and Sale of Securities to Canadian Tax-Deferred Retirement Savings Account, Release Nos. 33–7860, 34–42905, IC–24491 (June 7, 2000) [65 FR 37672 (June 15, 2000)].

[3] 17 CFR 230.237.

being registered under the Securities Act.

Rule 237 requires written offering materials for securities that are offered and sold in reliance on the rule to disclose prominently that those securities are not registered with the Commission and may not be offered or sold in the United States unless they are registered or exempt from registration under the U.S. securities laws. Rule 237 does not require any documents to be filed with the Commission. The burden under the rule associated with adding this disclosure to written offering documents is minimal and is non-recurring. The foreign issuer, underwriter or broker-dealer can redraft an existing prospectus or other written offering material to add this disclosure statement, or may draft a sticker or supplement containing this disclosure to be added to existing offering materials. In either case, based on discussions with representatives of the Canadian fund industry, the staff estimates that it would take an average of 10 minutes per document to draft the requisite disclosure statement.

The Commission understands that there are approximately 3,500 Canadian issuers other than funds that may rely on rule 237 to make an initial public offering of their securities to Canadian/U.S. Participants. The staff estimates that in any given year approximately 35 (or 1 percent) of those issuers are likely to rely on rule 237 to make a public offering of their securities to participants, and that each of those 35 issuers, on average, distributes 3 different written offering documents concerning those securities, for a total of 105 offering documents.

The staff therefore estimates that during each year that rule 237 is in effect; approximately 35 respondents [4] would be required to make 105 responses by adding the new disclosure statements to approximately 105 written offering documents. Thus, the staff estimates that the total annual burden associated with the rule 237 disclosure requirement would be approximately 17.5 hours (105 offering documents x 10 minutes per document). The total annual cost of burden hours is estimated to be $5,110.00 (17.5 hours x $292 [5] per hour of attorney time).

In addition, issuers from foreign countries other than Canada could rely on rule 237 to offer securities to Canadian/U.S. Participants and sell securities to their accounts without becoming subject to the registration requirements of the Securities Act. Because Canadian law strictly limits the amount of foreign investments that may be held in a Canadian retirement account, however, the staff believes that the number of issuers from other countries that relies on rule 237, and that therefore is required to comply with the offering document disclosure requirements, is negligible.

These burden hour estimates are based upon the Commission staff's experience and discussions with the fund industry. The estimates of average burden hours are made solely for the purposes of the Paperwork Reduction Act. These estimates are not derived from a comprehensive or even a representative survey or study of the costs of Commission rules.

Compliance with the collection of information requirements of the rule is mandatory and is necessary to comply with the requirements of the rule in general. An agency may not conduct or sponsor, and a person is not required to respond to, a collection of information unless it displays a currently valid control number.

Please direct general comments regarding the above information to the following persons: (i) Desk Officer for the Securities and Exchange Commission, Office of Management and Budget, Room 10102, New Executive Office Building, Washington, DC 20503 or e-mail to: *Alexander_T._Hunt@omb.eop.gov*; and (ii) R. Corey Booth, Director/Chief Information Officer, Securities and Exchange Commission, C/O Shirley Martinson, 6432 General Green Way, Alexandria, VA 22312; or send an email to: *PRA_Mailbox@sec.gov*. Comments must be submitted to OMB within 30 days of this notice.

Dated: January 14, 2008.

Florence E. Harmon,

Deputy Secretary.

[FR Doc. E8–1058 Filed 1–22–08; 8:45 am]

BILLING CODE 8011–01–P

[4] This estimate of respondents also assumes that all respondents are foreign issuers. The number of respondents may be greater if foreign underwriters or broker-dealers draft a sticker or supplement to add the required disclosure to an existing offering document.

[5] The Commission's estimate concerning the wage rate for attorney time is based on salary information for the securities industry compiled by the Securities Industry Association. $292 per hour figure for an attorney is from the SIA Report on Management & Professional Earnings in the Securities Industry 2006, modified to account for an 1800-hour work-year and multiplied by 5.35 to account for bonuses, firm size, employee benefits and overhead.

SECURITIES AND EXCHANGE COMMISSION

Submission for OMB Review; Comment Request

Upon Written Request, Copies Available From: Securities and Exchange Commission, Office of Investor Education and Advocacy, Washington, DC 20549–0213.

Extension:

Rule 7d–2, SEC File No. 270–464, OMB Control No. 3235–0527.

Notice is hereby given that, pursuant to the Paperwork Reduction Act of 1995 (44 U.S.C. 3501–3520), the Securities and Exchange Commission (the ''Commission'') has submitted to the Office of Management and Budget a request for extension and approval of the collection of information discussed below.

In Canada, as in the United States, individuals can invest a portion of their earnings in tax-deferred retirement savings accounts (''Canadian retirement accounts''). In cases where these individuals move to the United States, these participants (''Canadian/U.S. Participants'' or ''participants'') may not be able to manage their Canadian retirement account investments. Most securities and most investment companies (''funds'') that are ''qualified investments'' for Canadian retirement accounts are not registered under the U.S. securities laws. Those securities, therefore, generally cannot be publicly offered and sold in the United States without violating the registration requirements of the Securities Act of 1933 (''Securities Act'') [1] and, in the case of securities of an unregistered fund, the Investment Company Act of 1940 (''Investment Company Act'').[2] As a result of these registration requirements of the U.S. securities laws, Canadian/U.S. Participants, in the past, had not been able to purchase or exchange securities for their Canadian retirement accounts as needed to meet their changing investment goals or income needs.

In 2000, the Commission issued two rules that enabled Canadian/U.S. Participants to manage the assets in their Canadian retirement accounts by providing relief from the U.S. registration requirements for offers of securities of foreign issuers to Canadian/U.S. Participants and sales to their accounts.[3] Rule 237 under the Securities

[1] 15 U.S.C. 77a.

[2] 15 U.S.C. 80a.

[3] See Offer and Sale of Securities to Canadian Tax-Deferred Retirement Savings Account, Release

Continued

Act[4] permits securities of foreign issuers, including securities of foreign funds, to be offered to Canadian/U.S. Participants and sold to their Canadian retirement accounts without being registered under the Securities Act. Rule 7d–2 under the Investment Company Act[5] permits foreign funds to offer securities to Canadian/U.S. Participants and sell securities to their Canadian retirement accounts without registering as investment companies under the Investment Company Act.

Rule 7d–2 requires written offering documents for securities offered or sold in reliance on the rule to disclose prominently that the securities are not registered with the Commission and may not be offered or sold in the United States unless registered or exempt from registration under the U.S. securities laws, and also to disclose prominently that the fund that issued the securities is not registered with the Commission. The burden under the rule associated with adding this disclosure to written offering documents is minimal and is non-recurring. The foreign issuer, underwriter or broker-dealer can redraft an existing prospectus or other written offering material to add this disclosure statement, or may draft a sticker or supplement containing this disclosure to be added to existing offering materials. In either case, based on discussions with representatives of the Canadian fund industry, the staff estimates that it would take an average of 10 minutes per document to draft the requisite disclosure statement.

The staff estimates that there are approximately 1,994 publicly offered Canadian funds that potentially would rely on the rule to offer securities to participants and sell securities to their Canadian retirement accounts without registering under the Investment Company Act. Most of these funds have already relied upon the rule and have made the one time change to their offering documents required to rely on the rule. The staff estimates that approximately 100 (5 percent) additional Canadian funds may newly rely on the rule each year to offer securities to Canadian/U.S. Participants and sell securities to their Canadian retirement accounts, thus incurring the paperwork burden required under the rule. The staff estimates that each of those funds, on average, distributes 3 different written offering documents concerning those securities, for a total of 300 offering documents. The staff therefore estimates that approximately 100 respondents would make 300 responses by adding the new disclosure statement to approximately 300 written offering documents. The staff therefore estimates that the annual burden associated with the rule 7d–2 disclosure requirement would be approximately 50 hours (300 offering documents × 10 minutes per document). The total annual cost of these burden hours is estimated to be $14,600.00 (50 hours × $292.00 per hour of attorney time).[6]

These burden hour estimates are based upon the Commission staff's experience and discussions with the fund industry. The estimates of average burden hours are made solely for the purposes of the Paperwork Reduction Act. These estimates are not derived from a comprehensive or even a representative survey or study of the costs of Commission rules.

Compliance with the collection of information requirements of the rule is mandatory and is necessary to comply with the requirements of the rule in general. An agency may not conduct or sponsor, and a person is not required to respond to, a collection of information unless it displays a currently valid control number.

Please direct general comments regarding the above information to the following persons: (i) Desk Officer for the Securities and Exchange Commission, Office of Management and Budget, Room 10102, New Executive Office Building, Washington, DC 20503 or e-mail to: *Alexander_T._Hunt@omb.eop.gov*; and (ii) R. Corey Booth, Director/Chief Information Officer, Securities and Exchange Commission, C/O Shirley Martinson, 6432 General Green Way, Alexandria, VA 22312; or send an e-mail to: *PRA_Mailbox@sec.gov*. Comments must be submitted to OMB within 30 days of this notice.

Dated: January 14, 2008.

Florence E. Harmon,

Deputy Secretary.

[FR Doc. E8–1060 Filed 1–22–08; 8:45 am]

BILLING CODE 8011–01–P

Nos. 33–7860, 34–42905, IC–24491 (June 7, 2000) [65 FR 37672 (June 15, 2000)].

[4] 17 CFR 230.237.

[5] 17 CFR 270.7d–2.

[6] The Commission's estimate concerning the wage rate for attorney time is based on salary information for the securities industry compiled by the Securities Industry Association. $292 per hour figure for an attorney is from the SIA Report on Management & Professional Earnings in the Securities Industry 2005, modified to account for an 1800-hour work-year and multiplied by 5.35 to account for bonuses, firm size, employee benefits and overhead.

SECURITIES AND EXCHANGE COMMISSION

[Release Nos. 33–8882; 34–57162; File No. 265–24]

Advisory Committee on Improvements to Financial Reporting

AGENCY: Securities and Exchange Commission.

ACTION: Notice of Meeting of SEC Advisory Committee on Improvements to Financial Reporting.

SUMMARY: The Securities and Exchange Commission Advisory Committee on Improvements to Financial Reporting is providing notice that it will hold a public telephone conference meeting on Monday, February 11, 2008 beginning at 2 pm. Members of the public may take part in the meeting by listening to the webcast accessible on the Commission's Web site at *http://www.sec.gov* or by calling telephone number (888) 830–6260 and using code number 763960. Persons needing special accommodations to take part because of a disability should notify a contact person listed below.

The agenda for the meeting includes: (1) Discussion and deliberation of a draft progress report with developed proposals, conceptual approaches and currently identified future considerations based on the Committee's deliberations of the Draft Decision Memorandum presented at its January 11, 2008 meeting in the areas of substantive complexity, standard setting, audit process and compliance and delivery of financial information; (2) a vote on a proposal to publish the Committee's draft progress report in final form to the Commission and for public feedback; and (3) a discussion of next steps and planning for the next meeting. The public is invited to submit written statements for the meeting.

DATES: Written statements should be received on or before February 4, 2008.

ADDRESSES: Written statements may be submitted by any of the following methods:

Electronic Comments

- Use the Commission's Internet submission form (*http://www.sec.gov/rules/other.shtml*); or
- Send an e-mail to *rule-comments@sec.gov.* Please include File Number 265–24 on the subject line.

Paper Comments

- Send paper statements in triplicate to Nancy M. Morris, Federal Advisory Committee Management Officer, Securities and Exchange Commission,

100 F Street, NE., Washington, DC 20549–1090.

All submissions should refer to File No. 265–24. This file number should be included on the subject line if e-mail is used. To help us process and review your statements more efficiently, please use only one method. The Commission staff will post all statements on the Advisory Committee's Web site (*http://www.sec.gov/about/offices/oca/acifr.shtml*). Statements also will be available for public inspection and copying in the Commission's Public Reference Room, 100 F Street, NE., Washington, DC 20549, on official business days between the hours of 10 a.m. and 3 p.m. All statements received will be posted without change; we do not edit personal identifying information from submissions. You should submit only information that you wish to make available publicly.

FOR FURTHER INFORMATION CONTACT: James L. Kroeker, Deputy Chief Accountant, or Shelly C. Luisi, Senior Associate Chief Accountant, at (202) 551–5300, Office of the Chief Accountant, Securities and Exchange Commission, 100 F Street, NE., Washington, DC 20549–6561.

SUPPLEMENTARY INFORMATION: In accordance with Section 10(a) of the Federal Advisory Committee Act, 5 U.S.C. App. 1, section 10(a), James L. Kroeker, Designated Federal Officer of the Committee, has approved publication of this notice.

Dated: January 16, 2008.

Nancy M. Morris,

Committee Management Officer.

[FR Doc. E8–1053 Filed 1–22–08; 8:45 am]

BILLING CODE 8011–01–P

SECURITIES AND EXCHANGE COMMISSION

Sunshine Act Meeting

Notice is hereby given, pursuant to the provisions of the Government in the Sunshine Act, Public Law 94–409, that the Securities and Exchange Commission will hold the following meeting during the week of January 21, 2008:

A Closed Meeting will be held on Thursday, January 24, 2008 at 2 p.m.

Commissioners, Counsel to the Commissioners, the Secretary to the Commission, and recording secretaries will attend the Closed Meeting. Certain staff members who have an interest in the matters may also be present.

The General Counsel of the Commission, or his designee, has certified that, in his opinion, one or more of the exemptions set forth in 5 U.S.C. 552b(c)(3), (5), (7), (8), (9)(B), and (10) and 17 CFR 200.402(a)(3), (5), (7), (8), 9(ii) and (10), permit consideration of the scheduled matters at the Closed Meeting.

Commissioner Atkins, as duty officer, voted to consider the items listed for the closed meeting in closed session.

The subject matter of the Closed Meeting scheduled for Thursday, January 24, 2008 will be:

Formal orders of investigations;
Institution and settlement of injunctive actions;
Institution and settlement of administrative proceedings of an enforcement nature;
A regulatory matter regarding a financial institution; and
Other matters related to enforcement proceedings.

At times, changes in Commission priorities require alterations in the scheduling of meeting items.

For further information and to ascertain what, if any, matters have been added, deleted or postponed, please contact:

The Office of the Secretary at (202) 551–5400.

Dated: January 17, 2008.

Nancy M. Morris,

Secretary

[FR Doc. E8–1072 Filed 1–22–08; 8:45 am]

BILLING CODE 8011–01–P

SECURITIES AND EXCHANGE COMMISSION

[Investment Company Act Release No. 28119; 812–13424]

Northern Institutional Funds, et al.; Notice of Application

January 16, 2008.

AGENCY: Securities and Exchange Commission (''Commission'').

ACTION: Notice of application for an order under section 12(d)(1)(J) of the Investment Company Act of 1940 (''Act'') for an exemption from sections 12(d)(1)(A) and (B) of the Act, and under sections 6(c) and 17(b) of the Act for an exemption from section 17(a) of the Act.

SUMMARY OF THE APPLICATION: Applicants request an order that would permit certain registered open-end management investment companies to acquire shares of other registered open-end management investment companies and unit investment trusts that are within and outside the same group of investment companies.

APPLICANTS: Northern Institutional Funds (''NIF''), Northern Funds (''NF,'' and together with NIF, the ''Trusts''), and Northern Trust Investments, N.A. (''Adviser'').

FILING DATES: The application was filed on September 12, 2007. Applicants have agreed to file an amendment during the notice period, the substance of which is reflected in this notice.

HEARING OR NOTIFICATION OF HEARING: An order granting the application will be issued unless the Commission orders a hearing. Interested persons may request a hearing by writing to the Commission's Secretary and serving applicants with a copy of the request, personally or by mail. Hearing requests should be received by the Commission by 5:30 p.m. on February 11, 2008, and should be accompanied by proof of service on applicants in the form of an affidavit or, for lawyers, a certificate of service. Hearing requests should state the nature of the writer's interest, the reason for the request, and the issues contested. Persons who wish to be notified of a hearing may request notification by writing to the Commission's Secretary.

ADDRESSES: Secretary, U.S. Securities and Exchange Commission, 100 F Street, NE., Washington, DC 20549–1090; Applicants, c/o Diana E. McCarthy, Drinker Biddle & Reath LLP, One Logan Square, 18th and Cherry Streets, Philadelphia, PA 19103–6996.

FOR FURTHER INFORMATION CONTACT: Emerson S. Davis, Sr., Senior Counsel, at (202) 551–6868, or Mary Kay Frech, Branch Chief, at (202) 551–6821 (Office of Investment Company Regulation, Division of Investment Management).

SUPPLEMENTARY INFORMATION: The following is a summary of the application. The complete application may be obtained for a fee at the Commission's Public Reference Desk, 100 F Street, NE., Washington, DC 20549–0102 (telephone (202) 551–5850).

Applicants' Representations

1. The Trusts, organized as Delaware statutory trusts, are registered under the Act as open-end management investment companies and offer multiple series, each of which has its own distinct investment objectives and policies (''Funds''). The Balanced Portfolio, a series of NIF, is currently the only Fund that intends to rely on the requested relief. The Adviser, a wholly-owned subsidiary of The Northern Trust Company, is registered as an investment adviser under the Investment Advisers Act of 1940 and serves as investment adviser to the Funds.

2. Applicants request relief to permit: (a) A Fund (a ''Fund of Funds'') to acquire shares of registered open-end management investment companies that are not part of the ''same group of investment companies'' (as defined in section 12(d)(1)(G)(ii) of the Act) as the Fund of Funds (the ''Unaffiliated Investment Companies'') and unit investment trusts (''UITs'') that are not part of the same group of investment companies as the Fund of Funds (''Unaffiliated Trusts,'' and together with Unaffiliated Investment Companies, the ''Unaffiliated Funds''); (b) the Unaffiliated Funds, their principal underwriter and any broker or dealer registered under the Securities Exchange Act of 1934 (''Broker'') to sell their shares to the Fund of Funds; (c) the Fund of Funds to acquire shares of certain other Funds in the same group of investment companies as the Fund of Funds (the ''Affiliated Funds,'' and together with the Unaffiliated Funds, the ''Underlying Funds''); and (d) the Affiliated Funds, their principal underwriter and Brokers to sell their shares to the Fund of Funds.[1] Certain of the Unaffiliated Funds may be registered under the Act as either UITs or open-end management investment companies and have received exemptive relief to permit their shares be listed and traded on a national securities exchange at negotiated prices (''ETFs'').[2] Each Fund of Funds also may invest in government securities, domestic and foreign common and preferred stock, income-bearing securities, certain types of futures contracts and options thereon, and in other securities and investments that are not issued by registered investment companies and that are consistent with its investment objective, including money market instruments.

Applicants' Legal Analysis

A. Section 12(d)(1)

1. Section 12(d)(1)(A) of the Act prohibits a registered investment company from acquiring shares of an investment company if the securities represent more than 3% of the total outstanding voting stock of the acquired company, more than 5% of the total assets of the acquiring company, or, together with the securities of any other investment companies, more than 10% of the total assets of the acquiring company. Section 12(d)(1)(B) of the Act prohibits a registered open-end investment company, its principal underwriter and any broker or dealer from selling the shares of the investment company to another investment company if the sale will cause the acquiring company to own more than 3% of the acquired company's voting stock, or if the sale will cause more than 10% of the acquired company's voting stock to be owned by investment companies generally.

2. Section 12(d)(1)(J) of the Act provides that the Commission may exempt any person, security, or transaction, or any class or classes of persons, securities or transactions, from any provision of section 12(d)(1) if the exemption is consistent with the public interest and the protection of investors. Applicants seek an exemption under section 12(d)(1)(J) of the Act to permit the Funds of Funds to acquire shares of the Underlying Funds in excess of the limits set forth in section 12(d)(1)(A) of the Act and to permit the Underlying Funds, their principal underwriters and any Broker to sell shares to the Funds of Funds in excess of the limits set forth in section 12(d)(1)(B) of the Act.

3. Applicants state that the proposed arrangement will not give rise to the policy concerns underlying sections 12(d)(1)(A) and (B), which include concerns about undue influence by a fund of funds or its affiliated persons over underlying funds, excessive layering of fees, and overly complex fund structures. Accordingly, applicants believe that the requested exemption is consistent with the public interest and the protection of investors.

4. Applicants state that the proposed arrangement will not result in undue influence by a Fund of Funds or its affiliated persons over the Underlying Funds. The concern about undue influence does not arise in connection with a Fund of Funds' investment in the Affiliated Funds, since they are part of the same group of investment companies. To limit the control that a Fund of Funds or its affiliated persons may have over an Unaffiliated Fund, applicants propose condition 1 below, which prohibits: (a) The Adviser and any person controlling, controlled by or under common control with the Adviser, any investment company and any issuer that would be an investment company but for section 3(c)(1) or section 3(c)(7) of the Act advised or sponsored by the Adviser or any person controlling, controlled by or under common control with the Adviser (collectively, the ''Group''), and (b) any investment adviser within the meaning of section 2(a)(20)(B) of the Act to a Fund of Funds (''Sub-Adviser'') and any person controlling, controlled by or under common control with the Sub-Adviser, and any investment company or issuer that would be an investment company but for section 3(c)(1) or 3(c)(7) of the Act (or portion of such investment company or issuer) advised by the Sub-Adviser or any person controlling, controlled by or under common control with the Sub-Adviser (collectively, the ''Sub-Adviser Group'') from controlling (individually or in the aggregate) an Unaffiliated Fund within the meaning of section 2(a)(9) of the Act.

5. Applicants further state that condition 2 below precludes a Fund of Funds or the Adviser, any Sub-Adviser, promoter or principal underwriter of a Fund of Funds, and any person controlling, controlled by, or under common control with any of those entities (each, a ''Fund Affiliate'') from taking advantage of an Unaffiliated Fund with respect to transactions between a Fund of Funds or a Fund Affiliate and the Unaffiliated Fund or its investment adviser(s), sponsor, promoter, and principal underwriter and any person controlling, controlled by or under common control with any of those entities (each, an ''Unaffiliated Fund Affiliate''). No Fund of Funds or Fund Affiliate (except to the extent it is acting in its capacity as an investment adviser to an Unaffiliated Investment Company or sponsor to an Unaffiliated Trust) will cause an Unaffiliated Fund to purchase a security in an offering of securities during the existence of any underwriting or selling syndicate of which a principal underwriter is an officer, director, trustee, advisory board member, investment adviser, Sub-Adviser, or employee of the Fund of Funds, or a person of which any such officer, director, trustee, investment adviser, Sub-Adviser, member of an advisory board, or employee is an affiliated person (each, an ''Underwriting Affiliate,'' except any person whose relationship to the Unaffiliated Fund is covered by section 10(f) of the Act is not an Underwriting Affiliate). An offering of securities during the existence of any underwriting or selling syndicate of which a principal underwriter is an Underwriting Affiliate is an ''Affiliated Underwriting.''

6. To further assure that an Unaffiliated Investment Company

[1] Applicants request that the order extend to any future Funds, and any other existing or future registered open-end management investment companies and their series that are part of the same group of investment companies, as defined in section 12(d)(1)(G)(ii) of the Act, as the Trusts and are, or may in the future be, advised by the Adviser or any other investment adviser controlling, controlled by, or under common control with the Adviser (included in the term, ''Funds''). The Trusts are the only registered investment companies that currently intend to rely on the requested order. Any other entity that relies on the order in the future will comply with the terms and conditions of the application.

[2] Certain of the Affiliated Funds also may operate as ETFs; however, no Fund of Funds will be an ETF. *See also infra* note 5.

understands the implications of an investment by a Fund of Funds under the requested order, prior to a Fund of Funds' investment in the shares of an Unaffiliated Investment Company in excess of the limit in section 12(d)(1)(A)(i) of the Act, a Fund of Funds and the Unaffiliated Investment Company will execute an agreement stating, without limitation, that their boards of directors or trustees (''Boards'') and their investment advisers understand the terms and conditions of the order and agree to fulfill their responsibilities under the order (''Participation Agreement'').

7. Applicants do not believe that the proposed arrangement will involve excessive layering of fees. The Board of each Fund of Funds, including a majority of the trustees who are not ''interested persons,'' as defined in section 2(a)(19) of the Act (''Independent Trustees''), will find that the advisory fees charged under the advisory contract are based on services provided that are in addition to, rather than duplicative of, services provided pursuant to any Underlying Fund's advisory contract(s). Applicants further state that the Adviser will waive fees otherwise payable to it by a Fund of Funds in an amount at least equal to any compensation (including fees received pursuant to any plan adopted by an Unaffiliated Investment Company pursuant to rule 12b–1 under the Act) received from an Unaffiliated Fund by the Adviser, or an affiliated person of the Adviser, other than any advisory fees paid to the Adviser or an affiliated person of the Adviser by the Unaffiliated Fund, in connection with the investment by the Fund of Funds in the Unaffiliated Fund.

8. Applicants state that any sales charges and/or service fees charged with respect to shares of a Fund of Funds will not exceed the limits applicable to funds of funds set forth in Rule 2830 of the Conduct Rules of the NASD.

9. Applicants state that the proposed arrangement will not create an overly complex fund structure. Applicants note that an Underlying Fund will be prohibited from acquiring securities of any investment company or company relying on section 3(c)(1) or 3(c)(7) of the Act in excess of the limits contained in section 12(d)(1)(A) of the Act, except in certain circumstances identified in condition 12 below. Applicants also represent that a Fund of Funds' prospectus and sales literature will contain concise, ''plain English'' disclosure designed to inform investors about the unique characteristics of the proposed arrangement, including, but not limited to, the expense structure and the additional expenses of investing in Underlying Funds.

B. Section 17(a)

1. Section 17(a) of the Act generally prohibits sales or purchases of securities between a registered investment company and any affiliated persons of the company. Section 2(a)(3) of the Act defines an ''affiliated person'' of another person to include (a) any person directly or indirectly owning, controlling, or holding with power to vote, 5% or more of the outstanding voting securities of the other person; (b) any person 5% or more of whose outstanding voting securities are directly or indirectly owned, controlled, or held with power to vote by the other person; and (c) any person directly or indirectly controlling, controlled by, or under common control with the other person.

2. Applicants state that the Funds of Funds and the Affiliated Funds may be deemed to be under common control of the Adviser and therefore affiliated persons of one another. Applicants also state that a Fund of Funds and the Underlying Funds may be deemed to be affiliated persons of each other if a Fund of Funds acquires 5% or more of an Underlying Fund's outstanding voting securities. In light of these possible affiliations, section 17(a) could prevent an Underlying Fund from selling shares to and redeeming shares from a Fund of Funds.[3]

3. Section 17(b) of the Act authorizes the Commission to grant an order permitting a transaction otherwise prohibited by section 17(a) if it finds that (a) the terms of the proposed transaction are fair and reasonable and do not involve overreaching on the part of any person concerned; (b) the proposed transaction is consistent with the policies of each registered investment company involved; and (c) the proposed transaction is consistent with the general purposes of the Act. Section 6(c) of the Act permits the Commission to exempt any person or transactions from any provision of the Act if such exemption is necessary or appropriate in the public interest and consistent with the protection of investors and the purposes fairly intended by the policy and provisions of the Act.

4. Applicants submit that the proposed transactions satisfy the requirements for relief under sections 17(b) and 6(c) of the Act as the terms are fair and reasonable and do not involve overreaching. Applicants state that the terms upon which an Underlying Fund will sell its shares to or purchase its shares from a Fund of Funds will be based on the net asset value of each Underlying Fund.[4] Applicants also state that the proposed transactions will be consistent with the policies of each Fund of Funds and Underlying Fund, and with the general purposes of the Act.

Applicants' Conditions

Applicants agree that any order granting the requested relief shall be subject to the following conditions:

1. The members of the Group will not control (individually or in the aggregate) an Unaffiliated Fund within the meaning of section 2(a)(9) of the Act. The members of a Sub-Adviser Group will not control (individually or in the aggregate) an Unaffiliated Fund within the meaning of section 2(a)(9) of the Act. If, as a result of a decrease in the outstanding voting securities of an Unaffiliated Fund, the Group or a Sub-Adviser Group, each in the aggregate, becomes a holder of more than 25% of the outstanding voting securities of the Unaffiliated Fund, then the Group or the Sub-Adviser Group will vote its shares of the Unaffiliated Fund in the same proportion as the vote of all other holders of the Unaffiliated Fund's shares. This condition will not apply to a Sub-Adviser Group with respect to an Unaffiliated Fund for which the Sub-Adviser or a person controlling, controlled by, or under common control with the Sub-Adviser acts as the investment adviser within the meaning of section 2(a)(20)(A) of the Act (in the case of an Unaffiliated Investment Company) or as the sponsor (in the case of an Unaffiliated Trust).

2. No Fund of Funds or Fund Affiliate will cause any existing or potential investment by the Fund of Funds in an Unaffiliated Fund to influence the terms of any services or transactions between

[3] Applicants acknowledge that receipt of any compensation by (a) an affiliated person of a Fund of Funds, or an affiliated person of such person, for the purchase by the Fund of Funds of shares of an Underlying Fund or (b) an affiliated person of an Underlying Fund, or an affiliated person of such person, for the sale by the Underlying Fund of its shares to a Fund of Funds may be prohibited by section 17(e)(1) of the Act. The Participation Agreement also will include this acknowledgement.

[4] Applicants note that a Fund of Funds generally would purchase and sell shares of an Unaffiliated Fund that operates as an ETF through secondary market transactions at market prices rather than through principal transactions with the Unaffiliated Fund at net asset value. Applicants would not rely on the requested relief from section 17(a) for such secondary market transactions. A Fund of Funds could seek to transact in ''Creation Units'' directly with an ETF that is an Unaffiliated Fund pursuant to the requested section 17(a) relief. Applicants are not requesting, and the Commission is not granting, any relief from section 17(a) to purchase and redeem Creation Units of any ETF that is an Affiliated Fund.

the Fund of Funds or a Fund Affiliate and the Unaffiliated Fund or an Unaffiliated Fund Affiliate.

3. The Board of each Fund of Funds, including a majority of the Independent Trustees, will adopt procedures reasonably designed to assure that its Adviser and any Sub-Adviser to the Fund of Funds are conducting the investment program of the Fund of Funds without taking into account any consideration received by the Fund of Funds or Fund Affiliate from an Unaffiliated Fund or an Unaffiliated Fund Affiliate in connection with any services or transactions.

4. Once an investment by a Fund of Funds in the securities of an Unaffiliated Investment Company exceeds the limit of section 12(d)(1)(A)(i) of the Act, the Board of the Unaffiliated Investment Company, including a majority of the Independent Trustees, will determine that any consideration paid by the Unaffiliated Investment Company to a Fund of Funds or a Fund Affiliate in connection with any services or transactions: (a) Is fair and reasonable in relation to the nature and quality of the services and benefits received by the Unaffiliated Investment Company; (b) is within the range of consideration that the Unaffiliated Investment Company would be required to pay to another unaffiliated entity in connection with the same services or transactions; and (c) does not involve overreaching on the part of any person concerned. This condition does not apply with respect to any services or transactions between an Unaffiliated Investment Company and its investment adviser(s), or any person controlling, controlled by, or under common control with such investment adviser(s).

5. No Fund of Funds or Fund Affiliate (except to the extent it is acting in its capacity as an investment adviser to an Unaffiliated Investment Company or sponsor to an Unaffiliated Trust) will cause an Unaffiliated Fund to purchase a security in any Affiliated Underwriting.

6. The Board of an Unaffiliated Investment Company, including a majority of the Independent Trustees, will adopt procedures reasonably designed to monitor any purchases of securities by the Unaffiliated Investment Company in an Affiliated Underwriting once an investment by a Fund of Funds in the securities of the Unaffiliated Investment Company exceeds the limit of section 12(d)(1)(A)(i) of the Act, including any purchases made directly from an Underwriting Affiliate. The Board of the Unaffiliated Investment Company will review these procedures periodically, but no less frequently than annually, to determine whether the purchases were influenced by the investment by the Fund of Funds in the Unaffiliated Investment Company. The Board of the Unaffiliated Investment Company will consider, among other things: (a) Whether the purchases were consistent with the investment objectives and policies of the Unaffiliated Investment Company; (b) how the performance of securities purchased in an Affiliated Underwriting compares to the performance of comparable securities purchased during a comparable period of time in underwritings other than Affiliated Underwritings or to a benchmark such as a comparable market index; and (c) whether the amount of securities purchased by the Unaffiliated Investment Company in Affiliated Underwritings and the amount purchased directly from an Underwriting Affiliate have changed significantly from prior years. The Board of an Unaffiliated Investment Company will take any appropriate actions based on its review, including, if appropriate, the institution of procedures designed to assure that purchases of securities in Affiliated Underwritings are in the best interests of shareholders.

7. Each Unaffiliated Investment Company will maintain and preserve permanently in an easily accessible place a written copy of the procedures described in the preceding condition, and any modifications to such procedures, and will maintain and preserve for a period of not less than six years from the end of the fiscal year in which any purchase from an Affiliated Underwriting occurred, the first two years in an easily accessible place, a written record of each purchase of securities in an Affiliated Underwriting once an investment by a Fund of Funds in the securities of an Unaffiliated Investment Company exceeds the limit of section 12(d)(1)(A)(i) of the Act, setting forth the (a) party from whom the securities were acquired, (b) identity of the underwriting syndicate's members, (c) terms of the purchase, and (d) information or materials upon which the determinations of the Board of the Unaffiliated Investment Company were made.

8. Prior to its investment in shares of an Unaffiliated Investment Company in excess of the limit in section 12(d)(1)(A)(i) of the Act, the Fund of Funds and the Unaffiliated Investment Company will execute a Participation Agreement stating, without limitation, that their Boards and their investment advisers understand the terms and conditions of the order and agree to fulfill their responsibilities under the order. At the time of its investment in shares of an Unaffiliated Investment Company in excess of the limit in section 12(d)(1)(A)(i), a Fund of Funds will notify the Unaffiliated Investment Company of the investment. At such time, the Fund of Funds will also transmit to the Unaffiliated Investment Company a list of the names of each Fund of Funds Affiliate and Underwriting Affiliate. The Fund of Funds will notify the Unaffiliated Investment Company of any changes to the list as soon as reasonably practicable after a change occurs. The Unaffiliated Investment Company and the Fund of Funds will maintain and preserve a copy of the order, the Participation Agreement, and the list with any updated information for the duration of the investment and for a period of not less than six years thereafter, the first two years in an easily accessible place.

9. Before approving any advisory contract under section 15 of the Act, the Board of each Fund of Funds, including a majority of the Independent Trustees, shall find that the advisory fees charged under the advisory contract are based on services provided that are in addition to, rather than duplicative of, services provided under the advisory contract(s) of any Underlying Fund in which the Fund of Funds may invest. Such finding, and the basis upon which the finding was made, will be recorded fully in the minute books of the appropriate Fund of Funds.

10. The Adviser will waive fees otherwise payable to it by a Fund of Funds in an amount at least equal to any compensation (including fees received pursuant to any plan adopted by an Unaffiliated Investment Company pursuant to rule 12b–1 under the Act) received from an Unaffiliated Fund by the Adviser, or an affiliated person of the Adviser, other than any advisory fees paid to the Adviser or its affiliated person by the Unaffiliated Fund, in connection with the investment by the Fund of Funds in the Unaffiliated Fund. Any Sub-Adviser will waive fees otherwise payable to the Sub-Adviser, directly or indirectly, by the Fund of Funds in an amount at least equal to any compensation received by the Sub-Adviser, or an affiliated person of the Sub-Adviser, from an Unaffiliated Fund, other than any advisory fees paid to the Sub-Adviser or its affiliated person by the Unaffiliated Investment Company, in connection with the investment by the Fund of Funds in the Unaffiliated Investment Company made at the direction of the Sub-Adviser. In the event that the Sub-Adviser waives fees,

the benefit of the waiver will be passed through to the Fund of Funds.

11. Any sales charges and/or service fees charged with respect to shares of a Fund of Funds will not exceed the limits applicable to funds of funds set forth in NASD Conduct Rule 2830.

12. No Underlying Fund will acquire securities of any other investment company or company relying on section 3(c)(1) or 3(c)(7) of the Act, in excess of the limits contained in section 12(d)(1)(A) of the Act, except to the extent that such Underlying Fund: (a) Receives securities of another investment company as a dividend or as a result of a plan of reorganization of a company (other than a plan devised for the purpose of evading section 12(d)(1) of the Act); or (b) acquires (or is deemed to have acquired) securities of another investment company pursuant to exemptive relief from the Commission permitting such Underlying Fund to: (i) Acquire securities of one or more affiliated investment companies for short-term cash management purposes, or (ii) engage in interfund borrowing and lending transactions.

For the Commission, by the Division of Investment Management, pursuant to delegated authority.

Florence E. Harmon,

Deputy Secretary.

[FR Doc. E8–1057 Filed 1–22–08; 8:45 am]

BILLING CODE 8011–01–P

SECURITIES AND EXCHANGE COMMISSION

[Release No. 34–57154; File No. SR–Amex–2008–03]

Self-Regulatory Organizations; American Stock Exchange LLC; Notice of Filing and Immediate Effectiveness of a Proposed Rule Change Relating to ''Amex Only'' Orders and Quotes

January 15, 2008.

Pursuant to Section 19(b)(1) of the Securities Exchange Act of 1934 (''Act'')[1] and Rule 19b–4 thereunder,[2] notice is hereby given that on January 9, 2008, the American Stock Exchange LLC (''Amex'' or ''Exchange'') filed with the Securities and Exchange Commission (''Commission'') the proposed rule change as described in Items I and II below, which Items have been prepared substantially by the Amex. The Amex has submitted the proposed rule change under Section 19(b)(3)(A) of the Act[3] and Rule 19b–4(f)(6) thereunder,[4] which renders the proposal effective upon filing with the Commission. The Commission is publishing this notice to solicit comments on the proposed rule change from interested persons.

I. Self-Regulatory Organization's Statement of the Terms of Substance of the Proposed Rule Change

The Amex proposes to amend Rule 131—AEMI, ''Types of Orders,'' to provide for ''Amex Only'' orders and quotes that will trade only at the Amex or be cancelled.

The text of the proposed rule change is available at *http://www.amex.com,* the principal office of the Amex, and the Commission's Public Reference Room.

II. Self-Regulatory Organization's Statement of the Purpose of, and Statutory Basis for, the Proposed Rule Change

In its filing with the Commission, the Amex included statements concerning the purpose of and basis for the proposed rule change and discussed any comments it received on the proposed rule change. The text of these statements may be examined at the places specified in Item IV below. The Amex has prepared summaries, set forth in sections A, B, and C below, of the most significant aspects of such statements.

A. Self-Regulatory Organization's Statement of the Purpose of, and Statutory Basis for, the Proposed Rule Change

1. Purpose

The Amex proposes to add new paragraph (z) to Rule 131—AEMI to adopt a new order and a new quote type: the ''Amex Only'' order (''AOO'') and the ''Amex Only'' quote (''AOQ''). AOOs and AOQs will enable quoting and other market participants to post liquidity on the AEMI Book that will trade only at the Amex, and therefore will not incur the costs of routing to away markets. If any portion of an AOO or AOQ would otherwise be required, under Regulation NMS,[5] to route to another market to avoid a trade-through or a locked or crossed market, AEMI would automatically cancel that portion of the AOO or AOQ. Additionally, if auto-ex is disabled during the regular trading session, all AOOs or AOQs on the AEMI Book would be cancelled (and all incoming AOOs and AOQs rejected), because neither AOOs nor AOQs would be permitted to participate in intra-day pair-offs.

AOOs and AOQs may be entered only during the pre-opening or regular trading session. AOOs may be limit or market orders. Quoting participants entering AOQs are limited to one per price point per side of the market in the particular security being quoted, and only those streaming quotes to the Amex via proprietary systems will have AOQ functionality, when implemented.[6]

The Amex states that it is introducing AOOs and AOQs in response to market participants' strong demands for more flexible order and quote types that will provide more control over transaction charges—one of the primary present drivers of order flow decisions. By using AOOs and AOQs, market participants on Amex will be able to be certain of either trading immediately against the contra side of the market on Amex, posting all or part of their order/quote on the AEMI Book, or cancelling the order/quote. The Amex notes that another market already has a similar order type in place,[7] so competitive reasons also are driving the Amex's decision to offer comparable functionality to liquidity providers.

2. Statutory Basis

The proposed rule change is designed to be consistent with Regulation NMS, as well as Section 6(b) of the Act,[8] in general, and furthers the objectives of Section 6(b)(5) of the Act,[9] in particular, in that it is designed to prevent fraudulent and manipulative acts and practices, to promote just and equitable principles of trade, to remove impediments to and perfect the mechanism of a free and open market and a national market system, and, in general, to protect investors and the public interest.

B. Self-Regulatory Organization's Statement on Burden on Competition

The Amex believes that the proposed rule change does not impose any burden on competition that is not necessary or appropriate in furtherance of the purposes of the Act.

C. Self-Regulatory Organization's Statement on Comments on the Proposed Rule Change Received From Members, Participants or Others

No written comments were solicited or received with respect to the proposed rule change.

[1] 15 U.S.C. 78s(b)(1).

[2] 17 CFR 240.19b–4.

[3] 15 U.S.C. 78s(b)(3)(A).

[4] 17 CFR 240.19b–4(f)(6).

[5] 17 CFR 242.600 *et seq.*

[6] *See* Rule 131—AEMI, Commentary .04.

[7] *See* NYSE Rule 13 (''Do Not Ship'' or ''DNS'' Orders). *See also* Securities Exchange Act Release No. 55768 (May 15, 2007), 72 FR 28532 (May 21, 2007) (File No. SR–NYSE–2007–24) (notice of filing and immediate effectiveness of proposal to establish the DNS order type).

[8] 15 U.S.C. 78f(b).

[9] 15 U.S.C. 78f(b)(5).

III. Date of Effectiveness of the Proposed Rule Change and Timing for Commission Action

The Amex has designated the proposed rule change as one that: (1) Does not significantly affect the protection of investors or the public interest; (2) does not impose any significant burden on competition; and (3) does not become operative for 30 days from the date of filing, or such shorter time as the Commission may designate if consistent with the protection of investors and the public interest. In addition, as required under Rule 19b–4(f)(6)(iii),[10] the Amex provided the Commission with written notice of its intention to file the proposed rule change, along with a brief description of the text of the proposed rule change, at least five business days prior to filing the proposal with the Commission. Therefore, the proposed rule change has become effective pursuant to Section 19(b)(3)(A) of the Act[11] and Rule 19b–4(f)(6) thereunder.[12]

The Amex has requested that the Commission waive the 30-day operative delay for competitive reasons. The Commission hereby grants the Amex's request.[13] AOOs and AOQs are substantially similar to order types that have been established on other exchanges.[14] The Amex's proposal does not appear to raise any novel regulatory issues. Therefore, the Commission believes that waiving the 30-day operative delay is consistent with the protection of investors and the public interest.

At any time within 60 days of the filing of the proposed rule change, the Commission may summarily abrogate such rule change if it appears to the Commission that such action is necessary or appropriate in the public interest, for the protection of investors, or otherwise in furtherance of the purposes of the Act.

IV. Solicitation of Comments

Interested persons are invited to submit written data, views, and arguments concerning the foregoing, including whether the proposed rule change is consistent with the Act.

[10] 17 CFR 240.19b–4(f)(6)(iii).

[11] 15 U.S.C. 78s(b)(3)(A).

[12] 17 CFR 240.19b–4(f)(6).

[13] For purposes of waiving the 30-day operative delay, the Commission has considered the proposal's impact on efficiency, competition, and capital formation. *See* 15 U.S.C. 78c(f).

[14] *See* note 7, *supra*. *See also* Philadelphia Stock Exchange Rule 185(b)(1)(D) (providing for Limit Orders and Reserve Orders with Do Not Route instructions).

Comments may be submitted by any of the following methods:

Electronic Comments

- Use the Commission's Internet comment form (*http://www.sec.gov/rules/sro.shtml*); or
- Send an e-mail to *rule-comments@sec.gov.* Please include File Number SR–Amex–2008–03 on the subject line.

Paper Comments

- Send paper comments in triplicate to Nancy M. Morris, Secretary, Securities and Exchange Commission, Station Place, 100 F Street, NE., Washington, DC 20549–1090.

All submissions should refer to File Number SR–Amex–2008–03. This file number should be included on the subject line if e-mail is used. To help the Commission process and review your comments more efficiently, please use only one method. The Commission will post all comments on the Commission's Internet Web site (*http://www.sec.gov/rules/sro.shtml*). Copies of the submission, all subsequent amendments, all written statements with respect to the proposed rule change that are filed with the Commission, and all written communications relating to the proposed rule change between the Commission and any person, other than those that may be withheld from the public in accordance with the provisions of 5 U.S.C. 552, will be available for inspection and copying in the Commission's Public Reference Room, 100 F Street, NE., Washington, DC 20549, on official business days between the hours of 10 a.m. and 3 p.m. Copies of such filing also will be available for inspection and copying at the principal office of the Amex. All comments received will be posted without change; the Commission does not edit personal identifying information from submissions. You should submit only information that you wish to make publicly available. All submissions should refer to File Number SR–Amex–2008–03 and should be submitted on or before February 13, 2008.

For the Commission, by the Division of Trading and Markets, pursuant to delegated authority.[15]

Florence E. Harmon,

Deputy Secretary.

[FR Doc. E8–1054 Filed 1–22–08; 8:45 am]

BILLING CODE 8011–01–P

[15] 17 CFR 200.30–3(a)(12).

SECURITIES AND EXCHANGE COMMISSION

[Release No. 34–57157; File No. SR–BSE–2006–16]

Self-Regulatory Organizations; Boston Stock Exchange, Inc.; Notice of Filing of Amendment No. 3 to the Proposed Rule Change and Order Granting Accelerated Approval of Proposed Rule Change, as Modified by Amendments No. 1 and 3 Thereto, To Adopt a Universal Price Improvement Period for Public Customer Orders

January 15, 2008.

I. Introduction

On December 11, 2006, the Boston Stock Exchange, Inc. (''BSE'' or ''Exchange'') filed with the Securities and Exchange Commission (''Commission''), pursuant to section 19(b)(1) of the Securities Exchange Act of 1934 (''Act'')[1] and Rule 19b–4 thereunder,[2] a proposal to amend the rules of the Boston Options Exchange (''BOX'') to adopt a Universal Price Improvement Period (''UPIP''), an auction that offers the opportunity for price improvement for eligible Public Customer orders. On February 1, 2007, BSE filed Amendment No. 1 to the proposed rule change. The proposed rule change, as amended, was published for comment in the **Federal Register** on February 9, 2007.[3] The Commission received three comment letters regarding the proposal.[4] BSE filed Amendment No. 2 to the proposed rule change and a response to the comment letters on November 19, 2007.[5] On December 13, 2007, BSE withdrew Amendment No. 2 and filed Amendment No. 3 to the proposed rule change. The Commission is publishing this notice to solicit comments on the proposed rule change, as amended, from interested persons and is simultaneously approving the proposed

[1] 15 U.S.C. 78s(b)(1).

[2] 17 CFR 240.19b–4.

[3] *See* Securities Exchange Act Release No. 55230 (February 2, 2007), 72 FR 6302 (''Notice'').

[4] *See* letter from Michael T. Bickford, Senior Vice President, American Stock Exchange LLC (''Amex''), to Nancy M. Morris, Secretary, Commission, dated March 2, 2007 (''Amex Letter''); letter from Michael J. Simon, Secretary, International Securities Exchange, LLC (''ISE''), to Nancy M. Morris, Secretary, Commission, dated March 5, 2007 (''ISE Letter''); and letter from Matthew B. Hinerfeld, Managing Director and Deputy General Counsel, Citadel Investment Group, L.L.C. (''Citadel''), to Nancy Morris, Secretary, Commission, dated March 6, 2007 (''Citadel Letter'').

[5] *See* letter to Nancy M. Morris, Secretary, Commission, from John Katovich, Chief Legal Officer, BSE, dated November 19, 2007 (''BSE Letter'').

rule change, as modified by Amendments No. 1 and 3, on an accelerated basis.

II. Description of the Proposal

A. UPIP Eligibility

BOX will automatically initiate a UPIP auction for Public Customer orders [6] (''Eligible Orders'') provided certain conditions have been satisfied.[7] For example, the Eligible Order must be a Limit, Market, or BOX-Top Order that is marketable against the National Best Bid or Offer (''NBBO'').[8] Further, a Price Improvement Period (''PIP'') auction or UPIP auction in the same series cannot already be underway and, if the NBBO is locked or crossed, the BOX Best Bid or Offer (''BBO'') on the same side of the market as the Eligible Order must not equal the NBBO.

B. The UPIP Auction

The UPIP will be three seconds or less, as determined by BOX on a class-by-class basis.[9] BOX will inform Options Participants as to the duration of the UPIP auctions by publishing a Regulatory Circular. Upon initiation of a UPIP auction, the Box Trading Host will transmit a broadcast message (''Broadcast Message'') to Options Participants informing them of the auction's initiation, the relevant details of the UPIP Order [10] (*i.e.*, the UPIP Order's series, size, and side of the market), the end time of the auction, and the applicable Start Price.[11] The Start Price will be one improvement increment (*e.g.*, a penny) better than the NBBO if the BBO is equal to the NBBO. If the BBO does not equal the NBBO, the Start Price will be the NBBO. The same conditions apply with respect to the Start Price whether or not the NBBO is locked or crossed.

UPIP Orders can be modified and cancelled at any time prior to the conclusion of the UPIP auction. The cancellation of a UPIP Order will result in the subsequent cancellation of all related Improvement Orders and the UPIP auction.[12] Certain modifications of a UPIP Order will not result in the termination of the UPIP auction.[13]

The UPIP Order will be ''stopped'' against any quote(s) or order(s) on the BOX Book that is marketable against the UPIP Order at the time the UPIP Order is received by the Trading Host (''Initial BOX Book Quote'') up to the aggregate size of the Initial Box Book Quote (''Initial Aggregate Quote Size'').[14]

A modification or cancellation of the Initial BOX Book Quote during the UPIP auction that would decrease the Initial Aggregate Quote Size below the size of the UPIP Order, at the commencement of the UPIP auction, will cause the UPIP auction to immediately terminate. Such modification or cancellation will only be processed after the UPIP Order has been executed. An Options Participant who is part of the Initial Box Book Quote, and whose cancellation or modification of its order or quote causes the UPIP auction to terminate, will have its order or quote placed at the end of the quote and order queue at the applicable price level on the BOX Book. Any modification or cancellation of the Initial BOX Book Quote that does not cause the Initial Aggregate Quote Size to decrease below the size of the UPIP Order, however, will be processed immediately by the Trading Host without penalty and the UPIP auction will continue.[15]

C. Improvement Orders

Any Options Participant may submit an Improvement Order in response to a Broadcast Message for an impending UPIP auction.[16] Improvement Orders will be visible to all Options Participants, can be submitted in increments of one cent, and must equal or improve the Start Price. Improvement Orders may be cancelled or modified by the Options Participant prior to the conclusion of the UPIP auction. An increase in the quantity of the Improvement Order or modification of the Improvement Order's limit price will result in the creation of a new Improvement Order reflecting the revised terms and the cancellation of the original Improvement Order. At the conclusion of a UPIP auction, the unexecuted portion of an Improvement Order will be cancelled by the Trading Host.[17]

1. Proprietary Improvement Orders

An Options Participant who submits an Eligible Order to BOX, which order starts a UPIP, and subsequently submits a Proprietary Improvement Order will be last in time priority at all price levels in the relevant UPIP auction. However, if the Proprietary Improvement Order is generated by an automated quotation system that operates independently from the existence or non-existence of the pending Eligible Order prior to its submission to BOX, the Options Participant's Proprietary Improvement Order will be treated like an ordinary Improvement Order and qualify for execution at each price level without prejudice.[18]

UPIP will default any Proprietary Improvement Order to the end of the priority queue in the UPIP.[19] If an Options Participant desires to have its status in the queue changed and be exempted from the rule, then the Options Participant would need to affirmatively identify its orders from an automated quotation system as the Exchange deems necessary.[20]

---

[6] ''Public Customer'' means a person that is not a broker or dealer in securities. *See* Section 1(a)(50), Chapter I of the BOX Rules.

[7] *See* proposed Section 29(e), Chapter V of the BOX Rules.

[8] An Eligible Order also must be for a series of options that is open for trading and cannot indicate a minimum quantity condition or be an Inbound Inter-Market Linkage P/A order. *See* proposed Section 29(e)(v), Chapter V of the BOX Rules. In Amendment No. 3, the Exchange clarified that a ''Fill and Kill'' order is not included in the definition of an Eligible Order. *See* proposed Section 29(e)(vi), Chapter V of the BOX Rules.

[9] The Exchange clarified in Amendment No. 3 that the UPIP auction shall be permitted on a class-by-class basis. *See* proposed Section 29(f), Chapter V of the BOX Rules. Amendment No. 3 also amends proposed Section 29(g), Chapter V of the BOX Rules to provide that if a UPIP Order was previously processed as a Directed Order accompanied by a Guaranteed Directed Order (''GDO'') pursuant to Chapter VI, Section 5(c)(iii)(2) of BOX Rules, the duration of the UPIP will not be less than the time the GDO is required to be withheld from trading with the Directed Order as provided in Chapter VI, Section 5(c)(iii)(2)(b)(4) of the BOX Rules. *See* proposed Section 29(g), Chapter V of the BOX Rules.

[10] Upon commencement of the UPIP auction the ''Eligible Order'' is referred to as the ''UPIP Order.''

[11] The Start Price is defined as the minimum/maximum (buy/sell) price at which an Improvement Order must be submitted. *See* proposed Section 29(h), Chapter V of the BOX Rules.

[12] In Amendment No. 3, the Exchange clarified that the cancellation of a UPIP Order will result in the cancellation of the related Improvement Orders *and* the UPIP auction itself.

[13] Such modifications are: The reduction of a UPIP Order quantity; the recharacterization of the UPIP Order type from a Limit Order to a BOX Top or Market Order; and an improvement of the UPIP Order's original limit price. Any other modification will result in the termination of the UPIP auction. *See* proposed Section 29(n), Chapter V of the BOX Rules.

[14] The Initial BOX Book Quote is defined as the quote(s) and/or order(s) on the BOX Book at the best price, on the opposite side, and in the same series as the Eligible Order at the time the Trading Host receives it. The Initial Aggregate Quote Size is defined as the aggregate size of the Initial BOX Book Quote. *See* proposed Section 29(o), Chapter V of the BOX Rules.

[15] Any orders or quotes on the opposite side of the UPIP Order that are received by the BOX Book after the UPIP auction has commenced (*i.e.*, orders that are not otherwise part of the Initial BOX Book Quote) may be cancelled or modified without causing the UPIP auction to terminate. *See* proposed Section 29(o), Chapter V of the BOX Rules.

[16] Improvement Orders are those orders submitted to a UPIP auction in response to a Broadcast Message by Options Participants that are on the opposite side of the market as the UPIP Order. *See* proposed Section 29(j), Chapter V of the BOX Rules.

[17] *See* Amendment No. 3.

[18] *See* proposed Section 29(k), Chapter V of the BOX Rules.

[19] *See* BSE Letter, *supra* note 5, at 7.

[20] *Id.*

2. Executing Participant Improvement Orders

An Executing Participant is a Market Maker that systemically indicates its willingness to accept and receive Directed Orders.[21] An Executing Participant that receives a Directed Order that is released to the BOX Book will be last in priority at all price levels for any Improvement Order or quote submitted to a subsequent UPIP auction related to that Directed Order.[22] Time priority will prevail between a Proprietary Improvement Order and an Improvement Order submitted by an Executing Participant.[23]

In Amendment No. 3, BSE addressed the instance in which a Directed Order with an attached GDO has been entered into the UPIP auction and the UPIP auction is prematurely terminated because of a modification to or cancellation of an order or quote that is a component of the Initial BOX Book Quote or the receipt of a same side, executable order. When a UPIP auction is prematurely terminated in such circumstances, subsequent to the execution of the UPIP Order pursuant to Chapter V, section 29(p) of the BOX Rules, the GDO will be permitted to immediately execute directly against the remaining size of the UPIP Order.[24] This means that a GDO will be permitted to execute against the remaining size of the UPIP Order prior to three seconds having elapsed, but only if there is no other interest on BOX at the same (or better) price as the GDO.[25] It will be considered conduct inconsistent with just and equitable principles of trade for an Executing Participant to directly or indirectly enter, modify or cancel quotes or orders on BOX for the purpose of disrupting, prematurely terminating or manipulating any Improvement Auction, including a UPIP auction.[26]

3. Customer Price Improvement Orders (''CPOs'')

Similar to the CPO in the PIP, OFPs may provide Public Customers with access to the UPIP auction through a CPO, provided certain conditions have been met. The CPO must indicate the price at which the order will be placed in the BOX Book (''BOX Book Reference Price'') as well as the price at which the Public Customer would like to participate in any UPIP that may occur while the order is on the BOX Book (''CPO Auction Reference Price'').[27] Further, the terms of the CPO shall include the size of the order. In order for the CPO to be eligible for participation in a UPIP auction, the BOX Book Reference Price must equal the BBO at the commencement of a UPIP auction.[28] The CPO may also benefit from enhanced time priority pursuant to NBBO Prime.

4. NBBO Prime

An Improvement Order or multiple Improvement Orders may be designated as NBBO Prime (''NBBO Prime Order'') in a particular UPIP auction. The NBBO Prime designation is only applicable for a UPIP auction, not the PIP, and generally confers time priority to a particular Improvement Order over other Improvement Orders and Unrelated Orders with the same price.[29] Any Improvement Order may be eligible for the NBBO Prime designation in a UPIP auction.

In order to be designated as NBBO Prime, the same beneficial account[30] for whom the Options Participant is submitting the NBBO Prime Order must have quotes or orders on the BOX Book that are on the opposite side of the UPIP Order (''NBBO Prime Participant Quote''). The NBBO Prime Participant Quote must be equal to the NBBO and must have been on the BOX Book prior to the time the Eligible Order was presented to the Trading Host. An NBBO Prime Order will only have enhanced time priority for size of its NBBO Prime Participant Quote. Any residual quantity of the NBBO Prime Order will be handled in accordance with the normal time priority rules. Priority among NBBO Prime Orders at the same price will be based on the relevant Trading Host order receipt time stamp of each NBBO Prime Participant Quote. NBBO Prime Orders retain their priority even if the NBBO Prime Participant's Quote is subsequently modified or cancelled during the relevant UPIP auction.

An Options Participant seeking priority through the NBBO Prime designation must indicate to the Trading Host the order number of the NBBO Prime Participant Quote when the Options Participant submits the Improvement Order for the same beneficial account. In addition, the Options Participant may indicate whether the NBBO Prime Participant Quote size should be decremented to reflect any execution of the NBBO Prime Order. In the absence of such an indication, the Trading Host will not decrement the NBBO Prime Participant Quote. Market Makers will not be required to identify their relevant order number but will need to indicate to the Trading Host that their applicable NBBO Prime Participation Quote size should be decremented; otherwise their NBBO Prime Participation Quote size will remain unchanged on the BOX Book.[31]

D. Execution in the UPIP

At the conclusion of the UPIP auction, including in the event of a premature termination, the UPIP Order will be matched against the best prevailing orders (including Improvement Orders, CPOs, and Unrelated Orders) and quotes (including the Initial Box Book Quote) submitted during the UPIP auction that are equal to or better than the Start Price, in accordance with the price/time algorithm in section 16(a) of Chapter V, with the following exceptions to time priority: (1) As provided in proposed paragraphs (k), (l), and (o) of section 29, Chapter V, regarding Proprietary Improvement Orders and Improvement Orders submitted by Executing Participants;[32] and (2) as provided in proposed paragraphs (b) to (d) of section 30, Chapter V, regarding NBBO Prime Orders.[33] Further, in no circumstances will an order for a non-market maker broker-dealer account of an Options Participant be executed ahead of a Public Customer order(s) or a non-BOX Options Participant broker-dealer order(s) at the same price within the UPIP auction. This means that no order for the account of a non-market maker Options Participant will be executed

[21] *See* Section 5(c)(i), Chapter VI of the BOX Rules.

[22] *See* proposed Section 29(l), Chapter V of the BOX Rules.

[23] *See* Amendment No. 3 and proposed Sections 29(o)(i) and 29(s)(ii) of the Box Rules.

[24] *See* proposed Section 5(c)(iii)(2)(b)(4), Chapter VI of the BOX Rules and Amendment No. 3.

[25] *See* telephone conference among William Easley, Vice Chairman, BOX; Lisa Fall, General Counsel, BOX; Wayne Pestone, Bingham McCutchen LLP; and Heather Seidel, Assistant Director, Division of Trading and Markets (''Division''), Commission, on January 11, 2008.

[26] *See* proposed Section 5(c)(iii)(2)(b)(4), Chapter VI of the BOX Rules and Amendment No. 3.

[27] The BOX Book reference price must be stated in standard five-cent or ten-cent increments, and the CPO Auction Reference Price must be stated in one-cent increments. *See* proposed Section 29(m)(i), Chapter V of the BOX Rules.

[28] A CPO must be in the same series and on opposite side of the UPIP Order. *See* proposed Section 29(m)(iii), (iv), Chapter V of the BOX Rules.

[29] *See* proposed Section 30, Chapter V of the BOX Rules.

[30] For purposes of NBBO Prime, a ''beneficial account'' means the underlying type of account (*e.g.,* customer, broker-dealer, market maker, etc.) on whose behalf the Participant is trading. *See* Notice, *supra* note 3, at note 14.

[31] *See* proposed Section 29(j)(iv), Chapter V of the BOX Rules.

[32] *See supra* notes 18 through 23 and accompanying text.

[33] *See* proposed Section 29(p), Chapter V of the BOX Rules. *See also* Amendment No. 3, which clarifies these exceptions in proposed Section 29(p), Chapter V, the substance of which were discussed in the Notice, *supra* note 3.

ahead of the order(s) of any Public Customers or non-members of BOX.[34]

At the conclusion of the UPIP auction, the UPIP Order will be filtered to prevent a trade-through of the NBBO at the conclusion of the auction and will not execute against orders or quotes at prices inferior to the NBBO except in the following circumstances: (1) In accordance with Chapter XII, section 3(e) of BOX Rules;[35] or (2) the away options exchange posting the NBBO is conducting a trading rotation in that options class.[36] If the UPIP Order cannot be executed on BOX at or better than the NBBO, it will be routed to another market center(s) posting the NBBO.

Any unexecuted portion of the UPIP Order not executed in the UPIP auction will be released to the Box Book and handled as provided in section 16, Chapter V of the BOX Rules, except that a quote or order on the BOX Book that is for the same beneficial account as an Improvement Order that executed against the UPIP Order in the UPIP auction and that was on the BOX Book before the UPIP Order was received by BOX will have time priority over other quotes and orders on the BOX Book (except customer orders).[37]

E. Treatment of Unrelated Orders in the UPIP

Unrelated Orders that are submitted to the Trading Host during a UPIP auction that are on the opposite side of the market from a UPIP Order and are executable against the NBBO will be executed immediately against the UPIP Order at the mid-point of the (i) NBBO and (ii) the best of the UPIP Improvement Order, the UPIP Start Price or the NBBO.[38] If the Unrelated Order on the opposite side of the market as the UPIP Order has a quantity equal to or greater than the UPIP Order, the UPIP auction will terminate. Otherwise, the immediate execution of the Unrelated Order against the UPIP Order will not cause the termination of the UPIP auction and the auction will continue. Conversely, an Unrelated Order that is on the same side of the market as the UPIP Order that is executable against the NBBO will cause the UPIP to immediately terminate and the UPIP Order will be executed pursuant to proposed section 29(p) of Chapter V of the BOX Rules.[39]

In Amendment No. 3, BSE amended paragraph (s) of section 29, Chapter V of the BOX Rules to emphasize that it will be considered conduct inconsistent with just and equitable principles of trade for any Options Participant to enter Unrelated Orders into BOX for the purpose of disrupting or manipulating any UPIP auction, including purposely causing premature termination.[40]

III. Solicitation of Comments

Interested persons are invited to submit written data, views, and arguments concerning the foregoing, including whether the proposed rule change, as amended, is consistent with the Act. Comments may be submitted by any of the following methods:

Electronic Comments

- Use the Commission's Internet comment form (*http://www.sec.gov/rules/sro.shtml*); or
- Send an e-mail to *rule-comments@sec.gov.* Please include File Number SR–BSE–2006–16 on the subject line.

Paper Comments

- Send paper comments in triplicate to Nancy M. Morris, Secretary, Securities and Exchange Commission, 100 F Street, NE., Washington, DC 20549–1090.

All submissions should refer to File Number BSE–2006–16. This file number should be included on the subject line if e-mail is used. To help the Commission process and review your comments more efficiently, please use only one method. The Commission will post all comments on the Commission's Internet Web site (*http://www.sec.gov/rules/sro.shtml*). Copies of the submission, all subsequent amendments, all written statements with respect to the proposed rule change that are filed with the Commission, and all written communications relating to the proposed rule change between the Commission and any person, other than those that may be withheld from the public in accordance with the provisions of 5 U.S.C. 552, will be available for inspection and copying in the Commission's Public Reference Room, 100 F Street, NE., Washington, DC 20549, on official business days between the hours of 10 a.m. and 3 p.m. Copies of such filing also will be available for inspection and copying at the principal office of BSE. All comments received will be posted without change; the Commission does not edit personal identifying information from submissions. You should submit only information that you wish to make available publicly. All submissions should refer to File Number SR–BSE–2006–16 and should be submitted on or before February 13, 2008.

IV. Discussion

After careful consideration of the amended proposal and the comment letters, the Commission finds that the proposed rule change is consistent with the requirements of the Act and the rules and regulations thereunder applicable to a national securities exchange[41] and, in particular, the requirements of section 6 of the Act.[42] Specifically, the Commission finds that the proposed rule change is consistent with section 6(b)(5) of the Act,[43] which requires, among other things, that the rules of a national securities exchange be designed to prevent fraudulent and manipulative acts and practices, to promote just and equitable principles of trade, to remove impediments to and perfect the mechanism of a free and open market and a national market system, and, in general, to protect investors and the public interest. Significant aspects of the proposal are discussed below.

The Commission notes that the UPIP is similar to BOX's existing price improvement auction, the PIP, and other price improvement mechanisms, such as the Price Improvement Mechanism (''PIM'') of the ISE, that initiate auctions in penny increments through which exchange participants compete to potentially price improve a customer order. However, unlike the PIP, in the UPIP customer orders do not depend on

[34] *See* proposed Section 29(p), Chapter V of the BOX Rules and Amendment No. 3.

[35] Chapter XII, Section 3(e) of the BOX Rules states that ''[u]nder circumstances where the Options Official determines that quotes from one or more particular away markets in one or more classes of options are not reliable, the Options Official may direct the Market Operations Center ('MOC') to exclude the unreliable quotes from the determination of the NBBO in the particular class(es).''

[36] The original filing provided that only the quantity of the UPIP Order that exceeded the Initial Aggregate Quote Size was filtered at the conclusion of the UPIP auction. The Exchange modified the rule text in Amendment No. 3 to apply the NBBO trade-through filter to the entire size of the UPIP Order.

[37] *See* proposed Section 16(a)(iv), Chapter V of the BOX Rules. In Amendment No. 3, BSE clarified that such order on the BOX Book will receive only *time* priority. *See* Amendment No. 3.

[38] *See* proposed Section 29(s)(i), Chapter V of the BOX Rules. Any rounding required will be to the benefit of the Unrelated Order. *Id.*

[39] If the Unrelated Order is still UPIP eligible, a new UPIP will commence. If the Unrelated Order is no longer UPIP eligible, the order will go on the BOX Book. *See* telephone conference among William Easley, Vice Chairman, BOX; Lisa Fall, General Counsel, BOX; and Heather Seidel, Division, Commission, on December 21, 2007.

[40] *See* Amendment No. 3.

[41] In approving this proposed rule change, the Commission has considered the proposed rule's impact on efficiency, competition, and capital formation. 15 U.S.C. 78c(f).

[42] 15 U.S.C. 78f.

[43] 15 U.S.C. 78f(b)(5).

the ability of at least one party to guarantee price improvement for the full size of the Customer Order.[44]

A. Price Competition

One commenter believes that the UPIP auction would encourage Market Makers to post wide and shallow quotes and discourage Market Makers from quoting aggressively until the UPIP auction begins because: (1) The most desirable orders will bypass the centralized auction; (2) after a UPIP auction is completed, the centralized auction will be exposed to UPIP ''rejects;'' and (3) the UPIP Order can be cancelled or modified but orders on the top of the BOX Book when the auction starts cannot.[45] This commenter also believes that transparency will suffer because market participants will hide their true trading interest until a UPIP auction begins.[46]

Another commenter believes that the ability of a Participant to modify or cancel a UPIP Order, while the quotes and orders on the top of the BOX Book will essentially be frozen, will provide a three-second option or ''second-look'' opportunity for the Participant that submitted the UPIP Order to the detriment of the quotes and orders at the top of the book.[47] The commenter believes that this could severely limit the amount of liquidity Market Makers would be willing to provide on BOX. This commenter further believes that the dissemination of Improvement Orders during the UPIP auction, which allows the Participant that entered the UPIP Order to monitor the amount of price improvement being offered (if any), compounds the ''second look'' problem.[48] This commenter also believes that this inability to cancel or modify an order at the top of the BOX Book raises customer protection issues, and that customers and their brokers should be made aware that cancelling or modifying their orders on the BOX Book may actually cause them to be executed at an undesirable price.[49]

In response, BSE notes that in general BOX Market Makers have several meaningful incentives to consistently quote at or establish the NBBO, including: (1) An open and competing market maker structure with no specialist/designated primary market maker and no regulatory limits to the number of market makers appointed in a given class; (2) low costs to enter the market; (3) low transaction costs; (4) price and time priority on the BOX Book; and (5) anonymous trading on the BOX Book.[50] Further, BSE notes that the UPIP rules allow certain Improvement Order to be designated as NBBO Prime Orders. An NBBO Prime designation confers time priority in a UPIP auction to a particular Improvement Order over other Improvement Orders and Unrelated Orders with the same price upon satisfaction of certain conditions. To be eligible to be designated NBBO Prime, the same beneficial account for whom the Options Participant is acting and that is seeking the NBBO Prime designation must have had a quote or order on the BOX Book on the opposite side of the UPIP Order equal to the NBBO prior to receipt of the UPIP Order by the Trading Host. BSE believes that this requirement will encourage all Options Participants to compete aggressively to match or establish a new NBBO.[51]

The Commission does not believe that, given the overall structure of BOX and the NBBO Prime functionality, the UPIP auction will discourage aggressive quoting on BOX. The availability of the NBBO Prime functionality is designed to encourage market makers and other market participants to aggressively post quotes or limit orders on the BOX Book, to be the first to match the NBBO, or to establish a new NBBO, because those participants will have time priority in the UPIP auction. Further, because NBBO Prime Orders only receive enhanced time priority for the quantity that does not exceed the size of the related order that was on the BOX Book, market participants may be incented to post greater size in order to receive priority on a larger allocation. Finally, with regard to BSE's proposal to allow Public Customers to cancel UPIP Orders, BSE states that, because the UPIP does not guarantee price improvement, the ability to cancel a UPIP Order is necessary to allow an OFP to manage an order that has not been executed and for which no trade confirmation has been issued.[52] The Commission believes that the ability for UPIP Orders to be cancelled is consistent with the Act.

B. NBBO Prime Requirements

One commenter doubts the technological feasibility of the NBBO Prime functionality because firms seeking NBBO Prime status will be required to specify the number of their order on the BOX Book that was first in time priority at the top of the BOX Book.[53] BSE represents that the requirement to provide the unique order identifier to BOX for the appropriate order on the BOX Book utilizes the same technology that firms currently use to cancel or modify orders on BOX and that an OFP cannot be certified to trade on BOX unless it can perform this task.[54] The Commission therefore does not believe this requirement should place an unreasonable burden on Options Participants to be able to avail themselves of the NBBO Prime functionality.

C. ''Freezing'' Top of the Book Quotes and Orders

As noted above, two commenters expressed concerns about BSE's proposal to prohibit orders and quotes at the top of the BOX Book at the commencement of a UPIP auction to be cancelled.[55] In response, BSE stated that ''freezing'' certain quotes and orders on the BOX Book at the start of a UPIP auction is necessary to comply with the Quote Rule,[56] and disagrees that quotes or orders on the BOX Book held firm in this manner will be disadvantaged. BSE believes such orders and quotes will be treated as the entering participant intends—*i.e.*, executable at the limit price when matched with a contra-side order and cancellable only when there is no pending execution.

Rule 602 under the Act requires a responsible broker or dealer to execute orders to buy or sell a security presented to it by another broker or dealer, or any other person belonging to a category of persons with whom such responsible broker or dealer customarily deals, at a price at least as favorable to such buyer or seller as the responsible broker's or dealer's published bid or published offer in any amount up to its published

[44] The Commission notes that the Simple Auction Liaison System of the Chicago Board Options Exchange, Incorporated (''CBOE''), which provides for the automatic initiation of an auction process in certain circumstances for any order that is eligible for automatic execution by the Hybrid System, also does not depend on a contra-side order. *See* Securities Exchange Act Release No. 54229 (July 27, 2006), 71 FR 44058 (August 3, 2006) (SR–CBOE–2005–90).

[45] *See* Citadel Letter, *supra* note 4, at 1 to 2 and 4.

[46] *Id.* at 4.

[47] *See* ISE Letter, *supra* note 4, at 1 to 2. *See also* Citadel Letter, *supra* note 4, at 4 (stating that the ability of the UPIP Order to cancel will give investors a free option to cancel their orders based on intervening market movements, while orders at the top of the book are frozen).

[48] *See* ISE Letter, *supra* note 4, at 2–3.

[49] Id. at 1 to 2.

[50] *See* BSE Letter, *supra* note 5, at 2.

[51] *Id.* NBBO Prime is similar to the ''Market Maker Prime'' (''MMP'') designation in a PIP auction that is awarded to a Market Maker that is first to establish a quote on BOX equal to the NBBO or establish a new NBBO.

[52] *See* BSE Letter, *supra* note 5, at 4.

[53] *See* Citadel Letter, *supra* note 4, at note 12.

[54] *See* BSE Letter, *supra* note 5, at note 10.

[55] *See supra* note 47 and accompanying text.

[56] 17 CFR 242.602.

quotation size.[57] Therefore, the Commission agrees that the ''stop'' feature is necessary to ensure market participants' compliance with Rule 602 under the Act and believes that it is consistent with the Act. The Commission notes, however, that BOX Participants should, as with any order type or exchange functionality, take steps necessary to ensure their customers understand the operation of the UPIP auction with respect to incoming orders and orders resting on the BOX Book.

D. Private Auctions

One commenter argues that, because the broadcast message commencing a UPIP auction and the responding Improvement Orders will only be accessible to BOX participants and will not be publicly disseminated, only BOX Participants will know the ''true'' BOX market.[58]

Under the Commission's Quote Rule, an exchange is required to collect, process, and make available to quotation vendors the best bid, the best offer, and aggregate quotation sizes for each subject security listed or admitted to unlisted trading privileges which is communicated on any national securities exchange by any responsible broker or dealer.[59] The Commission believes that because the UPIP auction is at most only 3 seconds in length, it is analogous to the open outcry auctions conducted on floor-based exchanges, where auction prices are not widely disseminated and are available only for the order that initiated the auction and other orders in the crowd at that particular time.[60] Accordingly, the Commission finds the UPIP auction to be consistent with the Quote Rule.

One commenter notes that unlike the PIP, the proposed UPIP auction does not require at least three market makers to quote in an options series before a UPIP may be initiated.[61] The Commission does not believe that the Act requires an exchange to have market makers in an auction. Although Market Makers could be an important source of liquidity in the UPIP auction, they likely will not be the only source. Any Options Participant can submit an Improvement Order in a UPIP Auction, on its own behalf or on behalf of a customer. Further, the Auto Auction Order (''AAO'')[62] and CPO are specifically designed to allow customers to more easily participate in an Improvement Auction, including the UPIP. The Commission therefore believes that the proposal not to require minimum market maker participation in the UPIP is consistent with the Act.

Another commenter notes that the proposal provides that the duration of the UPIP will be 3 seconds or less as determined by the Board on a case-by-case basis and questions whether a UPIP duration of less than 3 seconds would result in a meaningful auction.[63] This commenter also inquires how Options Participants will be informed about the exposure time of UPIP auctions if they are reduced. The Commission believes that BSE's response that BOX will inform Options Participants regarding the duration of the UPIP auctions by publishing a Regulatory Circular is consistent with the Act.[64] The Commission also notes that the UPIP auction is designed to provide an opportunity for price improvement for certain orders, without a guarantee to a facilitating firm. Thus, the Commission does not believe that the UPIP auction raises the same potential conflict concerns as an auction where there is a guarantee from a facilitating firm. The Commission therefore believes that the duration of the UPIP auction, as proposed, is consistent with the Act.

E. NBBO Protection

A commenter requested clarification as to what would occur in a UPIP auction if the BBO does not equal the NBBO and there are no Improvement Orders entered during the UPIP auction. Specifically, this commenter asked if the UPIP Order would be executed at the NBBO, or if the UPIP Order would be routed through the Options Intermarket Linkage to a better away market.[65] This commenter further asked at what price the UPIP Order is executed if the NBBO changes during the UPIP auction.[66] Similarly, another commenter noted that the UPIP Order would not execute against a better price if the NBBO changes during the UPIP Auction.[67]

BSE responded that the UPIP Order is not guaranteed an execution at the NBBO.[68] At the conclusion of the UPIP auction, the UPIP Order will be matched against the best prevailing orders or quotes, whether Improvement Orders, Unrelated Orders, or the Initial BOX Book Quote, that are equal to or better than the Start Price, which is at least as good a price as the NBBO at the commencement of the auction.[69] In addition, at the conclusion of the UPIP auction the entire UPIP Order will be filtered to prevent BOX from executing any portion of the UPIP Order at a price inferior to the NBBO at the end of the UPIP auction. If the UPIP Order cannot be executed on BOX at or better than the NBBO, then the UPIP Order will be routed through Intermarket Linkage to another market displaying the NBBO at the conclusion of the UPIP auction.[70] The Commission believes that BSE adequately clarified this aspect of the proposal, as amended, and that it is consistent with the Act.

F. Compliance With the Act

1. Quote Rule

One commenter believes that the ability to cancel Improvement Orders during a UPIP auction is inconsistent with the purpose and intent of BOX's firm quote rule. This commenter argues that an Options Participant would have a free look at the UPIP Order during the auction and could withdraw its Improvement Order if the market moved unfavorably.[71]

The Commission's Quote Rule requires a responsible broker or dealer to execute any order presented to it at its published price and up to the full amount of its published size.[72] Because no order would be presented to execute against an Improvement Order until the end of the UPIP auction, the Commission believes that the ability to cancel an Improvement Order prior to the termination of the UPIP auction does not violate the Quote Rule.

2. Section 11(a) of the Act

Section 11(a) of the Act prohibits a member of a national securities exchange from effecting transactions on that exchange for its own account, the account of an associated person, or an account over which it or its associated person exercises discretion, unless an

[57] *Id.*

[58] *See* Citadel Letter, *supra* note 4, at 4.

[59] 17 CFR 242.602(a)(i).

[60] *See* Securities Exchange Act Release Nos. 49068 (January 14, 2003), 68 FR 3062 (January 22, 2003) (Commission approval establishing trading rules for BOX, including rules for the PIP); 49323 (February 26, 2004), 69 FR 10087 (March 3, 2004) (Commission approval establishing rules for PIM); and 53222 (February 3, 2006), 71 FR 7089 (February 10, 2006) (Commission approval establishing rules for CBOE's Automated Improvement Mechanism (''AIM'')).

[61] *See* ISE Letter, *supra* note 4, at 3.

[62] *See* Securities Exchange Act Release No. 56186 (August 2, 2007), 72 FR 44593 (August 8, 2007) (approving the AAO functionality on BOX).

[63] *See* Amex Letter, *supra* note 4, at 4.

[64] *See* BSE Letter, *supra* note 5, at 6.

[65] *See* Amex Letter, *supra* note 4, at 2.

[66] *Id.*

[67] *See* Citadel Letter, *supra* note 4, at 6.

[68] *See* BSE Letter, *supra* note 5, at 5.

[69] Such matching shall occur in compliance with the priority provisions of proposed Chapter V, Section 29(p) of the BOX Rules.

[70] *See* BSE Letter, *supra* note 5, at 5 and Chapter V, Section 29(q) of the BOX Rules.

[71] *See* Amex Letter, *supra* note 4, at 3.

[72] 17 CFR 242.602(b)(2).

exception applies.[73] Section 11(a)(1)(G) and Rule 11a1–1(T) under the Act provide an exception to the general prohibition in section 11(a) on an exchange member effecting transactions for its own account. Specifically, a member that ''is primarily engaged in the business of underwriting and distributing securities by other persons, selling securities to customer, and acting as broker, or any one or more of such activities, and whose gross income normally is derived principally from such business and related activities'' [74] and effects a transaction in compliance with the requirements in Rule 11a1–1(T)(a) [75] may effect a transaction for its own account. Among other things, Rule 11a1–1(T)(a)(3) requires that an exchange member presenting a bid or offer for its own account or the account of another member shall grant priority to any bid or offer at the same price for the account of a non-member of the exchange.[76]

BSE's proposal provides that ''no order for a non-market maker broker-dealer account of an Options Participant will be executed before Public Customer order(s) and non-BOX Options Participant broker-dealer order(s) at the same price.'' [77] Because BSE's proposed rules will require Options Participants that are not Market Makers to yield priority in the UPIP auction to all non-member orders,[78] the Commission believes that the proposal is consistent with the yielding requirements in section 11(a)(1)(G) and Rule 11a1–1(T) under the Act. However, the Commission notes that, in addition to yielding priority to non-member orders at the same price, members also must meet the other requirements under section 11(a)(1)(G) and Rule 11a1–1(T) to effect transactions for their own accounts in reliance on this exception (or satisfy the requirements of another exception).

G. Surveillance

The proposal provides that the UPIP will default any Proprietary Improvement Order to the end of the priority queue in the UPIP unless the Options Participant affirmatively identifies that its order was generated by an automated quotation system that operates independently from the existence or non-existence of a pending UPIP Order. A commenter questioned how the BOX system will differentiate between proprietary orders that have or have not been generated by automated quotation systems, and what standard (if any) will be used for making a determination that a particular system is an automated quotation system.[79] BSE has represented that it will surveil for compliance with this rule through its current examination program.[80] BSE also notes that ISE uses a similar mechanism for its Directed Order process.[81]

H. Interaction Among UPIP and PIP

One commenter asks for more clarity on the interaction of the PIP, UPIP, and directed order functionalities.[82] In response, BSE noted that a PIP or a UPIP auction will not run simultaneously with another PIP or UPIP auction in the same series, nor will PIP or UPIP auctions interact, queue, or overlap in any manner.[83] BSE states that any order that is received while a UPIP is underway for the same series, which would otherwise meet the price conditions to initiate a UPIP auction, will cause the UPIP auction to immediately terminate.[84] Further, any order that is received while a PIP auction is underway, that would otherwise meet the price conditions to initiate a UPIP will interact with the PIP as an Unrelated Order under the PIP rules.[85] Any request to initiate a PIP (including from a market maker that has received a directed order) while a PIP or UPIP is already in progress in the same series will be rejected.[86] The Commission believes that BSE has adequately clarified the interaction among the UPIP, PIP, and directed orders.[87]

One commenter questioned whether the AAO would interact in a UPIP Auction.[88] In response, BSE clarifies that the recently approved AAO will be able to interact in a UPIP.[89]

BSE also notes that the Limit Order that is associated with the AAO that is priced at the standard minimum trading increment of five or ten cents can start a UPIP if, at its rounded price, it would be executable at the NBBO.[90]

I. Penny Pilot

One commenter argues that the Penny Pilot Program [91] initiative should prohibit the approval of the UPIP. This commenter believes that the UPIP will distort Penny Pilot data.[92] Another commenter believes that the Penny Pilot is the appropriate method to approach penny pricing in the options market because it is a fair and transparent environment.[93]

As discussed above, with respect to the commenters' substantive arguments, the Commission believes the proposed rule change is consistent with the Act. The Commission has previously approved exchange proposals to trade in penny increments, including BSE's PIP.[94] The Commission believes it is consistent with the Act to approve the

[73] 15 U.S.C. 78k(a).

[74] 15 U.S.C. 78k(a)(1)(G)(i). Paragraph (b) of Rule 11a1–1(T) under the Act provides that the requirements of Section 11(a)(1)(G)(i) of the Act are met if during its preceding fiscal year more than 50% of the member's gross revenues was derived from one or more of the sources specified in that section. In addition to any revenue which independently meets the requirements of Section 11(a)(1)(G)(i), revenue derived from any transaction specified in paragraph (A), (B), or (D) of Section 11(a)(1) of the Act or specified in Rule 11a1–4(T) shall be deemed to be revenue derived from one or more of the sources specified in Section 11(a)(1)(G)(i).

[75] 15 U.S.C. 78k(a)(1)(G)(ii).

[76] 17 CFR 240.11a1–1(T)(a)(3).

[77] *See* proposed Section 29(p), Chapter V of the BOX Rules.

[78] *See* Amendment No. 3.

[79] *See* Amex Letter, *supra* note 4, at 3 to 4.

[80] *See* BSE Letter, *supra* note 5, at 7.

[81] *Id.*

[82] *See* ISE Letter, *supra* note 4, at 3. For example, this commenter noted that when a market maker receives a directed order on BOX, it must either initiate a PIP or release the order to the market within three seconds. Therefore, if there is a UPIP in progress at the time the directed order is received, the market maker cannot initiate a PIP. *Id.* at note 3.

[83] *See* proposed Section 18, Chapter V, Supplementary Material .02 and proposed Section 29, Chapter V, Supplementary Material .01 of the BOX Rules.

[84] *See* proposed Section 29(s), Chapter V of the BOX Rules.

[85] *See* proposed Chapter V, Section 18(i) of the BOX Rules.

[86] *Id.* and BSE Letter, *supra* note 5, at 6.

[87] Another commenter believes that the Commission should not approve the proposed rule change until it has addressed the issue of whether market makers will be able to unfairly discriminate against certain customers when the UPIP or PIP auctions are used in conjunction with a Directed Order process without anonymity. *See* Amex Letter, *supra* note 4, at 2–3. The Commission believes that the issue of anonymity in the Directed Order process is more appropriately addressed in the context of the BSE proposed rule change on that issue. *See* Securities Exchange Act Release Nos. 56014 (July 5, 2007), 72 FR 38104 (July 12, 2007) (SR–BSE–2007–31) (extending to January 31, 2008 the effective date of Section 5(c)(i), Chapter 6 of the BOX Rules, which allows the BOX Trading Host to identify to an Executing Participant the identity of the firm entering a Directed Order); and 53357 (February 23, 2006), 71 FR 10730 (March 2, 2006) (SR–BSE–2005–52) (notice of proposed rule change to permit Executing Participants to choose the firms from which they will accept Directed Orders while providing complete anonymity for Directed Orders that are passed on to the Executing Participant for possible representation in a PIP auction).

[88] *See* ISE Letter, *supra* note 4, at 3.

[89] *See* BSE Letter, *supra* note 5, at note 26.

[90] *Id.*

[91] The Penny Pilot was approved by the Commission to allow BOX to quote certain options series in pennies on a pilot basis. *See e.g.,* Securities Exchange Act Release No. 55155 (January 23, 2007), 72 FR 4741 (February 1, 2007) (SR–BSE–2006–49).

[92] *See* Citadel Letter, *supra* note 4, at 7.

[93] *See* ISE Letter, *supra* note 4, at 3 to 4.

[94] *See* Securities Exchange Act Release Nos. 49068 (PIP); 49323 (PIM); and 53222 (AIM), *supra* note 60.

BSE's initiative designed to allow trading in penny increments.[95]

J. Acceleration of Proposed Rule Change as Amended

The Commission finds good cause to approve the proposal prior to the thirtieth day after the proposal was published for comment in the **Federal Register**. The proposed rule change, as modified by Amendment No. 1, was published for full notice and comment.[96] The Commission believes that the changes made in Amendment No. 3 generally strengthen the proposal. In Amendment No. 3, BSE made several changes to clarify its rules,[97] respond to commenters,[98] and comply with the requirements of the Act.[99] The Commission believes that it has received and fully considered substantial, meaningful comments with respect to the BSE's proposal, as amended, and that Amendment No. 3 does not raise issues that warrant further delay. For these reasons, the Commission finds good cause, consistent with section 19(b)(2) of the Act,[100] to grant accelerated approval of the proposed rule change, as amended.

V. Conclusion

It is therefore ordered, pursuant to section 19(b)(2) of the Act,[101] that the proposed rule change (SR–BSE–2006–16), as amended, be, and it hereby is, approved on an accelerated basis.

For the Commission, by the Division of Trading and Markets, pursuant to delegated authority.[102]

Florence E. Harmon,

Deputy Secretary.

[FR Doc. E8–1037 Filed 1–22–08; 8:45 am]

BILLING CODE 8011–01–P

[95] The Exchange has represented that it will provide the Commission with statistics regarding the UPIP for those classes included in the Penny Pilot. *See* BSE Letter, *supra* note 5, at 8.

[96] *See* Notice, *supra* note 3.

[97] *See, e.g.,* BSE clarifies that: The definition of an Eligible Order does not include ''fill or kill'' orders; the UPIP auction will only be available for certain classes of options as determined from time-to-time by BOX; the cancellation of the UPIP Order will result in the cancellation of the related Improvement Orders and the UPIP auction itself; any unexecuted portion of an Improvement Order will be cancelled; time priority will prevail between a Proprietary Improvement Order and an Improvement Order submitted by an Executing Participant; and in the instance when a UPIP is concluded, only time priority will be granted to an order on the BOX Book that executes against the remaining portion of a UPIP Order if that order has been placed for the same beneficial account as an Improvement Order in the UPIP auction.

[98] *See, e.g.,* BSE revises the proposal to apply its NBBO trade-through filter at the conclusion of the UPIP auction.

[99] *See, e.g.,* BSE revises the proposal to provide that: In no circumstances will the orders for a non-market maker broker-dealer account of an Options Participant be executed before a Public Customer or non-BOX Options Participant at the same price in the UPIP; and it will be conduct inconsistent with just and equitable principles of trade for (1) any Options Participant to enter Unrelated Orders into BOX for the purpose of disrupting or manipulating any UPIP auction, including purposely causing premature termination or (2) for an Executing Participant to directly or indirectly enter, modify, or cancel quotes or orders on BOX for the purpose of disrupting, prematurely terminating or manipulating any Improvement Auction.

[100] 15 U.S.C. 78s(b)(2).

[101] 15 U.S.C. 78s(b)(2).

[102] 17 CFR 200.30–3(a)(12).

SECURITIES AND EXCHANGE COMMISSION

[Release No. 34–57153; File No. SR–ISE–2008–04]

Self-Regulatory Organizations; International Securities Exchange, LLC; Notice of Filing and Immediate Effectiveness of Proposed Rule Change, as Modified by Amendment No. 1 Thereto, Relating to Fee Waiver

January 15, 2008.

Pursuant to Section 19(b)(1) of the Securities Exchange Act of 1934 (the ''Act''),[1] and Rule 19b–4 thereunder,[2] notice is hereby given that on January 2, 2008, the International Securities Exchange, LLC (''ISE'' or ''Exchange'') filed with the Securities and Exchange Commission (''Commission'') the proposed rule change as described in Items I, II, and III below, which Items have been substantially prepared by ISE. ISE has designated this proposal as one establishing or changing a due, fee, or other charge applicable only to a member under Section 19(b)(3)(A) of the Act,[3] and Rule 19b–4(f)(2) thereunder,[4] which renders the proposal effective upon filing with the Commission. On January 15, 2008, ISE submitted Amendment No. 1 to the proposed rule change.[5] The Commission is publishing this notice to solicit comments on the proposed rule change, as amended, from interested persons.

I. Self-Regulatory Organization's Statement of the Terms of Substance of the Proposed Rule Change

ISE is proposing a one-time waiver of the annual renewal fee for Registered Representatives.

[1] 15 U.S.C. 78s(b)(1).

[2] 17 CFR 240.19b–4.

[3] 15 U.S.C. 78s(b)(3)(A).

[4] 17 CFR 240.19b–4(f)(2).

[5] For purposes of calculating the 60-day period within which the Commission may summarily abrogate the proposed rule change under Section 19(b)(3)(C) of the Act, the Commission considers the period to commence on January 15, 2008, the date on which the Exchange filed Amendment No. 1. *See* 15 U.S.C. 78s(b)(3)(C).

II. Self-Regulatory Organization's Statement of the Purpose of, and Statutory Basis for, the Proposed Rule Change

In its filing with the Commission, the ISE included statements concerning the purpose of, and basis for, the proposed rule change and discussed any comments it received on the proposed rule change. The text of these statements may be examined at the places specified in Item IV below. ISE has prepared summaries, set forth in Sections A, B, and C below, of the most significant aspects of such statements.

A. Self-Regulatory Organization's Statement of the Purpose of, and Statutory Basis for, the Proposed Rule Change

1. Purpose

Pursuant to ISE Rules 601, 602, and 603, members are required to electronically file a Uniform Application for Securities Industry Registration or Transfer (Form U4) with the Web CRD System operated by the Financial Industry Regulatory Authority, Inc. (''FINRA'') when registering, transferring, or terminating a registered person. Pursuant to the Exchange's Schedule of Fees, members pay fees related to these U4 filings, which are collected by FINRA on behalf of the Exchange. In particular, members are assessed an annual renewal fee of $55 for each Registered Representative.

The purpose of this rule filing is to grant a one-time waiver of the $55 annual renewal fee for Registered Representatives for 2008. The Exchange updated its rules regarding its registration requirements in June 2007,[6] which resulted in some members registering a substantial number of representatives with the Exchange for the first time in the later part of 2007.

Specifically, the Exchange initially requested that members comply with the revised registration requirements by no later than October 31, 2007, but subsequently extended this date until January 31, 2008. Because the 2008 annual renewal fee is assessed based on the number of Registered Representatives a member has registered with the ISE on the Web CRD system at the beginning of 2008, any member that registered its representatives prior to the end of 2007 would be assessed the annual renewal fee for each Registered Representative, whereas those firms that waited until after January 1, 2008 to register their representatives would not

[6] *See* Securities Exchange Act Release No. 55899 (June 12, 2007), 72 FR 33794 (June 19, 2007) (SR–ISE–2007–30).

incur the 2008 annual renewal fee. In effect, assessing the 2008 annual renewal fee would penalize those members that complied with the Exchange's registration requirements more timely. The Exchange therefore believes it is appropriate to waive the 2008 annual renewal fee for all members.

2. Statutory Basis

The Exchange believes that the proposed rule change is consistent with the objectives of Section 6 of the Act,[7] in general, and furthers the objectives of Section 6(b)(4) of the Act,[8] in particular, in that it is designed to provide for the equitable allocation of reasonable dues, fees and other charges among its members and other persons using its facilities.

B. Self-Regulatory Organization's Statement on Burden on Competition

The proposed rule change does not impose any burden on competition that is not necessary or appropriate in furtherance of the purposes of the Act.

C. Self-Regulatory Organization's Statement on Comments on the Proposed Rule Change Received From Members, Participants or Others

The Exchange has not solicited, and does not intend to solicit, comments on this proposed rule change. The Exchange has not received any unsolicited written comments from members or other interested parties.

III. Date of Effectiveness of the Proposed Rule Change and Timing for Commission Action

The foregoing rule change has become effective pursuant to Section 19(b)(3)(A) of the Act [9] and Rule 19b–4(f)(2) [10] thereunder because it establishes or changes a due, fee, or other charge imposed by the Exchange. At any time within 60 days of the filing of such proposed rule change, the Commission may summarily abrogate such rule change if it appears to the Commission that such action is necessary or appropriate in the public interest, for the protection of investors, or otherwise in furtherance of the purposes of the Act.

IV. Solicitation of Comments

Interested persons are invited to submit written data, views, and arguments concerning the foregoing, including whether the proposed rule change is consistent with the Act.

[7] 15 U.S.C. 78f(b).

[8] 15 U.S.C. 78f(b)(4).

[9] 15 U.S.C. 78s(b)(3)(A).

[10] 17 CFR 240.19b–4(f)(2).

Comments may be submitted by any of the following methods:

Electronic Comments

- Use the Commission's Internet comment form (*http://www.sec.gov/rules/sro.shtml*); or
- Send an e-mail to *rule-comments@sec.gov*. Please include File No. SR–ISE–2008–04 on the subject line.

Paper Comments

- Send paper comments in triplicate to Nancy M. Morris, Secretary, Securities and Exchange Commission, Station Place, 100 F Street, NE., Washington, DC 20549–1090.

All submissions should refer to File Number SR–ISE–2008–04. This file number should be included on the subject line if e-mail is used. To help the Commission process and review your comments more efficiently, please use only one method. The Commission will post all comments on the Commission's Internet Web site (*http://www.sec.gov/rules/sro.shtml*). Copies of the submission, all subsequent amendments, all written statements with respect to the proposed rule change that are filed with the Commission, and all written communications relating to the proposed rule change between the Commission and any person, other than those that may be withheld from the public in accordance with the provisions of 5 U.S.C. 552, will be available for inspection and copying in the Commission's Public Reference Room on official business days between the hours of 10 a.m. and 3 p.m. Copies of such filing also will be available for inspection and copying at the principal office of the ISE. All comments received will be posted without change; the Commission does not edit personal identifying information from submissions. You should submit only information that you wish to make available publicly. All submissions should refer to File Number SR–ISE–2008–04 and should be submitted on or before February 12, 2008.

For the Commission, by the Division of Trading and Markets, pursuant to delegated authority.[11]

Florence E. Harmon,

Deputy Secretary.

[FR Doc. E8–1011 Filed 1–22–08; 8:45 am]

BILLING CODE 8011–01–P

[11] 17 CFR 200.30–3(a)(12).

SECURITIES AND EXCHANGE COMMISSION

[Release No. 34–57156; File No. SR–NYSE–2007–120]

Self-Regulatory Organizations; New York Stock Exchange LLC; Notice of Filing and Immediate Effectiveness of Proposed Rule Change To Amend NYSE Rules 13, 60, and 1000 To Allow for the Automatic Execution of G-Quotes in the Display Book

January 15, 2008.

Pursuant to Section 19(b)(1) of the Securities Exchange Act of 1934 (the ''Act''),[1] and Rule 19b–4 thereunder,[2] notice is hereby given that on December 24, 2007, the New York Stock Exchange LLC (''NYSE'' or ''Exchange'') filed with the Securities and Exchange Commission (''Commission'') the proposed rule change as described in Items I, II, and III below, which Items have been substantially prepared by the NYSE. The proposed rule change has been filed by the NYSE as effecting a change in an existing order-entry or trading system pursuant to Section 19(b)(3)(A) of the Act,[3] and Rule 19b–4(f)(5) thereunder,[4] which renders the proposal effective upon filing with the Commission. The Commission is publishing this notice to solicit comments on the proposed rule change from interested persons.

I. Self-Regulatory Organization's Statement of the Terms of Substance of the Proposed Rule Change

The NYSE proposes to amend NYSE Rules 13 and 1000 to allow for the automatic execution of G-Quotes in the Display Book® (the ''Display Book''). The Exchange is also seeking to make conforming changes to NYSE Rule 60. The text of the proposed rule change is available on the Exchange's Web site (*http://www.nyse.com*), at the Exchange, and at the Commission's Public Reference Room.

II. Self-Regulatory Organization's Statement of the Purpose of, and Statutory Basis for, the Proposed Rule Change

In its filing with the Commission, the NYSE included statements concerning the purpose of, and basis for, the proposed rule change and discussed any comments it received on the proposed rule change. The text of these statements may be examined at the places specified in Item IV below. The NYSE has

[1] 15 U.S.C. 78s(b)(1).

[2] 17 CFR 240.19b–4.

[3] 15 U.S.C. 78s(b)(3)(A).

[4] 17 CFR 240.19b–4(f)(5).

prepared summaries, set forth in Sections A, B, and C below, of the most significant aspects of such statements.

A. Self-Regulatory Organization's Statement of the Purpose of, and Statutory Basis for, the Proposed Rule Change

1. Purpose

The Exchange proposes to amend NYSE Rules 1000 and 13 to allow for the automatic execution of G-Quotes in the Display Book.[5] The Exchange is also seeking to make conforming changes to NYSE Rule 60.

Background

An automatically executable (''auto-ex'') order is an order in a security, other than a bond traded in NYSE Bonds, that initiates an automatic execution in accordance with and to the extent provided by NYSE Rule 1000, immediately upon entry into Exchange systems. Currently, NYSE Rule 13 lists the categories of auto-ex orders and NYSE Rule 1000 permits automatic execution of orders reflected in the Exchange published quotation, orders on the Book, Floor broker agency file interest (''e-Quotes''), specialist interest (''s-Quotes''), and CAP–DI orders. The current rule does not include G-Quotes as an order type eligible order for automatic execution.

Section 11(a)(1) of the Act[6] generally prohibits a member of a national securities exchange from effecting transactions on that exchange for its own account, the account of an associated person, or any account over which it or an associated person exercises discretion. Subsection (G) of Section 11(a)(1) provides an exemption allowing an exchange member to have its own floor broker execute a proprietary transaction (''G order''). A G-Quote is an electronic method for Floor brokers to represent G orders. G orders on NYSE yield priority, parity and precedence based on size to all other non-G orders.

In current market conditions, if a G-Quote hits the Display Book as a marketable order, it is not eligible for automatic execution. In order to execute a marketable G-Quote once it is received in the Display Book, the Display Book in that security is converted to a slow market to allow for manual execution of the G-Quote. In other words, the receipt of a marketable G-Quote suspends auto-execution of the Display Book until it is manually traded out of the Display Book. In order to reduce the amount of times that the Exchange must set their markets slow, the Exchange is seeking this rule change to add G-Quotes as an order eligible for automatic execution in order to maintain optimum market conditions and prevent further temporary disruptions in the flow of the market by having it go ''slow'' when a marketable G-Quote hits the Book. Accordingly, the Exchange seeks to amend NYSE Rule 1000 and NYSE Rule 13 to add G-Quotes as automatically executable orders. Aside from now being automatically executed, G-Quotes will be executed in the same manner as they are today, *i.e.*, they still must yield priority, parity and precedence to all other non-G orders.

The Exchange also seeks to amend NYSE Rule 1000 to make G-Quotes eligible for sweeps following existing rules for sweeps. Specifically, during a sweep, the unfilled balance (''residual'') of an automatically executing order that is not filled in its entirety due to the volume available in the Exchange best bid and offer, may trade with broker proprietary interest files on the Book capable of execution in accordance with Exchange Rules, at each successive price lower than the displayed bid (in the case of a sweeping sell order) or higher than the displayed offer (in the case of a sweeping buy order) as long as the sweep continues.

The Exchange further seeks to make conforming changes to NYSE Rule 60 to provide that the Exchange will autoquote the NYSE's highest bid or lowest offer to reflect G-Quotes. The Exchange notes that in all situations discussed above, the G-Quote will trade as the last interest at a price point, yielding priority, parity and precedence to all other non-G orders.[7]

2. Statutory Basis

The Exchange believes that the basis under the Act is the requirement under Section 6(b)(5) that an exchange have rules that are designed to promote just and equitable principles of trade, to remove impediments to and perfect the mechanism of a free and open market and a national market system and, in general, to protect investors and the public interest.

B. Self-Regulatory Organization's Statement on Burden on Competition

The Exchange does not believe that the proposed rule change will impose any burden on competition that is not necessary or appropriate in furtherance of the purposes of the Act.

C. Self-Regulatory Organization's Statement on Comments on the Proposed Rule Change Received From Members, Participants or Others

The Exchange has neither solicited nor received written comments on the proposed rule change.

III. Date of Effectiveness of the Proposed Rule Change and Timing for Commission Action

Because the foregoing proposed rule change effects a change in an existing order entry or trading system that (i) does not significantly affect the protection of investors or the public interest; (ii) does not impose any significant burden on competition; and (iii) does not have the effect of limiting access to or availability of the system, it has become effective pursuant to Section 19(b)(3)(A)(iii) of the Act[8] and Rule 19b–4(f)(5) thereunder.[9]

At any time within 60 days of the filing of such proposed rule change, the Commission may summarily abrogate such rule change if it appears to the Commission that such action is necessary or appropriate in the public interest, for the protection of investors, or otherwise in furtherance of the purposes of the Act.

IV. Solicitation of Comments

Interested persons are invited to submit written data, views, and arguments concerning the foregoing, including whether the proposed rule change is consistent with the Act. Comments may be submitted by any of the following methods:

Electronic Comments

- Use the Commission's Internet comment form (*http://www.sec.gov/rules/sro.shtml*); or
- Send an e-mail to *rule-comments@sec.gov.* Please include File Number SR–NYSE–2007–120 on the subject line.

Paper Comments

- Send paper comments in triplicate to Nancy M. Morris, Secretary,

[5] The Display Book® system is an order management and execution facility. The Display Book system receives and displays orders to the specialists, contains the Book, and provides a mechanism to execute and report transactions and publish the results to the Consolidated Tape. The Display Book system is connected to a number of other Exchange systems for the purposes of comparison, surveillance, and reporting information to customers and other market data and national market systems.

[6] 15 U.S.C. 78k(a)(1).

[7] Telephone conference among Daniel Labovitz, Managing Director, NYSE Regulation, Inc.; Deanna G. W. Logan, Associate General Counsel, NYSE; Jennifer D. Kim, Counsel, NYSE; Richard Holley, Senior Special Counsel, Division of Trading and Markets (''Division''), Commission; Nathan Saunders, Special Counsel, Division, Commission; and Jan Woo, Special Counsel, Division, Commission, on January 10, 2008.

[8] 15 U.S.C. 78s(b)(3)(A)(iii).

[9] 17 CFR 19b–4(f)(5).

Securities and Exchange Commission, 100 F Street, NE., Washington, DC 20549–1090.

All submissions should refer to File Number SR–NYSE–2007–120. This file number should be included on the subject line if e-mail is used. To help the Commission process and review your comments more efficiently, please use only one method. The Commission will post all comments on the Commission's Internet Web site (*http://www.sec.gov/rules/sro.shtml*). Copies of the submission, all subsequent amendments, all written statements with respect to the proposed rule change that are filed with the Commission, and all written communications relating to the proposed rule change between the Commission and any person, other than those that may be withheld from the public in accordance with the provisions of 5 U.S.C. 552, will be available for inspection and copying in the Commission's Public Reference Room, 100 F Street, NE., Washington, DC 20549, on official business days between the hours of 10 a.m. and 3 p.m. Copies of such filing also will be available for inspection and copying at the principal office of the NYSE. All comments received will be posted without change; the Commission does not edit personal identifying information from submissions. You should submit only information that you wish to make available publicly. All submissions should refer to File Number SR–NYSE–2007–120 and should be submitted on or before February 13, 2008.

For the Commission, by the Division of Trading and Markets, pursuant to delegated authority.[10]

Florence E. Harmon,

Deputy Secretary.

[FR Doc. E8–1055 Filed 1–22–08; 8:45 am]

BILLING CODE 8011–01–P

[10] 17 CFR 200.30–3(a)(12).

SECURITIES AND EXCHANGE COMMISSION

[Release No. 34–57155; File No. SR–Phlx–2008–02]

Self-Regulatory Organizations; Philadelphia Stock Exchange, Inc.; Notice of Filing of Proposed Rule Change To Amend By-Law Article XIV, Section 14–5 and Phlx Rule 50

January 15, 2008.

Pursuant to section 19(b)(1) of the Securities Exchange Act of 1934 (''Act''),[1] and Rule 19b–4 thereunder,[2] notice is hereby given that on January 8, 2008, the Philadelphia Stock Exchange, Inc. (''Phlx'' or ''Exchange'') filed with the Securities and Exchange Commission (''Commission'') a proposed rule change as described in Items I, II, and III below, which Items have been substantially prepared by Phlx. The Commission is publishing this notice to solicit comments on the proposed rule change from interested persons.

I. Self-Regulatory Organization's Statement of the Terms of Substance of the Proposed Rule Change

The Exchange proposes to: (i) Modify the timeframes within which monies owed to the Exchange would become reportable to the Board of Governors (''Board'') for further action; (ii) eliminate references to the monetary threshold of $10,000; (iii) conform By-Law language to indicate that Members, Member Organizations, participants, and participant organizations would be subject to being terminated for failure to pay; and (iv) make other clarifying amendments. The text of the proposed rule change is available at Phlx, the Commission's Public Reference Room, and *http://www.phlx.com*.

II. Self-Regulatory Organization's Statement of the Purpose of, and Statutory Basis for, the Proposed Rule Change

In its filing with the Commission, Phlx included statements concerning the purpose of, and basis for, the proposed rule change and discussed any comments it received on the proposed rule change. The text of these statements may be examined at the places specified in Item IV below. Phlx has prepared summaries, set forth in sections A, B, and C below, of the most significant aspects of such statements.

A. Self-Regulatory Organization's Statement of the Purpose of, and Statutory Basis for, the Proposed Rule Change

1. Purpose

The purpose of the proposed rule change is to amend the language in Phlx By-Law Article XIV, section 14–5 and Exchange Rule 50 to bolster the Exchange's procedures regarding collection of monies owed to the Exchange.

The proposed rule change modifies the timeframes within which monies owed to the Exchange would become reportable to the Board, and by which Members, Member Organizations, participants, and participant organizations would be subject to a suspension or termination. The proposed rule change also defines the types of fees subject to each timeframe. Specifically, the previous time limitations of 50 days from the original invoice for certain monies and 20 days for other categories of monies would be removed from By-Law Article XIV, Section 14–5 and the time limitations in Exchange Rule 50 would be amended. The 50 day timeframe applied to dues, foreign currency options users' fees, fees, other charges and other monies due and owed to the Exchange. The 20 day timeframe applied to fines and other monetary sanctions.

Under this proposal, a Member, or Member Organization, participant, or participant organization or employee thereof shall be referred to the Board for failure to: (i) Pay fines and/or other monetary sanctions within 30 days after notice thereof; or (ii) pay dues, foreign currency options users' fees, fees, other charges, and/or other monies due, including late charges, within 90 days from the date of the original invoice. These timeframes would be amended in Rule 50 and deleted from By-Law Article XIV, section 14–5, rather than appear in both Rule 50 and By-Law Article XIV, section 14–5. The purpose of amending these timeframes is to conform to the Exchange's current accounting and billing cycles and to allow a reasonable time for payment of invoices prior to the necessity to report a past due amount to the Board for further action.

In addition, this proposed rule change would eliminate the references to the monetary threshold of $10,000 from both By-Law Article XIV, section 14–5 and Rule 50, so that all past due amounts are reportable to the Board within the specified proposed new timeframes. The requirement to report to the Finance Committee is proposed to be eliminated from Rule 50. Both of these changes are intended to direct collection matters to the Board directly and without regard to the amount, in order to enhance the immediacy of the Exchange's collection efforts.

The word ''terminate'' is proposed to be added to By-Law Article XIV, section 14–5 to conform with the termination language in By-Law Article XIV, section 14–1. By-Law Article XIV, section 14–1 currently provides that the Board shall have the power to establish and assess penalties and late charges for failure to pay any fees, dues, or charges owed to the Exchange, including, without limitation, termination of a permit or participation (which permit or

[1] 15 U.S.C. 78s(b)(1).

[2] 17 CFR 240.19b–4.

participation may be reissued) and forfeiture of all rights as a Member, Member Organization or participant organization, permit holder or (with respect to a foreign currency options participation) an owner, lessor or lessee. The proposed rule change to By-Law Article XIV, section 14–5 clarifies that the Board has the power to terminate, not just suspend, any permit or rights and privileges of a foreign currency options participation of any Member, foreign currency options participant,[3] Member Organization or participant organization or employee thereof. Currently, By-Law Article XIV, section 14–5 only covers suspension. The Exchange believes it is helpful to add ''terminate'' to By-Law Article XIV, section 14–5 so that the consequences of a failure to pay appear together, even though By-Law Article XIV, section 14–1 already gives the Board the power to terminate. In other words, the Board's power to terminate is merely being repeated in another by-law and is not being created by this proposed rule change.

A Member, Member Organization or employee thereof is required to maintain a permit in order to qualify as a member of the Exchange. That permit has certain rights and privileges[4] that allow the Member or Member Organization, and its employees, to access the trading floor and trade, among other things. In order to trade foreign currency options at the Exchange, either a permit or a foreign currency participation is required.[5]

For non-payment of monies owed, the Board may, using its powers in By-Law Article XIV, Sections 14–1 and 14–5, determine to, in the case of a permit: (1) Suspend trading privileges that flow from the permit for a period of time, until payment is made; or (2) terminate the permit; or, in the case of a foreign currency options participation, (3) suspend the rights and privileges for a period of time; (4) terminate the participation; or (5) if eligible, pursuant to the last paragraph of By-Law Article XIV, section 14–5, dispose of the participation.

In the event that a permit is terminated by the Board, the affected party would be required to reapply for admission with the Exchange for a new permit once payment in full was made of any outstanding balance owed to the Exchange. In the event of disposal,[6] as referenced in the last paragraph of By-Law Article XIV, section 14–5, the Exchange would purchase the participation at the current bid[7] and allocate proceeds to the holder less the amount that was owed the Exchange.[8] This provision is only being changed to delete the $10,000 threshold, such that any amounts owed and not paid after one year may subject a foreign currency options participation to disposal.

2. Statutory Basis

The Exchange believes that its proposal is consistent with section 6(b) of the Act,[9] in general, and furthers the objectives of section 6(b)(5) of the Act,[10] in particular, in that it is designed to promote just and equitable principles of trade, to remove impediments to and perfect the mechanism of a free and open market and a national market system, and, in general to protect investors and the public interest by providing notice and clarity of its reporting procedures for non-payment to the Exchange.

B. Self-Regulatory Organization's Statement on Burden on Competition

The Exchange does not believe that the proposed rule change will impose any burden on competition that is not necessary or appropriate in furtherance of the purposes of the Act.

C. Self-Regulatory Organization's Statement on Comments on the Proposed Rule Change Received From Members, Participants, or Others

No written comments were either solicited or received.

III. Date of Effectiveness of the Proposed Rule Change and Timing for Commission Action

Within 35 days of the date of publication of this notice in the **Federal Register**or within such longer period (i) as the Commission may designate up to 90 days of such date if it finds such longer period to be appropriate and publishes its reasons for so finding or (ii) as to which Phlx consents, the Commission will:

(A) By order approve such proposed rule change, or

(B) Institute proceedings to determine whether the proposed rule change should be disapproved.

IV. Solicitation of Comments

Interested persons are invited to submit written data, views, and arguments concerning the foregoing, including whether the proposed rule change is consistent with the Act. Comments may be submitted by any of the following methods:

Electronic Comments

- Use the Commission's Internet comment form (*http://www.sec.gov/rules/sro.shtml*); or
- Send an e-mail to *rule-comments@sec.gov*. Please include File Number SR–Phlx–2008–02 on the subject line.

Paper Comments

- Send paper comments in triplicate to Nancy M. Morris, Secretary, Securities and Exchange Commission, 100 F Street, NE., Washington, DC 20549–1090.

All submissions should refer to File Number SR–Phlx–2008–02. This file number should be included on the subject line if e-mail is used. To help the Commission process and review your comments more efficiently, please use only one method. The Commission will post all comments on the Commission's Internet Web site (*http://www.sec.gov/*

[3] By-Law Article I, Section 1–1(j) defines a Foreign Currency Options Participation as ''the foreign currency options participations issued from time to time by the Exchange.''

By-Law Article I, Section 1–1(k) defines a Foreign Currency Options Participant or Participant as ''a Member of the Exchange who has purchased a foreign currency options participation and a non-member who has been admitted to the Exchange as a foreign currency options participant by the Admissions Committee.''

By-Law Article I, Section 1–1(l) defines a Foreign Currency Options Participant Organization as:

''* * * corporation, partnership (general or limited), limited liability partnership, limited liability company, business trust or similar organization, transacting business as a broker or a dealer in securities and which has the status of a foreign currency options participant organization by virtue of (i) permission given to it by the Admissions Committee pursuant to the provisions of Section 10–6 of these By-Laws or (ii) the transitional rules adopted by the Exchange pursuant to Section 12–12 of these By-Laws. References herein to officer or partner, when used in the context of a foreign currency options participant organization, shall include any person holding a similar position in any organization other than a corporation or partnership that has the status of a foreign currency options participant organization.''

[4] *See* Exchange Rule 908 (Rights and Privileges of A–1 Permits.)

[5] *See* Exchange By-Law Article XXVII, Section 27–1 (Foreign Currency Options Participants) and Exchange By-Law Article XIII, Section 13–1 (Qualification.) *See also* Securities Exchange Act Release No. 49098 (January 16, 2004), 69 FR 3974 (January 27, 2004) (SR–Phlx–2003–73) at n. 8 which states, ''The Exchange, however, plans to retain its existing Foreign Currency Option (''FCO'') participations (as defined in section 1–1(i) of the amended By-laws). After the demutualization, the ability to trade FCOs on the Phlx will also be available through a Series A–1 Permit, as set forth in proposed Rule 908(b).''

[6] *See* By-Law Article XXVII, Section 27–3 (Privileges and Obligations of Foreign Currency Options Participants.)

[7] The current bid for a Foreign Currency Options Participation is posted weekly in the Exchange bulletin.

[8] *See* By-Law Article XV, Section 15–3 (Disposition of Proceeds of Sale of Foreign Currency Options Participation) and By-Law Article XV, Section 15–11 (Foreign Currency Options Participations Purchased by the Exchange.)

[9] 15 U.S.C. 78f(b).

[10] 15 U.S.C. 78f(b)(5).

rules/sro.shtml). Copies of the submission, all subsequent amendments, all written statements with respect to the proposed rule change that are filed with the Commission, and all written communications relating to the proposed rule change between the Commission and any person, other than those that may be withheld from the public in accordance with the provisions of 5 U.S.C. 552, will be available for inspection and copying in the Commission's Public Reference Room, 100 F Street, NE., Washington, DC 20549, on official business days between the hours of 10 a.m. and 3 p.m. Copies of the filing also will be available for inspection and copying at the principal office of Phlx. All comments received will be posted without change; the Commission does not edit personal identifying information from submissions. You should submit only information that you wish to make available publicly. All submissions should refer to File Number SR–Phlx–2008–02 and should be submitted on or before February 13, 2008.

For the Commission, by the Division of Trading and Markets, pursuant to delegated authority.[11]

Florence E. Harmon,

Deputy Secretary.

[FR Doc. E8–1059 Filed 1–22–08; 8:45 am]

BILLING CODE 8011–01–P

[11] 17 CFR 200.30–3(a)(12).

DEPARTMENT OF TRANSPORTATION

Federal Aviation Administration

Notice of Approval of the Finding of No Significant Impact and Record of Decision for the Final Environmental Assessment (EA) for the Construction of a New Land-Based Airport in Akutan, AK

AGENCY: Federal Aviation Administration (FAA), Department of Transportation (DOT).

ACTION: Notice of approval of the Finding of No Significant Impact/Record of Decision.

SUMMARY: The Federal Aviation Administration is announcing the approval of the Finding of No Significant Impact/Record of Decision (FONSI/ROD) for the Final Environmental Assessment (EA) for the construction of a new land-based airport in Akutan, AK. The FONSI/ROD provides final agency determinations and approvals for the proposed development.

FOR FURTHER INFORMATION CONTACT: Patti Sullivan, Environmental Specialist, Federal Aviation Administration, Alaskan Region, Airports Division, 222 W. 7th Avenue #14, Anchorage, AK 99513–7504. Ms. Sullivan may be contacted during business hours at (907) 271–5454 (phone) and (907) 271–2851 (facsimile).

SUPPLEMENTARY INFORMATION: The FONSI/ROD is for the approval of actions for the construction of an airport, including a runway, a runway safety area, connecting taxiway, an apron, and a snow removal equipment and maintenance facility; an airport access road; two hovercraft landing pads; a hovercraft storage and maintenance facility; and acquisition of a hovercraft. The FONSI/ROD provides the final agency determinations and approvals for Federal actions by the FAA related to the selection of alternatives to meet the purpose and need for the action. The FONSI/ROD also includes required mitigation measures and conditions of approval.

The FONSI/ROD indicates that the selected actions are consistent with existing environmental policies and objectives set forth in the National Environmental Policy Act (NEPA) of 1969, as amended, as well as other Federal and State statutes, and that the actions will not significantly affect the quality of the environment.

The FAA's decision is based upon information contained in the Final EA, issued in December 2007, and on all other applicable documents available to the agency and considered by it, which constitutes the administrative record.

The FAA's determinations are discussed in the FONSI/ROD, which was approved on December 26, 2007.

FONSI/ROD Availability

The FONSI/ROD may be viewed at the following Web site: *http://www.faa.gov/airports_airtraffic/airports/regional_guidance/alaskan/.*

Issued in Anchorage, Alaska on January 11, 2007.

Byron K. Huffman,

Manager, Airports Division, Alaskan Region.

[FR Doc. 08–232 Filed 1–22–08; 8:45 am]

BILLING CODE 4910–13–M

DEPARTMENT OF TRANSPORTATION

Federal Aviation Administration

Finding of No Significant Impact

AGENCY: Federal Aviation Administration (FAA), Department of Transportation (DOT).

ACTION: Environmental Finding Document: Finding of No Significant Impact; Notice.

SUMMARY: The FAA participated as a cooperating agency with the U.S. Army Space and Missile Defense Command/U.S. Army Forces Strategic Command in preparation of the SpaceX Falcon Program Environmental Assessment (EA). The Falcon Launch Vehicle Program is a venture by Space Exploration Technologies, Inc. (SpaceX) to provide space launch operations. The EA analyzed the environmental consequences of conducting an average of six Falcon 1 launches per year and up to four Falcon 9 launches per year (starting after 2008) for the next ten years from Omelek Island, U.S. Army Kwajalein Atoll Ronald Reagan Ballistic Missile Test Site (USAKA/RTS). The EA also analyzed the reentry of the Dragon reentry capsule, which would be carried as a payload on the Falcon 9 launch vehicle. Additionally, the SpaceX Falcon Program EA analyzed infrastructure improvements proposed on Omelek Island and Kwajalein to support the proposed launch activities. SpaceX would require a launch or reentry license from the FAA for launches or reentries of commercial payloads.

From its independent review and consideration, the FAA has determined that the FAA's proposed action is substantially the same as the actions already analyzed in the SpaceX EA and that FAA's comments and suggestions have been satisfied (see 1506.3(c) and FAA Order 1050.1E, 518h). The FAA formally adopts the EA and hereby incorporates the analysis to support future decisions on license applications.

After reviewing and analyzing currently available data and information on existing conditions, project impacts, and measures to mitigate those impacts, the FAA has determined that the proposed action is not a Federal action that would significantly affect the quality of the human environment within the meaning of the National Environmental Policy Act (NEPA). Therefore, the preparation of an Environmental Impact Statement (EIS) is not required and the FAA is issuing a Finding of No Significant Impact (FONSI). The FAA made this determination in accordance with all applicable environmental laws.

For a Copy of the Environmental Assessment or the FONSI Contact: Questions or comments should be directed to Ms. Stacey Zee; FAA Environmental Specialist; Federal Aviation Administration; 800 Independence Ave., SW.; AST–100,

Suite 331; Washington, DC 20591; (202) 267–9305.

Background

Launches of launch vehicles and the reentry of reentry vehicles must be licensed by the FAA pursuant to 49 U.S.C. 70101–70121, the Commercial Space Launch Act. Issuing a launch or reentry license is a Federal action requiring environmental analysis by the FAA in accordance with NEPA, 42 U.S.C. 4321 *et seq.* Upon receipt of a complete license application, the FAA must evaluate the information and determine whether to issue a launch or reentry license to SpaceX, as appropriate. The FAA would use the analyses in the SpaceX Falcon Program EA as the basis for the environmental determination of the impacts to support licensing launches of the Falcon 1 launch vehicle or the Falcon 9 launch vehicle from Omelek Island and/or the reentry of Dragon reentry vehicle. The issuance of a FONSI does not guarantee that a license will be issued by the FAA for the launch of the Falcon launch vehicles or the reentry of the Dragon capsule. It also must meet all safety, risk and indemnification requirements.

Proposed Action

SpaceX is proposing to launch the Falcon 1 and the Falcon 9 launch vehicles and the Dragon reentry capsule from Omelek Island, USAKA/RTS. The Falcon 1 is a small, unmanned, two-stage launch vehicle designed to put small payloads into orbit. The vehicle uses liquid oxygen (LOX) and kerosene as propellants. The first stage is recoverable by use of a parachute. The second stage is not reusable and is not intended to be recovered.

The Falcon 9 is a two-stage, medium class, liquid launch vehicle designed to put space systems and satellites into orbit. Falcon 9 uses LOX and kerosene as propellants. The first stage is recoverable by use of a parachute. The second stage would be reused when launch inclination, payload requirements, and weight allow for its recovery.

The Dragon capsule would be carried as a payload on the Falcon 9 vehicle. The Dragon capsule is being developed to deliver cargo to the International Space Station under contract with the National Aeronautics and Space Administration. Following its mission to deliver cargo to the ISS, the Dragon would reenter the atmosphere and would be recovered similar to the Falcon 9 first stage. The capsule may or may not be refurbished or reused. Locations in the Gulf of Mexico, the coast of California, and the Kwajalein Atoll are being considered as recovery zones.

SpaceX has proposed several infrastructure improvements to Omelek Island to support the proposed launch activities, including construction of a Falcon 9 launch pad and a hangar facility, upgrades to existing propellant storage and loading facilities, and several other facility improvements. SpaceX has also proposed the construction of a LOX plant facility and a Payload Processing Facility on Kwajalein.

Under the No Action Alternative, the proposed Falcon launch activities would not be conducted at Omelek, and SpaceX would not proceed with further construction or modification efforts at USAKA. No additional launches would take place beyond the five that have been authorized.

Environmental Impacts

The following presents a brief summary of the environmental impacts considered in the SpaceX Falcon Program EA. The SpaceX Falcon Program EA is incorporated by reference in this FONSI and the FAA's FONSI is based upon the impacts discussed in that EA.

Air Quality: Emissions from site preparation activities are not expected to exceed USAKA Environmental Standards (UES). Levels of generator emissions are not expected to impact the regional air quality or exceed the USAKA ambient air standards. However, generators may not be in compliance with the incremental degradation standards allowable by the UES. Operational measures, such as limiting fuel consumption or increasing stack height, would be enacted to ensure generator compliance with the UES incremental degradation standards and USAKA ambient air standards. The operation of the proposed LOX plant on Kwajalein would use the existing power supply on Kwajalein that is already subject to the Army's current Document of Environmental Protection (DEP) (U.S. Army Kwajalein Atoll/Kwajalein Missile Range 1999. *Document of Environmental Protection (DEP), Activity: Air Emissions from Major Stationary Sources at USAKA/KMR [Modified November 2000], November).*

Falcon 1 and Falcon 9 launches would have only a localized, minimal impact on air quality. Long-term effects are not expected because the launches would be infrequent and the resulting emissions would be rapidly dispersed and diluted by trade winds. Regional air quality would not be impacted and USAKA ambient air quality standards would not be exceeded by launches of the Falcon launch vehicles or reentry of the Dragon vehicle. No significant impacts to air quality are expected.

Airspace: USAKA/RTS is located under international airspace and therefore, has no formal airspace restrictions governing it. Bucholz Army Airfield is approximately 35 kilometers (22 miles) south of the Omelek launch site. Although site preparation activities may involve flights in and out of Bucholz Army Airfield, they would not restrict access to, nor affect the use of the Airfield. Falcon 1 and Falcon 9 launches could potentially impact flight patterns for military aircraft in the area. However, SpaceX would coordinate Falcon launches with the FAA and USAKA/RTS Commander, which would include scheduling launches to avoid airspace conflicts. No significant impacts to airspace are expected.

Biological Resources: Site preparation activities would result in the removal of trees and vegetation from existing non-forested areas and some forested areas (primarily *Pisonia* trees) from the north point, south point, and along the west coast of the island totaling approximately 10 percent of the total acreage of Omelek. Additionally, some trees would need to be removed around the Falcon 1 launch site, and from the area of the Falcon 9 hangar. No threatened or endangered vegetation has been identified in the area.

Construction noise and the increased presence of personnel could temporarily affect wildlife in the area. Construction ground disturbance and equipment noise-related impacts could include a loss of habitat, displacement of wildlife, and short-term disruption of daily/seasonal behavior. Vegetation removal would likely result in the permanent removal of some of the habitat available for nesting seabirds or foraging shorebirds on Omelek.

Sedimentation from the installation of pilings and a concrete barge-dock 3 meters (10 feet) into the harbor could temporarily degrade water quality in the vicinity due to short-term turbidity. Effects to reef fish and benthic species would be temporary. Work would be delayed if threatened or endangered species are observed in the area.

Potential habitat for sea turtles on Omelek includes sandy beaches along the southern and northern tips of the island and the area of the lagoon shoreline from the northern tip of the island south to the north jetty. Personnel would be instructed to avoid all contact with sea turtles or turtle nests that might occur within the area. Within two hours prior to the launch, SpaceX personnel would survey the shoreline 100 meters (328 feet) on both

sides of the launch site to determine whether sea turtles are present or hauling out in the area. If turtles are observed in the area, SpaceX would consult with USAKA Environmental before continuing with launch activities. A fence may be required to prevent a sea turtle take during launches.

Disturbances to vegetation and wildlife during Falcon launches would be minimal and brief. Based on existing analyses of prior and current launches within the region, launch disturbances on migratory birds, threatened or endangered species and other wildlife would be minimal. There is a very small possibility that debris or booster drops could impact migratory whales or sea turtles; however, the majority of the potential impact area is open ocean, where the probability of impacting a species would be very low. No significant impacts to biological resources are expected.

Cultural Resources: All ground-disturbing activities would be planned so that archeologically sensitive areas such as those areas at the northern portion of the islet would be avoided to the extent possible. If the proposed facilities cannot be located to avoid these areas, archeological monitoring with systemic sampling as necessary would accompany construction of any facilities. To minimize disturbances to cultural resources, appropriate measures would be taken, such as installing signage to designate sensitive areas and educating facility personnel about protecting sensitive island resources.

Personnel involved in launch and other operational activities would follow UES requirements in handling or avoiding any cultural resources uncovered during operational or monitoring activities. In addition, no structures eligible for listing on the Republic of the Marshall Islands (RMI) National Register have been identified on Omelek. No significant impacts to cultural resources are anticipated.

Geology and Soils: Due to the minimal duration of site preparation activities, and adherence to Best Management Practices and the USAKA Stormwater Pollution Prevention Plan, adverse geological or soil impacts are not anticipated.

Falcon launch vehicle emissions would consist mainly of carbon monoxide, carbon dioxide, hydrogen and water and would not result in any impacts to geology or soils. There would be a slight risk of soil contamination from accidental spills of propellants or premature flight termination; however, this risk would be minimized because emergency response personnel would comply with the UES, the Emergency Response Plan prepared by SpaceX, and the Kwajalein Environmental Emergency Plan. No significant impacts to geology and soils are expected.

Hazardous Materials and Waste: All hazardous materials used and waste generated during site preparation activities would be handled, transported, stored, treated, and disposed of off-site in accordance with a Hazardous Materials Contingency Plan and Hazardous Waste Management Plan, which would be prepared by SpaceX. These plans would follow regulations established in the UES and the Kwajalein Environmental Emergency Plan.

Materials proposed for use as a result of the proposed action are similar to hazardous materials already in use for other operations at USAKA/RTS. Hazardous materials associated with the proposed action would represent only a small increase in the total amount of materials handled and could easily be accommodated by existing hazardous materials management systems.

Hazardous waste management at USAKA/RTS would continue to be performed in accordance with the UES, which requires hazardous waste to be shipped to the continental United States for treatment and/or disposal. A trained immediate spill response team would be established onsite, and spills would be contained and cleaned up according to the procedures identified in the Kwajalein Environmental Emergency Plan and a SpaceX-specific emergency plan. Therefore, there would not be a significant impact from hazardous materials and hazardous waste management.

Health and Safety: Proposed construction activities would comply with all applicable UES and USAKA/RTS Range Safety Requirements. Additionally, Falcon 1 and Falcon 9 launches would comply with all UES and USAKA/RTS Range Safety Requirements.

All operations involving explosives would require implementation of a written procedure, approved by the USAKA/RTS safety office. These operations would be conducted under the supervision of an approved ordnance officer using explosive-certified personnel.

The Range Safety Officer would review and agree on all missile flight safety specifications prior to all Falcon 1 or Falcon 9 launches. Protection circles, based on the payload, missile and launch azimuth, would be established for each launch. Access to Omelek would be limited to all but mission essential personnel, and personnel would be evacuated from the islet prior to launch. Therefore, significant impacts to health and safety would not be expected.

Infrastructure: The proposed new helipad would be located on the southeast side of the island in order to reduce the potential of impacting the approach and departure path when additional facilities are added.

Unimproved paths used to access the island would be paved. Road design would include an evaluation of rainwater drainage on Omelek, and rainwater control channels or conduit would be installed during paving construction. SpaceX would manage rainwater run-off from paved areas on Omelek by allowing run-off to drain naturally along the access road to the north and along the paved roads to the east toward vegetated areas, and by constructing surface or underground culverts to divert water from the central and southern portions of the island to the harbor.

Power, communications, water, and sewage would be routed through new underground conduits to and from the facilities. Additional trenching would be required in several areas to extend power and communication availability to the new facilities. Construction would include a generator facility with ample power to support proposed launch activities. A Kerosene Propellant, Diesel Fluid, and Water Storage Area on Omelek would be developed to store kerosene and diesel fuel in aboveground tanks or standardized containers, within a concrete containment area. A proposed reverse osmosis system would generate approximately 11,356 liters (3,000) gallons of water per day to support the deluge system; water would be stored in the proposed new Kerosene Propellant, Diesel Fluid, and Water Storage Area.

The demand on electrical, wastewater, solid waste, and water systems to support the storage facility is expected to be within the current capacity of utility systems on Kwajalein and Meck. No significant impacts to existing infrastructure are expected.

Land Use: Construction and operation of proposed facilities and upgrades to existing facilities would not change any existing land uses on Omelek or Kwajalein. Falcon 1 and Falcon 9 launches would be entirely consistent with the mission of the island and would not conflict with any known land use plans, policies, or controls at USAKA.

The establishment and activation of a launch hazard area would require the temporary clearance of the Pacific Ocean area adjacent to the launch site. Temporary clearance of this launch

hazard area should have no impacts on recreational or commercial use of these waters since the area off the island is not used frequently by commercial fisherman or for recreational use by residents of USAKA/RTS. No significant impacts to land use are expected.

Noise: Noise produced during site preparation activities would be minor and short-term, resulting in little to no effect on construction workers or launch personnel. To minimize noise level impacts, all personnel or contractors involved in construction activities would wear hearing protection in areas where noise levels would exceed limits set by the Occupational Safety and Health Administration.

No sensitive noise receptors are in the vicinity of Omelek. The island has been developed solely as a launch support facility with no permanent inhabitants, and there are no inhabited islands within 21 kilometers (13 miles) of the site; therefore, no significant noise impacts from launch activities are expected.

Socioeconomics: Approximately 30 people would be involved in both Falcon 1 and Falcon 9 launch activities. Up to 8 of the 30 SpaceX personnel would live temporarily on Omelek in the SpaceX office facility, as necessary. The remaining transient personnel would reside on Kwajalein and would commute daily between the two islands. No additional facilities would be required to house personnel.

Launch procedures on Omelek could continue to employ a small number of Marshallese from Ebeye and possibly from Majuro in support of ground and facility maintenance. The personal income of the three to seven Marshallese employed to support the launches from Omelek may increase. There would be no impact on the permanent population size, employment characteristics, and the type of housing available on Ebeye and Majuro. No significant impacts to socioeconomics are expected.

Water Resources: Construction of the new Falcon 9 launch pad and the Payload Processing Facility would be confined within the immediate construction area in compliance with the UES and would thus not impact water resources. Proposed construction activities would be performed in accordance with the USAKA Stormwater Pollution Prevention Plan to minimize potential erosion and stormwater runoff. Impacts to the waters surrounding Omelek due to stormwater runoff would be in compliance with the UES nonpoint source requirements and the USAKA Stormwater Pollution Prevention Plan. Best Management Practices would be used to limit turbidity during installation of new pilings and the proposed concrete barge dock.

There is the potential for carbonic acid (a mild acid similar to that in a carbonated beverage) to be produced during launch from the reaction of carbon dioxide in the exhaust plume and water. This carbonic acid would be expected to rapidly evaporate and would have a similar pH to that of rainwater; therefore, no impacts to water resources would be expected to occur from launch emissions.

There is the potential for an accidental propellant spill or premature flight termination to result in released propellant contaminating water resources. This risk, however, would be minimized through compliance with the Hazardous Materials Contingency Plan and Hazardous Waste Management Plan prepared by SpaceX and the Kwajalein Environmental Management Plan. No significant impacts to water resources are expected.

Cumulative Impacts: The proposed action would not occur at the same time as other programs such as Ground-Based Midcourse Defense or Minuteman III planned for the region. The increased size and use of the power station may not comply with the allowable UES incremental degradation standards. Operational options, including a wind-based generator or limiting fuel consumption, are available that would achieve compliance with ambient air quality and incremental degradation standards. With the implementation of such options, it is not likely that the proposed action at Omelek would result in significant cumulative impacts to the regional air quality.

Launches are short-term, discrete events, thus allowing time between launches for emission products to be dispersed and minimizing the potential for impacts to airspace users, biological resources, and public health and safety. Using the required scheduling process for international airspace would minimize the potential for cumulative impacts to the airspace above the open ocean. The loss of approximately 12 percent of the vegetation on Omelek would contribute cumulatively to the reduction of wildlife habitat in the area. No significant cumulative impacts to terrestrial or marine biological resources have been identified as a result of prior launch-related activities in the region. Avoidance would minimize the potential for cumulative cultural resources impacts. Preparation of the launch site and adherence to established hazardous waste and spill prevention procedures and regulations would minimize the potential for cumulative impacts to geology or soils.

Adherence to the hazardous materials and waste management systems of USAKA/RTS and SpaceX would preclude the potential accumulation of hazardous materials or waste. Adherence to the high safety standards at USAKA/RTS would serve to keep any cumulative safety impacts attributable to all USAKA/RTS operations within acceptable standards to both workers and the public. The additional demand on transportation, electrical, wastewater, solid waste, and water systems to support the small number of project-related personnel would be accomplished by the proposed infrastructure upgrades or be within the current capacity of USAKA/RTS. The sound level generated by each Falcon launch would be a short, discrete event and no cumulative noise impacts are anticipated. Adherence to established hazardous waste and spill prevention procedures and regulations would minimize the potential for cumulative impacts to water resources.

Determination: An analysis of the proposed action has concluded that there are no significant short-term or long-term effects to the environment or surrounding populations. After careful and thorough consideration of the facts herein, the undersigned finds that the proposed Federal action is consistent with existing national environmental policies and objectives set forth in section 101(a) of the NEPA and other applicable environmental requirements and will not significantly affect the quality of the human environment or otherwise include any condition requiring consultation pursuant to section 102(2)(c) of NEPA. Therefore, an Environmental Impact Statement for the proposed action is not required.

Date Issued: January 10, 2008, Washington, DC.

Patricia Grace Smith,

Associate Administrator for Commercial Space Transportation.

[FR Doc. E8–1068 Filed 1–22–08; 8:45 am]

BILLING CODE 4910–13–P

DEPARTMENT OF TRANSPORTATION

Federal Aviation Administration

Notice of Intent To Rule on Change in Use of Aeronautical Property at Louisville International Airport, Louisville, KY

AGENCY: Federal Aviation Administration (FAA), Department of Transportation (DOT).

ACTION: Request for public comment.

SUMMARY: The FAA is requesting public comment on the request by the Louisville Regional Airport Authority to change a portion of airport property from aeronautical to non-aeronautical use at the Louisville International Airport, Louisville, Kentucky. The request consists approximately of 1.045 acres of formal release, and 0.145 acres for permanent easement. This action is taken under the provisions of section 125 of the Wendell H. Ford Aviation Investment Reform Act for the 21st Century (AIR 21).

DATES: Comments must be received on or before February 22, 2008.

ADDRESSES: Comments on this notice may be mailed or delivered in triplicate to the FAA at the following address: Memphis Airports District Office, 2862 Business Park Drive, Building G, Memphis, TN 38118.

In addition, one copy of any comments submitted to the FAA must be mailed or delivered to Mr. Charles T. Miller, Executive Director, Louisville Regional Airport Authority, P.O. Box 9129, Louisville, KY 40209–0129.

FOR FURTHER INFORMATION CONTACT: Mr. Tommy L. Dupree, Program Manager, Federal Aviation Administration, Memphis Airports District Office, 2862 Business Park Drive, Building G, Memphis, TN 38118, (901) 322–8185. The application may be reviewed in person at this same location, by appointment.

SUPPLEMENTARY INFORMATION: The FAA proposes to rule and invites public comment on the request to release approximately 1.045 acres and grant a permanent easement of 0.145 acres at the Louisville International Airport, Louisville, KY. Under the provisions of AIR 21 (49 U.S.C. 47107(h)(2)).

On January 14, 2008, the FAA determined that the request to release property at the Louisville International Airport submitted by the airport owner meets the procedural requirements of the Federal Aviation Administration. The FAA may approve the request, in whole or in part, no later than February 22, 2008.

The following is a brief overview of the request:

The Louisville Regional Airport Authority, owner of the Louisville International Airport, is proposing to formally release approximately 1.045 acres and grant permanent easement of approximately 0.145 acres of airport property so that property can be converted to use for industrial development.

Any person may inspect, by appointment, the request in person at the FAA office listed above under **FOR FURTHER INFORMATION CONTACT**.

In addition, any person may, upon appointment and request, inspect the request, notice and other documents germane to the request in person at the Louisville Regional Airport Authority, P.O. Box 9129, Louisville, KY 40209–0129.

Dated: Issued in Memphis, TN, on January 14, 2008.

Phillip J. Braden,

Manager, Memphis Airports District Office, Southern Region.

[FR Doc. 08–233 Filed 1–22–08; 8:45 am]

BILLING CODE 4910–13–M

DEPARTMENT OF TRANSPORTATION

Federal Aviation Administration

Sixth Meeting, Special Committee 211, Nickel-Cadmium, Lead Acid and Rechargeable Lithium Batteries

AGENCY: Federal Aviation Administration (FAA), DOT.

ACTION: Notice of RTCA Special Committee 211, Nickel-Cadmium, Lead Acid and Rechargeable Lithium Batteries.

SUMMARY: The FAA is issuing this notice to advise the public of a meeting of RTCA Special Committee 211, Nickel-Cadmium, Lead Acid and Rechargeable Lithium Batteries.

DATES: The meeting will be held February 5, 2008, from 9 a.m.–5 p.m.

ADDRESSES: The meeting will be held at RTCA, Inc., 1828 L Street, NW., Suite 805, Washington, DC 20036, Colson Board Room.

FOR FURTHER INFORMATION CONTACT: RTCA Secretariat, 1828 L Street, NW., Suite 805, Washington, DC 20036; telephone (202) 833–9339; fax (202) 833–9434; Web site *http://www.rtca.org* for directions.

SUPPLEMENTARY INFORMATION: Pursuant to section 10(a)(2) of the Federal Advisory Committee Act (Pub. L. 92–463, 5 U.S.C., Appendix 2), notice is hereby given for a Special Committee 211 meeting. The agenda will include:

- *February 5:*
- Opening Plenary Session (Welcome, Introductions, and Administrative Remarks, Agenda Overview).
- Review/Approval of the Fifth Meeting Summary, RTCA Paper No. 221–07/SC211–014.
- Final Review/Approval of a new document—(*Minimum Operational Performance Standards for Rechargeable Lithium Battery Systems*), RTCA Paper No. 297—07/SC211–015.
- Discuss steps necessary to incorporate NiMh technology to D0–293 as requested by the FAA.
- Closing Plenary Session (Other Business, Establish Agenda, Date and Place of Next Meeting, Adjourn).

Attendance is open to the interested public but limited to space availability. With the approval of the chairmen, members of the public may present oral statements at the meeting. Persons wishing to present statements or obtain information should contact the person listed in the **FOR FURTHER INFORMATION CONTACT** section. Members of the public may present a written statement to the committee at any time.

Issued in Washington, DC, on January 4, 2008.

Francisco Estrada C.,

RTCA Advisory Committee.

[FR Doc. 08–230 Filed 1–22–08; 8:45 am]

BILLING CODE 4910–13–M

DEPARTMENT OF TRANSPORTATION

Federal Aviation Administration

Third Meeting: RTCA Special Committee 214/Standards for Air Traffic Data Communication Services

AGENCY: Federal Aviation Administration (FAA), DOT.

ACTION: Notice of RTCA Special Committee 214, Standards for Air Traffic Data Communication Services.

SUMMARY: The FAA is issuing this notice to advise the public of the third meeting of RTCA Special Committee 214, Standards for Air Traffic Data Communication Services.

DATES: The meeting will be held February 11–15, 2008, from 9 a.m.–5 p.m.

ADDRESSES: The meeting will be held at General Dynamics Decision Systems, Scottsdale, AZ.

FOR FURTHER INFORMATION CONTACT: RTCA Secretariat, 1828 L Street, NW., Suite 805, Washington, DC 20036; telephone (202) 833–9339; fax (202) 833–9434; Web site *http://www.rtca.org* for directions. (2) Hosted by Matt Johnson (480) 441–0122 (E) *Matthew.Johnson@gdc4s.com.*

SUPPLEMENTARY INFORMATION: Pursuant to section 10(a)(2) of the Federal Advisory Committee Act (Pub. L. 92–463, 5 U.S.C., Appendix 2), notice is hereby given for a Special Committee 214 meeting. The agenda will include:

Meeting Objectives

Agree the Environmental Definitions.
Agree the Service Descriptions.
Agree the Operational Safety Assessment and Operational Performance.
Assessment Methodology.
Establish Subgroup 3—Interoperability.
Agree on the Plan and Organization.

- February 11:
  - Questions regarding work thus far (especially for those that did not follow the subgroup activities).
  - OSA and OPA Methodology Tutorials.
- February 12:
  - Opening Plenary Session (Welcome, Introductions, and Administrative Remarks, Agenda Review and Approval of Summary for meeting #2).
  - Subgroup Reports
  - SG–1.
  - SG–2.
  - Establish SG–3—Interoperability.
  - Review and Resolve Draft OSED Product.
- February 13:
  - Subgroup Working Sessions.
  - Subgroup Activity: Subgroup General, SG1, SG2 and SG3.
- February 14:
  - Subgroup Working Sessions.
  - Subgroups Activity: Subgroups General, SG1, SG2 and SG3.
- February 15:
  - Subgroup Reports.
  - SG–1.
  - SG–2.
  - SG–3.
  - Committee Scope—Terms of Reference, Proposed Changes, Presentation, Discussion, Recommendations.
  - Closing Plenary Session (Establish Dates, Location and Agenda for Next Meeting, Other Business, Adjourn).

Attendance is open to the interested public but limited to space availability. With the approval of the chairmen, members of the public may present oral statements at the meeting. Persons wishing to present statements or obtain information should contact the person listed in the FOR FURTHER INFORMATION CONTACT section.

Members of the public may present a written statement to the committee at any time.

Issued in Washington, DC, on January 11, 2008.

Francisco Estrada C.,

RTCA Advisory Committee.

[FR Doc. 08–231 Filed 1–22–08; 8:45 am]

BILLING CODE 4910–13–M

DEPARTMENT OF THE TREASURY

Office of Foreign Assets Control

Additional Designations, Foreign Narcotics Kingpin Designation Act

AGENCY: Office of Foreign Assets Control, Treasury.

ACTION: Notice.

SUMMARY: The Treasury Department's Office of Foreign Assets Control (''OFAC'') is publishing the names of 7 additional entities and individuals whose property and interests in property have been blocked pursuant to the Foreign Narcotics Kingpin Designation Act (''Kingpin Act'') (21 U.S.C. 1901–1908, 8 U.S.C. 1182).

DATES: The designation by the Secretary of the Treasury of the one entity and six individuals identified in this notice pursuant to section 805(b) of the Kingpin Act is effective on January 15, 2008.

FOR FURTHER INFORMATION CONTACT: Assistant Director, Compliance Outreach & Implementation, Office of Foreign Assets Control, Department of the Treasury, Washington, DC 20220, tel.: 202/622–2490.

SUPPLEMENTARY INFORMATION:

Electronic and Facsimile Availability

This document and additional information concerning OFAC are available on OFAC's Web site (*http://www.treas.gov/ofac*) or via facsimile through a 24-hour fax-on-demand service, tel.: (202) 622–0077.

Background

The Kingpin Act became law on December 3, 1999. The Kingpin Act establishes a program targeting the activities of significant foreign narcotics traffickers and their organizations on a worldwide basis. It provides a statutory framework for the President to impose sanctions against significant foreign narcotics traffickers and their organizations on a worldwide basis, with the objective of denying their businesses and agents access to the U.S. financial system and to the benefits of trade and transactions involving U.S. companies and individuals.

The Kingpin Act blocks all property and interests in property, subject to U.S. jurisdiction, owned or controlled by significant foreign narcotics traffickers as identified by the President. In addition, the Kingpin Act blocks the property and interests in property, subject to U.S. jurisdiction, of foreign persons designated by the Secretary of Treasury, in consultation with the Attorney General, the Director of Central Intelligence, the Director of the Federal Bureau of Investigation, the Administrator of the Drug Enforcement Administration, the Secretary of Defense, the Secretary of State, and the Secretary of Homeland Security who are found to be: (1) Materially assisting in, or providing financial or technological support for or to, or providing goods or services in support of, the international narcotics trafficking activities of a person designated pursuant to the Kingpin Act; (2) owned, controlled, or directed by, or acting for or on behalf of, a person designated pursuant to the Kingpin Act; or (3) playing a significant role in international narcotics trafficking.

On January 15, 2008, OFAC designated one additional entity and six additional individuals whose property and interests in property are blocked pursuant to section 805(b) of the Foreign Narcotics Kingpin Designation Act.

The list of additional designees is as follows:

Entity:

1. COMERCIALIZADORA COLOMBIAN MONEY EXCHANGE LTDA., Avenida 40 No. 26C–10 Local 304, Villavicencio, Colombia; Calle 82 No. 11–75 Local 164, Bogota, Colombia; Carrera 15 No. 90–36 Local 101, Bogota, Colombia; NIT # 830090469–6 (Colombia); (ENTITY) [SDNTK].

Individuals:

1. AGUDELO VELASQUEZ, Norberto Antonio (a.k.a. ''Amado''); Guasca, Cundinamarca, Colombia; DOB 20 Aug 1955; POB Colombia; Citizen Colombia; Nationality Colombia; Cedula No. 4590874 (Colombia); (INDIVIDUAL) [SDNTK].
2. PAVA GIRALDO, Dora Lilia, c/o COMERCIALIZADORA COLOMBIAN MONEY EXCHANGE LTDA., Bogota, Colombia; DOB 22 Nov 1971; POB Colombia; Citizen Colombia; Nationality Colombia; Cedula No. 39771709 (Colombia); (INDIVIDUAL) [SDNTK].
3. VARGAS ALBA, Cesar Augusto, c/o COMERCIALIZADORA COLOMBIAN MONEY EXCHANGE LTDA., Bogota, Colombia; DOB 27 Aug 1969; POB Colombia; Citizen Colombia; Nationality Colombia; Cedula No. 79578481 (Colombia); Passport AI980101 (Colombia); (INDIVIDUAL) [SDNTK].
4. VARGAS ALBA, Jorge Leandro (a.k.a. ''El Canoso''); c/o COMERCIALIZADORA COLOMBIAN MONEY EXCHANGE LTDA., Bogota, Colombia; DOB 17 Jan 1968; POB Colombia; Citizen Colombia; Nationality Colombia; Cedula No. 17642230 (Colombia); Passport AI263725 (Colombia); (INDIVIDUAL) [SDNTK].

5. VARGAS ARIAS, Jorge Eliecer, c/o COMERCIALIZADORA COLOMBIAN MONEY EXCHANGE LTDA., Bogota, Colombia; Calle 165 No. 25–65 Apartamento 503, Bogota, Colombia; DOB 22 Nov 1952; POB Colombia; Citizen Colombia; Nationality Colombia; Cedula No. 4894606 (Colombia); Passport 4894606 (Colombia); (INDIVIDUAL) [SDNTK].

6. VARGAS SOLER, Sandra Milena, c/o COMERCIALIZADORA COLOMBIAN MONEY EXCHANGE LTDA., Bogota, Colombia; DOB 05 Jan 1980; POB Colombia; Citizen Colombia; Nationality Colombia; Cedula No. 40047576 (Colombia); (INDIVIDUAL) [SDNTK].

Dated: January 15, 2008.

Adam J. Szubin,

Director, Office of Foreign Assets Control.

[FR Doc. E8–1041 Filed 1–22–08; 8:45 am]

BILLING CODE 4811–45–P

DEPARTMENT OF THE TREASURY

Office of Thrift Supervision

Interagency Charter and Federal Deposit Insurance Application

AGENCY: Office of Thrift Supervision (OTS), Treasury.

ACTION: Notice and request for comment.

SUMMARY: The proposed information collection request (ICR) described below has been submitted to the Office of Management and Budget (OMB) for review and approval, as required by the Paperwork Reduction Act of 1995. OTS is soliciting public comments on the proposal.

DATES: Submit written comments on or before February 22, 2008. A copy of this ICR, with applicable supporting documentation, can be obtained from RegInfo.gov at *http://www.reginfo.gov/public/do/PRAMain.*

ADDRESSES: Send comments, referring to the collection by title of the proposal or by OMB approval number, to OMB and OTS at these addresses: Office of Information and Regulatory Affairs, Attention: Desk Officer for OTS, U.S. Office of Management and Budget, 725 17th Street, NW., Room 10235, Washington, DC 20503, or by fax to (202) 395–6974; and Information Collection Comments, Chief Counsel's Office, Office of Thrift Supervision, 1700 G Street, NW., Washington, DC 20552, by fax to (202) 906–6518, or by e-mail to *infocollection.comments@ots.treas.gov.* OTS will post comments and the related index on the OTS Internet Site at *http://www.ots.treas.gov.* In addition, interested persons may inspect comments at the Public Reading Room, 1700 G Street, NW., by appointment. To make an appointment, call (202) 906–5922, send an e-mail to *public.info@ots.treas.gov,* or send a facsimile transmission to (202) 906–7755.

FOR FURTHER INFORMATION CONTACT: For further information or to obtain a copy of the submission to OMB, please contact Ira L. Mills at, *ira.mills@ots.treas.gov,* (202) 906–6531, or facsimile number (202) 906–6518, Regulations and Litigation Division, Chief Counsel's Office, Office of Thrift Supervision, 1700 G Street, NW., Washington, DC 20552.

SUPPLEMENTARY INFORMATION:

OTS may not conduct or sponsor an information collection, and respondents are not required to respond to an information collection, unless the information collection displays a currently valid OMB control number. As part of the approval process, we invite comments on the following information collection.

Title of Proposal: Interagency Charter and Federal Deposit Insurance Application.

OMB Number: 1550–0005.

Form Number: OTS Forms 138 and 1623.

Description: Organizers of a Federal savings association must file an Interagency Charter and Federal Deposit Insurance Application for permission to organize with the Office of Thrift Supervision (OTS). The submission is required to establish a Federal savings association or a Federal savings bank, and the issuance of a Federal charter.

OTS analyzes each information collection to determine whether to approve the proposed application for a Federal charter.

Type of Review: Extension of a currently approved collection.

Affected Public: Business or other for-profit; Federal Government.

Estimated Number of Respondents: 45.

Estimated Number of Responses: 45.

Estimated Frequency of Response: On occasion.

Estimated Total Burden: 5,625 hours.

Clearance Officer: Ira L. Mills, (202) 906–6531, Office of Thrift Supervision, 1700 G Street, NW., Washington, DC 20552.

OMB Reviewer: Desk Officer for OTS, Fax: (202) 395–6974, U.S. Office of Management and Budget, 725 17th Street, NW., Room 10235, Washington, DC 20503.

Dated: January 17, 2008.

Deborah Dakin,

Senior Deputy Chief Counsel, Regulations and Legislation Division.

[FR Doc. E8–1111 Filed 1–22–08; 8:45 am]

BILLING CODE 6720–01–P

DEPARTMENT OF VETERANS AFFAIRS

[OMB Control No. 2900–0362]

Proposed Information Collection (Claim Under Loan Guaranty/Claim Form—Adjustable Rate Mortgages); Comment Request

AGENCY: Veterans Benefits Administration, Department of Veterans Affairs.

ACTION: Notice.

SUMMARY: The Veterans Benefits Administration (VBA), Department of Veterans Affairs (VA), is announcing an opportunity for public comment on the proposed collection of certain information by the agency. Under the Paperwork Reduction Act (PRA) of 1995, Federal agencies are required to publish notice in the **Federal Register** concerning each proposed collection of information, including each proposed extension of a currently approved collection, and allow 60 days for public comment in response to the notice. This notice solicits comments on the information needed to determine the amount owed to a holder of a defaulted VA guaranteed home loan.

DATES: Written comments and recommendations on the proposed collection of information should be received on or before March 24, 2008.

ADDRESSES: Submit written comments on the collection of information through *www.Regulations.gov* or to Nancy J. Kessinger, Veterans Benefits Administration (20M35), Department of Veterans Affairs, 810 Vermont Avenue, NW., Washington, DC 20420 or e-mail to *nancy.kessinger@va.gov.* Please refer to ''OMB Control No. 2900–0362'' in any correspondence. During the comment period, comments may be viewed online through the Federal Docket Management System (FDMS) at *www.Regulations.gov.*

FOR FURTHER INFORMATION CONTACT: Nancy J. Kessinger at (202) 461–9769 or FAX (202) 275–5947.

SUPPLEMENTARY INFORMATION: Under the PRA of 1995 (Pub. L. 104–13; 44 U.S.C. 3501–3521), Federal agencies must obtain approval from the Office of Management and Budget (OMB) for each collection of information they conduct or sponsor. This request for comment is

being made pursuant to Section 3506(c)(2)(A) of the PRA.

With respect to the following collection of information, VBA invites comments on: (1) Whether the proposed collection of information is necessary for the proper performance of VBA's functions, including whether the information will have practical utility; (2) the accuracy of VBA's estimate of the burden of the proposed collection of information; (3) ways to enhance the quality, utility, and clarity of the information to be collected; and (4) ways to minimize the burden of the collection of information on respondents, including through the use of automated collection techniques or the use of other forms of information technology.

Titles:

a. Claim Under Loan Guaranty, VA Form 26–1874.

b. Claim Form—Adjustable Rate Mortgages, VA Form 26–1874a.

OMB Control Number: 2900–0362.

Type of Review: Extension of a currently approved collection.

Abstract:

a. Lenders and holders of VA guaranteed home loans use VA Form 26–1874 as notification to VA of default of such loans.

b. Lenders and holders of VA loans submit VA Form 26–1874a as an attachment to VA Form 26–1874 when filing a claim under the loan guaranty resulting from the termination of an Adjustable Rate Mortgage Loan. The information obtained on both forms is used to determine the amount owed to the holder under the guaranty home loan.

Affected Public: Business or other for profit.

Estimated Annual Burden:

a. VA Form 26–1874—25,806 hours.

b. VA Form 26–1874a—333 hours.

Estimated Average Burden Per Respondent:

a. VA Form 26–1874—60 minutes.

b. VA Form 26–1874a—20 minutes.

Frequency of Response: On occasion.

Estimated Number of Total Respondents:

a. VA Form 26–1874—25,806.

b. VA Form 26–1874a—1,000.

Dated: January 14, 2008.

By direction of the Secretary.

Denise McLamb,

Program Analyst, Records Management Service.

[FR Doc. E8–1085 Filed 1–22–08; 8:45 am]

BILLING CODE 8320–01–P

DEPARTMENT OF VETERANS AFFAIRS

[OMB Control No. 2900–0666]

Proposed Information Collection (Information Regarding Apportionment of Beneficiary's Award); Comment Request

AGENCY: Veterans Benefits Administration, Department of Veterans Affairs.

ACTION: Notice.

SUMMARY: The Veterans Benefits Administration (VBA), Department of Veterans Affairs (VA), is announcing an opportunity for public comment on the proposed collection of certain information by the agency. Under the Paperwork Reduction Act (PRA) of 1995, Federal agencies are required to publish notice in the **Federal Register** concerning each proposed collection of information, including each proposed extension of a currently approved collection and allow 60 days for public comment in response to the notice. This notice solicits comments on information needed to determine a spouse and children entitlement to a portion of a veteran or beneficiary's compensation and pension benefits.

DATES: Written comments and recommendations on the proposed collection of information should be received on or before March 24, 2008.

ADDRESSES: Submit written comments on the collection of information through *www.Regulations.gov* or to Nancy J. Kessinger, Veterans Benefits Administration (20M35), Department of Veterans Affairs, 810 Vermont Avenue, NW., Washington, DC 20420 or e-mail to *nancy.kessinger@va.gov.* Please refer to ''OMB Control No. 2900–0666'' in any correspondence. During the comment period, comments may be viewed online through the Federal Docket Management System (FDMS) at *www.Regulations.gov.*

FOR FURTHER INFORMATION CONTACT: Nancy J. Kessinger at (202) 461–9769 or FAX (202) 275–5947.

SUPPLEMENTARY INFORMATION: Under the PRA of 1995 (Pub. L. 104–13; 44 U.S.C. 3501—3521), Federal agencies must obtain approval from the Office of Management and Budget (OMB) for each collection of information they conduct or sponsor. This request for comment is being made pursuant to Section 3506(c)(2)(A) of the PRA.

With respect to the following collection of information, VBA invites comments on: (1) Whether the proposed collection of information is necessary for the proper performance of VBA's functions, including whether the information will have practical utility; (2) the accuracy of VBA's estimate of the burden of the proposed collection of information; (3) ways to enhance the quality, utility, and clarity of the information to be collected; and (4) ways to minimize the burden of the collection of information on respondents, including through the use of automated collection techniques or the use of other forms of information technology.

Title: Information Regarding Apportionment of Beneficiary's Award, VA Form 21–0788.

OMB Control Number: 2900–0666.

Type of Review: Extension of a currently approved collection.

Abstract: The data collected on VA Form 21–0788 is used to determine whether a veteran's or beneficiary's compensation and pension benefits may be allocated to his or her dependents. The veteran and the beneficiary use the form to report their income information in order for VA to determine the amount of benefits that may be apportioned to a spouse and children who do not reside with the veteran. A portion of the surviving spouse's benefits may be allocated to children of deceased veterans, who do not reside with the surviving spouse.

Affected Public: Individuals or households.

Estimated Annual Burden: 12,500 hours.

Estimated Average Burden Per Respondent: 30 minutes.

Frequency of Response: One time.

Estimated Number of Respondents: 25,000.

Dated: January 14, 2008.

By direction of the Secretary.

Denise McLamb,

Program Analyst, Records Management Service.

[FR Doc. E8–1086 Filed 1–22–08; 8:45 am]

BILLING CODE 8320–01–P

DEPARTMENT OF VETERANS AFFAIRS

[OMB Control No. 2900–0075]

Proposed Information Collection (Statement in Support of Claim); Comment Request

AGENCY: Veterans Benefits Administration, Department of Veterans Affairs.

ACTION: Notice.

SUMMARY: The Veterans Benefits Administration (VBA), Department of Veterans Affairs (VA), is announcing an opportunity for public comment on the

proposed collection of certain information by the agency. Under the Paperwork Reduction Act (PRA) of 1995, Federal agencies are required to publish notice in the **Federal Register** concerning each proposed collection of information, including each proposed extension of a currently approved collection and allow 60 days for public comment in response to the notice. This notice solicits comments on information needed to ensure that statements submitted by or on behalf of a claimant is true and correct.

DATES: Written comments and recommendations on the proposed collection of information should be received on or before March 24, 2008.

ADDRESSES: Submit written comments on the collection of information through *www.Regulations.gov* or to Nancy J. Kessinger, Veterans Benefits Administration (20M35), Department of Veterans Affairs, 810 Vermont Avenue, NW., Washington, DC 20420 or e-mail to *nancy.kessinger@va.gov.* Please refer to ''OMB Control No. 2900–0075'' in any correspondence. During the comment period, comments may be viewed online through the Federal Docket Management System (FDMS) at *www.Regulations.gov.*

FOR FURTHER INFORMATION CONTACT: Nancy J. Kessinger at (202) 461–9769 or FAX (202) 275–5947.

SUPPLEMENTARY INFORMATION: Under the PRA of 1995 (Pub. L. 104–13; 44 U.S.C. 3501–3521), Federal agencies must obtain approval from the Office of Management and Budget (OMB) for each collection of information they conduct or sponsor. This request for comment is being made pursuant to Section 3506(c)(2)(A) of the PRA.

With respect to the following collection of information, VBA invites comments on: (1) Whether the proposed collection of information is necessary for the proper performance of VBA's functions, including whether the information will have practical utility; (2) the accuracy of VBA's estimate of the burden of the proposed collection of information; (3) ways to enhance the quality, utility, and clarity of the information to be collected; and (4) ways to minimize the burden of the collection of information on respondents, including through the use of automated collection techniques or the use of other forms of information technology.

Title: Statement in Support of Claim, VA Form 21–4138.

OMB Control Number: 2900–0075.

Type of Review: Extension of a currently approved collection.

Abstract: Statements submitted by or on behalf of a claimant must contain a certification by the respondent that the information provided to VA is true and correct in support of various types of benefit claims processed by VA. VA Form 21–4138 is to be used to collect the statement in support of such claims.

Affected Public: Individuals or households.

Estimated Annual Burden: 188,000 hours.

Estimated Average Burden Per Respondent: 15 minutes.

Frequency of Response: On occasion.

Estimated Number of Respondents: 752,000.

Dated: January 14, 2008.

By direction of the Secretary.

Denise McLamb,

Program Analyst, Records Management Service.

[FR Doc. E8–1087 Filed 1–22–08; 8:45 am]

BILLING CODE 8320–01–P

DEPARTMENT OF VETERANS AFFAIRS

[OMB Control No. 2900–0094]

Proposed Information Collection (Supplement to VA Forms 21–526, 21–534, and 21–535 (For Philippine Claims)); Comment Request

AGENCY: Veterans Benefits Administration, Department of Veterans Affairs.

ACTION: Notice.

SUMMARY: The Veterans Benefits Administration (VBA), Department of Veterans Affairs (VA), is announcing an opportunity for public comment on the proposed collection of certain information by the agency. Under the Paperwork Reduction Act (PRA) of 1995, Federal agencies are required to publish notice in the **Federal Register** concerning each proposed collection of information, including each proposed extension of a currently approved collection and allow 60 days for public comment in response to the notice This notice solicits comments on information needed to determine whether a claimant served in the Commonwealth Army of the Philippines or in recognized guerrilla organizations.

DATES: Written comments and recommendations on the proposed collection of information should be received on or before March 24, 2008.

ADDRESSES: Submit written comments on the collection of information through *www.Regulations.gov* or to Nancy J. Kessinger, Veterans Benefits Administration (20M35), Department of Veterans Affairs, 810 Vermont Avenue, NW., Washington, DC 20420 or e-mail to *nancy.kessinger@va.gov.* Please refer to ''OMB Control No. 2900–0094'' in any correspondence. During the comment period, comments may be viewed online through the Federal Docket Management System (FDMS) at *www.Regulations.gov.*

FOR FURTHER INFORMATION CONTACT: Nancy J. Kessinger at (202) 461–9769 or FAX (202) 275–5947.

SUPPLEMENTARY INFORMATION: Under the PRA of 1995 (Pub. L. 104–13; 44 U.S.C. 3501–3521), Federal agencies must obtain approval from the Office of Management and Budget (OMB) for each collection of information they conduct or sponsor. This request for comment is being made pursuant to Section 3506(c)(2)(A) of the PRA.

With respect to the following collection of information, VBA invites comments on: (1) Whether the proposed collection of information is necessary for the proper performance of VBA's functions, including whether the information will have practical utility; (2) the accuracy of VBA's estimate of the burden of the proposed collection of information; (3) ways to enhance the quality, utility, and clarity of the information to be collected; and (4) ways to minimize the burden of the collection of information on respondents, including through the use of automated collection techniques or the use of other forms of information technology.

Title: Supplement to VA Forms 21–526, 21–534, and 21–535 (For Philippine Claims), VA Form 21–4169.

OMB Control Number: 2900–0094.

Type of Review: Extension of a currently approved collection.

Abstract: VA Form 21–4169 is used to collect certain applicants' service information, place of residence, proof of service, and whether the applicant was a member of pro-Japanese, pro-German, or anti-American Filipino organizations. VA uses the information collected to determine the applicant's eligibility for benefits based on Commonwealth Army of the Philippines or recognized guerrilla services.

Affected Public: Individuals or households.

Estimated Annual Burden: 250 hours.

Estimated Average Burden Per Respondent: 15 minutes.

Frequency of Response: One-time.

Estimated Number of Respondents: 1,000.

Dated: January 14, 2008.

By direction of the Secretary.

Denise McLamb,

Program Analyst, Records Management Service.

[FR Doc. E8–1088 Filed 1–22–08; 8:45 am]

BILLING CODE 8320–01–P

DEPARTMENT OF VETERANS AFFAIRS

[OMB Control No. 2900–0052]

Proposed Information Collection (Report of Medical Examination for Disability Evaluation); Comment Request

AGENCY: Veterans Benefits Administration, Department of Veterans Affairs.

ACTION: Notice.

SUMMARY: The Veterans Benefits Administration (VBA), Department of Veterans Affairs (VA), is announcing an opportunity for public comment on the proposed collection of certain information by the agency. Under the Paperwork Reduction Act (PRA) of 1995, Federal agencies are required to publish notice in the **Federal Register** concerning each proposed collection of information, including each proposed extension of a currently approved collection and allow 60 days for public comment in response to the notice. This notice solicits comments for information needed from claimants prior to undergoing a VA medical examination for disability benefits.

DATES: Written comments and recommendations on the proposed collection of information should be received on or before March 24, 2008.

ADDRESSES: Submit written comments on the collection of information through *www.Regulations.gov* or to Nancy J. Kessinger, Veterans Benefits Administration (20M35), Department of Veterans Affairs, 810 Vermont Avenue, NW., Washington, DC 20420 or e-mail to *nancy.kessinger@va.gov.* Please refer to ''OMB Control No. 2900–0052'' in any correspondence. During the comment period, comments may be viewed online through the Federal Docket Management System (FDMS) at *www.Regulations.gov.*

FOR FURTHER INFORMATION CONTACT: Nancy J. Kessinger at (202) 461–9769 or FAX (202) 275–5947.

SUPPLEMENTARY INFORMATION: Under the PRA of 1995 (Pub. L. 104–13; 44 U.S.C. 3501–3521), Federal agencies must obtain approval from the Office of Management and Budget (OMB) for each collection of information they conduct or sponsor. This request for comment is being made pursuant to Section 3506(c)(2)(A) of the PRA.

With respect to the following collection of information, VBA invites comments on: (1) Whether the proposed collection of information is necessary for the proper performance of VBA's functions, including whether the information will have practical utility; (2) the accuracy of VBA's estimate of the burden of the proposed collection of information; (3) ways to enhance the quality, utility, and clarity of the information to be collected; and (4) ways to minimize the burden of the collection of information on respondents, including through the use of automated collection techniques or the use of other forms of information technology.

Title: Report of Medical Examination for Disability Evaluation, VA Form 21–2545.

OMB Control Number: 2900–0052.

Type of Review: Extension of a currently approved collection.

Abstract: VA Form 21–2545 is completed by claimants prior to undergoing a VA examination for disability benefits. The examining physician also completes the form to record the findings of such examination. An examination is required where the reasonable probability of a valid claim is indicated in any claims for disability compensation or pension, including claims for benefits based on the need of a veteran, surviving spouse, or parent for regular aid and attendance, and for benefits based on a child's incapacity of self-support. VA uses the data to determine the level of disability.

Affected Public: Individuals or households.

Estimated Annual Burden: 45,000 hours.

Estimated Average Burden Per Respondent: 15 minutes.

Frequency of Response: On occasion.

Estimated Number of Respondents: 180,000.

Dated: January 14, 2008.

By direction of the Secretary.

Denise McLamb,

Program Analyst, Records Management Service.

[FR Doc. E8–1089 Filed 1–22–08; 8:45 am]

BILLING CODE 8320–01–P

Reader Aids

Federal Register

Vol. 73, No. 15

Wednesday, January 23, 2008

CUSTOMER SERVICE AND INFORMATION

Federal Register/Code of Federal Regulations	
General Information, indexes and other finding aids	**202–741–6000**
Laws	**741–6000**
Presidential Documents	
Executive orders and proclamations	**741–6000**
The United States Government Manual	**741–6000**
Other Services	
Electronic and on-line services (voice)	**741–6020**
Privacy Act Compilation	**741–6064**
Public Laws Update Service (numbers, dates, etc.)	**741–6043**
TTY for the deaf-and-hard-of-hearing	**741–6086**

ELECTRONIC RESEARCH

World Wide Web

Full text of the daily Federal Register, CFR and other publications is located at: **http://www.gpoaccess.gov/nara/index.html**

Federal Register information and research tools, including Public Inspection List, indexes, and links to GPO Access are located at: **http://www.archives.gov/federal__register**

E-mail

FEDREGTOC-L (Federal Register Table of Contents LISTSERV) is an open e-mail service that provides subscribers with a digital form of the Federal Register Table of Contents. The digital form of the Federal Register Table of Contents includes HTML and PDF links to the full text of each document.

To join or leave, go to **http://listserv.access.gpo.gov** and select *Online mailing list archives, FEDREGTOC-L, Join or leave the list (or change settings);* then follow the instructions.

PENS (Public Law Electronic Notification Service) is an e-mail service that notifies subscribers of recently enacted laws.

To subscribe, go to **http://listserv.gsa.gov/archives/publaws-l.html** and select *Join or leave the list (or change settings);* then follow the instructions.

FEDREGTOC-L and **PENS** are mailing lists only. We cannot respond to specific inquiries.

Reference questions. Send questions and comments about the Federal Register system to: **fedreg.info@nara.gov**

The Federal Register staff cannot interpret specific documents or regulations.

FEDERAL REGISTER PAGES AND DATE, JANUARY

1–388 2
389–810 3
811–1042 4
1043–1266 7
1267–1492 8
1493–1814 9
1815–1960 10
1961–2142 11
2143–2410 14
2411–2792 15
2793–3180 16
3181–3376 17
3377–3614 18
3615–3860 22
3861–4050 23

CFR PARTS AFFECTED DURING JANUARY

At the end of each month, the Office of the Federal Register publishes separately a List of CFR Sections Affected (LSA), which lists parts and sections affected by documents published since the revision date of each title.

3 CFR

Proclamations:
7746 (See 8214) 1439
7747 (See 8214) 1439
8097 (See 8214) 1439
8214 1439
8215 3375
8216 3855

Executive Orders:
12947 (See Notice of Jan. 18, 2008) 3859
13420 (Superseded by 13454) 1481
13454 1481

Administrative Orders:
Presidential Determinations:
No. 2008-6 of December 12, 2007 3849
No. 2008-7 of December 14, 2007 3851
Memorandums:
Memorandum of Dec. 17, 2007 1813

5 CFR

531 1493
1201 2143

Proposed Rules:
293 3410
532 3220
591 772

6 CFR

Proposed Rules:
19 2187

7 CFR

3 1
987 3377

Proposed Rules:
457 3411

9 CFR

93 3379
94 ..... 1043, 3379
95 3379

Proposed Rules:
2 413
3 413

10 CFR

72 17
609 1961
707 3861

Proposed Rules:
Ch. I 826
20 ..... 3221, 3812
30 3812
40 3812
50 3812
70 3812
72 3812
73 2435
430 3653

12 CFR

229 1267
303 2143
308 2143
309 2143
558 17
563 17
564 17
567 17
574 17

Proposed Rules:
226 1672
360 2364
361 420

13 CFR

101 1962

14 CFR

23 ..... 19, 389, 3385
25 27
39 ..... 29, 394, 395, 397, 400, 1044, 1046, 1048, 1052, 1055, 1269, 1815, 1816, 1964, 1968, 2793, 2795, 2797, 2799, 2801, 2803, 3615, 3618, 3620, 3621, 3623, 3625, 3863
71 ..... 1271, 3625

Proposed Rules:
21 3655
23 ..... 3881, 3882, 3884
39 ... 73, 75, 77, 80, 84, 87, 830, 833, 1556, 1558, 1842, 1844, 1846, 1848, 2190, 2192, 2195, 2197, 2200, 2204, 2206, 3417, 3419, 3422, 3425, 3428, 3656, 3885, 3887, 3889, 3891
71 ..... 3430, 3431

15 CFR

700 32
730 32
740 32
743 32
744 32
745 32
746 32
748 32
750 32
752 32
754 32
774 32

17 CFR

210 ..... 934, 986

228....934
229....934
230....934, 986
239....934, 986
240....934
249....934, 986
260....934
269....934

18 CFR

11....3626
37....2984
38....38
40....1770
260....1014
284....38, 1014
385....1014
806....1272
808....1272
Proposed Rules:
284....1116

19 CFR

351....3634
Proposed Rules:
4....90, 1299
12....90, 1299
18....90, 1299
19....2843
101....90, 1299
103....90, 1299
113....90, 1299
122....90, 1299
123....90, 1299
141....90, 1299
143....1299
144....2843
149....90, 1299
192....90, 1299

20 CFR

404....1970, 2411
405....2411
416....1970, 2411

21 CFR

201....402
208....402
209....402
520....2808
522....2808
526....811, 3181
558....811
1271....3387
Proposed Rules:
314....2848
601....2848
606....1983
610....1983
630....1983
640....1983
660....1983
814....2848
820....1983
1270....1983
1309....3432

22 CFR

22....3867
51....3867

23 CFR

Proposed Rules:
634....268
655....268

24 CFR

200....1430
206....1434
291....1974
970....3867

25 CFR

Proposed Rules:
502....3223
542....3224
543....3224
546....3223
547....3224

26 CFR

1....2416, 3868
301....1058
602....3868
Proposed Rules:
1....421, 1131, 1850, 1851, 2436, 3441
301....1131, 1851

28 CFR

0....1493
27....1493

29 CFR

1601....3387
4022....2420
4044....2420
Proposed Rules:
1910....1299
1926....3893

30 CFR

Proposed Rules:
916....3894
931....1983

31 CFR

1....1817
103....1975
Proposed Rules:
210....1560

32 CFR

Proposed Rules:
1701....113

33 CFR

117....41, 1273, 1274, 1495
137....2146
165....43, 1274, 1276, 1280, 3650
Proposed Rules:
117....1565
165....1133

34 CFR

462....2306
Proposed Rules:
674....1300
682....1300
685....1300
686....1300

36 CFR

13....3181
Proposed Rules:
7....2436
294....1135
1190....2308
1191....2308
1195....2309

37 CFR

Proposed Rules:
201....3898

38 CFR

3....1075
21....1076, 2421
Proposed Rules:
4....428, 432

39 CFR

20....2156
Proposed Rules:
111....1158

40 CFR

50....1497
52....48, 1282, 1819, 2156, 2159, 2162, 2163, 2428, 3187, 3190, 3192, 3389, 3396
60....3568
62....3194
63....226, 1738, 1916, 3568
81....2162, 2163, 3396
85....3568
90....3568
180....51, 52, 1503, 1508, 1512, 1517, 1976, 2809, 2812
260....57
261....57
271....1077
1048....3568
1065....3568
1068....3568
Proposed Rules:
50....836, 1568
51....1402
52....125, 836, 1162, 1175, 1570, 1851, 1853, 2209, 2210, 2436, 3224, 3225, 3226, 3446, 3447
62....3900
81....1162, 1175, 3447
93....1402
704....2854
720....2854
721....2854
723....2854

41 CFR

102-72....2166
102-84....2167

42 CFR

72....3874
409....2568
410....2431, 2568
411....2568
413....2568
414....404, 2431, 2433, 2568
415....2568
418....2568
423....2568
424....2431, 2568
482....2568
484....2431, 2568
485....2568
488....3405
Proposed Rules:
422....1301
423....1301
441....3546

43 CFR

Proposed Rules:
46....126

44 CFR

64....2816
65....2818, 2822, 2827
67....2830, 2835
Proposed Rules:
67....2859, 2868, 2873, 2880
206....2187

45 CFR

1304....1285
1306....1285
Proposed Rules:
1355....2082

47 CFR

0....813
64....1297, 3197
73....3202
76....1080, 3652
Proposed Rules:
Ch. I....546
25....2437
27....2437
61....1306
69....1306
73....1576, 1577, 2211
76....1195

48 CFR

Ch. 8....2712
25....3409
204....1822
207....1823, 1826
209....1823, 1826
212....1822
217....1826
234....1823
235....1823
237....1826
239....1828
246....1826
252....1822, 1823, 1828, 1830
1516....1978
1533....1978
1552....1978
Proposed Rules:
252....1853

49 CFR

172....1089
563....2168
604....2326
Proposed Rules:
192....1307
571....3901

50 CFR

17....1525, 3146
600....406
622....406, 3218
648....411, 820, 2184
679....823, 1554, 1555, 1831, 3218, 3879
Proposed Rules:
17....1312, 1855, 3228
224....1986
300....140
622....439
648....441

REMINDERS

The items in this list were editorially compiled as an aid to Federal Register users. Inclusion or exclusion from this list has no legal significance.

RULES GOING INTO EFFECT JANUARY 23, 2008

HOUSING AND URBAN DEVELOPMENT DEPARTMENT

Demolition or Disposition of Public Housing Projects; Correction; published 1-23-08

TRANSPORTATION DEPARTMENT

Federal Aviation Administration

Airworthiness directives:

Viking Air Ltd. Model (Caribou) DHC-4 and (Caribou) DHC-4A Airplanes; published 1-8-08

TREASURY DEPARTMENT

Internal Revenue Service

Application of Section 338 to Insurance Companies; published 1-23-08

COMMENTS DUE NEXT WEEK

AGRICULTURE DEPARTMENT

Agricultural Marketing Service

National Organic Program:

Allowed and prohibited substances; national list; Sunset Review; comments due by 1-28-08; published 12-28-07 [FR E7-25270]

COMMERCE DEPARTMENT

National Oceanic and Atmospheric Administration

Fishery conservation and management:

Northeastern United States fisheries—

Atlantic bluefish; comments due by 1-28-08; published 12-27-07 [FR E7-25080]

Atlantic mackerel, squid, and butterfish; comments due by 1-28-08; published 12-28-07 [FR E7-25251]

Atlantic sea scallop; comments due by 1-29-08; published 11-30-07 [FR E7-23266]

Atlantic sea scallop; comments due by 1-31-08; published 12-17-07 [FR E7-24254]

Bivalve molluscan shellfish and whole or roe-on scallops; comments due by 1-30-08; published 12-31-07 [FR E7-25255]

International fisheries regulations:

Pacific halibut—

Guided sport charter vessel fishery; comments due by 1-30-08; published 12-31-07 [FR E7-25407]

Pacific Halibut Fisheries; Catch Sharing Plan; comments due by 2-1-08; published 1-2-08 [FR E7-25535]

COMMODITY FUTURES TRADING COMMISSION

Commodity Exchange Act:

Federal speculative position limits; risk management exemption; comments due by 1-28-08; published 11-27-07 [FR E7-22992]

ENERGY DEPARTMENT

Energy Efficiency and Renewable Energy Office

Consumer products; energy conservation program:

Energy conservation standards—

Dishwashers, dehumidifiers, electric and gas kitchen ranges and ovens and commercial clothes washers; comments due by 1-29-08; published 11-15-07 [FR E7-22040]

ENVIRONMENTAL PROTECTION AGENCY

Air programs; approval and promulgation; State plans for designated facilities and pollutants:

Nevada; comments due by 1-28-08; published 12-13-07 [FR E7-24167]

Air Quality Implementation Plans; Approval and Promulgation; Various States:

California; comments due by 2-1-08; published 1-2-08 [FR E7-25100]

Air quality implementation plans; approval and promulgation; various States:

Illinois; comments due by 1-30-08; published 12-31-07 [FR E7-25405]

Air quality planning purposes; designation of areas:

Texas; comments due by 1-30-08; published 12-31-07 [FR E7-25402]

Pesticides; tolerances in food, animal feeds, and raw agricultural commodities:

Acetamiprid; comments due by 1-28-08; published 11-28-07 [FR E7-23055]

FEDERAL DEPOSIT INSURANCE CORPORATION

Practice and procedure:

Annual independent audits and reporting requirements; comments due by 1-31-08; published 11-2-07 [FR E7-21168]

HEALTH AND HUMAN SERVICES DEPARTMENT

Centers for Medicare & Medicaid Services

Administrative regulations:

Appeals board; revisions to procedures and hearings; comments due by 1-28-08; published 12-28-07 [FR 07-06221]

Medicare:

Hospital Outpatient Prospective Payment System and CY 2008 payment rates, etc.; comments due by 1-28-08; published 11-27-07 [FR 07-05507]

HEALTH AND HUMAN SERVICES DEPARTMENT

Food and Drug Administration

Food for human consumption:

Food labeling—

Reference values and mandatory nutrients; revision; comments due by 1-31-08; published 11-2-07 [FR 07-05440]

HEALTH AND HUMAN SERVICES DEPARTMENT

Administrative regulations:

Appeals board; revisions to procedures and hearings; comments due by 1-28-08; published 12-28-07 [FR 07-06221]

HEALTH AND HUMAN SERVICES DEPARTMENT

Inspector General Office, Health and Human Services Department

Administrative regulations:

Appeals board; revisions to procedures and hearings; comments due by 1-28-08; published 12-28-07 [FR 07-06221]

HOMELAND SECURITY DEPARTMENT

Federal Emergency Management Agency

Flood elevation determinations:

Alabama and Oklahoma; comments due by 1-31-08; published 11-2-07 [FR E7-21595]

Connecticut; comments due by 1-31-08; published 11-2-07 [FR E7-21607]

Oklahoma; correction; comments due by 1-31-08; published 11-30-07 [FR E7-23215]

Various States; comments due by 1-30-08; published 11-1-07 [FR E7-21540]

INTERIOR DEPARTMENT

Minerals Management Service

Outer Continental Shelf; oil, gas, and sulphur operations:

Pipelines and pipeline rights-of-way; comments due by 1-31-08; published 10-3-07 [FR 07-04831]

JUSTICE DEPARTMENT

Drug Enforcement Administration

Schedules of controlled substances:

U.S. Official Order Form (DEA Form-222); new single-sheet format; comments due by 1-28-08; published 11-27-07 [FR E7-22984]

JUSTICE DEPARTMENT

Executive Office for Immigration Review

Immigration:

Aliens; voluntary departure review; comments due by 1-29-08; published 11-30-07 [FR E7-23289]

LABOR DEPARTMENT

Occupational Safety and Health Administration

Construction safety and health standards:

Confined spaces; exposure hazards; comments due by 1-28-08; published 11-28-07 [FR E7-21893]

NUCLEAR REGULATORY COMMISSION

Spent nuclear fuel and high-level radioactive waste; independent storage; licensing requirements:

Approved spent fuel storage casks; list; comments due by 1-30-08; published 12-31-07 [FR E7-25414]

TRANSPORTATION DEPARTMENT

Federal Aviation Administration

Airworthiness Directives

Boeing Model 737-600, -700, -700C, -800 and -900 Series Airplanes; comments due by 1-28-08; published 1-2-08 [FR E7-25477]

Airworthiness directives:

Air Tractor, Inc.; comments due by 1-29-08; published 11-30-07 [FR E7-23229]

Boeing; comments due by 1-31-08; published 12-17-07 [FR E7-24329]

Airworthiness Directives:

Construcciones Aeronauticas, S.A., (CASA) Model C-212 Airplanes; comments due by 2-1-08; published 1-2-08 [FR E7-25481]

Airworthiness directives:

Eclipse Aviation Corp.; comments due by 1-28-08; published 11-27-07 [FR E7-23024]

Class D airspace; comments due by 2-1-08; published 12-18-07 [FR 07-06065]

Class E airspace; comments due by 1-28-08; published 12-13-07 [FR 07-06018]

TRANSPORTATION DEPARTMENT

Saint Lawrence Seaway Development Corporation

Seaway regulations and rules:

Miscellaneous amendments; comments due by 1-30-08; published 12-31-07 [FR E7-25340]

TREASURY DEPARTMENT

Alcohol and Tobacco Tax and Trade Bureau

Alcoholic beverages:

Wines, distilled spirits, and malt beverages; labeling and advertising—

Alcohol content statement; comments due by 1-27-08; published 9-20-07 [FR E7-18510]

LIST OF PUBLIC LAWS

This is a continuing list of public bills from the current session of Congress which have become Federal laws. It may be used in conjunction with "P L U S" (Public Laws Update Service) on 202–741–6043. This list is also available online at *http://www.archives.gov/federal-register/laws.html*.

The text of laws is not published in the **Federal Register** but may be ordered in "slip law" (individual pamphlet) form from the Superintendent of Documents, U.S. Government Printing Office, Washington, DC 20402 (phone, 202–512–1808). The text will also be made available on the Internet from GPO Access at *http://www.gpoaccess.gov/plaws/index.html*. Some laws may not yet be available.

H.R. 660/P.L. 110–177

Court Security Improvement Act of 2007 (Jan. 7, 2008; 121 Stat. 2534)

H.R. 3690/P.L. 110–178

U.S. Capitol Police and Library of Congress Police Merger Implementation Act of 2007 (Jan. 7, 2008; 121 Stat. 2546)

S. 863/P.L. 110–179

Emergency and Disaster Assistance Fraud Penalty Enhancement Act of 2007 (Jan. 7, 2008; 121 Stat. 2556)

H.R. 2640/P.L. 110–180

NICS Improvement Amendments Act of 2007 (Jan. 8, 2008; 121 Stat. 2559)

Last List January 7, 2008

Public Laws Electronic Notification Service (PENS)

PENS is a free electronic mail notification service of newly enacted public laws. To subscribe, go to *http://listserv.gsa.gov/archives/publaws-l.html*

Note: This service is strictly for E-mail notification of new laws. The text of laws is not available through this service. **PENS** cannot respond to specific inquiries sent to this address.