Federal Register

12–13–06 Wednesday
Vol. 71 No. 239 Dec. 13, 2006

Pages 74755–75082

The **FEDERAL REGISTER** (ISSN 0097–6326) is published daily, Monday through Friday, except official holidays, by the Office of the Federal Register, National Archives and Records Administration, Washington, DC 20408, under the Federal Register Act (44 U.S.C. Ch. 15) and the regulations of the Administrative Committee of the Federal Register (1 CFR Ch. I). The Superintendent of Documents, U.S. Government Printing Office, Washington, DC 20402 is the exclusive distributor of the official edition. Periodicals postage is paid at Washington, DC.

The **FEDERAL REGISTER** provides a uniform system for making available to the public regulations and legal notices issued by Federal agencies. These include Presidential proclamations and Executive Orders, Federal agency documents having general applicability and legal effect, documents required to be published by act of Congress, and other Federal agency documents of public interest.

Documents are on file for public inspection in the Office of the Federal Register the day before they are published, unless the issuing agency requests earlier filing. For a list of documents currently on file for public inspection, see *www.archives.gov.*

The seal of the National Archives and Records Administration authenticates the Federal Register as the official serial publication established under the Federal Register Act. Under 44 U.S.C. 1507, the contents of the **Federal Register** shall be judicially noticed.

The **Federal Register** is published in paper and on 24x microfiche. It is also available online at no charge as one of the databases on GPO Access, a service of the U.S. Government Printing Office.

The online edition of the **Federal Register** *www.gpoaccess.gov/nara,* available through GPO Access, is issued under the authority of the Administrative Committee of the Federal Register as the official legal equivalent of the paper and microfiche editions (44 U.S.C. 4101 and 1 CFR 5.10). It is updated by 6 a.m. each day the **Federal Register** is published and includes both text and graphics from Volume 59, Number 1 (January 2, 1994) forward.

For more information about GPO Access, contact the GPO Access User Support Team, call toll free 1-888-293-6498; DC area 202-512-1530; fax at 202-512-1262; or via e-mail at *gpoaccess@gpo.gov.* The Support Team is available between 7:00 a.m. and 9:00 p.m. Eastern Time, Monday–Friday, except official holidays.

The annual subscription price for the **Federal Register** paper edition is $749 plus postage, or $808, plus postage, for a combined **Federal Register, Federal Register** Index and List of CFR Sections Affected (LSA) subscription; the microfiche edition of the **Federal Register** including the **Federal Register** Index and LSA is $165, plus postage. Six month subscriptions are available for one-half the annual rate. The prevailing postal rates will be applied to orders according to the delivery method requested. The price of a single copy of the daily **Federal Register,** including postage, is based on the number of pages: $11 for an issue containing less than 200 pages; $22 for an issue containing 200 to 400 pages; and $33 for an issue containing more than 400 pages. Single issues of the microfiche edition may be purchased for $3 per copy, including postage. Remit check or money order, made payable to the Superintendent of Documents, or charge to your GPO Deposit Account, VISA, MasterCard, American Express, or Discover. Mail to: New Orders, Superintendent of Documents, P.O. Box 371954, Pittsburgh, PA 15250-7954; or call toll free 1-866-512-1800, DC area 202-512-1800; or go to the U.S. Government Online Bookstore site, see *bookstore.gpo.gov.*

There are no restrictions on the republication of material appearing in the **Federal Register.**

How To Cite This Publication: Use the volume number and the page number. Example: 71 FR 12345.

Postmaster: Send address changes to the Superintendent of Documents, Federal Register, U.S. Government Printing Office, Washington DC 20402, along with the entire mailing label from the last issue received.

SUBSCRIPTIONS AND COPIES

PUBLIC	
Subscriptions:	
Paper or fiche	**202–512–1800**
Assistance with public subscriptions	**202–512–1806**
General online information	**202–512–1530; 1–888–293–6498**
Single copies/back copies:	
Paper or fiche	**202–512–1800**
Assistance with public single copies	**1–866–512–1800 (Toll-Free)**
FEDERAL AGENCIES	
Subscriptions:	
Paper or fiche	**202–741–6005**
Assistance with Federal agency subscriptions	**202–741–6005**

Printed on recycled paper.

Contents

Federal Register

Vol. 71, No. 239

Wednesday, December 13, 2006

Agriculture Department
See Animal and Plant Health Inspection Service
See Forest Service

Animal and Plant Health Inspection Service
PROPOSED RULES
Exportation and importation of animals and animal products:
Horse quarantine facilities, permanent, privately owned; standards, 74827–74847
Interstate transportation of animals and animal products (quarantine):
Brucellosis in cattle; research facilities, 74826–74827

Arts and Humanities, National Foundation
See National Foundation on the Arts and the Humanities

Centers for Disease Control and Prevention
NOTICES
Agency information collection activities; proposals, submissions, and approvals, 74914–74915
Meetings:
Advisory Committee to Director, 74915

Centers for Medicare & Medicaid Services
RULES
Group health plans; access, portability, and renewability requirements:
Nondiscrimination in health coverage in group market, 75014–75055
NOTICES
Privacy Act; system of records, 74915–74923

Children and Families Administration
NOTICES
Agency information collection activities; proposals, submissions, and approvals, 74923–74924

Coast Guard
NOTICES
Committees; establishment, renewal, termination, etc.:
Houston-Galveston Area Maritime Security Committee, 74928

Commerce Department
See International Trade Administration

Employee Benefits Security Administration
RULES
Group health plans; access, portability, and renewability requirements:
Nondiscrimination in health coverage in group market, 75014–75055

Environmental Protection Agency
RULES
Air quality implementation plans:
Preparation, adoption, and submittal—
Clean Air Interstate Rule; Federal implementation plans; correction, 74792–74795
Pesticides; tolerances in food, animal feeds, and raw agricultural commodities:
Clothianidin, 74795–74802
Nomenclature changes; technical amendment, 74802–74819
PROPOSED RULES
Air programs:
Clean Air Act—
Virgin Islands Water and Power Authority; exemption, 74886–74895
NOTICES
Meetings:
FIFRA Scientific Advisory Panel, 74901–74904
Pesticide registration, cancellation, etc.:
Ethyl Parathion, 74904–74905
Lindane, 74905–74907
Water pollution control:
Total maximum daily loads—
Arkansas, 74907

Federal Aviation Administration
RULES
Airworthiness standards:
Special conditions—
Airbus Model A380-800 airplane, 74755–74761
Class D airspace
Correction, 74761–74762
Standard instrument approach procedures, 74762–74766
PROPOSED RULES
Airworthiness directives:
General Electric Co., 74873–74878
MT-Propeller Entwicklung GmbH, 74878–74880

Federal Communications Commission
RULES
Common carrier services:
Local and interexchange carriers; minimum customer account record exchange obligations; implementation, 74819–74823
Radio services, special:
Amateur service—
Miscellaneous amendments, 74823
NOTICES
Agency information collection activities; proposals, submissions, and approvals, 74907–74912

Federal Deposit Insurance Corporation
PROPOSED RULES
Deposit insurance coverage; large-bank deposit insurance determination modernization proposal, 74857–74873

Federal Highway Administration
NOTICES
Highway planning and construction; licenses, permits, approvals, etc.:
Texas; State Highway 130 project, 74985–74986

Federal Maritime Commission
NOTICES
Agreements filed, etc., 74912
Ocean transportation intermediary licenses:
Transmodal Logistics International Inc., et al., 74912–74913
Zenus (USA) Logistics LLC et al.; correction, 74913

Federal Motor Carrier Safety Administration
NOTICES
Motor carrier safety standards:
Driver qualifications; diabetes exemptions, 74986–74993

Federal Reserve System
NOTICES
Banks and bank holding companies:
Change in bank control, 74913

Federal Trade Commission
NOTICES
Fair Credit Reporting Act:
Disclosure charges, 74913–74914

Fish and Wildlife Service
PROPOSED RULES
Migratory bird hunting:
Alaska; 2007 subsistence harvest regulations, 75060–75066
NOTICES
Comprehensive conservation plans; availability, etc.:
Hanford Reach National Monument, WA, 74929–74931
Lacreek National Wildlife Refuge and Wetland Management District, SD, 74931–74932

Food and Drug Administration
RULES
Animal drugs, feeds, and related products:
Approved and abbreviated new drug applications; supplements and other changes, 74766–74785
Food for human consumption:
Food labeling—
Dietary supplements; nutrition labeling on 'per day' basis, 74785–74792
NOTICES
Agency information collection activities; proposals, submissions, and approvals, 74924–74927
Meetings:
FDA clinical trial requirements; industry exchange and public workshops, 74927–74928

Foreign Assets Control Office
NOTICES
Sanctions; blocked persons, specially designated nationals, terrorists, narcotics traffickers, and foreign terrorist organizations:
Additional designations of terrorism-related blocked persons and entities, 74998–74999

Forest Service
NOTICES
Meetings:
Resource Advisory Committees—
Modoc, 74896
Tehama County, 74896
National Forest System lands:
Alaska National Forests, AK; outfitting and guiding activities; flat fee policy, 74896

Health and Human Services Department
See Centers for Disease Control and Prevention
See Centers for Medicare & Medicaid Services
See Children and Families Administration
See Food and Drug Administration
NOTICES
Reports and guidance documents; availability, etc.:
Personalized health care improvement through information technology and genomic information in population- and community-based health care delivery systems, 74914

Homeland Security Department
See Coast Guard

Indian Affairs Bureau
NOTICES
Agency information collection activities; proposals, submissions, and approvals, 74932–74933
Land acquisitions into trust:
Jicarilla Apache Tribe of New Mexico, 74933–74937

Interior Department
See Fish and Wildlife Service
See Indian Affairs Bureau
See Land Management Bureau
See Minerals Management Service
NOTICES
Agency information collection activities; proposals, submissions, and approvals, 74928–74929

Internal Revenue Service
RULES
Excise taxes:
Group health plans; access, portability, and renewability requirements—
Nondiscrimination in health coverage in group market, 75014–75055
Pension excise taxes—
Grandfathered church plans; exception to nondiscrimination requirements, 75055–75057

International Trade Administration
NOTICES
Antidumping:
Magnesium metal from—
Russian Federation, 74897
Stainless steel sheet and strip in coils from—
Germany, 74897–74900
Steel concrete reinforcing bars from—
Latvia, 74900–74901

Labor Department
See Employee Benefits Security Administration

Land Management Bureau
NOTICES
Alaska Native claims selection:
Kuskokwim Corp., 74937

Minerals Management Service
NOTICES
Agency information collection activities; proposals, submissions, and approvals, 74937–74941

National Foundation on the Arts and the Humanities
NOTICES
Meetings:
Arts Advisory Panel, 74941

National Highway Traffic Safety Administration
RULES
Motor vehicle safety standards:
Brake hoses; effective date delay, 74823–74825

NOTICES
Motor vehicle safety standards; exemption petitions, etc.:
Braun Corp., 74993–74994
Hankook Tire Co., Ltd., 74995–74996
Maxonlift Corp., 74996
U.S. Bus Corp., 74996–74997

National Labor Relations Board
PROPOSED RULES
Privacy Act; implementation, 74881–74886
NOTICES
Privacy Act; system of records, 74941–74958

Nuclear Regulatory Commission
PROPOSED RULES
Radiation protection standards:
Radiological criteria for license termination; funding shortfalls for facility decommissioning; meeting, 74847–74848
Rulemaking petitions:
Spano, Andrew J., et al.; denied, 74848–74857
NOTICES
Committees; establishment, renewal, termination, etc.:
Licensing Support Network Advisory Review Panel, 74959
Reports and guidance documents; availability, etc.:
Spent fuel storage and transportation casks; damaged fuel definition, 74959–74960
Applications, hearings, determinations, etc.:
Nuclear Management Co., LLC, 74958–74959

Nuclear Waste Technical Review Board
NOTICES
Meetings:
Yucca Mountain, NV—
Repository development; technical and scientific issues, 74960

Overseas Private Investment Corporation
NOTICES
Agency information collection activities; proposals, submissions, and approvals, 74960–74961

Pipeline and Hazardous Materials Safety Administration
NOTICES
Hazardous materials:
Special permit applications delayed; list, 74997–74998

Securities and Exchange Commission
PROPOSED RULES
Securities:
Securities futures; short selling In connection with public offering, 75002–75011
Short sale price test; amendments, 75068–75082
NOTICES
Investment Company Act of 1940:
Mexico Equity & Income Fund, Inc., 74961–74962
Self-regulatory organizations; proposed rule changes:
American Stock Exchange LLC, 74962–74965
Boston Stock Exchange, Inc., 74965–74966
Chicago Board Options Exchange, Inc., 74966–74969
International Securities Exchange, LLC, 74969–74970
National Association of Securities Dealers, Inc., 74970–74971
New York Stock Exchange LLC, 74972–74974
NYSE Arca, Inc., 74974
Options Clearing Corp., 74974–74975
Philadelphia Stock Exchange, Inc., 74975–74982

Small Business Administration
NOTICES
Agency information collection activities; proposals, submissions, and approvals, 74982
Loan programs:
CommunityExpress Pilot Program; extension, 74982

State Department
PROPOSED RULES
Passports:
Card format passport; fee schedule changes, 74880
NOTICES
Culturally significant objects imported for exhibition:
Jeff Wall, 74982–74983
Matisse: Painter as Sculptor, 74983
Temptations of Flora: Jan van Huysum (1682-1749), 74983

Surface Transportation Board
NOTICES
Railroad operation, acquisition, construction, etc.:
BNSF Railway Co., 74998

Transportation Department
See Federal Aviation Administration
See Federal Highway Administration
See Federal Motor Carrier Safety Administration
See National Highway Traffic Safety Administration
See Pipeline and Hazardous Materials Safety Administration
See Surface Transportation Board
NOTICES
Aviation proceedings:
Agreements filed; weekly receipts, 74983–74984
Certificates of public convenience and necessity and foreign air carrier permits; weekly applications, 74984–74985

Treasury Department
See Foreign Assets Control Office
See Internal Revenue Service
NOTICES
Agency information collection activities; proposals, submissions, and approvals, 74998

Separate Parts In This Issue

Part II
Securities and Exchange Commission, 75002–75011

Part III
Health and Human Services Department, Centers for Medicare & Medicaid Services; Labor Department, Employee Benefits Security Administration; Treasury Department, Internal Revenue Service, 75014–75055
Treasury Department, Internal Revenue Service, 75055–75057

Part IV
Interior Department, Fish and Wildlife Service, 75060–75066

Part V
Securities and Exchange Commission, 75068–75082

Reader Aids

Consult the Reader Aids section at the end of this issue for phone numbers, online resources, finding aids, reminders, and notice of recently enacted public laws.

To subscribe to the Federal Register Table of Contents LISTSERV electronic mailing list, go to http://listserv.access.gpo.gov and select Online mailing list archives, FEDREGTOC-L, Join or leave the list (or change settings); then follow the instructions.

CFR PARTS AFFECTED IN THIS ISSUE

A cumulative list of the parts affected this month can be found in the Reader Aids section at the end of this issue.

9 CFR

Proposed Rules:

78 74826
93 74827

10 CFR

Proposed Rules:

20 74847
54 74848

12 CFR

Proposed Rules:

Ch. III 74857

14 CFR

25 (2 documents) 74755, 74758
71 74761
97 (2 documents) 74762, 74764

Proposed Rules:

39 (2 documents) 74873, 74878

17 CFR

Proposed Rules:

240 75068
242 (2 documents) 75002, 75068

21 CFR

25 74766
101 74785
500 74766
514 74766
558 74766

22 CFR

Proposed Rules:

22 74880
51 74880

26 CFR

54 75014

29 CFR

54 75055
2590 75014

Proposed Rules:

102 74881

40 CFR

51 74792
96 74792
97 74792
180 (2 documents) 74795, 74802

Proposed Rules:

69 74886

45 CFR

146 75014

47 CFR

64 74819
97 74823

49 CFR

571 74823

50 CFR

Proposed Rules:

92 75060

Rules and Regulations

Federal Register

Vol. 71, No. 239

Wednesday, December 13, 2006

This section of the FEDERAL REGISTER contains regulatory documents having general applicability and legal effect, most of which are keyed to and codified in the Code of Federal Regulations, which is published under 50 titles pursuant to 44 U.S.C. 1510.

The Code of Federal Regulations is sold by the Superintendent of Documents. Prices of new books are listed in the first FEDERAL REGISTER issue of each week.

DEPARTMENT OF TRANSPORTATION

Federal Aviation Administration

14 CFR Part 25

[Docket No. NM352; Special Conditions No. 25–339–SC]

Special Conditions: Airbus Model A380–800 Airplane, Lithium Ion Battery Installation

AGENCY: Federal Aviation Administration (FAA), DOT.

ACTION: Final special conditions.

SUMMARY: These special conditions are issued for the Airbus A380–800 airplane. This airplane will have novel or unusual design features when compared to the state of technology envisioned in the airworthiness standards for transport category airplanes. The Airbus A380–800 will incorporate the use of high capacity lithium ion battery technology in on-board systems. For this design feature, the applicable airworthiness regulations do not contain adequate or appropriate safety standards regarding lithium ion batteries. These special conditions contain the additional safety standards that the Administrator considers necessary to establish a level of safety equivalent to that established by the existing airworthiness standards.

DATES: *Effective Date:* The effective date of these special conditions is November 30, 2006.

FOR FURTHER INFORMATION CONTACT: Holly Thorson, FAA, International Branch, ANM–116, Transport Airplane Directorate, Aircraft Certification Service, 1601 Lind Avenue SW., Renton, Washington 98055–4056; telephone (425) 227–1357; facsimile (425) 227–1149.

SUPPLEMENTARY INFORMATION:

Background

Airbus applied for FAA certification/validation of the provisionally-designated Model A3XX–100 in its letter AI/L 810.0223/98, dated August 12, 1998, to the FAA. Application for certification by the Joint Aviation Authorities (JAA) of Europe had been made on January 16, 1998, reference AI/L 810.0019/98. In its letter to the FAA, Airbus requested an extension to the 5-year period for type certification in accordance with 14 CFR 21.17(c). The request was for an extension to a 7-year period, using the date of the initial application letter to the JAA as the reference date. The reason given by Airbus for the request for extension is related to the technical challenges, complexity, and the number of new and novel features on the airplane. On November 12, 1998, the Manager, Aircraft Engineering Division, AIR–100, granted Airbus' request for the 7-year period, based on the date of application to the JAA.

In its letter AI/LE–A 828.0040/99 Issue 3, dated July 20, 2001, Airbus stated that its target date for type certification of the Model A380–800 has been moved from May 2005, to January 2006, to match the delivery date of the first production airplane. In a subsequent letter (AI/L 810.0223/98 issue 3, January 27, 2006), Airbus stated that its target date for type certification is October 2, 2006. In accordance with 14 CFR 21.17(d)(2), Airbus chose a new application date of December 20, 1999, and requested that the 7-year certification period which had already been approved be continued. The FAA has reviewed the part 25 certification basis for the Model A380–800 airplane, and no changes are required based on the new application date.

The Model A380–800 airplane will be an all-new, four-engine jet transport airplane with a full double-deck, two-aisle cabin. The maximum takeoff weight will be 1.235 million pounds with a typical three-class layout of 555 passengers.

Type Certification Basis

Under the provisions of 14 CFR 21.17, Airbus must show that the Model A380–800 airplane meets the applicable provisions of 14 CFR part 25, as amended by Amendments 25–1 through 25–98. If the Administrator finds that the applicable airworthiness regulations do not contain adequate or appropriate safety standards for the Airbus A380–800 airplane because of novel or unusual design features, special conditions are prescribed under the provisions of 14 CFR 21.16.

In addition to the applicable airworthiness regulations and special conditions, the Airbus Model A380–800 airplane must comply with the fuel vent and exhaust emission requirements of 14 CFR 34 and the noise certification requirements of 14 CFR part 36. In addition, the FAA must issue a finding of regulatory adequacy pursuant to section 611 of Public Law 93–574, the ''Noise Control Act of 1972.''

Special conditions, as defined in 14 CFR 11.19, are issued in accordance with 14 CFR 11.38 and become part of the type certification basis in accordance with 14 CFR 21.17(a)(2).

Special conditions are initially applicable to the model for which they are issued. Should the type certificate for that model be amended later to include any other model that incorporates the same novel or unusual design feature, the special conditions would also apply to the other model under the provisions of 14 CFR 21.101.

Discussion of Novel or Unusual Design Features

Statement of Issue

The Airbus A380–800 airplane will use lithium ion batteries for its emergency lighting system. Large, high capacity, rechargeable lithium ion batteries are a novel or unusual design feature in transport category airplanes. This type of battery has certain failure, operational, and maintenance characteristics that differ significantly from those of the nickel-cadmium and lead-acid rechargeable batteries currently approved for installation on large transport category airplanes. The FAA is proposing this special condition to require that (1) All characteristics of the lithium ion battery and its installation that could affect safe operation of the Airbus A380–800 airplane are addressed, and (2) appropriate maintenance requirements are established to ensure the availability of electrical power from the batteries when needed.

Background

The current regulations governing installation of batteries in large

transport category airplanes were derived from Civil Air Regulations (CAR) Part 4b.625(d) as part of the re-codification of CAR 4b that established 14 CFR Part 25 in February, 1965. The new battery requirements, 14 CFR 25.1353(c)(1) through (c)(4), basically reworded the CAR requirements.

Increased use of nickel-cadmium batteries in small airplanes resulted in increased incidents of battery fires and failures which led to additional rulemaking affecting large transport category airplanes as well as small airplanes. On September 1, 1977 and March 1, 1978, respectively the FAA issued 14 CFR 25.1353c(5) and c(6), governing nickel-cadmium battery installations on large transport category airplanes.

The proposed use of lithium ion batteries for the emergency lighting system on the Airbus A380 airplane has prompted the FAA to review the adequacy of these existing regulations. Our review indicates that the existing regulations do not adequately address several failure, operational, and maintenance characteristics of lithium ion batteries that could affect the safety and reliability of the Airbus A380's lithium ion battery installation.

At present, there is limited experience with use of rechargeable lithium ion batteries in applications involving commercial aviation. However, other users of this technology, ranging from wireless telephone manufacturers to the electric vehicle industry, have noted safety problems with lithium ion batteries. These problems include overcharging, over-discharging, and flammability of cell components.

1. Overcharging

In general, lithium ion batteries are significantly more susceptible to internal failures that can result in self-sustaining increases in temperature and pressure (*i.e.*, thermal runaway) than their nickel-cadmium or lead-acid counterparts. This is especially true for overcharging which causes heating and destabilization of the components of the cell, leading to the formation (by plating) of highly unstable metallic lithium. The metallic lithium can ignite, resulting in a self-sustaining fire or explosion. Finally, the severity of thermal runaway due to overcharging increases with increasing battery capacity due to the higher amount of electrolyte in large batteries.

2. Over-discharging

Discharge of some types of lithium ion batteries beyond a certain voltage (typically 2.4 volts) can cause corrosion of the electrodes of the cell, resulting in loss of battery capacity that cannot be reversed by recharging. This loss of capacity may not be detected by the simple voltage measurements commonly available to flight crews as a means of checking battery status—a problem shared with nickel-cadmium batteries.

3. Flammability of Cell Components

Unlike nickel-cadmium and lead-acid batteries, some types of lithium ion batteries use liquid electrolytes that are flammable. The electrolyte can serve as a source of fuel for an external fire, if there is a breach of the battery container.

These problems experienced by users of lithium ion batteries raise concern about the use of these batteries in commercial aviation. The intent of the proposed special condition is to establish appropriate airworthiness standards for lithium ion battery installations in the Airbus A380–800 airplane and to ensure, as required by 14 CFR 25.601, that these battery installations are not hazardous or unreliable. To address these concerns, the proposed special conditions adopt the following requirements:

- Those sections of 14 CFR 25.1353 that are applicable to lithium ion batteries.
- The flammable fluid fire protection requirements of 14 CFR 25.863. In the past, this rule was not applied to batteries of transport category airplanes, since the electrolytes utilized in lead-acid and nickel-cadmium batteries are not flammable.
- New requirements to address the hazards of overcharging and over-discharging that are unique to lithium ion batteries.
- New maintenance requirements to ensure that batteries used as spares are maintained in an appropriate state of charge.

Discussion of Comments

Notice of Proposed Special Conditions No. 25–06–08–SC, pertaining to the lithium ion battery installation in the Airbus A380 airplane, was published in the **Federal Register** on September 7, 2006. Comments were received from Acme Electric Corporation and the Airline Pilots Association (ALPA). In addition, comments submitted to the European Aviation Safety Agency (EASA) by the Civil Aviation Authority of the United Kingdom were sent to the FAA by EASA.

Comments From Acme Electric Corporation

Requested change 1: The commenter suggests that " * * * charging in environments of less than 0 °C [degrees Celsius] will need to be addressed; several references have stated that Lithium metal may plate onto the anode if charged in this environment."

FAA response: Paragraph 1 of the special conditions addresses charging environment by requiring that "safe cell temperatures and pressures must be maintained during any foreseeable charging or discharging condition." We consider charging in environments of less than 0 degrees C to be foreseeable. In our judgment, therefore, this concern is adequately addressed by the special conditions, as proposed.

Requested change 2: The commenter indicates that the special conditions should address the effects of a short circuit in the battery on the battery itself and on its surroundings.

FAA response: This issue is addressed in Paragraphs 1 and 6 of the special conditions. Paragraph 1 specifies that

> Safe cell temperatures and pressures must be maintained during any foreseeable charging or discharging condition and during any failure of the charging or battery monitoring system not shown to be extremely remote. The lithium ion battery installation must preclude explosion in the event of those failures.

Paragraph 6 specifies that

> Each lithium ion battery installation must have provisions to prevent any hazardous effect on structure or essential systems caused by the maximum amount of heat the battery can generate during a short circuit of the battery or of its individual cells.

We consider short circuits in the battery to be a failure that is covered by these special conditions.

Requested change 3: The commenter also states that "At the present time, Lithium Ion batteries require non-passive electronics and/or software as an integral part of the assembly; therefore, additional requirements of 14 CFR 25.1309, 25.1316 and 25.1431 are also needed."

FAA response: The requirements of § 25.1309, 25.1316, and 25.1431 do apply to the lithium ion battery installation. The special conditions specify additional requirements that are needed, but not already provided by the part 25 requirements in the A380 certification basis.

Comments From the Airline Pilots Association

The Airline Pilots Association (ALPA) conditionally supports the FAA's proposal for special conditions for

lithium ion batteries on the A380–800 aircraft, but ''strongly maintains that there needs to be adequate protections and procedures in place to ensure that concerns regarding lithium ion batteries are fully addressed and protected against.'' Appended to the ALPA comments was a copy of FAA report DOT/FAA/AR–06/38, September 2006, Flammability Assessment of Bulk-Packed, Rechargeable Lithium-Ion Cells in Transport Category Aircraft. With the knowledge of the safety hazards described in the appended report and by others, ALPA requested that the FAA consider the specific concerns discussed below.

Requested change 4: The commenter requests that Paragraph 3 of the special conditions be revised to ensure that the certification design of the A380 prevents explosive or toxic gasses emitted by a lithium ion battery from entering the cabin. The commenter also requests that the FAA assure that flight crew procedures and training are adequate to protect both passengers and crew, if explosive or toxic gasses do enter the cabin.

FAA response: The FAA has no regulations that prohibit smoke or gasses from electrical equipment in the electrical equipment bays from entering the flightdeck or passenger cabins. However, 14 CFR 25.857 prohibits hazardous quantities of smoke, flames, or extinguishing agents from cargo compartments from entering any compartment occupied by the crew or passengers.

Paragraph (3) of these special conditions specifies that

> No explosive or toxic gasses emitted by any lithium ion battery in normal operation or as the result of any failure of the battery charging system, monitoring system, or battery installation—not shown to be extremely remote—may accumulate in hazardous quantities within the airplane.''

The special conditions require that any explosive or toxic gasses emitted by a lithium ion battery be limited to less than hazardous quantities anywhere on the airplane. (A separate set of special conditions pertaining to fire protection for the A380 requires a demonstration of means to prevent hazardous quantities of smoke originating from an electrical equipment bay from penetrating into the flightdeck or passenger cabins.)

Finally, FAA operational requirements ensure that all crewmembers receive adequate training in both normal and emergency equipment and procedures. Flight attendants are cognizant of cabin environmental conditions and are trained to report smoke or fumes in the cabin. Flightdeck crew are aware of emergency procedures for responding to smoke, gasses, or fumes from known or unknown sources.

Requested change 5: The commenter states,

> We are very concerned with a fire erupting in flight, and being able to rapidly extinguish it. The Special Conditions should require that there be a means provided to apply extinguishing agents by the flight (cabin) crew instead of promoting it as an option in managing the threat posed by the use of lithium-ion batteries. ALPA maintains that the petitioner must provide means for extinguishing fires that occur vs. listing it as an option in § 25.863.

FAA response: The FAA shares the commenter's concern over a fire erupting in flight. We have concluded that providing a means for controlling or extinguishing a fire—such as stopping the flow of fluids, shutting down equipment, or fireproof containment, as described in paragraph (4) of 14 CFR 25.863—is an adequate alternative to requiring the flight or cabin crew to use extinguishing agents.

Requested change 6: The commenter suggests that the special conditions address means to ensure that the lithium ion batteries do not overheat or overcharge in the event of failure or malfunction of the automatic disconnect function, when a means of disconnecting the batteries from the charging source is not available.

FAA response: The FAA agrees that there should be a means to prevent overheating or overcharging of lithium ion batteries in the event of failure or malfunction of the automatic disconnect function, described in Paragraph (7). Paragraphs (1), (2), and (6) of these special conditions address the issue of failure modes of the lithium ion batteries.

Requested change 7: Finally, ALPA commented on monitoring and warning features that will indicate when the state-of-charge of the batteries has fallen below levels considered acceptable for dispatch of the airplane. The commenter suggested that the special conditions address the location of the warning indication; whether it is displayed to the captain, the crew, or both; and the training to be incorporated in the crew training programs.

FAA response: Flightdeck warning indicators associated with the state of charge of the lithium ion battery and appropriate training of the crew will be addressed during certification as part of the flight deck evaluation. As required by § 25.1309(c), this evaluation will ensure that the warning indication is effective and appropriate for the hazard.

Comments From the Civil Aviation Authority of the United Kingdom (UK CAA)

Requested change 8: In its comments to EASA, the UK CAA states that Paragraph 5 of the special conditions should be revised to read as follows:

> No fluids or gasses that may escape from any Li-ion battery may be allowed to damage surrounding aeroplane structure, or any adjacent systems or equipment, including electrical wiring, in such a way as to hazard the aeroplane.

The UK CAA indicates that Paragraph 5, as proposed, specifies that no escaping corrosive fluids or gasses may damage aeroplane structures or adjacent essential equipment. The reasons for this are obvious, and the requirement is fully supported. However, it is noted that CS/JAR 25.1309 [EASA and Joint Aviation Authority regulation 25.1309] in its title makes a distinction between equipment and systems. Thus a requirement that specifies protection only for essential equipment could be misinterpreted as not applying to essential systems. For absolute clarity, this requirement should be extended to show that it applies to both essential equipment and essential systems.

Furthermore, corrosive fluids and gasses could also damage any non-essential electrical equipment or electrical wiring in such a way as to cause short circuits or arcing that could itself pose a hazard to the aeroplane. For completeness, this requirement should also seek to preclude damage to any adjacent electrical equipment or wiring whose failure could present a hazard to the airplane.

FAA Response: The wording of Paragraph (5) is identical to that of 14 CFR 25.1353(c)(4), applicable to all batteries. For clarity, we will revise the text to read as follows:

> No corrosive fluids or gasses that may escape from any lithium ion battery may damage surrounding structure or any adjacent systems, equipment or electrical wiring of the airplane in such a way as to cause a major or more severe failure condition, in accordance with 14 CFR 25.1309 (b) and applicable regulatory guidance.

Requested change 9: The UK CAA also commented to EASA that Paragraph 9 of the Special Conditions should be revised to read ''The instructions for Continued Airworthiness, *required by 14 CFR 25.1529*, must contain maintenance requirements for * * *.''

FAA Response: The FAA concurs with this editorial comment and has revised the text of Paragraph 9 of the Special Conditions accordingly.

Applicability

As discussed above, these special conditions are applicable to the Airbus A380–800 airplane. Should Airbus apply at a later date for a change to the type certificate to include another model incorporating the same novel or unusual design features, these special conditions would apply to that model as well under the provisions of § 21.101.

Conclusion

This action affects only certain novel or unusual design features of the Airbus A380–800 airplane. It is not a rule of general applicability.

List of Subjects in 14 CFR Part 25

Aircraft, Aviation safety, Reporting and recordkeeping requirements.

■ The authority citation for these special conditions is as follows:

Authority: 49 U.S.C. 106(g), 40113, 44701, 44702, 44704.

The Special Conditions

■ Accordingly, pursuant to the authority delegated to me by the Administrator, the following special conditions are issued as part of the type certification basis for the Airbus A380–800 airplane.

In lieu of the requirements of 14 CFR 25.1353(c)(1) through (c)(4), the following special conditions apply:

Lithium-ion batteries on the Airbus Model 380–800 airplane must be designed and installed as follows:

(1) Safe cell temperatures and pressures must be maintained during any foreseeable charging or discharging condition and during any failure of the charging or battery monitoring system not shown to be extremely remote. The lithium ion battery installation must preclude explosion in the event of those failures.

(2) Design of the lithium ion batteries must preclude the occurrence of self-sustaining, uncontrolled increases in temperature or pressure.

(3) No explosive or toxic gasses emitted by any lithium ion battery in normal operation or as the result of any failure of the battery charging system, monitoring system, or battery installation—not shown to be extremely remote—may accumulate in hazardous quantities within the airplane.

(4) Installations of lithium ion batteries must meet the requirements of 14 CFR 25.863(a) through (d).

(5) No corrosive fluids or gasses that may escape from any lithium ion battery may damage surrounding structure or any adjacent systems, equipment or electrical wiring of the airplane in such a way as to cause a major or more severe failure condition, in accordance with 14 CFR 25.1309 (b) and applicable regulatory guidance.

(6) Each lithium ion battery installation must have provisions to prevent any hazardous effect on structure or essential systems caused by the maximum amount of heat the battery can generate during a short circuit of the battery or of its individual cells.

(7) Lithium ion battery installations must have a system to control the charging rate of the battery automatically, so as to prevent battery overheating or overcharging, and,

(i) A battery temperature sensing and over-temperature warning system with a means for automatically disconnecting the battery from its charging source in the event of an over-temperature condition, or,

(ii) A battery failure sensing and warning system with a means for automatically disconnecting the battery from its charging source in the event of battery failure.

(8) Any lithium ion battery installation whose function is required for safe operation of the airplane must incorporate a monitoring and warning feature that will provide an indication to the appropriate flight crewmembers, whenever the state-of-charge of the batteries has fallen below levels considered acceptable for dispatch of the airplane.

(9) The Instructions for Continued Airworthiness, required by 14 CFR 25.1529, must contain maintenance requirements for measurements of battery capacity at appropriate intervals to ensure that batteries whose function is required for safe operation of the airplane will perform their intended function as long as the battery is installed in the airplane. The Instructions for Continued Airworthiness must also contain procedures for the maintenance of lithium ion batteries in spares storage to prevent the replacement of batteries whose function is required for safe operation of the airplane with batteries that have experienced degraded charge retention ability or other damage due to prolonged storage at a low state of charge.

Note: These special conditions are not intended to replace 14 CFR 25.1353(c) in the certification basis of the Airbus A380–800 airplane. The special conditions apply only to lithium ion batteries and their installations. The requirements of 14 CFR 25.1353(c) remain in effect for batteries and battery installations of the Airbus A380–800 airplane that do not utilize lithium ion batteries.

Issued in Renton, Washington, on November 30, 2006.

Kevin Mullin,

Acting Manager, Transport Airplane Directorate, Aircraft Certification Service.

[FR Doc. E6–21188 Filed 12–12–06; 8:45 am]

BILLING CODE 4910–13–P

DEPARTMENT OF TRANSPORTATION

Federal Aviation Administration

14 CFR Part 25

[Docket No. NM313; Special Conditions No. 25–340–SC]

Special Conditions: Airbus Model A380–800 Airplane; Fire Protection

AGENCY: Federal Aviation Administration (FAA), DOT.

ACTION: Final special conditions.

SUMMARY: These special conditions are issued for the Airbus A380–800 airplane, which has novel and unusual design features, such as a full-length, double deck passenger cabin and electrical equipment bays distributed throughout the airplane. For these design features, the applicable airworthiness regulations do not contain adequate or appropriate safety standards regarding fire protection. These special conditions contain the additional safety standards that the Administrator considers necessary to establish a level of safety equivalent to that established by the existing airworthiness standards. Additional special conditions will be issued for other novel or unusual design features of the Airbus Model A380–800 airplane.

DATES: *Effective Date:* The effective date of these special conditions is November 30, 2006.

FOR FURTHER INFORMATION CONTACT: Holly Thorson, FAA, International Branch, ANM–116, Transport Airplane Directorate, Aircraft Certification Service, 1601 Lind Avenue, SW., Renton, Washington 98055–4056; telephone (425) 227–1357; facsimile (425) 227–1149.

SUPPLEMENTARY INFORMATION:

Background

Airbus applied for FAA certification/validation of the provisionally-designated Model A3XX–100 in its letter AI/L 810.0223/98, dated August 12, 1998, to the FAA. Application for certification by the Joint Aviation Authorities (JAA) of Europe had been made on January 16, 1998, reference AI/L 810.0019/98. In its letter to the FAA, Airbus requested an extension to the 5-

year period for type certification in accordance with 14 CFR 21.17(c).

The request was for an extension to a 7-year period, using the date of the initial application letter to the JAA as the reference date. The reason given by Airbus for the request for extension is related to the technical challenges, complexity, and the number of new and novel features on the airplane. On November 12, 1998, the Manager, Aircraft Engineering Division, AIR–100, granted Airbus' request for the 7-year period, based on the date of application to the JAA.

In its letter AI/LE–A 828.0040/99 Issue 3, dated July 20, 2001, Airbus stated that its target date for type certification of the Model A380–800 has been moved from May 2005, to January 2006, to match the delivery date of the first production airplane. In a subsequent letter (AI/L 810.0223/98 issue 3, dated January 7, 2006), Airbus stated that its target date for type certification is October 2, 2006. In accordance with 14 CFR 21.17(d)(2), Airbus chose a new application date of December 20, 1999, and requested that the 7-year certification period which had already been approved be continued. The FAA has reviewed the part 25 certification basis for the Model A380–800 airplane, and no changes are required based on the new application date.

The Model A380–800 airplane will be an all-new, four-engine jet transport airplane with a full double-deck, two-aisle cabin. The maximum takeoff weight will be 1.235 million pounds with a typical three-class layout of 555 passengers.

Type Certification Basis

Under the provisions of 14 CFR 21.17, Airbus must show that the Model A380–800 airplane meets the applicable provisions of 14 CFR part 25, as amended by Amendments 25–1 through 25–98. If the Administrator finds that the applicable airworthiness regulations do not contain adequate or appropriate safety standards for the Airbus A380–800 airplane because of novel or unusual design features, special conditions are prescribed under the provisions of 14 CFR 21.16.

In addition to the applicable airworthiness regulations and special conditions, the Airbus Model A380–800 airplane must comply with the fuel vent and exhaust emission requirements of 14 CFR part 34 and the noise certification requirements of 14 CFR part 36. In addition, the FAA must issue a finding of regulatory adequacy pursuant to section 611 of Public Law 93–574, the ''Noise Control Act of 1972.''

Special conditions, as defined in 14 CFR 11.19, are issued in accordance with 14 CFR 11.38 and become part of the type certification basis in accordance with 14 CFR 21.17(a)(2).

Special conditions are initially applicable to the model for which they are issued. Should the type certificate for that model be amended later to include any other model that incorporates the same novel or unusual design feature, the special conditions would also apply to the other model under the provisions of 14 CFR 21.101.

Discussion of Novel or Unusual Design Features

The Airbus Model A380–800 airplane has novel or unusual design features relative to airplanes previously certificated under 14 CFR part 25. These design features include full-length passenger cabins on the main deck and the upper deck and electrical equipment bays that are distributed throughout the airplane—on the main deck and upper deck as well as in the lower lobe.

Generally, transport category airplanes have one or two electrical equipment bays located in the lower lobe, adjacent to pressure regulator/outflow valves. If there were a fire in an electrical equipment bay, any smoke would be drawn toward the outflow valves and be discharged from the airplane without entering occupied areas. In the Airbus Model A380–800, the electrical equipment bays are distributed throughout the airplane. Only those equipment bays located in the lower lobe of the airplane are adjacent to pressure regulator/outflow valves.

For this combination of electrical equipment bays distributed throughout the airplane and a double deck passenger cabin, the applicable airworthiness regulations do not contain adequate or appropriate safety standards regarding fire protection. Based upon its review of incidents of smoke in the passenger cabin, the FAA determined that an airplane with electrical equipment bays located below, on, and above the main deck of a double deck airplane presents a greater risk of smoke penetration than older designs with equipment bays only in the lower lobe adjacent to pressure regulator/outflow valves.

In the event of a fire, airplanes with older designs rely upon ''trial and error'' to determine whether the source of fire or smoke is in the electrical equipment bay. Typically, this involves the pilots following a procedure in the Airplane Flight Manual. It may involve shutting down power to the avionics equipment in one electrical equipment bay and reconfiguring the airplane's environmental control system (*e.g.*, shutting down the recirculation fan) to see whether the amount of smoke in the flightdeck or passenger compartment is reduced or eliminated. If these actions do not eliminate the smoke, the flight crew may turn the power back on in the one electrical equipment bay, shut it off in the other equipment bay, and reconfigure the environmental control system again to see whether the smoke is now reduced or eliminated.

This approach may be acceptable for airplanes with no more than two electrical equipment bays, both located in the lower lobe. In that case, there are only two options: a fire in an electrical equipment bay is in either one or the other. However, for an airplane with electrical equipment bays located below, on, and above decks, this approach is not sufficient, because—in the time it takes to determine the source of smoke—a fire could spread and the quantity of smoke could increase significantly.

Furthermore, the ''trial and error'' approach raises concern over the lack of informational awareness that a flight crew would have should smoke penetration occur. Many factors—including the airflow pattern, configuration changes in the environmental control system, potential leak paths, and location of outflow/regulator valves—would make it difficult to identify a smoke source, especially during flight or system transients, such as climbing/descending or changes in ventilation.

Current regulations (§ 25.857) require that cargo compartments have a means to exclude hazardous quantities of smoke or fire extinguishing agent from penetrating into occupied areas of the airplane. However, there are no requirements that address the following:

- Preventing hazardous quantities of smoke or extinguishing agent originating from the electrical equipment bays from penetrating into occupied areas of the airplane;
- Installing smoke or fire detectors in electrical equipment bays; or
- Preventing hazardous quantities of smoke or extinguishing agent originating on one deck from spreading to the other deck.

The FAA believes that smoke detectors are needed in all electrical equipment bays on the A380 to ensure that the flightcrew can make an informed decision as to the source of smoke and can shut down the specific electrical equipment bay from which the smoke is coming.

These special conditions, therefore, require that there be a smoke or fire detection system in each electrical equipment bay. They also include requirements to prevent propagation of hazardous quantities of smoke or fire extinguishing agent between or throughout the passenger cabins on the main deck and the upper deck.

Discussion of Comments

Notice of Proposed Special Conditions No. 25–05–08–SC, pertaining to fire protection for the Airbus A380 airplane, was published in the **Federal Register** on August 9, 2005 (70 FR 46108). A comment was received from the Boeing Company.

Requested change 1: Boeing states that two conditions must be met in order to issue Special Conditions and that neither one is met in this case. Specifically, Boeing says that the distributed electrical equipment bays are not a novel or unusual design feature, because ''There have been remote electrical equipment bays on many previously certificated airplane models, and similar Special Conditions have not been required.'' In addition, Boeing states that the current regulations are adequate to ensure that remote electrical equipment bays are safe. Boeing concludes, therefore, that the proposed Special Conditions are neither necessary nor justified.

FAA response: The FAA does not agree. As stated above in the *Discussion of Novel or Unusual Design Features,* the FAA finds that both conditions required for issuance of a special condition are met: previous part 25 rulemaking did not envision distributed electrical equipment bays on passenger decks, and new standards are necessary to maintain the level of safety of part 25. The FAA requested that Boeing provide further corroboration of its comment that ''There have been remote electrical equipment bays on many previously certificated airplane models, and similar Special Conditions have not been required.'' Our review of the information provided by Boeing indicates that the specific design features incorporated into certain Boeing models are not the same as those on the Airbus A380. Specifically, the A380 has multiple electrical equipment bays distributed throughout the lower lobe and on and above the main deck, whereas Boeing airplanes have at most two electrical equipment bays, both located in the lower lobe.

Historically, electrical equipment bays have been located in the lower lobe, adjacent to pressure regulator/outflow valves such that any smoke in the equipment bay would be drawn toward the outflow valves and leave the airplane without entering occupied areas. The presence of electrical equipment bays on and above the main deck presents a special challenge in the event of a fire and creates uncertainty as to whether smoke will penetrate into occupied areas of the airplane.

To summarize, the FAA believes that it is appropriate to impose these special conditions for the A380–800 because:

(1) The A380–800 is a large, double deck airplane with multiple electrical equipment bays distributed throughout, *i.e.*, lower lobe, main deck, and upper deck.

(2) The A380–800 has electrical equipment bays located above the lower lobe and not adjacent to pressure regulator/outflow valves.

(3) The A380–800 has more than two electrical equipment bays.

(4) The A380–800 has electrical equipment bays located on or above passenger decks or the flight deck.

(5) An airplane with this combination of electrical equipment bays and passenger decks presents a greater risk of smoke penetration than older designs with equipment bays only in the lower lobe, adjacent to pressure regulator/outflow valves.

(6) For this combination of design features, the applicable airworthiness regulations do not contain adequate or appropriate safety standards regarding fire protection.

(7) All electrical equipment bays on the A380 should contain smoke or fire detectors to ensure that in the event of a fire in one equipment bay the flight crew has sufficient situational information to enable them to shut down the correct electrical equipment bay.

Requested change 2: Boeing objects to applying the proposed Special Conditions ''to all [electrical] equipment bays, not just the remote equipment bay(s) that the FAA has determined to be novel and inadequately covered by the existing regulations. Applying this Special Condition to the main equipment bay appears to be a form of general rulemaking via Special Condition.''

FAA response: The FAA does not agree. We contacted the Boeing Company regarding its comment and asked for clarification. It appears that Boeing's comment was focused on multiple electrical equipment bays located in the lower lobe and not the distributed electrical equipment bays in the A380 design. However, it is not only the remote electrical equipment bays which are a novel or unusual design feature. It is the combination of electrical equipment bays distributed on the main deck, the upper deck, and the lower lobe along with full-length passenger cabins on the main deck and the upper deck. This combination raises the possibility that smoke from a fire in an electrical equipment bay will penetrate into the flightdeck or into one or both passenger cabins. As noted above, the presence of smoke detectors in these equipment bays will ensure that the flight crew has sufficient situational information to enable them to shut down the correct electrical equipment bay and to prevent hazardous quantities of smoke from entering the flight deck or passenger cabins.

Based on the fact that the electrical distribution center on the A380 includes electrical equipment bays in locations where fire and smoke are more hazardous to passengers, we believe that this special condition should apply not only to electrical equipment bays on the passenger decks, but to all electrical equipment bays. To do otherwise would not protect the entire electrical distribution system when such protection could be accomplished readily.

Requested change 3: Finally, Boeing comments that the proposed Special Conditions add requirements for detecting smoke and fire and for preventing penetration of smoke and that such requirements have previously been associated with fire protection for cargo compartments, but not for electrical equipment bays. According to the commenter,

> There have been many issues raised with the smoke quantities and test methods for these tests, especially for cargo compartment tests. None of these discussions have included equipment bays as the location of the test, or the materials in the equipment bay as the fuel of the fire. Therefore, there is no agreement as to the detailed test procedures for the proposed equipment bay detection tests.

FAA response: This comment pertains to how Airbus will show compliance with the requirements to install a smoke or fire detection system in each electrical equipment bay and to prevent smoke originating from the electrical equipment bays from penetrating between or throughout passenger cabins on the main deck and the upper deck. We have discussed these issues with Airbus and with specialists within the European Aviation Safety Agency and have established appropriate test criteria through the issue paper process.

Clarification

The FAA has revised the text in the *Discussion of Novel or Unusual Design Features* to clarify that the special conditions apply to propagation of

smoke or extinguishing agents between or throughout the main deck and upper deck passenger cabins. Similarly, we have revised the text of Special Condition a.2.(c) to clarify that smoke from a source below the main deck must not rise above armrest height on the main deck.

Applicability

As discussed above, these special conditions are applicable to the Airbus A380–800 airplane. Should Airbus apply at a later date for a change to the type certificate to include another model incorporating the same novel or unusual design features, these special conditions would apply to that model as well under the provisions of § 21.101.

Conclusion

This action affects only certain novel or unusual design features of the Airbus A380–800 airplane. It is not a rule of general applicability.

List of Subjects in 14 CFR Part 25

Aircraft, Aviation safety, Reporting and recordkeeping requirements.

■ The authority citation for these special conditions is as follows:

Authority: 49 U.S.C. 106(g), 40113, 44701, 44702, 44704.

The Special Conditions

■ Accordingly, pursuant to the authority delegated to me by the Administrator, the following special conditions are issued as part of the type certification basis for the Airbus A380–800 airplane.

a. Requirements to prevent propagation of smoke or extinguishing agents between or throughout main deck and upper deck passenger cabins:

1. To prevent such propagation, the following must be demonstrated:

(a) Means to prevent hazardous quantities of smoke or extinguishing agent originating from the electrical equipment bays from incapacitating passengers and crew, and

(b) Means to prevent hazardous quantities of smoke or extinguishing agent originating from one deck from propagating to the other deck via vents, stairways, and joints in the floor/ceiling.

2. A ''small quantity'' of smoke may enter an occupied area only under the following conditions:

(a) The smoke enters occupied areas during system transients [1] from below deck sources. No sustained smoke penetration beyond that from environmental control system transients is permitted.

(b) Penetration of the small quantity of smoke is a dynamic event, involving either dissipation or mobility. Dissipation is rapid dilution of the smoke by ventilation air, and mobility is rapid movement of the smoke into and out of the occupied area. In no case, should there be formation of a light haze indicative of stagnant airflow, as this would indicate that the ventilation system is failing to meet the requirements of § 25.831(b).

(c) The smoke from a smoke source below the main deck must not rise above armrest height on the main deck.

(d) The smoke from a source on the same deck or above the deck must dissipate rapidly via dilution with fresh air and be evacuated from the airplane. A procedure must be included in the Airplane Flight Manual to evacuate smoke from the occupied areas of the airplane. In order to demonstrate that the quantity of smoke is small, a flight test must be conducted which simulates the emergency procedures used in the event of a fire during flight, including the use of V_{mo}/M_{mo} descent profiles and a simulated landing, if such conditions are specified in the emergency procedure.

b. Requirement for fire detection in electrical equipment bays:

A smoke or fire detection system that complies with 14 CFR 25.858(c) and (d) must be provided for each electrical equipment bay. Each system must provide a visual indication to the flight deck within one minute after the start of a fire in an electrical equipment bay. Airplane tests must be conducted to show compliance with this requirement, and the performance of the smoke or fire detection system must be shown, in accordance with Advisory Circular 25–9A or by other means acceptable to the FAA.

Issued in Renton, Washington, on November 30, 2006.

Kevin Mullin,

Acting Manager, Transport Airplane Directorate, Aircraft Certification Service.

[FR Doc. E6–21191 Filed 12–12–06; 8:45 am]

BILLING CODE 4910–13–P

[1] Transient airflow conditions may cause air pressure differences between compartments, before the ventilation and pressurization system is reconfigured. Additional transients occur during changes to system configurations such as pack shut-down, fan shut-down, or changes in cabin altitude; transition in bleed source change, such as from intermediate stage to high stage bleed air; and cabin pressurization ''fly-through'' during descent may reduce air conditioning inflow. Similarly, in the event of a fire, a small quantity of smoke that penetrates into an occupied area before the ventilation system is reconfigured would be acceptable under certain conditions described within this special condition.

DEPARTMENT OF TRANSPORTATION

Federal Aviation Administration

14 CFR Part 71

[Docket No. FAA–2006–25270; Airspace Docket No. 06–ASO–9]

Establishment of Class D Airspace; Eastman, GA; Correction

AGENCY: Federal Aviation Administration (FAA), DOT.

ACTION: Correcting amendment.

SUMMARY: This document contains a correction to the final rule (FAA–2006–25270; 06–ASO–9), which was published in the **Federal Register** on November 30, 2006 (71 FR 69191), establishing Class D airspace at Eastman, GA. This action corrects the effective date of the Class D airspace.

DATES: *Effective Date:* December 13, 2006.

FOR FURTHER INFORMATION CONTACT: Mark D. Ward, Group Manager, System Support, Eastern Service Center, Federal Aviation Administration, P.O. Box 20636, Atlanta, Georgia 30320; telephone (404) 305–5627.

SUPPLEMENTARY INFORMATION:

Background

Federal Register Document 06–9232, Docket No. FAA–2006–252760; Airspace Docket 06–ASO–9, published on November 30, 2006 (71 FR 69191), establishes Class D airspace at Eastman, GA. This action corrects the published docket.

Designations for Class D airspace are published in Paragraph 5000 of FAA Order 7400.9P, dated September 1, 2006, and effective September 15, 2006, which is incorporated by reference in 14 CFR 71.1. The Class D airspace designation listed in this document will be published subsequently in the Order.

Need for Correction

As published, the final rule contains an error, which incorrectly states the effective date of the Class D airspace. Accordingly, pursuant to the authority delegated to me, the effective date for the establishment of Class D airspace at Eastman, GA, incorporated by reference at § 71.1, 14 CFR 71.1, and published in the **Federal Register** on November 30, 2006 (71 FR 69191), is corrected by making the following correcting amendment.

List of Subjects in 14 CFR Part 71

Airspace, incorporation by reference, Navigation (air).

■ In consideration of the foregoing, the Federal Aviation Administration

corrects the adopted amendment, 14 CFR part 71, by making the following correcting amendment:

PART 71—DESIGNATION OF CLASS A, CLASS B, CLASS C, CLASS D, AND CLASS E AIRSPACE AREAS; AIRWAYS; ROUTES; AND REPORTING POINTS

■ 1. The authority citation for part 71 continues to read as follows:

Authority: 49 U.S.C. 106(g); 40103, 40113, 40120; E.O. 10854, 24 FR 9565, 3 CFR, 1959–1963 Comp., p. 389.

§ 71.1 [Corrected]

■ 2. The incorporation by reference in 14 CFR 71.1 or Federal Aviation Administration Order 7400.9P, Airspace Designations and Reporting Points, dated September 1, 2006, and effective September 15, 2006, is amended as follows:

Paragraph 5000 Class D Airspace.

* * * * *

ASO GA D Eastman, GA [Corrected]

On page 69191, column 2, line 4 of the Effective Date, correct the year, changing ''2000'' to ''2007''.

* * * * *

Issued in College Park, Georgia, on December 6, 2006.

Stephen Prater,

Acting Manager, System Support Group, Eastern Service Center.

[FR Doc. 06–9662 Filed 12–12–06; 8:45 am]

BILLING CODE 4910–13–M

DEPARTMENT OF TRANSPORTATION

Federal Aviation Administration

14 CFR Part 97

[Docket No. 30526; Amdt. No. 3197]

Standard Instrument Approach Procedures; Miscellaneous Amendments

AGENCY: Federal Aviation Administration (FAA), DOT.

ACTION: Final rule.

SUMMARY: This amendment amends Standard Instrument Approach Procedures (SIAPs) for operations at certain airports. These regulatory actions are needed because of changes occurring in the National Airspace System, such as the commissioning of new navigational facilities, addition of new obstacles, or changes in air traffic requirements. These changes are designed to provide safe and efficient use of the navigable airspace and to promote safe flight operations under instrument flight rules at the affected airports.

DATES: This rule is effective December 13, 2006. The compliance date for each SIAP is specified in the amendatory provisions.

The incorporation by reference of certain publications listed in the regulations is approved by the Director of the **Federal Register** as of December 13, 2006.

ADDRESSES: Availability of matter incorporated by reference in the amendment is as follows:

For Examination—

1. FAA Rules Docket, FAA Headquarters Building, 800 Independence Ave, SW., Washington, DC 20591;

2. The FAA Regional Office of the region in which affected airport is located; or

3. The National Flight Procedures Office, 6500 South MacArthur Blvd., Oklahoma City, OK 73169 or,

4. The National Archives and Records Administration (NARA). For information on the availability of this material at NARA, call 202–741–6030, or go to: *http://www.archives.gov/federal_register/code_of_federal_regulations/ibr_locations.html.*

For Purchase—Individual SIAP copies may be obtained from:

1. FAA Public Inquiry Center (APA–200), FAA Headquarters Building, 800 Independence Avenue, SW., Washington, DC 20591; or

2. The FAA Regional Office of the region in which the affected airport is located.

By Subscription—Copies of all SIAPs, mailed once every 2 weeks, are for sale by the Superintendent of Documents, U.S. Government Printing Office, Washington, DC 20402.

FOR FURTHER INFORMATION CONTACT: Donald P. Pate, Flight Procedure Standards Branch (AFS–420), Flight Technologies and Programs Division, Flight Standards Service, Federal Aviation Administration, Mike Monroney Aeronautical Center, 6500 South MacArthur Blvd., Oklahoma City, OK 73169 (Mail Address: P.O. Box 25082, Oklahoma City, OK 73125); telephone: (405) 954–4164.

SUPPLEMENTARY INFORMATION: This amendment to Title 14, Code of Federal Regulations, part 97 (14 CFR part 97) amends Standard Instrument Approach Procedures (SIAPs). The complete regulatory description of each SIAP is contained in the appropriate FAA Form 8260, as modified by the the National Flight Data Center (FDC)/Permanent Notice to Airmen (P–NOTAM), which is incorporated by reference in the amendment under 5 U.S.C. 552(a), 1 CFR part 51, and § 97.20 of the Code of Federal Regulations. Materials incorporated by reference are available for examination or purchase as stated above.

The large number of SIAPs, their complex nature, and the need for a special format make their verbatim publication in the **Federal Register** expensive and impractical. Further, airmen do not use the regulatory text of the SIAPs, but refer to their graphic depiction on charts printed by publishers of aeronautical materials. Thus, the advantages of incorporation by reference are realized and publication of the complete description of each SIAP contained in FAA form documents is unnecessary. The provisions of this amendment state the affected CFR sections, with the types and effective dates of the SIAPs. This amendment also identifies the airport, its location, the procedure identification and the amendment number.

The Rule

This amendment to 14 CFR part 97 is effective upon publication of each separate SIAP as amended in the transmittal. For safety and timeliness of change considerations, this amendment incorporates only specific changes contained for each SIAP as modified by FDC/P–NOTAMs.

The SIAPs, as modified by FDC P–NOTAM, and contained in this amendment are based on the criteria contained in the U.S. Standard for Terminal Instrument Procedures (TERPS). In developing these chart changes to SIAPs, the TERPS criteria were applied to only these specific conditions existing at the affected airports. All SIAP amendments in this rule have been previously issued by the FAA in a FDC NOTAM as an emergency action of immediate flight safety relating directly to published aeronautical charts. The circumstances which created the need for all these SIAP amendments requires making them effective in less than 30 days.

Further, the SIAPs contained in this amendment are based on the criteria contained in TERPS. Because of the close and immediate relationship between these SIAPs and safety in air commerce, I find that notice and public procedure before adopting these SIAPs are impracticable and contrary to the public interest and, where applicable, that good cause exists for making these SIAPs effective in less than 30 days.

Conclusion

The FAA has determined that this regulation only involves an established body of technical regulations for which frequent and routine amendments are necessary to keep them operationally current. It, therefore—(1) is not a ''significant regulatory action'' under Executive Order 12866; (2) is not a ''significant rule'' under DOT Regulatory Policies and Procedures (44 FR 11034; February 26, 1979); and (3) does not warrant preparation of a regulatory evaluation as the anticipated impact is so minimal. For the same reason, the FAA certifies that this amendment will not have a significant economic impact on a substantial number of small entities under the criteria of the Regulatory Flexibility Act.

List of Subjects in 14 CFR Part 97

Air Traffic Control, Airports, Incorporation by reference, and Navigation (Air).

Issued in Washington, DC on December 1, 2006.

James J. Ballough,

Director, Flight Standards Service.

Adoption of the Amendment

■ Accordingly, pursuant to the authority delegated to me, Title 14, Code of Federal regulations, Part 97, 14 CFR part 97, is amended by amending Standard Instrument Approach Procedures, effective at 0901 UTC on the dates specified, as follows:

PART 97—STANDARD INSTRUMENT APPROACH PROCEDURES

■ 1. The authority citation for part 97 continues to read as follows:

Authority: 49 U.S.C. 106(g), 40103, 40106, 40113, 40114, 40120, 44502, 44514, 44701, 44719, 44721–44722.

■ 2. Part 97 is amended to read as follows:

§§ 97.23, 97.25, 97.27; 97.29, 97.31, 97.33, 97.35 [Amended]

By amending: § 97.23 VOR, VOR/DME, VOR or TACAN, and VOR/DME or TACAN; § 97.25 LOC, LOC/DME, LDA, LDA/DME, SDF, SDF/DME; § 97.27 NDB, NDB/DME; § 97.29 ILS, ILS/DME, ISMLS, MLS/DME, MLS/RNAV; § 97.31 RADAR SIAPs; § 97.33 RNAV SIAPs; and § 97.35 COPTER SIAPs, Identified as follows:

** * * Effective Upon Publication*

FDC Date	State	City	Airport	FDC NO.	Subject
11/16/06	IA	CORNING	CORNING MUNI	6/6357	NDB OR GPS RWY 17, AMDT 1
11/16/06	MO	CASSVILLE	CASSVILLE MUNI	6/6358	VOR OR GPS RWY 8, AMDT 1B
11/16/06	IA	SIOUX CENTER	SIOUX CENTER MUNI	6/6359	NDB OR GPS RWY 17, AMDT 4
11/16/06	IN	CONNERSVILLE	METTLE FIELD	6/6412	VOR A, AMDT 1
11/20/06	CA	SACRAMENTO	MCCLELLAN AIRFIELD	6/6587	VOR/DME OR TACAN RWY 16, ORIG–A
11/20/06	CA	SACRAMENTO	MCCLELLAN AIRFIELD	6/6588	VOR/DME OR TACAN RWY 34, ORIG–A
11/14/06	ME	PORTLAND	PORTLAND INTL JETPORT	6/6193	THIS NOTAM CORRECTS FDC 6/6193 PUBLISHED IN TL06–26. ILS OR LOC RWY 11, ILS RWY 11 (CAT II), ILS RWY 11 (CAT III), AMDT 2
11/20/06	KS	PITTSBURG	ATKINSON MUNI	6/6602	VOR/DME RWY 3, AMDT 3
11/20/06	TX	AMARILLO	TRADEWIND	6/6603	NDB A, AMDT 14
11/20/06	TX	AMARILLO	TRADEWIND	6/6604	GPS RWY 35, ORIG–A
11/24/06	MO	ST LOUIS	LAMBERT-ST LOUIS INTL	6/6822	ILS OR LOC RWY 6 AMDT 1
11/22/06	GA	SAVANNAH	SAVANNAH/HILTON HEAD INTL	6/6702	VOR/DME OR TACAN RWY 36, ORIG
11/22/06	CO	HAYDEN	YAMPA VALLEY	6/6578	ILS OR LOC/DME Y RWY 10, AMDT 2
11/27/06	OR	ASTORIA	ASTORIA REGIONAL	6/6918	ILS RWY 26, AMDT 2A
11/27/06	WA	WALLA WALLA	WALLA WALLA REGIONAL	6/6922	NDB RWY 20, AMDT 5
11/27/06	WA	WALLA WALLA	WALLA WALLA REGIONAL	6/6923	ILS OR LOC RWY 20, AMDT 8
11/27/06	WA	WALLA WALLA	WALLA WALLA REGIONAL	6/6924	RNAV (GPS) RWY 20, ORIG
11/27/06	OR	PORTLAND PORTLA	ND-HILLSBORO	6/6925	ILS OR LOC RWY 12, AMDT 8A
11/27/06	UT	WENDOVER	WENDOVER	6/6926	VOR/DME OR TACAN–B, ORIG
11/27/06	WY	CASPER	NATRONA COUNTY INTL	6/6962	RNAV (GPS) RWY 21, AMDT 1
11/27/06	WY	CASPER	NATRONA COUNTY INTL	6/6968	VOR/DME OR TACAN RWY 21, AMDT 8
11/28/06	MT	BOZEMAN	GALLATIN FIELD	6/7034	VOR/DME OR GPS RWY 12, AMDT 2

[FR Doc. E6–20941 Filed 12–12–06; 8:45 am]
BILLING CODE 4910–13–P

DEPARTMENT OF TRANSPORTATION

Federal Aviation Administration

14 CFR Part 97

[Docket No. 30525 Amdt. No. 3196]

Standard Instrument Approach Procedures, Weather Takeoff Minimums; Miscellaneous Amendments

AGENCY: Federal Aviation Administration (FAA), DOT.

ACTION: Final rule.

SUMMARY: This amendment establishes, amends, suspends, or revokes Standard Instrument Approach Procedures (SIAPs) and/or Weather Takeoff Minimums for operations at certain airports. These regulatory actions are needed because of the adoption of new or revised criteria, or because of changes occurring in the National Airspace System, such as the commissioning of new navigational facilities, addition of new obstacles, or changes in air traffic requirements. These changes are designed to provide safe and efficient use of the navigable airspace and to promote safe flight operations under instrument flight rules at the affected airports.

DATES: This rule is effective December 13, 2006. The compliance date for each SIAP and/or Weather Takeoff Minimums is specified in the amendatory provisions.

The incorporation by reference of certain publications listed in the regulations is approved by the Director of the Federal Register as of December 13, 2006.

ADDRESSES: Availability of matters incorporated by reference in the amendment is as follows:

For Examination—

1. FAA Rules Docket, FAA Headquarters Building, 800 Independence Avenue, SW., Washington, DC 20591;
2. The FAA Regional Office of the region in which the affected airport is located;
3. The National Flight Procedures Office, 6500 South MacArthur Blvd., Oklahoma City, OK 73169 or,
4. The National Archives and Records Administration (NARA). For information on the availability of this material at NARA, call 202–741–6030, or go to: *http://www.archives.gov/federal_register/code_of_federal_regulations/ibr_locations.html.*

For Purchase—Individual SIAP and Weather Takeoff Minimums copies may be obtained from:

1. FAA Public Inquiry Center (APA–200), FAA Headquarters Building, 800 Independence Avenue, SW., Washington, DC 20591; or
2. The FAA Regional Office of the region in which the affected airport is located.

By Subscription—Copies of all SIAPs and Weather Takeoff Minimums mailed once every 2 weeks, are for sale by the Superintendent of Documents, U.S. Government Printing Office, Washington, DC 20402.

FOR FURTHER INFORMATION CONTACT: Donald P. Pate, Flight Procedure Standards Branch (AFS–420), Flight Technologies and Programs Division, Flight Standards Service, Federal Aviation Administration, Mike Monroney Aeronautical Center, 6500 South MacArthur Blvd., Oklahoma City, OK 73169 (Mail Address: P.O. Box 25082 Oklahoma City, OK 73125) telephone: (405) 954–4164.

SUPPLEMENTARY INFORMATION: This amendment to Title 14 of the Code of Federal Regulations, Part 97 (14 CFR part 97), establishes, amends, suspends, or revokes SIAPs and/or Weather Takeoff Minimums. The complete regulatory description of each SIAP and/or Weather Takeoff Minimums is contained in official FAA form documents which are incorporated by reference in this amendment under 5 U.S.C. 552(a), 1 CFR part 51, and 14 CFR part 97.20. The applicable FAA Forms are identified as FAA Forms 8260–3, 8260–4, 8260–5 and 8260–15A. Materials incorporated by reference are available for examination or purchase as stated above.

The large number of SIAPs and/or Weather Takeoff Minimums, their complex nature, and the need for a special format make their verbatim publication in the **Federal Register** expensive and impractical. Further, airmen do not use the regulatory text of the SIAPs and/or Weather Takeoff Minimums but refer to their depiction on charts printed by publishers of aeronautical materials. Thus, the advantages of incorporation by reference are realized and publication of the complete description of each SIAP and/or Weather Takeoff Minimums contained in FAA form documents is unnecessary. The provisions of this amendment state the affected CFR sections, with the types and effective dates of the SIAPs and/or Weather Takeoff Minimums. This amendment also identifies the airport, its location, the procedure identification and the amendment number.

The Rule

This amendment to 14 CFR part 97 is effective upon publication of each separate SIAP and/or Weather Takeoff Minimums as contained in the transmittal. Some SIAP and/or Weather Takeoff Minimums amendments may have been previously issued by the FAA in a Flight Data Center (FDC) Notice to Airmen (NOTAM) as an emergency action of immediate flight safety relating directly to published aeronautical charts. The circumstances which created the need for some SIAP, and/or Weather Takeoff Minimums amendments may require making them effective in less than 30 days. For the remaining SIAPs and/or Weather Takeoff Minimums, an effective date at least 30 days after publication is provided.

Further, the SIAPs and/or Weather Takeoff Minimums contained in this amendment are based on the criteria contained in the U.S. Standard for Terminal Instrument Procedures (TERPS). In developing these SIAPs and/or Weather Takeoff Minimums, the TERPS criteria were applied to the conditions existing or anticipated at the affected airports. Because of the close and immediate relationship between these SIAPs and/or Weather Takeoff Minimums and safety in air commerce, I find that notice and public procedure before adopting these SIAPs and/or Weather Takeoff Minimums are impracticable and contrary to the public interest and, where applicable, that good cause exists for making some SIAPs and/or Weather Takeoff Minimums effective in less than 30 days.

Conclusion

The FAA has determined that this regulation only involves an established body of technical regulations for which frequent and routine amendments are necessary to keep them operationally current. It, therefore—(1) is not a ''significant regulatory action'' under Executive Order 12866; (2) is not a ''significant rule'' under DOT Regulatory Policies and Procedures (44 FR 11034; February 26, 1979); and (3) does not warrant preparation of a regulatory evaluation as the anticipated impact is so minimal. For the same reason, the FAA certifies that this amendment will not have a significant economic impact on a substantial number of small entities under the criteria of the Regulatory Flexibility Act.

List of Subjects in 14 CFR Part 97

Air Traffic Control, Airports, Incorporation by reference, and Navigation (Air).

Issued in Washington, DC on December 1, 2006.

James J. Ballough,

Director, Flight Standards Service.

Adoption of the Amendment

■ Accordingly, pursuant to the authority delegated to me, under Title 14, Code of Federal Regulations, Part 97 (14 CFR part 97) is amended by establishing, amending, suspending, or revoking Standard Instrument Approach Procedures and Weather Takeoff Minimums effective at 0901 UTC on the dates specified, as follows:

PART 97—STANDARD INSTRUMENT APPROACH PROCEDURES

■ 1. The authority citation for part 97 continues to read as follows:

Authority: 49 U.S.C. 106(g), 40103, 40106, 40113, 40114, 40120, 44502, 44514, 44701, 44719, 44721–44722.

■ 2. Part 97 is amended to read as follows:

Effective 21 December 2006

Lynchburg, VA, Falwell, RNAV (GPS) RWY 28, Orig

Effective 18 January 2007

Deadhorse, AK, Deadhorse, ILS OR LOC/DME RWY 4, Amdt 1
Deadhorse, AK, Deadhorse, Takeoff Minimums & Textual DPs, Orig
Homer, AK, Homer, RNAV (GPS) Y RWY 21, Orig
Homer, AK, Homer, RNAV (GPS) Y RWY 3, Orig
Homer, AK, Homer, GPS RWY 21, Orig-B, CANCELLED
Homer, AK, Homer, GPS RWY 3, Orig-B, CANCELLED
Juneau, AK, Juneau Intl, RNAV (GPS) V RWY 8, Amdt 1
Juneau, AK, Juneau Intl, LDA X RWY 8, Amdt 11
Juneau, AK, Juneau Intl, Takeoff Minimums & Textual DPs, Amdt 3
Northway, AK, Northway, RNAV(GPS) RWY 5, Orig
Northway, AK, Northway, RNAV(GPS) RWY 23, Orig
Northway, AK, Northway, NDB OR GPS RWY 4, Orig, CANCELLED
Northway, AK, Northway, NDB OR GPS RWY 22, Orig, CANCELLED
Northway, AK, Northway, VOR–B, Amdt 3, CANCELLED
Northway, AK, Northway, VOR/DME–A, Amdt 1
Northway, AK, Northway, Takeoff Minimums & Textual DPs, Amdt 2
Perryville, AK, Perryville, RNAV (GPS) RWY 2, Orig
Perryville, AK, Perryville, RNAV (GPS) RWY 3, Orig, CANCELLED
Perryville, AK, Perryville, Takeoff Minimums & Textual DPs, Amdt 1
Sitka, AK, Sitka Rocky Gutierrez, Takeoff Minimums & Textual DPs, Amdt 3
Togiak Village, AK, Togiak, Takeoff Minimums & Textual DPs, Amdt 1
Oakland, CA, Metropolitan Oakland Intl, ILS OR LOC/DME RWY 27R, Amdt 35
Sacramento, CA, Sacramento Mather, RNAV (GPS) RWY 4R, Amdt 1
Albany, GA, Southwest Georgia Regional, RNAV (GPS) RWY 22, Orig
Albany, GA, Southwest Georgia Regional, RNAV (GPS) RWY 16, Orig
Albany, GA, Southwest Georgia Regional, RNAV (GPS) RWY 4, Orig
Albany, GA, Southwest Georgia Regional, RNAV (GPS) RWY 34, Orig
Albany, GA, Southwest Georgia Regional, Takeoff Minimums and Textual DP, Orig
Valdosta, GA, Valdosta Regional, RNAV (GPS) RWY 17, Orig
Valdosta, GA, Valdosta Regional, VOR RWY 17, Amdt 1
Valdosta, GA, Valdosta Regional, Takeoff Minimums and Textual DP, Orig
Hailey, ID, Friedman Memorial, RNAV (RNP) Z RWY 31, Orig, CANCELLED
Peru, IN, Peru Muni, RNAV (GPS) RWY 1, Orig
Peru, IN, Peru Muni, RNAV (GPS) RWY 19, Orig
Peru, IN, Peru Muni, VOR RWY 1, Amdt 8
Peru, IN, Peru Muni, Takeoff Minimums and Textual DPs, Amdt 3
Portland, IN, Portland Muni, NDB OR GPS RWY 9, Amdt 2A, CANCELLED
Portland, IN, Portland Muni, NDB RWY 27, Amdt 7A, CANCELLED
Creston, IA, Creston Muni, RNAV (GPS) RWY 16, Orig
Creston, IA, Creston Muni, RNAV (GPS) RWY 34, Orig
Creston, IA, Creston Muni, NDB RWY 34, Amdt 2
Creston, IA, Creston Muni, Takeoff Minimums and Textual DPs, Amdt 2
Des Moines, IA, Des Moines Intl, RNAV (GPS) RWY 5, Amdt 1
Des Moines, IA, Des Moines Intl, RNAV (GPS) RWY 13, Amdt 1
Des Moines, IA, Des Moines Intl, RNAV (GPS) RWY 31, Amdt 1
Iowa City, IA, Iowa City Muni, VOR–A, Orig
Iowa City, IA, Iowa City Muni, VOR OR GPS RWY 36, Amdt 10C, CANCELLED
Iowa City, IA, Iowa City Muni, Takeoff Minimums and Textual DPs, Amdt 3
Phillipsburg, KS, Phillipsburg Muni, RNAV (GPS) RWY 13, Amdt 1
Phillipsburg, KS, Phillipsburg Muni, RNAV (GPS) RWY 31, Amdt 1
Phillipsburg, KS, Phillipsburg Muni, Takeoff Minimums and Textual DP, Orig
Opelousas, LA, St Landry Parish-Ahart Field, RNAV (GPS) RWY 18, Orig
Opelousas, LA, St Landry Parish-Ahart Field, RNAV (GPS) RWY 36, Orig
Opelousas, LA, St Landry Parish-Ahart Field, NDB RWY 18, Amdt 2
Opelousas, LA, St Landry Parish-Ahart Field, VOR/DME RWY 36, Amdt 1
Opelousas, LA, St Landry Parish-Ahart Field, GPS RWY 35, Orig-A, CANCELLED
Minneapolis, MN, Anoka County-Blaine Arpt (Janes Field), ILS OR LOC/DME RWY 27, Orig
Minneapolis, MN, Anoka County-Blaine Arpt (Janes Field), RNAV (GPS) RWY 27, Orig
Minneapolis, MN, Anoka County-Blaine Arpt (Janes Field), GPS RWY 27, Orig CANCELLED
Minneapolis, MN, Anoka County-Blaine Arpt (Janes Field), Takeoff Minimums & Textual DPs, Amdt 4
Sidney, NE, Sidney Muni/Lloyd W. Carr Field, RNAV (GPS) RWY 12, Amdt 1
Sidney, NE, Sidney Muni/Lloyd W. Carr Field, RNAV (GPS) RWY 30, Amdt 1
Sidney, NE, Sidney Muni/Lloyd W. Carr Field, Takeoff Minimums and Textual DPs, Orig
Thedford, NE, Thomas County, RNAV (GPS) RWY 11, Orig
Thedford, NE, Thomas County, RNAV (GPS) RWY 29, Orig
Thedford, NE, Thomas County, VOR RWY 11, AMDT 1
Thedford, NE, Thomas County, VOR/DME RWY 29, Orig,
Thedford, NE, Thomas County, GPS RWY 11, Orig, CANCELLED
Thedford, NE, Thomas County, GPS RWY 29, Orig, CANCELLED
Thedford, NE, Thomas County, Takeoff Minimums and Textual DPs, Orig
Manchester, NH, Manchester, ILS OR LOC RWY 6, Amdt 1A
Manchester, NH, Manchester, RNAV (GPS) RWY 6, Amdt 1
Albany, NY, Albany Intl, ILS OR LOC RWY 1, Amdt 10
Albany, NY, Albany Intl, ILS OR LOC RWY 19, Amdt 22
New York, NY, LaGuardia, RNAV (GPS)–B, Orig
New York, NY, LaGuardia, Takeoff Minimums and Textual DPs, Amdt 7
Elizabeth City, NC, Elizabeth City CG Air Station/Regional, RNAV (GPS) RWY 10, Amdt 1
Myerstown, PA, Deck, RNAV (GPS) RWY 19, Orig
Anderson, SC, Anderson Rgnl, ILS OR LOC RWY 5, Amdt 1
Anderson, SC, Anderson Rgnl, Takeoff Minimums and Textual DP, Orig
Kingstree, SC, Williamsburg Regional, RNAV (GPS) RWY 32, Orig
Kingstree, SC, Williamsburg Regional, NDB RWY 14, Amdt 4
Kingstree, SC, Williamsburg Regional, Takeoff Minimums and Textual DP, Amdt 1
San Antonio, TX, Boerne Stage Field, RNAV (GPS) RWY 17, ORIG
San Antonio, TX, Boerne Stage Field, RNAV (GPS) RWY 35, ORIG
San Antonio, TX, Boerne Stage Field, Takeoff Minimums and Textual DP's, Orig
Galax/Hillsville, VA, Twin County, RNAV (GPS) RWY 1, Orig
Galax/Hillsville, VA, Twin County, RNAV (GPS) RWY 19, Orig
Marion/Wytheville, VA, Mountain Empire, RNAV (GPS) RWY 26, Orig
Marion/Wytheville, VA, Mountain Empire, GPS RWY 26, Orig-A, CANCELLED
Norfolk, VA, Norfolk Intl, Takeoff Minimums and Textual DP's, Orig
Lyndonville, VT, Caledonia County, NDB RWY 2, Amdt 4
Lyndonville, VT, Caledonia County, RNAV (GPS) RWY 2, Orig

Lyndonville, VT, Caledonia County, GPS RWY 2, Orig, CANCELLED
Lyndonville, VT, Caledonia County, Takeoff Minimums and Textual DP, Amdt 5
Seattle, WA, Seattle-Tacoma Intl, RNAV (GPS) RWY 16L, Amdt 1
Seattle, WA, Seattle-Tacoma Intl, ILS OR LOC RWY 16L, ILS RWY 16L(CAT II), ILS RWY 16L (CAT III), Amdt 3
Green Bay, WI, Austin Straubel International, RNAV (GPS) RWY 18, Amdt 1
Green Bay, WI, Austin Straubel International, RNAV (GPS) RWY 36, Amdt 2
Green Bay, WI, Austin Straubel International, VOR/DME OR TACAN RWY 36, Amdt 9
Fairmont, WV, Fairmont Muni-Frankman Field, RNAV (GPS) RWY 22, Orig
Fairmont, WV, Fairmont Muni-Frankman Field, GPS RWY 22, Amdt 1, CANCELLED
Fairmont, WV, Fairmont Muni-Frankman Field, Takeoff Minimums and Textual DP's, Amdt 5
Morgantown, WV, Morgantown Muni-Walter L. Bill Hart Field, ILS OR LOC RWY 18, Amdt 13
Morgantown, WV, Morgantown Muni-Walter L. Bill Hart Field, VOR–A, Amdt 13
Morgantown, WV, Morgantown Muni-Walter L. Bill Hart Field, RNAV (GPS) RWY 18, Amdt 2
Morgantown, WV, Morgantown Muni-Walter L. Bill Hart Field, RNAV (GPS) RWY 36, Orig
Evanston, WY, Evanston-Uinta County Burns Field, ILS OR LOC/DME RWY 23, Orig
Jackson, WY, Jackson Hole, RNAV (RNP) Y RWY 1, Orig
Jackson, WY, Jackson Hole, RNAV (RNP) Z RWY 1, Orig
Jackson, WY, Jackson Hole, RNAV (RNP) Z RWY 19, Orig

[FR Doc. E6–20919 Filed 12–12–06; 8:45 am]

BILLING CODE 4910–13–P

DEPARTMENT OF HEALTH AND HUMAN SERVICES

Food and Drug Administration

21 CFR Parts 25, 500, 514, and 558

[Docket No. 1999N–1415] (formerly Docket No. 99N–1415)

RIN 0910–AF59

Supplements and Other Changes to Approved New Animal Drug Applications

AGENCY: Food and Drug Administration, HHS.

ACTION: Final rule.

SUMMARY: The Food and Drug Administration (FDA) is amending its regulations on supplements and other changes to approved new animal drug applications (NADAs) or abbreviated new animal drug applications (ANADAs) to implement the manufacturing changes provision of the Food and Drug Administration Modernization Act of 1997 (the Modernization Act). The final rule requires manufacturers to assess the effect of a manufacturing change on the identity, strength, quality, purity, and potency of a drug as those factors relate to the safety or effectiveness of the drug. The final rule sets forth requirements for changes requiring submission and approval of a supplement before the distribution of the drug made using the change, changes requiring the submission of a supplement at least 30 days prior to the distribution of the drug, changes requiring the submission of a supplement at the time of distribution of the drug, and changes to be described in an annual report.

DATES: The final rule is effective February 12, 2007.

FOR FURTHER INFORMATION CONTACT: Dennis M. Bensley, Jr., Center for Veterinary Medicine (HFV–140), Food and Drug Administration, 7500 Standish Pl., Rockville, MD 20855, 301–827–6956, E-mail: *dennis.bensley@fda.hhs.gov*.

SUPPLEMENTARY INFORMATION:

Table of Contents

I. Background
A. Development of the Regulation
B. Risk-Based Approach
II. Harmonization and Highlights of Revisions to the Proposed Rule
A. Section 514.8(a)—Definitions
B. Section 514.8(b)—Manufacturing Changes to an Approved Application Manufacturing Changes Requiring Preapproval of a Supplement (Proposed § 514.8(b)(1)(ii))
C. Labeling and Other Changes to an Approved Application
III. Responses to Comments on the Propose Rule
A. Section 514.8(a)—Definitions
B. Section 514.8(b)—Manufacturing Changes to an Approved Application
C. Changes Requiring Submission and Approval of a Supplement Prior to Distribution of the Drug Made Using the Change (Major Changes)
D. Changes Requiring Submission of a Supplement at Least 30 Days Prior to Distribution of the Drug Made Using the Change (Moderate Changes)
E. Changes and Updated Stability Data to be Described and Submitted in and Annual Report (Minor Changes)
F. Labeling and Other Changes to an Approved Application
G. Implementation of the Final Rule and Guidance
H. General Comments
IV. Unrelated Referenced Comments to the Proposed Rule
V. Conforming Amendments
VI. Environmental Impact
VII. Analysis of Impacts
VIII. Paperwork Reduction Act of 1995
IX. Federalism
X. References

I. Background

Section 116 of the Modernization Act (Public Law 105–115) amended the Federal Food, Drug, and Cosmetic Act (the act) by adding section 506A (21 U.S.C. 356a). That section describes requirements and procedures for making and reporting manufacturing changes to approved new drug and abbreviated new drug applications, to approved new animal drug and abbreviated new animal drug applications, and to license applications for biological products under section 351 of the Public Health Service (PHS) Act. Section 506A of the act revises current procedures for approving manufacturing changes. Major manufacturing changes, as defined in section 506A, are of a type determined by FDA to have a substantial potential to adversely affect the identity, strength, quality, purity, and potency as they may relate to the safety and effectiveness of a drug and require prior approval of a supplemental application. Under section 506A, FDA may require submission of a supplemental application for drugs made with manufacturing changes that are not major and may establish categories of manufacturing changes for which a supplemental application is required. In such a case, the applicant may begin distribution of a drug 30 days after FDA receives a supplemental application unless the agency notifies the applicant within the 30-day period that prior approval of the application is required. Under the statute, FDA may also designate a category of manufacturing changes that permit the applicant to begin distributing a drug made with such changes upon receipt by the agency of a supplemental application for the change. Finally, FDA may also authorize applicants to distribute drugs manufactured with a change without submitting a supplemental application. The law provides that FDA may establish categories of manufacturing changes that may be made without submitting a supplemental application.

A. Development of the Regulation

In the **Federal Register** of October 1, 1999 (64 FR 53281), FDA published a proposed rule to implement section 506A of the act for NADAs and ANADAs. In that same issue of the **Federal Register** (64 FR 53393), FDA announced the availability of a draft guidance for industry entitled ''Chemistry, Manufacturing and Control Changes to an Approved NADA or ANADA'' (GFI #83). The guidance assists applicants in determining how they should report changes to an approved NADA or ANADA under section 506A of the act and under the proposed revisions to the new animal drug regulations pertaining to supplements and other changes to an approved application. With the issuance of this final rule, we are announcing we will issue a revised final guidance to assist applicants in determining how they should report changes to an approved NADA or ANADA under both section 506A of the act and these final regulations. The guidance has been revised to conform to the final rule and, as appropriate, to comments received. It will be issued upon approval of information collection requirements that are subject to review by the Office of Management and Budget (OMB) under the Paperwork Reduction Act.

B. Risk-Based Approach

The publication of this final rule is an important step in the process of adopting a risk-based approach to the regulation of drugs. In the 1990s, FDA sponsored research at the University of Maryland and other universities on the types of chemistry and manufacturing changes to immediate release solid oral drug products that could affect drug performance (i.e., identity, strength, quality, purity, and potency) and, therefore, safety and effectiveness. Using that research, FDA's Center for Drug Evaluation and Research (CDER) began to develop a risk-based approach to the implementation of manufacturing changes. Following CDER's example, FDA's Center for Veterinary Medicine (CVM) also employed a similar risk-based approach to the implementation of manufacturing changes for animal drugs. This approach provided for a continued high level of scrutiny by FDA of changes that were most likely to affect the performance of a drug and decreased scrutiny of changes that were not likely to affect the performance of a drug.

The risk-based approach was first explained in a series of guidance documents (the Scale-up and Postapproval Changes (SUPAC) guidances) that reduced the regulatory burden of obtaining FDA authorization to make certain changes. The work continued in regulations issued by the Center for Biologics Evaluation and Research (CBER) in 1997 (21 CFR 601.12). In November 1997, this risk-based approach was codified in section 116 of the Modernization Act.

This final rule implements section 116 of the Modernization Act by incorporating the statutory standards for characterizing proposed changes as having substantial, moderate, or minimal potential to adversely affect the identity, strength, quality, purity, and potency of a drug as they may relate to its safety and effectiveness and determining submission requirements based on the potential risks associated with the changes. For changes with a substantial potential to affect the designated characteristics of a drug, FDA must review and approve a supplement that contains information showing that the proposed change will not adversely affect the drug's characteristics (i.e., information developed by the holder of the application to validate the effect of the proposed change) before distribution of the product made using the change.

It was anticipated when section 116 of the Modernization Act was written that the science of manufacturing would evolve over time and affect whether changes would be considered major or nonmajor. To accommodate future technological advancements, section 116 of the Modernization Act and this final implementing regulation both provide that FDA may, by regulation or guidance, change the designation of a particular category of change from major to nonmajor or vice versa. This concept of an evolving risk-based approach to manufacturing changes also is consistent with the agency's Good Manufacturing Practices Initiative launched in August 2002. The goals of this initiative include:

- Ensuring that state-of-the-art pharmaceutical science is utilized in the regulatory review and inspection policies;
- Encouraging the adoption of new technological advances in high quality and efficient manufacturing by the pharmaceutical industry;
- Assessing the applicable current good manufacturing practice (CGMP) requirements relative to the best quality management practices;
- Strengthening public health protection by implementing risk-based approaches that focus both industry and FDA attention on critical areas for improving product safety and quality; and
- Enhancing the consistency and coordination of FDA's drug quality oversight activities.

Specifically, one of the efforts of the CGMP initiative is to facilitate continuous improvement and innovation in manufacturing by allowing manufacturers to make certain types of changes in their processes without prior FDA approval. This rule, in keeping with that initiative, provides for a mechanism of continuous improvement through the guidance process (21 CFR 10.115) that may provide for less burdensome documentation of certain changes as manufacturing processes and pharmaceutical science develop.

II. Harmonization and Highlights of Revisions to the Proposed Rule

In the proposed rule to implement section 506A of the act for supplements and other changes to approved NADAs and ANADAs (64 FR 53281), CVM stated its intent to harmonize the reporting requirements for manufacturing changes for animal drugs with those requirements applicable to human drugs, 21 CFR 314.70. CDER published their final rule in the **Federal Register** of April 8, 2004 (69 FR 18727). CDER modified their proposed rule in response to comments received. CVM has not received similar comments to its aforementioned proposed rule. However, as a result of its harmonization effort with CDER's proposed 21 CFR 314.70, CVM has incorporated, as appropriate, many of the changes to CDER's proposed rule. This section describes the changes resulting from harmonization with CDER's final rule and other comments specific to 21 CFR 514.8. Other changes initiated by CVM are also described. Minor editorial changes are not described.

A. Section 514.8(a)—Definitions

1. Definition of ''Specification'' (Proposed § 514.8(a)(2)(iii))

FDA has revised the proposed definition of ''specification'' in § 514.8(a)(2)(iii) for consistency with CDER's regulations and has renumbered § 514.8(a)(2)(iii) through (a)(2)(v). The proposed definition included the phrase ''* * *other components including container closure systems, and in-process controls.'' This phrase has been revised to state ''components, in-process materials, container closure systems, and other materials used in the production of a drug.'' Thus, the revised definition is as follows: ''Specification means the quality standard (i.e., tests, analytical procedures, and acceptance

criteria) provided in an approved application to confirm the quality of drugs including, for example, drug substances, Type A medicated articles, drug products, intermediates, raw materials, reagents, components, in-process materials, container closure systems, and other materials used in the production of a drug. For the purpose of this definition, the term 'acceptance criteria' means numerical limits, ranges, or other criteria for the tests described.'' See the response to comment 4 regarding the use of the terms ''drug(s),'' ''drug substance(s),'' and ''drug product(s).''

2. Definition of ''validate the effects of the change'' (Proposed § 514.8(a)(2)(iv))

FDA has revised the proposed definition of ''validate the effects of change'' in § 514.8(a)(2)(iv) for consistency with CDER's regulations. The revised definition is as follows: ''Assess the effects of the change means to evaluate the effects of a manufacturing change on the identity, strength, quality, purity, and potency of a drug as these factors may relate to the safety or effectiveness of the drug.'' See the response to comment 3 regarding the use of the term ''assess'' instead of ''validate.''

3. Definitions of ''Listed drug'' and ''The list'' (Proposed § 514.8(a)(2)(i) and (v))

FDA has deleted the definitions of ''Listed drug'' (proposed § 514.8(a)(2)(i)) and ''The list'' (proposed § 514.8(a)(2)(v)). The definitions were originally proposed to clarify the meaning of ''reference listed drug'' identified under proposed § 514.8(b)(2)(ii)(B). Since the term ''reference listed drug'' has been deleted from proposed § 514.8(b)(2)(ii)(B), the definitions are currently not needed. See the discussion under Section B of the preamble regarding the changes to proposed section 514.8(b)(2)(ii)(B).

B. Section 514.8(b)—Manufacturing Changes to an Approved Application Manufacturing Changes Requiring Preapproval of a Supplement (Proposed § 514.8(b)(1)(ii))

FDA has revised § 514.8(b)(1)(ii) by replacing ''effect'' with ''effects'' and deleting the phrase ''* * *on the identity, strength, quality, purity, or potency of the new animal drug as these factors may relate to the safety or effectiveness of the new animal drug* * *'' because ''assess the effects of the change'' already is defined under § 514.8(a)(2)(i). Thus, proposed § 514.8(b)(1)(ii) is revised as follows: ''The holder of an approved application under section 512 of the act must assess the effects of the change before distributing a drug made with a manufacturing change.''

1. Provision of Supplemental Application to FDA District Office (Proposed § 514.8(b)(1)(iv))

FDA has revised proposed § 514.8(b)(1)(iv) to apply to both supplements and amendments as provided in CDER's regulations, § 314.70. In addition, this section also includes clarification with regard to providing a field copy for supplemental changes to drugs manufactured outside of the United States, see the response to comment 6. The section now provides that: ''In each supplement and amendment to a supplement providing for a change under paragraph (b)(2) or (b)(3) of this section, the applicant must include a statement certifying that a field copy has been provided to the appropriate FDA district office. No field copy is required for a supplement providing for a change made to a drug manufactured outside of the United States''

2. Changes That May Affect Drug Equivalence (Proposed § 514.8(b)(2)(ii)(B))

FDA has revised § 514.8(b)(2)(ii)(B) by: (1) Specifically identifying the drug as approved under section 512(b) of the act, (2) replacing ''animal'' in ''* * *appropriate animal studies'' with ''clinical'' to be more consistent with the language of section 506A of the act, and (3) deleting ''or to the reference listed drug.'' Though § 514.8 applies to supplements to abbreviated new animal drug applications, FDA intends to address the term ''reference listed drug'' in future regulations for drugs approved under section 512(c)(2)(A) (21 U.S.C. 360b(c)(2)(A) of the act.

3. Container Closure Changes That May Affect Drug Impurity Profile (Proposed § 514.8(b)(2)(ii)(E))

FDA has limited the requirement for a prior approval supplement for drug product container closure systems to include only changes in the type or composition of a packaging component. FDA has revised § 514.8(b)(2)(ii)(E) to be similar to CDER's regulations, § 314.70, and it now states: ''Changes in a drug product container closure system that controls the drug delivered to the animal or changes in the type or composition of a packaging component that may affect the impurity profile of the drug product.'' Unlike CDER's § 314.70(b)(vi), CVM has not included specific examples of the container closure changes and believes that these examples are best addressed through guidance.

4. Supplement Approval Prior to Product Distribution (Proposed § 514.8(b)(2)(iii))

FDA has added the sentence, ''The supplement must be labeled ''Prior Approval Supplement'' after the first sentence in § 514.8(b)(2)(iii) to be consistent with the submission identification requirements described in § 514.8(b)(3)(iii), (b)(3)(vi), and (b)(4).

5. Evaluate the Effects of the Change (Proposed § 514.8(b)(2)(iii)(E))

FDA has revised § 514.8(b)(2)(iii)(E) to state: ''A description of the methods used and studies performed to assess the effects of the change.'' See the response to comment 3.

6. Validation Protocols (Proposed § 514.8(b)(2)(iii)(I))

FDA has revised proposed § 514.8(b)(2)(iii)(I) to be consistent with CDERs regulations by replacing ''test methodologies'' with ''test methodologies related to sterilization process validation.''

FDA has deleted proposed § 514.8(b)(2)(iii)(K) because submissions related to environmental considerations are addressed elsewhere in the regulations (see part 25 (21 CFR part 25)).

FDA has included § 514.8(b)(2)(iii)(J) to be consistent with section 506A(c)(1) of the act. The new section states: ''Any other information as directed by FDA.''

7. Protocol Submission as a Supplement (Proposed § 514.8(b)(2)(v))

FDA has revised the proposed rule to clarify that a protocol must be submitted as a prior approval supplement if the protocol was not already included in an approved application or when changing an approved protocol. These changes are consistent with CDER's regulations, § 314.70.

8. Thirty-Day Changes-Being-Effected Supplement—Container Closure System (Proposed § 514.8(b)(3)(ii)(A))

To be consistent with CDER's regulations, FDA has revised proposed § 514.8(b)(3)(ii)(A) to clarify the wording in sections 514.8(b)(2) and 514.8(b)(4) of the proposed regulations. Revised § 514.8(b)(3)(ii)(A) states: ''A change in the container closure system that does not affect the quality of the drug except as otherwise described in paragraphs (b)(2) and (b)(4) of this section.''

9. Thirty-Day Changes-Being-Effected Supplement (Proposed § 514.8(b)(3)(iii))

FDA has revised proposed § 514.8(b)(3)(iii) to incorporate

additional reference to § 514.8(b)(3)(vi) since ''Supplements-Changes Being Effected'' described under § 514.8(b)(3)(vi) must also give a full explanation of the basis of the change and identify the date on which the change is made.

10. Thirty-Day Changes-Being-Effected Supplement (Proposed § 514.8(b)(3)(v)(B))

FDA has revised proposed § 514.8(b)(3)(v)(B) to be consistent with CDER's regulations, § 314.70 and to clarify compliance with this section by allowing applicants the opportunity to amend a supplement by providing any missing information.

11. Minor Changes—Expiration Dating Period (Proposed § 514.8(b)(4)(ii)(F))

The term ''full production batches'' is redundant and may incorrectly imply that only the largest production batches can be used to extend an expiration dating period. Therefore, FDA has revised § 514.8(b)(4)(ii)(F) by deleting the second ''full'' before ''production batches.''

12. Minor Changes—Alternate Analytical Procedure (Proposed § 514.8(b)(4)(ii)(G))

FDA has revised § 514.8(b)(4)(ii)(G) by adding ''* * *or deletion of an alternative analytical procedure'' to be consistent with CDER's regulations, § 314.70.

13. Annual Report (Proposed § 514.8(b)(4)(iii))

FDA has revised § 514.8(b)(4)(iii) by deleting from the first sentence ''a list of all products involved;'' and adding ''(A) A completed Form FDA 356V;'' to be consistent with § 514.8(b)(2)(iii)(A). FDA is also adding § 514.8(b)(4)(iii)(J), ''Any other information as directed by FDA'' to be consistent with section 506A(d)(2)(A) of the act and making additional revisions to § 514.8(b)(4)(iii)(B) through (b)(4)(iii)(I) to be consistent with CDER's regulations, § 314.70. Most of the changes in this section are either editorial or were made to maintain consistency with other sections under § 514.8 or with CDER's regulations, § 314.70. Revisions to § 514.8(b)(4)(iii)(G) are made in response to comment 25.

C. Labeling and Other Changes to an Approved Application

1. Preapproval Supplement—Required Information (Proposed § 514.8(c)(2))

FDA has revised proposed § 514.8(c)(2)(ii)(E) by adding ''* * *in support of the change'' in order to clarify the scope of the derived data used to support a change. FDA has deleted proposed § 514.8(b)(2)(iii)(D) and proposed § 514.8(b)(2)(iii)(K), because submissions related to environmental considerations are addressed elsewhere in the regulations (see part 25). Additional changes are made to § 514.8(c)(2)(i) by deleting the term ''prescription new animal drug mailing/promotional pieces,'' and to § 514.8(c)(2)(i)(A) and § 514.8(c)(3)(A) by replacing the term ''side effect'' with the term ''adverse reaction.''

2. Labeling Changes to be Placed Into Effect Prior to Receipt of a Written Notice of Approval of a Supplemental Application (Proposed § 514.8(c)(3)(iv))

FDA has revised proposed § 514.8(c)(3)(iv) to read ''If the supplemental application is not approved, FDA may initiate an enforcement action because the drug is misbranded under section 502 of the act and/or adulterated under section 501 the act. In addition, under section 512(e) of the act, FDA may issue a notice of opportunity for hearing to withdraw the approval of the application.'' Section 514.8(c)(3)(iv) is being revised to clarify potential legal options.

III. Responses to Comments on the Proposed Rule

CVM received comments on many aspects of the proposed rule from five parties, including pharmaceutical industry associations and other interested persons. One comment to the proposed rule also fully endorsed comments by a pharmaceutical trade organization to the analogous proposed rule for human new and abbreviated new drug applications by CDER, which was published in the **Federal Register** of June 28, 1999 (64 FR 34608). These endorsed comments also are addressed in this final rule. All comments and the agency's responses are summarized below.

A. Section 514.8(a)—Definitions

1. Definition of ''Minor Changes and Stability Report'' (Proposed § 514.8(a)(2)(ii))

Proposed § 514.8(a)(2)(ii) states that the ''Minor changes and stability report'' is a report that is submitted to the new animal drug application or abbreviated new animal drug application once each year within 60 days of the anniversary date of the application's original approval or mutually agreed upon date.

(1) One comment requested clarification of the requirement of submitting the minor changes and stability report noting that the time frame in the proposed provision extends before and after this agreed upon date. The commenter suggested that the requirement be revised to require submission of the report ''within 60 days of the anniversary date of the application's original approval or mutually agreed upon date.''

Agency Response: FDA agrees to revise the definition as requested with some modification. The definition is revised to state, in part, ''* * *within 60 days before or after the anniversary of the application's original approval or mutually agreed upon date.''

2. Definition of ''Specification'' (Proposed § 514.8(a)(2)(iii))

''Specification'' is defined in proposed § 514.8(a)(2)(iii) as the quality standard (i.e., tests, analytical procedures, and acceptance criteria) provided in an approved NADA or ANADA to confirm the quality of drug substances, drug products, intermediates, raw materials, reagents, and other components including container closure systems and in-process controls. The proposed regulation states that the term ''acceptance criteria'' refers to numerical limits, ranges, or other criteria for the tests described.

(2) One comment stated that ''* * *intermediates, raw materials, reagents, and other components including container closure systems and in-process materials'' should be deleted from the definition of specification, with changes for these materials handled separately from the final rule and final guidance. The comment stated that the definition is not consistent with the International Conference on Harmonization (ICH) guidance on specifications entitled ''Test Procedures and Acceptance Criteria for New Drug Substances and New Drug Products: Chemical Substances'' (ICH Q6A), which includes only drug substance and drug product. Additionally, the comment indicated that inclusion of items beyond the drug substance and drug product represents a level of complexity that would be better dealt with in guidances that can adequately evaluate the significance of changes to specific items.

Agency Response: FDA declines to revise the definition as requested. Section 512(b)(1)(D) (for NADAs) and section 512(n)(1)(G) (for ANADAs) of the act (21 U.S.C. 360b(b)(1)(D) and 360b(n)(1)(G)) require that a full description of the methods used in, and the facilities and controls used for, the manufacture, processing, and packing of a drug be provided in an application. The regulation for the establishment of

a performance standard at 21 CFR 514.1(b)(5)(v) also requires information to ensure proper identity, strength, quality, and purity of the raw materials, whether active or not, including the specifications for acceptance and methods of testing for each lot of raw material.

Intermediates, raw materials, reagents, container closure systems, in-process materials and other materials that are used in the manufacture of drug substances, Type A medicated articles, or drug products are considered part of the manufacturing method and can have a direct effect on the identity, strength, quality, purity, or potency of the drug. While the extent of a specification (e.g., number or type of tests, strictness of acceptance criteria) for these materials may vary depending on the materials' use in a given manufacturing process, FDA has required specifications for these materials to be included in applications as part of the description of the manufacturing method and will continue to do so. Similar to the ICH Q6A guidance, the scope of the Veterinary International Conference on Harmonization (VICH) guidance entitled ''Test Procedures and Acceptance Criteria for New Veterinary Drug Substances and New Medicinal Products: Chemical Substances'' (GL39) is limited to only drug substances and drug products, whereas in this regulation the definition of ''Specification'' (see § 514.8(a)(2)(iii)), is intended to cover all drug materials including drug substances, drug products, raw materials, reagents, etc.

3. Definition of ''Validate the Effects of the Change'' (Proposed § 514.8(a)(2)(iv))

Proposed § 514.8(a)(2)(iv) defines ''validate the effects of the change'' to mean to assess the effect of a manufacturing change on the identity, strength, quality, purity, or potency of a new animal drug as these factors relate to the safety or effectiveness of the new animal drug.

(3) Several comments recommended that FDA replace the terms ''validate'' or ''validation'' with ''assess'' or ''assessment.'' One comment stated that although FDA is using the terms consistently with Congress' use of the terms in section 506A of the act, the term ''validate'' is likely to cause confusion because this term has long been associated with, and has specific meaning under, FDA's current good manufacturing practices (CGMPs) regulations.

Agency Response: FDA agrees to revise the definition as requested, as the revision makes the definition more clear without changing its meaning. FDA, on its own initiative, is also revising the phrase ''* * *purity, or potency'' to ''* * *purity, and potency* * *'' to be consistent with section 506A(b) of the act. In addition, FDA is replacing the term ''assess'' with ''evaluate'' and the ''effect'' with ''effects.'' FDA notes that while the effect of a manufacturing change on the identity, strength, quality, purity and potency of a drug is to be assessed, this assessment could involve testing of materials directly affected by a change (e.g., drug substance) in addition to or instead of drug testing. FDA has also revised § 514.8(b)(2)(iii)(E) accordingly to state: ''A description of the methods used and studies performed to assess the effects of the change.''

Other Changes to ''Definitions'' Section (Proposed § 514.8(a))

(4) Several comments requested clarification and standardization of the terms ''drug product,'' ''drug,'' and ''product.'' They further suggested that ''drug substance'' be changed to ''active pharmaceutical ingredient'' (API) to be consistent with other guidances. Also, clarification of whether ''product'' refers to API was requested.

Agency Response: FDA agrees that terminology should be standardized throughout the proposed 21 CFR 514.8 regulations. Therefore, FDA has replaced the terms ''product'' and ''new animal drug'' with ''drug'' where applicable throughout 21 CFR 514.8. This change differs from the human drug regulations where the terms ''product'' and ''drug'' are replaced by the terms ''drug substance'' or ''drug product'' throughout 21 CFR 314.70. The reason for the difference is that animal drugs such as free-choice feeds (21 CFR 510.455), Type A medicated articles (21 CFR 558.3(b)(2)) and Type B or Type C medicated feed manufactured from a drug component (21 CFR 558.3(b)(5)) are not considered ''drug products'' as defined under 21 CFR 210.3(b)(4). However these products require approved new animal drug applications and therefore are also covered by 21 CFR 514.8. Using the term ''drug product'' instead of ''drug'' in 21 CFR 514.8 may incorrectly imply that reporting of manufacturing changes for the previously mentioned approved products is not required. The term ''drug'' as defined under section 201(g)(1) of the act (21 U.S.C. 321(g)(1)) encompasses drug substances, drug products, Type A medicated articles, etc. The terms ''drug substance'' and ''drug products'' are included in certain parts of 21 CFR 514.8, specifically in the description of changes that do not apply to free-choice medicated feeds, Type A medicated articles or Type B and Type C medicated feed manufactured from a drug component, see 21 CFR 514.8(b)(2)(ii), (b)(3)(ii), (b)(3)(vi) and (b)(4)(ii).

FDA declines to change ''drug substance'' to ''active pharmaceutical ingredient,'' as requested. ''Drug substance'' is the commonly accepted term for filing purposes whereas the term ''active pharmaceutical ingredient'' is more commonly used for compliance purposes. Both terms are often used interchangeably. Since § 514.8 deals with filing issues, FDA prefers to use the term ''drug substance.'' FDA has included a definition of ''drug substance'' under § 514.8(a)(2)(ii) to read ''Drug substance means an active ingredient as defined under § 210.3(b)(7).''

B. Section 514.8(b)—Manufacturing Changes to an Approved Application

1. Manufacturing Changes Requiring Prior Approval of a Supplement (Proposed § 514.8(b)(1)(ii))

Proposed § 514.8(b)(1)(ii) requires the holder of an approved application to validate the effect of the manufacturing change on the identity, strength, quality, purity, or potency of the new animal drug as these factors may relate to the safety or effectiveness of the new animal drug before distributing a drug made with a manufacturing change.

(5) One comment recommended that FDA replace the term ''validate'' with ''assess'' in proposed § 514.8(b)(1)(ii).

Agency Response: FDA agrees to revise the definition as requested.

2. Provision of Supplemental Application to FDA District Office (Proposed § 514.8(b)(1)(iv))

Proposed § 514.8(b)(1)(iv) states that an applicant must include in each supplemental application providing for a change under paragraph (b)(2) or (b)(3) of this section, a statement certifying that a copy of the supplement has been provided to the appropriate FDA district office.

(6) One comment requested deletion of this requirement since many district offices have neither the space to store these documents nor the need for all submission documents. Any submission documents desired or required by the district office are available either from the Document Control Unit, by request from the manufacturing site, or at the manufacturing site during an inspection. Requiring copies to be sent to the district offices is a non-productive use of both industry and agency resources and effectively circumvents the goal of this rule and the intent of the Modernization Act.

Another comment requested clarification as to whether the field copy should be sent to the applicant's home district office, to the FDA office where the change is being made, or to the FDA office in the district of the company's corporate headquarters. FDA also was asked to clarify to what FDA office the copy should be sent for changes outside of the United States.

Agency Response: FDA declines to revise the regulations as suggested.

FDA disagrees that sending copies to the district offices is a non-productive use of both industry and agency resources. Instead, this requirement may reduce the burden on FDA resources (for example, searching and copying documents in the Document Control Unit by the CVM review staff), increase the awareness and interaction of district offices with FDA headquarters regarding manufacturing changes placed into effect for animal drugs, and improve the timeliness of CGMP inspections for certain types of changes for animal drugs, if needed.

FDA also believes that this requirement is in accord with the intent of the Modernization Act, specifically section 506A of the act. That section describes requirements and procedures for making and reporting manufacturing changes. One of the requirements specified in section 506A of the act is that the holder must ''validate'' or assess the effects of a change before distributing a drug made with the change. In order for FDA to determine whether an applicant has made a change according to section 506A of the act, the FDA's district offices also must be informed of the effected change or change to be effected concurrently with the change being reported to FDA headquarters in a supplemental application.

Field copies should be sent to the FDA district office where the changes are being made. No field copy is required for changes made outside of the United States. Proposed § 514.8(b)(1)(iv) is amended by adding the statement ''No field copy is required for a supplement providing for a change made to a drug manufactured outside of the United States''

3. Changes Listed in the Cover Letter (Proposed § 514.8(b)(1)(v))

Proposed § 514.8(b)(1)(v) adds a requirement that a list of all changes contained in a supplement or annual report described in § 514.8(b)(4) must be included in the cover letter for the supplement or annual report.

(7) Several comments requested that ''cover letter'' be replaced by ''introduction to the document'' since cover letters are not considered confidential.

Agency Response: FDA declines to revise the regulation as suggested. The standards for disclosing specific information from a cover letter or application do not differ depending on where this information is provided or what the document is titled. Information that is exempt from disclosure (e.g., trade secret or confidential commercial information) is not disclosed whether it is in a cover letter or an application (see also 21 CFR 514.11). FDA has revised proposed § 514.8(b)(1)(v) to harmonize with the reporting requirements in CDER's regulations § 314.70(a)(6) to only require supplements to provide a list of all the changes in the cover letter. For annual reports, the list of changes may be provided in the cover letter or in the submission's summary section.

C. Changes Requiring Submission and Approval of a Supplement Prior to Distribution of the Drug Made Using the Change (Major Changes)

1. Changes That May Affect Product Sterility Assurance (Proposed § 514.8(b)(2)(ii)(C))

Proposed § 514.8(b)(2)(ii)(C) requires prior approval for changes that may affect product sterility assurance, such as changes in product or component sterilization method(s) or an addition, deletion, or substitution of steps in an aseptic processing operation.

(8) Several comments suggested that the language be modified to state ''changes that reduce the sterility assurance level'' since the impact on the sterility assurance level should be the guiding factor and the language, as proposed, is too burdensome in terms of regulatory reporting.

Agency Response: FDA declines to revise the provision as requested. The assessment as to whether a change reduces the sterility assurance is a complex and multidimensional analysis. For example, a change to a more stringent terminal sterilization process, while in theory providing a lower probability of non-sterile units, may damage the container closure system so that sterility of individual units could not be maintained. FDA also disagrees that the proposed language is too burdensome with regard to regulatory reporting. Under the previous regulations in § 514.8(a)(2), most manufacturing and control changes, including manufacturing and control changes for sterile drug substance or drug products, required prior approval supplements. The proposed regulations allow the opportunity for applicants to report more manufacturing changes in changes-being-effected supplements or annual reports, including those manufacturing changes that will not negatively impact sterility assurance levels.

2. Changes Affecting Natural Products (Proposed § 514.8(b)(2)(ii)(F))

Proposed § 514.8(b)(2)(ii)(F) requires prior approval for changes solely affecting a natural product, a recombinant DNA-derived protein/polypeptide product, or a complex or conjugate of a new animal drug with a monoclonal antibody for the following: (1) Changes in the virus or adventitious agent removal or inactivation method(s), (2) changes in the source material or cell line, and (3) establishment of a new master cell bank or seed.

(9) Several comments requested that FDA delete the reference to ''natural products'' since the definition of natural products is not clear and having special requirements for this additional category of products represents additional regulatory reporting requirements beyond current practice.

Agency Response: FDA declines to delete the phrase ''natural products'' from this provision. The changes identified in this provision are major changes and apply equally to a natural product, a recombinant DNA-derived protein/polypeptide, or a complex or conjugate of a drug substance with a monoclonal antibody. FDA will provide a definition of natural product in the final guidance that will be published shortly, but declines to provide the definition in the regulation because advancements in technology may require that the definition be revised.

FDA also disagrees that having special requirements for this additional category of products imposes additional regulatory reporting requirements beyond current practice. Under the previous regulations at § 514.8(a)(2), most manufacturing and control changes, including those for a natural product, DNA-derived protein/polypeptide, or a complex or conjugate of a new animal drug with a monoclonal antibody, required prior approval supplements. In the final guidance, FDA will identify changes related to these products that may now be filed in changes-being-effected supplements or annual reports. However, the three changes specified in this provision, which are unique to the identified types of drug products, are considered to have a substantial potential to adversely affect the identity, strength, quality, purity, or potency of a drug as these factors may relate to the safety or effectiveness of a drug. Virus or adventitious agent removal or

inactivation processes are the means by which FDA ensures that these types of agents are removed. Failure to remove such agents has a significant potential to adversely affect public safety. Changes in source material or cell line, or establishment of a new master cell bank or seed, have a substantial potential to affect the quality of a drug substance. For example, a change in source material (e.g., species, geographic region of harvesting) could result in different impurities or contaminants (e.g., pesticides) than were previously seen or cause a change in potency.

3. Supplement Approval Prior to Product Distribution (Proposed § 514.8(b)(2)(iii))

Proposed § 514.8(b)(2)(iii) specifies the information to be included in the supplement.

(10) Several comments requested adding ''as appropriate'' as follows: ''Except for submissions under paragraph (e) of this section, the following shall be contained in the supplement, as appropriate.'' The comments said that not all listed material is relevant for every submission.

Agency Response: FDA declines to revise the provision as requested. FDA expects that the information specified in § 514.8(b)(2)(iii)(A) through (I) will be needed for many supplemental applications. FDA believes that the addition of ''as appropriate'' may incorrectly give the impression that this information is not routinely needed and would result in supplemental applications being submitted with insufficient information.

4. Validation Protocols for Natural Products (Proposed § 514.8(b)(2)(iii)(H))

Proposed § 514.8(b)(2)(iii)(H) states that for a natural product, a recombinant DNA-derived protein/polypeptide product, or a complex or conjugate of a drug with a monoclonal antibody, relevant validation protocols must be provided in addition to the requirements in § 514.8(b)(2)(iii)(E) and (b)(2)(iii)(F).

(11) One comment requested that FDA delete the requirement for the submission of validation protocols for ''natural products, et. al.'' because: (1) Validation protocols are maintained at the manufacturing site and are more appropriately reviewed on site, and (2) requiring submission of validation protocols only for natural products is a new and additional requirement that provides no greater assurance of safety or effectiveness of these products. The comment further stated that the additional regulatory burden is in opposition to the goals of the proposed rule and to the intent of the Modernization Act, and that there is no scientific rationale for singling out natural products under this requirement. In addition, there is no clear definition of these products, although the accompanying guidance states that natural products include products derived from microorganisms. Many products, including antibiotics, are derived from microorganisms and have been produced and used for many years, some for decades, with adequate controls on manufacturing changes and no adverse effects. Requiring submission of validation protocols for only this single class of products is excessive.

Agency Response: FDA declines to revise the provision as requested. Unless otherwise specified by FDA, validation protocols and data need not be filed in the application but should be retained at the facility and be available for review by FDA at the agency's discretion. For most products, FDA does not require the submission of validation protocols and data. However, for a natural product, a recombinant DNA-derived protein/polypeptide, or a complex or conjugate of a drug substance with a monoclonal antibody, FDA does require the submission of validation protocols for certain critical manufacturing processes unique to these drug substances or drug products. For example, FDA would expect the validation protocol for the virus or adventitious agent removal or inactivation process to be submitted in an application. FDA currently requires this type of information to be submitted in an application. Under § 514.8(b)(1)(iii), FDA may publish future guidances to address specific filing requirements for these types of drug substances or drug products, including drug substances derived from microorganisms.

FDA also disagrees that this requirement is an additional regulatory burden and contravenes the intent of the Modernization Act. Under the previous regulations at § 514.8(a)(2), most manufacturing and control changes, including those for a natural product, required prior approval supplements. In the final guidance, FDA will identify many changes related to these products that may be filed in changes-being-effected supplements or annual reports. As discussed previously, FDA will provide a definition of a natural product in the final guidance.

5. Validation Protocols and SOP's (Proposed § 514.8(b)(2)(iii)(I) and (J))

Proposed § 514.8(b)(2)(iii)(I) states that for sterilization process and test methodologies, relevant validation protocols must be provided in addition to the requirements in paragraphs (b)(2)(iii)(E) and (b)(2)(iii)(F) of this section. Proposed § 514.8(b)(2)(iii)(J) states that a reference list of relevant standard operating procedures (SOPs), when applicable, must be contained in the supplement.

(12) Several comments recommended that reference to SOPs be deleted because: (1) The data represent compliance information and are better suited for field inspections, and (2) the addition of this information to existing practice would result in increased regulatory burden.

Agency Response: FDA has revised the regulation in response to the comment. An applicant is required to submit a ''full description of the methods used in, and the facilities and controls used for, the manufacture, processing, and packing of such drug'' (sections 512(b)(1)(D) and 512(n)(1)(G) (21 U.S.C. 360b(b)(1)(D) and 360b(n)(1)(G)) of the act). This information may be submitted in different forms, including SOPs. In most cases, SOPs do not include information relevant to the NADA or ANADA review, but rather information relevant to determining an applicant's compliance with CGMPs. However, in the case of a natural product, a recombinant DNA-derived protein/polypeptide, or a complex or conjugate of a new animal drug with a monoclonal antibody, or a sterilization process, information contained in SOPs is often relevant to the review of certain aspects of an application.

FDA is deleting proposed § 514.8(b)(2)(iii)(J) and is revising proposed §§ 514.8(b)(2)(iii)(H) and (I) to limit the need for information on SOPs to these situations. As discussed previously, information regarding SOPs is needed in some cases. FDA wishes to emphasize that while the information is needed for the application review, it is not always necessary to submit the actual SOP as long as the required information is provided in sufficient detail as part of the application.

6. Expedited Review of Supplement (Proposed § 514.8(b)(2)(iv))

Proposed § 514.8(b)(2)(iv) states that an applicant may request an expedited review of a supplement for public health reasons or if a delay in making the change described in the supplement

would impose an extraordinary hardship.

(13) Several comments requested that FDA provide feedback to the applicant on the acceptance or refusal of an ''Expedited Review Request within 30 days.''

Agency Response: FDA declines to revise the provision as requested. FDA intends to issue future guidance on requesting expedited reviews of supplemental manufacturing changes.

7. Protocol Submission as a Supplement (Proposed § 514.8(b)(2)(v))

Proposed § 514.8(b)(2)(v) states that an applicant may submit one or more protocols describing the specific tests and validation studies and acceptable limits to be achieved to demonstrate the lack of adverse effect for specified types of manufacturing changes on the identity, strength, quality, purity, or potency of the product as these factors may relate to the safety or effectiveness of the product. Any such protocols, or change to a protocol, must be submitted as a supplement requiring FDA approval prior to distribution of the product. The supplement, if approved, may result in the proposed change subsequently falling within a reduced reporting category for the specific product because the use of the protocol for that type of change reduces the potential risk of an adverse effect.

(14) One comment recommended deleting or modifying the requirement that protocols ''must be submitted as a supplement requiring approval for FDA prior to distribution of the product'' because this requirement will have an effect opposite of the intent of the Modernization Act. Submission as a supplement subjects protocols to a 180-day review timeframe. Currently, such protocols are reviewed in a 30–45 day timeframe. Extending the review timeframe will delay implementation of changes contrary to the stated purpose of this rule. The comment suggested that the aforementioned requirement either should be deleted or subject to a limited 30-day review timeframe.

Agency Response: FDA declines to revise the regulation as requested. The protocols or ''comparability protocols'' described in proposed § 514.8(b)(2)(v) are new types of protocols for drugs and differ from the types of protocols (e.g., stability protocols) typically submitted to an investigational new animal drug file. It is expected that applicants will use comparability protocols to justify a reduced reporting category for the particular change, for example, by requesting that they be allowed to implement a major change without prior approval by FDA. These protocols, in effect, will reduce the regulatory oversight of the specified changes, and FDA considers this to have the potential to have an adverse effect on the identity, strength, quality, purity, or potency of a drug as these factors may relate to the safety or effectiveness of the drug. Also, where previously allowed by regulations, these changes were specified as requiring prior approval, and this rule just extends that option of submitting protocols for animal drugs.

FDA has revised § 514.8(b)(2)(v) by adding the title ''Comparability Protocol'' to differentiate this type of protocol from other types of protocols; and has included other language to be consistent with CDER's regulations.

D. Changes Requiring Submission of a Supplement at Least 30 Days Prior to Distribution of the Drug Made Using the Change (Moderate Changes)

8. Thirty-Day Changes-Being-Effected Supplement (Proposed § 514.8(b)(3)(ii)(B))

Proposed § 514.8(b)(3)(ii)(B) provides for a 30-day changes-being-effected supplement for changes solely affecting a natural product, a recombinant DNA-derived protein/polypeptide product or a complex or conjugate of a new animal drug with a monoclonal antibody, including: (1) An increase or decrease in production scale during finishing steps that involves new or different equipment; and (2) replacement of equipment with that of a similar, but not identical, design and operating principle that does not affect the process methodology or process operating parameters.

(15) Several comments stated that having special requirements for this category of products represents additional regulatory reporting requirements and regulatory burden beyond current practice and the intent of the Modernization Act. One comment requested that this section be removed and these changes be reported in annual reports. One comment stated that there is no scientific basis for singling out all natural products under this requirement as, for instance, microorganisms (from which some natural products are derived) form the basis of many products such as antibiotics, which have been produced and used for many years with adequate controls on manufacturing changes and no adverse effects. Rather, this comment advocated that these types of changes be evaluated on the potential for adverse impact on safety or effectiveness of the drug product.

Agency Response: FDA declines to revise the regulation as requested. However, FDA has revised § 514.8(b)(3)(ii)(B) to specify ''natural protein'' rather than ''natural product'' to be consistent with CDER's regulations. There are specific issues and concerns relating to the production of natural protein products that are not routinely associated with other classes of drugs and, therefore, FDA has specified certain requirements for proteins. Proteins are susceptible to denaturation. Denaturation can be caused by changes in sheer force as a result of scale and/or equipment changes. Also, proteins differentially adsorb to surfaces. The identity, strength, quality, purity, or potency of the product could be affected by changes in scale or equipment because of these characteristics.

(16) Several comments requested that FDA clarify whether this section applies to drug products or drug substances.

Agency Response: FDA agrees to clarify the proposed language as appropriate. This section applies to all animal drugs, including Type A medicated articles. The terms ''drug substance'' and ''drug product'' are specifically identified if the changes do not apply to free-choice medicated feeds, Type A medicated articles or Type B and Type C medicated feed manufactured from a drug component (see response to comment 4).

(17) Several comments requested clarification of ''finishing steps.''

Agency Response: FDA declines to revise the regulations to provide clarification of the term ''finishing steps.'' In general, finishing steps are considered those steps in the manufacturing process where the stability or the property and performance of a protein product is less likely to be affected by changes in scale or equipment. The steps in a manufacturing process that would be considered finishing steps depend on the manufacturing process and the specific protein being manufactured. A particular manufacturing step may be considered a finishing step for one product but not for another. An applicant is encouraged to discuss with FDA which steps would be considered finishing steps for its particular product and process. This discussion should occur as early in the process as possible, including during INAD meetings.

(18) Several comments requested clarification of the difference between equipment that is ''similar, but not identical,'' proposed as a changes-being-effected-in-30-days supplement, and the SUPAC terminology of equipment of the ''same design and operating principle,'' which already is defined in the SUPAC guidance and the proposed rule as an

annual report change. The comments further suggested that for equipment changes that are of different operating principle and design, FDA should consider classification within the major change category, and for equipment changes that are of the same operating principle but different design, FDA should consider classification within the moderate change category.

Agency Response: FDA agrees that replacement of equipment with that of a different design that does not affect the process operating parameters may be reported as a changes-being-effected-in-30-days supplement. Therefore, FDA is clarifying the requirement by replacing the phrase ''similar, but not identical, design and operating principle'' with the phrase ''different design.'' Equipment of a different design may or may not have a different operating principle.

FDA is also revising section 514.8(b)(3)(ii)(B)(*2*) by deleting ''new or'' since new equipment may not necessarily be different equipment in regard to process methodology or process operating parameters.

9. Supplement—Changes Being Effected (Proposed § 514.8(b)(3)(vi))

Proposed § 514.8(b)(3)(vi) states that the agency may designate a category of changes for the purpose of providing that, in the case of a change in such category, the holder of an approved application may begin distribution of the drug involved upon receipt by the agency of a supplement for the change. The information listed under paragraph (b)(2)(iii) of this section must be contained in the supplement. The supplement must be labeled ''Supplement—Changes Being Effected.'' These changes include, but are not limited to: (1) Addition to a specification or changes in the methods or controls to provide increased assurance that the new animal drug will have the characteristics of identity, strength, quality, purity, or potency that it purports or is represented to possess and (2) a change in the size and/or shape of a container for a nonsterile drug product, except for solid dosage forms, without a change in the labeled amount of product from one container closure system to another.

(19) Several comments recommended that FDA add ''a sterile drug product or a sterile drug substance'' to expand the type of drug products for which the container changes allowed in this section would apply, since size and shape changes for sterile API and drug products have only moderate potential impact. This is especially true when the size/shape changes are very minor in nature, as is often the case when suppliers make minute adjustments in their packaging components.

Agency Response: FDA declines to revise the regulation as requested. Sterility of drug products is a fundamental and essential quality attribute of these drugs and is a critical aspect of the safety assessment. Changes in the container closure system, even if minimal, may affect the sterility assurance of the drug product and are considered major changes. FDA acknowledges that the effects of changes in the size and/or shape of the container closure system for sterile drug substances are considered by FDA to be a lower risk than for sterile drug products because of the differences in procedures for sterilizing drug substances and finished drug products. However, they are still of a higher risk than for nonsterile products. Therefore, FDA declines to specify in the regulations that these changes can be submitted in a changes-being-effected supplement. Additional information on changing container closure systems for drug products is included in the final guidance.

10. Disapproved Supplements and Drug Distribution Stoppage (Proposed § 514.8(b)(3)(vii))

Proposed § 514.8(b)(3)(vii) provides that if the agency disapproves the supplemental application submitted under paragraph (b)(3) of this section, the agency may order the manufacturer to cease distribution of the drug products made with the manufacturing change.

(20) Several comments recommend replacing the language in § 514.8(b)(3)(vii) with ''If FDA later determines that the supplemental application is not immediately approvable, the agency will work with the applicant to resolve all issues and to assure the continued availability of the drug,'' since this is the current practice and the intent of the U.S. Senate as recorded in Senate Report 105–43.

Agency Response: FDA declines to revise the provision as requested. The regulation is consistent with section 506A(d)(3)(B)(iii) of the act, which allows FDA to disapprove a supplemental application and order the manufacturer to cease distribution of the drug made with the change.

E. Changes and Updated Stability Data to be Described and Submitted in an Annual Report (Minor Changes)

1. Minor Changes Documented in an Annual Report (Proposed § 514.8(b)(4)(ii)(A))

Under proposed § 514.8(b)(4)(ii)(A), the following type of change must be documented in the next annual report: Any change made to comply with an official compendium that is consistent with FDA requirements and provides increased assurance that the new animal drug will have the characteristics of identity, strength, quality, purity, or potency that it purports or is represented to possess.

(21) Several comments requested that FDA change this requirement to read ''Any change to comply with an official compendium.'' One of these comments added that: (1) Section 501(b) of the act requires the FDA to resolve any differences with the compendial body, the United States Pharmacopoeia (USP), (2) it is unfair to place the applicant in the middle of these discussions, and the compendial review process should be the mechanism by which the FDA has influence, and (3) it should be permitted and appropriate that any USP-adopted changes, including changes that may relax acceptance criteria and/or analytical procedures, be updated via an annual report, with both the innovator as well as any generic companies subject to this requirement. Another one of these comments added that FDA's proposed regulations are inconsistent with the statutory structure for drug approval and quality, and that requiring supplements for labeling changes consistent with compendial revisions would likely cause confusion and uncertainty about a product's legal status and further impose unnecessary, burdensome requirements on industry.

Agency Response: FDA declines to revise the provision as requested, but is revising the regulations to provide further clarification. The basis for this decision is set forth as follows.

Under section 501(b) of the act (21 U.S.C. 351(b)), a drug that is recognized in an official compendium may be considered adulterated if its strength differs from, or its quality or purity falls below, the standards set in the compendium. Determinations of adulteration under this provision of the act must be made in accordance with the analytical procedures prescribed in the compendium, except when there is no analytical procedure prescribed in the compendium or if the tests prescribed in the compendium are insufficient and the agency has gone through the process outlined in the

statute and has issued a regulation to provide an appropriate analytical procedure. No drug defined in an official compendium will be considered adulterated under section 501(b) of the act because its strength differs from, or its quality or purity falls below, the standards set in the compendium if the differences from the standard are stated in its label. Under section 502(g) of the act (21 U.S.C. 352(g)), a drug that is recognized in an official compendium may be considered misbranded if the drug is not packaged and labeled as prescribed in the compendium.

FDA is aware of the legal status of the United States Pharmacopoeia/National Formulary (USP/NF) under the act as a standard for determining whether a drug may be considered adulterated or misbranded. A compendial product that fails to comply with USP/NF standards may be considered to be adulterated or misbranded under the act. However, a compendial product can still be considered adulterated or misbranded under other provisions of sections 501 or 502 of the act, even if it complies with USP/NF standards.

Thus, while the standards in the USP/NF are legally enforceable standards for determining whether a drug is considered adulterated under section 501 of the act, these standards are not considered the complete regulatory specifications. FDA is responsible for establishing regulatory specifications as part of the approval of an application. Under section 512(b)(1)(D) and 512(n)(1)(G) (21 U.S.C. 360b(b)(1)(D) and 360b(n)(1)(G)) of the act, an application must include a full description of the methods used in, and the facilities and controls used for, the manufacture, processing and packing of the drug. If the specifications included in the application are considered inadequate to ensure and preserve the identity, strength, quality, purity or potency of the drug, FDA will refuse to approve the application. Standards established by an official compendium may be inadequate for the purposes of approving an application under sections 512(d)(1) and 512(c)(2)(A) (21 U.S.C. 360b(d)(1) and 360b(c)(2)(A)) of the act. The USP acknowledges that ''[w]hile one of the primary objectives of the Pharmacopoeia is to assure the user of official articles of their identity, strength, quality, and purity, it is manifestly impossible to include in each monograph a test for every impurity, contaminant, or adulterant that might be present, including microbial contamination. These may arise from a change in the sources of the material or from a change in the processing, or may be introduced from extraneous sources. Tests suitable for detecting such occurrences, the presence of which is inconsistent with applicable good manufacturing practice or good pharmaceutical practice, should be employed in addition to the tests provided in the individual monograph.'' (U.S.P. 29, General Notices, Foreign Substances and Impurities).

Not all compendial standards or changes in existing compendial standards are adequate to ensure and preserve the identity, strength, quality, purity, or potency of the drug, or are consistent with other requirements of the act. For example, a deletion of an impurity test may result in an inadequate standard for ensuring the purity of the drug. Therefore, FDA does not believe that all changes made to comply with an official compendium are of a type that should be reported in an annual report.

Analytical procedures: For compendial drugs, the determination of whether the drug is adulterated under section 501(b) of the act must be made in accordance with the analytical procedures set forth in the compendium, except when there is no analytical procedure prescribed in the compendium or if the tests prescribed in the official compendium are insufficient. In these situations, FDA can follow the process outlined in the statute and issue a regulation to provide an appropriate analytical procedure. Because of the legal status of compendial analytical procedures in the act and other requirements relating to analytical procedures in the statute, FDA concurs that changes in analytical procedures to comply with an official compendium may be filed in an annual report except for changes to comply with an official compendium that result in the deletion of a test or the relaxation of an acceptance criterion and has revised the regulation accordingly. FDA wishes to emphasize that under FDA's CGMP regulations, the suitability of all analytical procedures, including compendial procedures, must be verified under actual conditions of use. For example, an assay analytical procedure where degradation products, impurities, or excipients interfere with the analysis is not considered an acceptable analytical procedure. The use of unacceptable analytical procedures, even if specified in an official compendium, can be considered a violation of the act. FDA also wishes to emphasize that a change from an approved analytical procedure that is capable of quantifying impurities to a compendial analytical procedure that cannot quantify impurities is in essence a deletion of an impurities test. This change of procedure should not be reported in an annual report, but should be reported as any other request for deletion of an approved test.

Tests and acceptance criteria: Under sections 512(b)(1)(D) and 512(n)(1)(G) of the act, an application must include a full description of the methods used in, and the facilities and controls used for, the manufacture, processing and packing of the drug. If the specifications included in the application are considered inadequate to ensure and preserve the identity, strength, quality, purity, or potency of the drug, the agency will refuse to approve the application. As previously discussed, the standards established by an official compendium may be inadequate for the purposes of approving an application under sections 512(d)(1) and 512(c)(2)(A) (21 U.S.C. 360b(d)(1)(C) and 360b(c)(2)(A)(i)) of the act.

As part of the detailed application review process and in accordance with section 512 of the act, FDA requires tests and acceptance criteria that the agency believes are necessary to ensure and preserve the identity, strength, quality, purity, and potency of the product. The specifications included in the approved application are legally binding upon the applicant, and a product that fails to comply with the specifications included in the approved application can be considered an unsafe new animal drug under section 512(a)(1) of the act. Compendial standards are often used in evaluating the specifications proposed in the application. However, compendial standards often must be supplemented with additional tests, such as a specific test for impurities, to ensure the identity, strength, quality, purity, and potency of the drug. Also, the tests and acceptance criteria in an application are often approved without the benefit of a compendial standard for a drug because no compendial standard has been established. Situations could arise where, for example, FDA requires tests and acceptance criteria for specific impurities as part of approval of an application. These impurities are not specified in an existing monograph or are not included in a monograph published subsequent to the approval of the drug. If FDA allowed all changes that comply with an official compendium to be included in an annual report, the applicant could interpret this provision as allowing it to delete the tests that are required as a condition of approving the application.

A change to relax an acceptance criterion or delete a test is considered a major change. FDA needs to review a request for this type of change in the

context of a particular NADA or ANADA to determine if the change will adversely affect the identity, strength, quality, purity, or potency of the drug. Changes such as these, when requested solely at the discretion of the applicant, must be filed in a prior approval supplement. Reporting these changes in an annual report is not appropriate. However, when a change to relax an acceptance criterion or delete a test is made to comply with a change to an official compendium, the change is considered to have a moderate potential to have an adverse effect on the identity, strength, quality, purity, or potency of the drug as these factors may relate to the safety or effectiveness of the drug. The change is considered to be moderate because: (1) The change has been reviewed by an independent, impartial group that has the goal of promoting public health, and (2) FDA has had the opportunity through the USP process of reviewing the proposed change in general, but not necessarily in the context of each individual application affected by the change. Therefore, FDA will require a changes-being-effected-in-30-days supplement for a change to relax an acceptance criterion or delete a test to comply with a change to an official compendium. A change made to comply with an official compendium that results in a tightening of an approved acceptance criterion or an addition of a test may be filed in an annual report.

The provisions in the final rule for changes to comply with an official compendium might be viewed by some as an increase in burden over how FDA has been interpreting its regulations regarding supplements in the past. However, FDA believes that the provisions are necessary and consistent with the requirements of section 506A for the establishment of the reporting category for a change based on the change's potential to adversely affect the identity, strength, quality, purity, or potency of a drug as these factors may relate to the safety or effectiveness of the drug.

For the reasons discussed previously, the agency is adding § 514.8(b)(3)(ii)(C) as follows: ''Relaxation of an acceptance criterion or deletion of a test to comply with an official compendium that is consistent with FDA statutory and regulatory requirements.'' The agency also is revising § 514.8(b)(4)(ii)(A) as follows: ''Any change made to comply with an official compendium, except a change in paragraph (b)(3)(ii)(C) of this section, that is consistent with FDA statutory and regulatory requirements.''

2. Minor Changes—Replacement of Equipment (Proposed § 514.8(b)(4)(ii)(C))

Under proposed § 514.8(b)(4)(ii)(C), the following minor change must be documented in the next annual report: Replacement of equipment with that of the same design and operating principles except for equipment used with a natural product, a recombinant DNA-derived protein/polypeptide product, or a complex or conjugate of a new animal drug with a monoclonal antibody.

(22) One comment requested deleting the words ''except for equipment used with a natural product, a recombinant DNA-derived protein/polypeptide product.'' According to the comment, singling out these products by requiring a higher classification for these changes is inappropriate, as there is no scientific basis for a blanket application of this distinction and all changes should be assessed on their potential for adverse affects on the safety or effectiveness of the product. The comment further stated that equipment for natural products (as defined in this rule) should be evaluated on the same basis as that for all other products.

Agency Response: FDA declines to revise the regulation as requested, but has revised it to provide clarity by referencing section (b)(3) in regard to exceptions for equipment replacement. As discussed in the response to comment 15, there are specific issues and concerns for these drugs as a result of scale and/or equipment changes not routinely associated with other classes of drugs. Changes to identical equipment used in the production of proteins could be reported in an annual report. However, a change to equipment of the same design and operating principle, but not identical equipment (e.g., capacity), is not considered a minor change for protein products.

3. Minor Changes—Container Changes (Proposed § 514.8(b)(4)(ii)(D))

Under proposed § 514.8(b)(4)(ii)(D), the following minor change is documented in the next annual report: A change in the size and/or shape of a container containing the same number of dosage units for a nonsterile solid dosage form, without a change from one container closure system to another.

(23) Several comments recommended deleting ''containing the same number of dosage units.'' According to the comments, for nonsterile dosage forms, the fill count of the bottle should be allowed to be changed along with the size/shape. The current language would allow size of the bottle to increase (resulting in more headspace) but the fill count to not equivalently change.

Agency Response: FDA declines to revise the regulation as requested. Due to the differences and complexities of labeling issues for animal drug products versus human drug products, regulation of labeling changes is not being harmonized with human drug product regulations. However, information regarding the reporting of labeling and other types of changes to animal drug products has been updated and consolidated under § 514.8(c). Labeling changes related to manufacturing changes, e.g., changes to the labeled storage conditions, will be identified in the final guidance.

4. Minor Changes—Code Imprints (Proposed § 514.8(b)(4)(ii)(H))

Under proposed § 514.8(b)(4)(ii)(H), the following minor change is documented in the next annual report: The addition by embossing, debossing, or engraving of a code imprint to a solid oral dosage form drug product other than a modified release dosage form, or a minor change in an existing code imprint.

(24) A few comments requested that FDA revise this provision to allow the addition of an ink imprint. Another comment said it is not clear whether the provision includes ink printing, and a cross-reference to part 206, Imprinting of Solid Oral Dosage Form Drug Products for Human Use, may also be helpful. One comment requested that wording should be added to allow for ink printing on modified dosage forms, as this should not impact drug release.

Agency Response: FDA declines to revise the regulation as requested and is clarifying that inks are not included in this provision. FDA believes that any recommendations on how to report the addition of inks is best handled in guidance documents so that the issues and conditions associated with such changes can be fully explained. For example, FDA would expect that any colors used in ink imprint would be listed for use in or on a drug in FDA regulations (see 21 CFR parts 73, 74, 81, and 82).

5. Annual Report—Required Information (Proposed § 514.8(b)(4)(iii))

Proposed § 514.8(b)(4)(iii) requires the applicant to submit in the annual report a list of all products affected by a change in this category, and: (1) A statement by the holder of the approved application that the effects of the change have been validated; (2) a full description of the manufacturing and control changes, including the manufacturing site(s) or area(s)

involved; (3) the date each change was made; (4) cross reference to relevant validation protocols and/or SOP's; (5) relevant data from studies and tests performed to evaluate the effect of the change on the identity, strength, quality, purity, or potency of the product as these factors may relate to the safety or effectiveness of the product (validation); (6) appropriate documentation (for example, updated master batch records, specification sheets, etc.) including previously approved documentation (with the change highlighted) or references to previously approved documentation; and (7) updated stability data generated on commercial or production batches according to an approved stability protocol.

(25) Several comments recommended that the reference to SOPs and the term ''validation'' be deleted, and that the agency also eliminate the requirements that the applicant submit the date each change was made and cross reference to relevant validation protocols and/or SOPs, as the data represent compliance information and are better suited for field inspections. The comments asserted that the addition of this proposed information to existing practice would result in increased regulatory burden.

Agency Response: FDA is revising the provision to clarify when validation protocols and SOPs are needed. The agency's response to comment 26 addresses the recommended deletion of providing the date each change was made. As discussed with regard to comment 11, validation protocols and data need not be filed in the application, unless otherwise specified by FDA, but should be retained at the facility and be available for review by FDA at the agency's discretion. For most drugs, FDA does not require the submission of validation protocols and data. However, for a natural protein, a recombinant DNA-derived protein/polypeptide, a complex or conjugate of a drug substance with a monoclonal antibody, or sterilization process, FDA does require the submission of validation protocols for certain critical manufacturing processes unique to these drugs. In addition, an applicant is required to submit a full description of controls used for the manufacture, processing, and packing of a drug (sections 512(b)(1)(d) and 512(n)(1)(G) of the act). This information may be submitted in different forms, including SOPs. In most cases, SOPs do not include information relevant to the NADA or ANADA review, but rather information relevant to determining an applicant's compliance with CGMPs. However, in the case of a natural product, a recombinant DNA-derived protein/polypeptide, or a complex or conjugate of a drug substance with a monoclonal antibody, or a sterilization process, information contained in SOPs is often relevant to the review of certain aspects of an application.

6. Annual Report—Provision of Date(s) of Changes (Proposed § 514.8(b)(4)(iii)(C))

(26) One comment recommended that § 514.8(b)(4)(iii)(C), which provides that the date each minor change is made be submitted in an annual report, be modified to state ''Either the date each change was made or the first lot produced using the change.'' The comment suggests that for processes that take several days, the first lot number is more appropriate than the date. The lot number allows traceability through the entire process to better determine the effect of the change.

Agency Response: FDA declines to revise the regulation as requested. The date when a change is made is important to identify the production batches that may be affected by the change. This is important for various reasons; for instance, it allows reviewers to easily compare data generated at different times to determine if there are any changes or trends in product quality over time. The reporting of a lot number may not readily indicate to the reviewer the date the change was made.

7. Annual Report—Appropriate Documentation (Proposed § 514.8(b)(4)(iii)(F))

(27) One comment stated that requiring the submission of batch records with changes highlighted is an unnecessary additional burden that will not increase the assurance of the safety, purity, or effectiveness of products, and is in contravention of the goals of the proposed rule and the intent of the Modernization Act. Batch records may be issued or reissued to correct minor typographical errors or to clarify instructions. Several versions may be issued in 1 year. Requiring the highlighting of all of these changes in the annual update is unnecessary, as batch records and their history are maintained at the manufacturing site and are available for review during inspections.

Agency Response: FDA declines to revise the regulation as requested. Under § 514.8(b)(1)(v), FDA is requiring that a list of changes be provided in both supplemental applications and annual reports. FDA proposed this requirement as a means to more efficiently locate and identify changes in what are often substantial documents. It is expected that any change to an approved document (e.g., master batch record, raw material specification sheet, analytical method procedure, etc.), other than a minor editorial or format change, results in an updated document that must be included as part of the supplemental application or annual report. Highlighting the proposed or implemented change(s), other than editorial or format change(s), will allow the reviewer to easily review and assess the impact of these change(s), if any, on the identity, strength, quality, purity or potency of a drug as these factors may relate to the safety or effectiveness of the drug. For changes reported in the annual report, it is expected only the most recently revised document at the time of preparation be submitted with the minor changes highlighted and with a copy of the previously approved document (or reference to where this document can be found in the new animal drug file).

Section 506A(d)(2)(A) also states in part that a holder making a certain type of manufacturing change shall submit a report on the change ''which shall contain such information as the Secretary determines to be appropriate* * *.'' Therefore, for new animal drugs, FDA determines that this requirement is appropriate for ease of review and assessment of the impact of a minor change(s).

F. Labeling and Other Changes to an Approved Application

1. Approved Application—Labeling and Other Changes (Proposed § 514.8(c))

Proposed § 514.8(c) describes labeling and other changes to an approved application.

(28) One comment stated that this section appears to eliminate the ability to report minor changes to labeling in an annual update. According to the comment, label changes are classified as major changes (§ 514.8(c)(2)) or requiring a written notice of a supplemental application—Changes Being Effected (§ 514.8(c)(3)). It is requested that this section be clarified and the opportunity to submit minor changes in an annual update be added. Labeling changes unrelated to product effectiveness or safety should be permitted as minor changes and included in annual reporting. The accompanying guidance document should be expanded to address labeling changes.

Agency Response: FDA declines to revise the provision as requested. However, FDA agrees that a few labeling changes (e.g., changes to the labeled storage condition to be submitted in a

prior approval supplement) are more appropriately reported to and reviewed by FDA/CVM's Division of Manufacturing Technologies in either a prior approval supplement, changes-being-effected supplement, or annual report, i.e., minor changes and stability reports. Labeling changes more appropriately submitted to the Division of Manufacturing Technologies, including those labeling changes that can be reported in an annual report, will be described in the final version of the companion guidance document. Labeling changes (for example, design and style) that do not decrease safety of drug use and that are proposed in supplemental applications may be placed into effect prior to written notice of approval from FDA of a supplemental application (§ 514.8(c)(3)(ii)).

2. Approved Applications—General Provisions for Labeling and Other Changes (Proposed § 514.8(c)(1))

Proposed § 514.8(c)(1) states that the applicant must notify FDA about each change in each condition established in an approved application beyond the variations already provided for in the application. The notice is required to describe the change fully.

(29) One comment recommended that the statement ''Any change made in labeling to comply with an official compendium may be submitted in the annual report'' be included in proposed § 514.8(c)(1) as follows: ''(1) General Provisions. The applicant must notify FDA about each change in each condition established in an approved application beyond the variations already provided for in the application. The notice is required to describe the change fully. Any change made in labeling to comply with an official compendium may be submitted in the annual report.''

Agency Response: FDA declines to revise the provision as requested. While the labeling requirements in the USP/NF are legally enforceable standards for determining whether a product is misbranded under section 502 of the act, use of these standards alone does not ensure compliance with the act. Moreover, the USP states that ''Articles in this Pharmacopoeia are subject to compliance with such labeling requirements as may be promulgated by governmental bodies in addition to the Pharmacopoeial requirements set forth for the articles.'' (U.S.P. 29, General Notices, Labeling).

3. Labeling Changes and § 514.80 (Proposed § 514.8(c)(2)(C)(3))

Proposed § 514.8(c)(2)(C)(3) provides that the prescription drug labeling not requiring an approved supplemental application is submitted in accordance with § 514.80(b)(3)(ii). Proposed § 514.8(c)(4) describes ''Changes providing for additional distributors to be reported under Records and reports concerning experience with new animal drugs for which an approved application is in effect'' (§ 514.80). According to § 514.8(c)(4), supplemental applications as described under § 514.8(c)(2) will not be required for an additional distributor to distribute a drug that is the subject of an approved new animal drug application if the conditions described under § 514.80(a)(2), (b)(3), and (b)(5)(iii) are met.

(30) One comment recommended that the reference to § 514.80 be removed since it refers to a non-existent rule.

Agency Response: The final rule for § 514.80 was published on March 31, 2003 (68 FR 15365). Therefore, the agency is retaining the reference to § 514.80.

G. Implementation of the Final Rule and Guidance

(31) One comment recommended that the proposed rule and draft guidance be withdrawn in order to allow development of a revised proposed rule and associated industry guidance that clearly reflect the intent of Congress, as required by the Modernization Act. The comment also encouraged FDA to work in collaboration with the industry in crafting improved versions of these important regulations. The comment contends that the proposal and guidance fails to address and fulfill the intent of the Modernization Act, a substantial number of individual issues in the proposed rule and guidance require revision, there was a lack of industry and public involvement in drafting the documents, and the time provided by FDA for the evaluation, comment, and considered revisions was too short.

Agency Response: FDA declines to withdraw the proposed rule and guidance. FDA's procedures for rulemaking are governed by the Administrative Procedure Act (5 U.S.C. 553) and set forth in FDA regulations at 21 CFR 10.40 and 10.80. Guidances are developed in accordance with FDA's good guidance practices (GGPs) (see the **Federal Register** of September 19, 2000 (65 FR 56468) and 21 CFR 10.115). As discussed previously in this document, the use of guidance documents will allow FDA to more easily and quickly modify and update important information. Moreover, section 506A of the act explicitly provides FDA the authority to use guidance documents to determine the type of changes that do or do not have a substantial potential to adversely affect the safety or effectiveness of the drug. In the October 1, 1999 proposal, FDA proposed to implement section 506A of the act for NADAs and ANADAs. In that same issue of the **Federal Register**, FDA announced the availability of a draft guidance for industry entitled ''Chemistry, Manufacturing and Control Changes to an Approved NADA or ANADA'' to assist applicants in determining how they should report changes to an approved application. FDA allowed for public participation in the development of the regulation and guidance consistent with FDA regulations and policy and to the extent practicable. The time period to provide public comment was consistent with FDA's regulations and statutory requirements. FDA also held a public meeting on August 19, 1999, to hear comments on the guidance and the proposed rule. FDA has carefully considered the public comments and believes that the final regulation and guidance provide for significant reduction in regulatory burden and comply fully with section 506A of the act.

(32) One comment noted that the animal drug industry has been very pleased with the successful 1996 CVM initiative, ''Alternate Administrative Process for the Implementation and Submission of Supplemental Chemistry, Manufacturing and Control Changes (AAP),'' and their support of the Modernization Act was given based on their legal interpretation that the Modernization Act did not preclude the continuation of the AAP program. The comment further stated that the AAP program very succinctly provided a process for determining minor supplemental chemistry, manufacturing, and control changes that are reported on a biennial basis; as such, the concepts embodied in the AAP are strongly supported. There is concern that implementation of the proposed rule will be more burdensome than the AAP on both FDA and industry. Therefore, the proposed rule will be a significant step backwards.

Agency Response: The AAP program has been superseded by section 506A of the act and the revised § 514.8 regulations. Section 506A of the act does not allow for the reporting of minor manufacturing changes in biennial supplements (as allowed in the AAP program) rather than annual reports. FDA disagrees that the proposed rule will be a significant step backwards from the AAP program since the proposed rule and supporting guidance will allow more flexibility in

the reporting of moderate changes in immediate changes-being-effected or 30-day-changes-being-effected supplemental applications. Implementation of moderate changes under the past regulations or under the AAP program would have required a prior approval supplement and would not have been considered appropriate for filing under the AAP program.

H. General Comments

(33) Several comments argued that the proposal does not meet the intent of Congress or Section 116 of the Modernization Act. The comments stated that Congress expected substantial improvement in the management of technical supplements for manufacturing changes, but that: (1) The proposed rule does not provide significant regulatory relief, (2) significant numbers of additional new categories of manufacturing changes requiring prior approval supplements have been added without evidence of the need or a scientific rationale for such additional requirements, (3) there are no new approaches to the regulations and guidances for manufacturing changes, and (4) the reporting burden would be substantially increased.

Agency Response: FDA believes that these regulations are consistent with the intent of Congress and the regulatory requirements and reporting categories are consistent with section 506A of the act. The regulations provide a new approach to regulating post-approval manufacturing changes. The approach is based on the potential for a change to adversely affect the identity, strength, quality, purity, or potency of the drug as these factors relate to the safety or effectiveness of the drug. The regulations and its companion guidance will provide significant regulatory relief by allowing post-approval manufacturing changes to be implemented more rapidly, while still ensuring the identity, strength, quality, purity, and potency of the drug. Under this final rule, many of these same changes can now be reported in changes-being-effected supplements or annual reports. In contrast, under the previous regulations, almost all manufacturing changes required FDA approval prior to implementation. As an example, the previous regulations required prior approval for all manufacturing site changes for drug products. Now, fewer types of animal drug manufacturing site changes will require submission in prior approval supplements. Many will be submitted in a changes-being-effected-in-30-days supplement or in the annual report.

(34) Several comments stated that if appropriate studies comparing pre- and post-change material are performed (as required) and no evidence of an adverse effect is found, then a reduced reporting structure for the evaluated change is appropriate. One comment added that the FDA should adopt a ''decision tree'' or ''key questions'' approach in implementing Section 116 of the Modernization Act. The decision tree approach would base regulatory reporting requirements on the results of scientific comparison of the quality of a drug product both pre- and post-change. Thus, the decision tree would focus on answering key questions rather than producing an exhaustive categorization of potential types of changes.

Agency Response: FDA agrees that decision trees are a viable approach to post-approval manufacturing changes. However, a decision or decision tree that does not consider the potential for a change to have an adverse effect is not consistent with section 506A of the act. The act bases the reporting category for a change on the potential for that change to have an adverse effect, not on the outcome of the assessment studies. In some cases, based on the potential for an adverse effect, FDA would expect to review a change prior to distribution of the drug made with the change, even if the applicant concludes that its studies and data demonstrate that the change has no significant adverse effect. FDA must evaluate whether the studies performed by the applicant are sufficient to assess the effects of the change, and that the data support the applicant's claim that the change has not adversely affected the identity, strength, quality, purity, or potency of the drug as these factors may relate to the safety and effectiveness of the drug.

FDA regulates a wide range of products, and a decision tree should address the fact that the potential for an adverse effect will vary depending on such factors as the dosage form and route of administration. For example, in general, a packaging change that involves a parenteral drug product is viewed by FDA to have a higher potential to cause an adverse effect on the quality of the drug product as it relates to the drug's safety and effectiveness than a packaging change for a solid oral dosage form product. One rationale for FDA's increased concern is that leaching from packaging for parenteral drug products is more likely to occur than for solid oral dosage forms; therefore, a higher potential for adverse reactions due to the route of administration may occur. A safety determination by FDA must be made. A decision tree that does not address these differences in the potential for a change to adversely affect the identity, strength, quality, purity, or potency of a drug as these factors relate to the safety or effectiveness of the drug would not be consistent with section 506A of the act.

(35) Several comments stated that FDA has not presented evidence of the substantial adverse impact of the proposed rule and the accompanying draft guidance. The requirement for FDA to present such evidence was a clearly stated expectation during the development and enactment of the manufacturing provisions of the Modernization Act.

Agency Response: FDA has examined the impact of the proposed rule under Executive Order 12866, the Regulatory Flexibility Act (5 U.S.C. 601–612), and the Unfunded Mandates Reform Act of 1995 (Public Law 104–4). The discussion of the analysis of impacts is in section VII of the preamble to the final rule.

(36) Several comments resubmitted comments previously provided to the agency on the draft guidances entitled ''BACPAC I,'' ''Changes to an Approved NDA or ANDA,'' and ''Chemistry, Manufacturing and Control Changes to an Approved NADA or ANADA,'' requesting that FDA consider these comments in finalizing the proposed regulation.

Agency Response: FDA has considered the resubmitted comments to the extent that they were applicable to the proposed regulation.

(37) Another comment stated that FDA should provide for realistic and workable filing mechanisms and requirements with regard to changes in the manufacture of drug substances where the relevant information already is included in drug master files.

Agency Response: The regulations and companion guidance for industry provide recommendations on reporting changes in the conditions established in an approved application, including changes in the drug substance covered by master files. Issues relating to master files and how these are used in the application review process are outside the scope of this regulation.

IV. Unrelated Referenced Comments to the Proposed Rule

(Comments (38) through (40)). One comment recommended for the human drug regulations under § 314.70(b)(2)(v) that ''labeling'' be clarified to ''drug product labeling'' Another comment suggested that the final sentence in § 314.70(c)(1) be changed to ''If the change concerns labeling only, include.'' Yet another comment recommended that the phrase ''* * *a

distributor's name or editorial changes to comply with an official compendium'' be added to § 314.70(d)(2)(x).

Agency Response: These comments are outside the scope of this final rule. Therefore, the agency declines to address them at this time.

V. Conforming Amendments

FDA has made conforming changes in §§ 25.33, 500.25, 514.106, and 558.5 because of the reorganization of the existing information or introduction of new requirements.

VI. Environmental Impact

The agency has determined under 21 CFR 25.30(h) that this action is of a type that does not individually or cumulatively have a significant effect on the human environment. Therefore, neither an environmental assessment nor an environmental impact statement is required.

VII. Analysis of Impacts

FDA has examined the impacts of the final rule under Executive Order 12866 and the Regulatory Flexibility Act (5 U.S.C. 601–612), and the Unfunded Mandates Reform Act of 1995 (Public Law 104–4). Executive Order 12866 directs agencies to assess all costs and benefits of available regulatory alternatives and, when regulation is necessary, to select regulatory approaches that maximize net benefits (including potential economic, environmental, public health and safety, and other advantages; distributive impacts; and equity). The agency believes that this final rule is not a significant regulatory action under the Executive order.

The Regulatory Flexibility Act requires agencies to analyze regulatory options that would minimize any significant impact of a rule on small entities. Because small businesses will likely incur a net benefit while only incurring negligible costs, the agency certifies that the final rule will not have a significant economic impact on a substantial number of small entities.

Section 202(a) of the Unfunded Mandates Reform Act of 1995 requires that agencies prepare a written statement, which includes an assessment of anticipated costs and benefits, before proposing ''any rule that includes any Federal mandate that may result in the expenditure by State, local, and tribal governments, in the aggregate, or by the private sector, of $100,000,000 or more (adjusted annually for inflation) in any one year.'' The current threshold after adjustment for inflation is $122 million, using the most current (2005) Implicit Price Deflator for the Gross Domestic Product. FDA does not expect this final rule to result in any 1-year expenditure that would meet or exceed this amount.

FDA proposed amendments to 21 CFR 514.8 that would implement section 506A of the act (64 FR 53281). This section establishes reporting procedures and requirements for making major and other manufacturing changes to an approved NADA or ANADA. The intent of section 506A of the act is to permit sponsors to use a less burdensome notification procedure for some types of manufacturing changes. Downgrading the level of agency review for some of these supplements is expected to lead to compliance cost savings due to the resulting improvement in manufacturing efficiencies. This final rule makes some minor changes to the proposed rule but does not alter the basic reporting structure as outlined in the proposal.

Although the proposed rule would have increased manufacturing efficiencies, we did not estimate the value of the expected improvements due to the myriad of factors affecting the production schedules of animal drugs. Comments to the proposed rule have not provided any more data or arguments that add to, or refute, this position. Therefore, we retain it for this final rule. The final rule will result in shorter average lag times between the decision to make certain changes to the manufacturing process for an animal drug and the time at which that change can be implemented. A report by the Eastern Research Group (ERG), an FDA contractor, on the effects of the human drug Scale-Up and Post-Approval Change Guidance for Immediate Release Solid Oral Dosage Form (SUPAC-IR), concluded that this type of supplement change often results in significant net savings to industry. In particular, the report found that companies gain greater control over their production resources and ''shorter waiting times for changes that can now be filed as Changes Being Effected (CBEs) or annual reports'' (Ref. 1).

We received many comments to the proposed rule that stated that the new supplement reporting structure would impose new reporting burdens on industry. Those comments have been addressed previously in this preamble. Our interpretation of the current regulations leads us to conclude that this final rule would not impose more than minimal additional reporting burdens, as described in the proposed rule and this section. Further, the final rule retains and reiterates our initial estimate of the number of manufacturing changes that could be made more quickly as a result of the lower level of agency review of certain manufacturing supplements.

The final rule contains four reporting categories for supplemental chemistry, manufacturing and control (CMC) changes, whereas the current regulation § 514.8 contains three. The first category concerns those changes requiring approval prior to implementation and defines what constitutes a ''major'' change. These requirements are very similar to those in the existing regulation, but clarify some of the existing language. The second category is a new ''30-day changes being effected,'' or 30-day CBE category. The purpose of this new category is to provide for a less burdensome method of reporting some ''moderate'' CMC changes that previously were reported as major changes requiring approval before implementation. The firm submitting the supplement will be able to implement the change more quickly as it will no longer require agency approval before implementation.

The third category concerns those supplemental changes that can be effected upon receipt by FDA of the supplemental application. The current regulation concerning this reporting category contained language that allowed for the change ''at the earliest possible time,'' while the Modernization Act specifically dictates that the change be allowed at the time of agency receipt of the supplement. The fourth category concerns the minor manufacturing changes and updated stability data to be submitted in a periodic minor changes and stability report (MCSR). This annual MCSR replaces the current regulation that also requires an annual report of these changes.

Based on prior year submissions, the agency estimates that CVM will receive about 1,188 CMC supplements annually. According to estimates from agency reviewers, about 755 of these would have required preapproval under the current regulation. Under the final rule, the number requiring preapproval is estimated at 234. The difference of 521 supplements represents the approximate number of additional changes that can be made without prior agency approval. Companies submitting these supplements will have the opportunity to make quicker changes and realize increased manufacturing efficiencies.

Further savings are expected from another provision of the rule that concerns labeling supplements. Currently, labeling supplements are required to include nine copies of the labeling in the submission. The final rule would lower this requirement to

two copies, providing further savings for industry. Although this rule also reorganizes the rules for labeling supplements, the agency does not expect these changes to alter the number of labeling supplements submitted annually.

The creation of the annual MCSR may provide additional opportunity for savings because it may include minor manufacturing changes that were previously submitted as CBEs or other supplement types that require a higher level of review. Under the final rule, each firm will be able to accumulate and submit them together each year, rather than individually.

Regulatory Flexibility Analysis

The Regulatory Flexibility Act (as amended by the Small Business Regulatory Enforcement Fairness Act) requires agencies to analyze regulatory options to minimize any significant impact on small entities. The final rule implements section 506A of the act. The intent of the rule is to clarify the regulations for submitting supplements to new animal drugs applications, harmonize the regulations with those for human drugs, and lessen the compliance burden for some supplements by reducing the level of agency review necessary before implementation of the change. The effects of these changes will be spread across all firms that submit supplements, regardless of their size. The Small Business Administration limits small businesses affected by this final rule to those manufacturers with fewer than 750 employees. In the proposed rule, the agency certified that the rule will not have a significant effect on a substantial number of small entities. This certification was based in part on the agency's belief that small businesses are more likely to realize a benefit from this regulation because they are more likely to submit reports of minor changes as prior approval supplements. While we recognized that a few small firms may have to start submitting an annual report rather than a biennial supplement, we did not believe that this would impose a significant cost on small businesses. We received no comments on small business impacts that lead us to change this position. Therefore, the agency certifies that the rule will not have a significant effect on a substantial number of small entities.

VIII. Paperwork Reduction Act of 1995

This final rule contains information collection provisions that are subject to review by the Office of Management and Budget (OMB) under the Paperwork Reduction Act of 1995 (44 U.S.C. 3501–3520). The title, description, and respondent description of the information collection provisions are shown below with an estimate of the annual reporting burden. Included in the estimate is the time for reviewing instructions, searching existing data sources, gathering and maintaining the data needed, and completing and reviewing each collection of information.

Title: Supplements and Other Changes to Approved New Animal Drug Applications

Description: The FDA with this final rule is amending its regulations on supplements and other changes to an approved NADA or ANADA to implement the manufacturing changes provisions of section 506A of the act. Under § 514.8(b)(2), the regulation describes reporting requirements for submission and approval of a supplement prior to distribution of the drug made using the change (major change). Section 514.8(b)(3)(i) describes reporting requirements for submission of a supplement at least 30 days prior to distribution of the drug made using the change (moderate change). Section 514.8(b)(3)(vi) describes reporting requirements for a category of supplemental changes designated by the agency which allows the holder of an approved application to commence distribution of the drug involved upon receipt by the agency of a supplement for the change. Section 514.8(b)(4)(iii) provides requirements for changes and updated stability data to be submitted in an annual report (minor changes). Section 514.8(c)(2)(ii) describes reporting requirements for labeling and other changes requiring submission and approval of a supplement prior to distribution of the drug made using the change (major change). Section 514.8 (c)(3)(iii) provides reporting requirements for labeling changes to be placed in effect prior to receipt of written notice of approval of a supplemental application, and § 514.8(c)(4) describes reporting requirements for changes providing for additional distributors to be reported under § 514.80, records and reports concerning experience with approved new animal drugs.

Description of Respondents: Sponsors of new animal drug applications.

FDA estimates the burden of this collection of information as follows.

TABLE 1.—ESTIMATED ANNUAL REPORTING BURDEN[1]

21 CFR Section	No. Of Respondents	No. Of Responses Per Respondent	Total Annual Responses	Hours per Response	Total Hours
514.8(b)(2)	40	5.9	234	100	23,400
514.8(b)(3)(i)	40	5.0	200	40	8,000
514.8(b)(3)(vi)	40	3.6	145	40	5,800
514.8(b)(4)(iii)	40	15.2	609	40	24,360
514.8(c)(2)(ii)	40	0.3	10	100	1,000
514.8(c)(3)(iii)	40	0.5	20	40	800
514.8(c)(4)	40	0.3	10	20	200
Total					63,560

[1]There are no capital costs or operating and maintenance costs associated with this collection of information.

FDA announced that the proposed rule contained information collection provisions that were subject to review by OMB under the Paperwork Reduction Act of 1995 and invited public comment (64 FR 53281). In

response to that notice, FDA did not receive any comments regarding the information collection requirements contained in the final rule. However, with the use of improved technology, CVM performed a retrospective burden analysis resulting in an adjustment to the previous burden table that was published in the October 1, 1999, **Federal Register**. CVM examined fiscal year 2003 data for its analysis and using CVM's database, for tracking submissions including supplements to NADAs and ANDAs, was able to determine the number of respondents and the types and number of supplements submitted that year. The number of respondents (40) is the approximate number of sponsors of New Animal Drug Applications and Abbreviated New Animal Drug Applications that submitted supplemental applications. This number was determined by using a retrospective analysis of supplements actually received by CVM for fiscal year 2003. The number of responses per respondent was obtained by dividing the ''Total Annual Responses'' by the ''Number of Respondents.'' The ''Total Annual Responses'' are the actual manufacturing supplement numbers, i.e., completed submissions for the analysis year (fiscal year 2003).

The information collection provisions of this final rule have been submitted to OMB for review. Prior to the effective date of this final rule, FDA will publish a notice in the **Federal Register** announcing OMB's decision to approve, modify, or disapprove the information collection provisions in this final rule. An agency may not conduct or sponsor, and a person is not required to respond to, a collection of information unless it displays a currently valid OMB control number.

IX. Federalism

FDA has analyzed this final rule in accordance with the principles set forth in Executive Order 13132. FDA has determined that the rule does not contain policies that have substantial direct effects on the States, on the relationship between the National Government and the States, or on the distribution of power and responsibilities among the various levels of government. Accordingly, the agency has concluded that the rule does not contain policies that have federalism implications as defined in the Executive order, and, consequently, a federalism summary impact statement is not required.

X. References

The following reference has been placed on display in the Dockets Management Branch (see **ADDRESSES**) and may be seen by interested persons between 9 a.m. and 4 p.m., Monday through Friday.

1. Eastern Research Group, *Pharmaceutical Industry Cost Savings Through Use of the Scale-Up and Post-Approval Guidance for Immediate Release Solid Oral Dosage Forms (SUPAC-IR)*, January 7, 1998, Contract Number 223-94-8031, page 8.

List of Subjects

21 CFR Part 25

Environmental impact statements, Foreign relations, Reporting and recordkeeping requirements.

21 CFR Part 500

Animal drugs, Animal feeds, Cancer, Labeling, Packaging and containers, Polychlorinated biphenyls (PCB's).

21 CFR Part 514

Administrative practice and procedure, Animal drugs, Confidential business information, Reporting and recordkeeping requirements.

21 CFR Part 558

Animal drugs, Animal feeds.

■ Therefore, under the Federal Food, Drug, and Cosmetic Act and under authority delegated to the Commissioner of Food and Drugs, 21 CFR parts 25, 500, 514, and 558 are amended as follows:

PART 25—ENVIRONMENTAL IMPACT CONSIDERATIONS

■ 1. The authority citation for 21 CFR part 25 continues to read as follows:

Authority: 21 U.S.C. 321–393; 42 U.S.C. 262, 263b–264; 42 U.S.C. 4321, 4332; 40 CFR parts 1500–1508; E.O. 11514, 35 FR 4247, 3 CFR, 1971 Comp., p. 531–533 as amended by E.O. 11991, 42 FR 26967, 3 CFR, 1978 Comp., p. 123–124 and E.O. 12114, 44 FR 1957, 3 CFR, 1980 Comp., p. 356–360.

§ 25.33 [Amended]

■ 2. Section 25.33 is amended in paragraph (a)(4) by removing ''514.8(a)(5), (a)(6), or (d)'' and by adding in its place ''514.8(b)(3), (b)(4), or (c)(3).''

PART 500—GENERAL

■ 3. The authority citation for 21 CFR part 500 continues to read as follows:

Authority: 21 U.S.C. 321, 331, 342, 343, 348, 351, 352, 353, 360b, 371.

§ 500.25 [Amended]

■ 4. Section 500.25 is amended in the first sentence of paragraph (c) by removing ''514.8(d) and (e)'' and by adding in its place ''514.8(c)(3).''

PART 514—NEW ANIMAL DRUG APPLICATIONS

■ 5. The authority citation for 21 CFR part 514 is revised to read as follows:

Authority: 21 U.S.C. 321, 331, 351, 352, 356a, 360b, 371, 379e, 381.

■ 6. Section 514.8 is revised to read as follows:

§ 514.8 Supplements and other changes to an approved application.

(a) *Definitions*. (1) The definitions and interpretations contained in section 201 of the Federal Food, Drug, and Cosmetic Act (the act) apply to those terms when used in this part.

(2) The following definitions of terms apply to this part:

(i) *Assess the effects of the change* means to evaluate the effects of a manufacturing change on the identity, strength, quality, purity, and potency of a drug as these factors may relate to the safety or effectiveness of the drug.

(ii) *Drug substance* means an active ingredient as defined under § 210.3(b)(7) of this chapter.

(iii) *Minor changes and stability report (MCSR)* means an annual report that is submitted to the application once each year within 60 days before or after the anniversary date of the application's original approval or on a mutually agreed upon date. The report must include minor manufacturing and control changes made according to § 514.8(b)(4) or state that no changes were made; and stability data generated on commercial or production batches according to an approved stability protocol or commitment.

(iv) *Specification* means the quality standard (i.e., tests, analytical procedures, and acceptance criteria) provided in an approved application to confirm the quality of drugs including, for example, drug substances, Type A medicated articles, drug products, intermediates, raw materials, reagents, components, in-process materials, container closure systems, and other materials used in the production of a drug. For the purpose of this definition, the term ''acceptance criteria'' means numerical limits, ranges, or other criteria for the tests described.

(b) *Manufacturing changes to an approved application*—(1) *General provisions*. (i) The applicant must notify FDA about each change in each condition established in an approved application beyond the variations already provided for in the application. The notice is required to describe the change fully. Depending on the type of

change, the applicant must notify FDA about it in a supplement under paragraph (b)(2) or (b)(3) of this section or by inclusion of the information in the annual report to the application under paragraph (b)(4) of this section.

(ii) The holder of an approved application under section 512 of the act must assess the effects of the change before distributing a drug made with a manufacturing change.

(iii) Notwithstanding the requirements of paragraphs (b)(2) and (b)(3) of this section, an applicant must make a change provided for in those paragraphs in accordance with a regulation or guidance that provides for a less burdensome notification of the change (for example, by submission of a supplement that does not require approval prior to distribution of the drug, or by notification in the next annual report described in paragraph (b)(4) of this section).

(iv) In each supplement and amendment to a supplement providing for a change under paragraph (b)(2) or (b)(3) of this section, the applicant must include a statement certifying that a field copy has been provided to the appropriate FDA district office. No field copy is required for a supplement providing for a change made to a drug manufactured outside of the United States.

(v) A supplement or annual report described in paragraph (b)(4) of this section must include a list of all changes contained in the supplement or annual report. For supplements, this list must be provided in the cover letter.

(2) *Changes requiring submission and approval of a supplement prior to distribution of the drug made using the change (major changes).* (i) A supplement must be submitted for any change in the drug, production process, quality controls, equipment, or facilities that has a substantial potential to have an adverse effect on the identity, strength, quality, purity, or potency of the drug as these factors may relate to the safety or effectiveness of the drug.

(ii) These changes include, but are not limited to:

(A) Except those described in paragraphs (b)(3) and (b)(4) of this section, changes in the qualitative or quantitative formulation of the drug, including inactive ingredients, or in the specifications provided in the approved application;

(B) Changes requiring completion of appropriate clinical studies to demonstrate the equivalence of the drug to the drug as manufactured without the change;

(C) Changes that may affect drug substance or drug product sterility assurance, such as changes in drug substance, drug product or component sterilization method(s) or an addition, deletion, or substitution of steps in an aseptic processing operation;

(D) Changes in the synthesis or manufacture of the drug substance that may affect the impurity profile and/or the physical, chemical, or biological properties of the drug substance;

(E) Changes in a drug product container closure system that controls the drug delivered to the animal or changes in the type or composition of a packaging component that may affect the impurity profile of the drug product;

(F) Changes solely affecting a natural product, a recombinant DNA-derived protein/polypeptide, or a complex or conjugate of a drug substance with a monoclonal antibody for the following:

(*1*) Changes in the virus or adventitious agent removal or inactivation method(s),

(*2*) Changes in the source material or cell line, and

(*3*) Establishment of a new master cell bank or seed;

(G) Changes to a drug under an application that is subject to a validity assessment because of significant questions regarding the integrity of the data supporting that application.

(iii) The applicant must obtain approval of a supplement from FDA prior to distribution of a drug made using a change under paragraph (b)(2) of this section. The supplement must be labeled ''Prior Approval Supplement.'' Except for submissions under paragraph (b)(2)(v) of this section, the following information must be contained in the supplement:

(A) A completed Form FDA 356V;

(B) A detailed description of the proposed change;

(C) The drug(s) involved;

(D) The manufacturing site(s) or area(s) affected;

(E) A description of the methods used and studies performed to assess the effects of the change;

(F) The data derived from such studies;

(G) Appropriate documentation (for example, updated master batch records, specification sheets) including previously approved documentation (with the changes highlighted) or references to previously approved documentation;

(H) For a natural product, a recombinant DNA-derived protein/polypeptide, or a complex or conjugate of a drug substance with a monoclonal antibody, relevant validation protocols and standard operating procedures must be provided in addition to the requirements in paragraphs (b)(2)(iii)(E) and (b)(2)(iii)(F) of this section;

(I) For sterilization process and test methodologies related to sterilization process validation, relevant validation protocols and a list of relevant standard operating procedures must be provided in addition to the requirements in paragraphs (b)(2)(iii)(E) and (b)(2)(iii)(F) of this section; and

(J) Any other information as directed by FDA.

(iv) An applicant may ask FDA to expedite its review of a supplement for public health reasons or if a delay in making the change described in it would impose an extraordinary hardship on the applicant. Such a supplement and its mailing cover must be plainly marked: ''Prior Approval Supplement-Expedited Review Requested.''

(v) *Comparability Protocols.* An applicant may submit one or more protocols describing the specific tests and studies and acceptance criteria to be achieved to demonstrate the lack of adverse effect for specified types of manufacturing changes on the identity, strength, quality, purity, and potency of the drug as these factors may relate to the safety or effectiveness of the drug. Any such protocols, if not included in the approved application, or changes to an approved protocol, must be submitted as a supplement requiring approval from FDA prior to distribution of the drug produced with the manufacturing change. The supplement, if approved, may subsequently justify a reduced reporting category for the particular change because the use of the protocol for that type of change reduces the potential risk of an adverse effect. A comparability protocol supplement must be labeled ''Prior Approval Supplement—Comparability Protocol.''

(3) *Changes requiring submission of a supplement at least 30 days prior to distribution of the drug made using the change (moderate changes).* (i) A supplement must be submitted for any change in the drug, production process, quality controls, equipment, or facilities that has a moderate potential to have an adverse effect on the identity, strength, quality, purity, or potency of the drug as these factors may relate to the safety or effectiveness of the drug.

(ii) These changes include, but are not limited to:

(A) A change in the container closure system that does not affect the quality of the drug except as otherwise described in paragraphs (b)(2) and (b)(4) of this section;

(B) Changes solely affecting a natural protein, a recombinant DNA-derived protein/polypeptide or a complex or conjugate of a drug substance with a monoclonal antibody, including:

(*1*) An increase or decrease in production scale during finishing steps that involves different equipment, and

(*2*) Replacement of equipment with that of a different design that does not affect the process methodology or process operating parameters.

(C) Relaxation of an acceptance criterion or deletion of a test to comply with an official compendium that is consistent with FDA statutory and regulatory requirements.

(iii) A supplement submitted under paragraph (b)(3)(i) or (b)(3)(vi) of this section is required to give a full explanation of the basis for the change and identify the date on which the change is made. The supplement submitted under paragraph (b)(3)(i) must be labeled ''Supplement-Changes Being Effected in 30 Days.''

(iv) Pending approval of the supplement by FDA and except as provided in paragraph (b)(3)(vi) of this section, distribution of the drug made using the change may begin not less than 30 days after receipt of the supplement by FDA. The information listed in paragraphs (b)(2)(iii)(A) through (b)(2)(iii)(J) of this section must be contained in the supplement.

(v) The applicant must not distribute the drug made using the change if within 30 days following FDA's receipt of the supplement, FDA informs the applicant that either:

(A) The change requires approval prior to distribution of the drug in accordance with paragraph (b)(2) of this section; or

(B) Any of the information required under paragraph (b)(3)(iv) of this section is missing. In this case, the applicant must not distribute the drug made using the change until the supplement has been amended to provide the missing information.

(vi) The agency may designate a category of changes for the purpose of providing that, in the case of a change in such category, the holder of an approved application may commence distribution of the drug involved upon receipt by the agency of a supplement for the change. The information listed in paragraphs (b)(2)(iii)(A) through (b)(2)(iii)(J) of this section must be contained in the supplement. The supplement must be labeled ''Supplement-Changes Being Effected.'' These changes include, but are not limited to:

(A) Addition to a specification or changes in the methods or controls to provide increased assurance that the drug will have the characteristics of identity, strength, quality, purity, or potency that it purports or is represented to possess; and

(B) A change in the size and/or shape of a container for a nonsterile drug product, except for solid dosage forms, without a change in the labeled amount of drug product or from one container closure system to another.

(vii) If the agency disapproves the supplemental application, it may order the manufacturer to cease distribution of the drug(s) made with the manufacturing change.

(4) *Changes and updated stability data to be described and submitted in an annual report (minor changes).* (i) Changes in the drug, production process, quality controls, equipment, or facilities that have a minimal potential to have an adverse effect on the identity, strength, quality, purity, or potency of the drug as these factors may relate to the safety or effectiveness of the drug must be documented by the applicant in an annual report to the application as described under paragraph (a)(2)(iii) of this section. The report must be labeled ''Minor Changes and Stability Report.''

(ii) These changes include but are not limited to:

(A) Any change made to comply with a change to an official compendium, except a change in paragraph (b)(3)(ii)(C) of this section, that is consistent with FDA statutory and regulatory requirements;

(B) The deletion or reduction of an ingredient intended to affect only the color of the drug product;

(C) Replacement of equipment with that of the same design and operating principles except for those equipment changes described in paragraph (b)(3)(ii)(B)(2) of this section;

(D) A change in the size and/or shape of a container containing the same number of dosage units for a nonsterile solid dosage form drug product, without a change from one container closure system to another;

(E) A change within the container closure system for a nonsterile drug product, based upon a showing of equivalency to the approved system under a protocol approved in the application or published in an official compendium;

(F) An extension of an expiration dating period based upon full shelf-life data on production batches obtained from a protocol approved in the application;

(G) The addition or revision of an alternative analytical procedure that provides the same or increased assurance of the identity, strength, quality, purity, or potency of the drug being tested as the analytical procedure described in the approved application, or deletion of an alternative analytical procedure; and

(H) The addition by embossing, debossing, or engraving of a code imprint to a solid oral dosage form drug product other than a modified release dosage form, or a minor change in an existing code imprint.

(iii) For changes under this category, the applicant is required to submit in the annual report:

(A) A completed Form FDA 356V;

(B) A statement by the holder of the approved application that the effects of the change have been assessed;

(C) A detailed description of the change(s);

(D) The manufacturing site(s) or area(s) involved;

(E) The date each change was implemented;

(F) Data from studies and tests performed to assess the effects of the change;

(G) For a natural product, recombinant DNA-derived protein/polypeptide, complex or conjugate of a drug substance with a monoclonal antibody, sterilization process or test methodology related to sterilization process validation, relevant validation protocols and/or standard operating procedures;

(H) Appropriate documentation (for example, updated master batch records, specification sheets, etc.) including previously approved documentation (with the changes highlighted) or references to previously approved documentation;

(I) Updated stability data generated on commercial or production batches according to an approved stability protocol or commitment; and

(J) Any other information as directed by FDA.

(c) *Labeling and other changes to an approved application*—(1) *General provisions.* The applicant must notify FDA about each change in each condition established in an approved application beyond the variations already provided for in the application. The notice is required to describe the change fully.

(2) *Labeling changes requiring the submission and approval of a supplement prior to distribution of the drug made using the change (major changes).* (i) Addition of intended uses and changes to package labeling require a supplement. These changes include, but are not limited to:

(A) Revision in labeling, such as updating information pertaining to effects, dosages, adverse reactions, contraindications, which includes information headed ''adverse reactions,'' ''warnings,'' ''precautions,'' and ''contraindications,'' except ones described in (c)(3) of this section;

(B) Addition of an intended use;

(C) If it is a prescription drug, any mailing or promotional piece used after the drug is placed on the market is labeling requiring a supplemental application, unless:

(*1*) The parts of the labeling furnishing directions, warnings, and information for use of the drug are the same in language and emphasis as labeling approved or permitted; and

(*2*) Any other parts of the labeling are consistent with and not contrary to such approved or permitted labeling.

(*3*) Prescription drug labeling not requiring an approved supplemental application is submitted in accordance with § 514.80(b)(5)(ii).

(D) Any other changes in labeling, except ones described in paragraph (c)(3) of this section.

(ii) The applicant must obtain approval of the supplement from FDA prior to distribution of the drug. The supplement must contain the following:

(A) A completed Form FDA 356V;

(B) A detailed description of the proposed change;

(C) The drug(s) involved;

(D) The data derived from studies in support of the change; and

(E) Any other information as directed by FDA.

(3) *Labeling changes to be placed into effect prior to receipt of a written notice of approval of a supplemental application.* (i) Labeling changes of the following kinds that increase the assurance of drug safety proposed in supplemental applications must be placed into effect immediately:

(A) The addition to package labeling, promotional labeling, or prescription drug advertising of additional warning, contraindication, adverse reaction, and precaution information;

(B) The deletion from package labeling, promotional labeling, or drug advertising of false, misleading, or unsupported intended uses or claims for effectiveness; and

(C) Any other changes as directed by FDA.

(ii) Labeling changes (for example, design and style) that do not decrease safety of drug use proposed in supplemental applications may be placed into effect prior to written notice of approval from FDA of a supplemental application.

(iii) A supplement submitted under paragraph (c)(3) of this section must include the following information:

(A) A full explanation of the basis for the changes, the date on which such changes are being effected, and plainly marked on the mailing cover and on the supplement, ''Supplement—Labeling Changes Being Effected'';

(B) Two sets of printed copies of any revised labeling to be placed in use, identified with the new animal drug application number; and

(C) A statement by the applicant that all promotional labeling and all drug advertising will promptly be revised consistent with the changes made in the labeling on or within the new animal drug package no later than upon approval of the supplemental application.

(iv) If the supplemental application is not approved and the drug is being distributed with the proposed labeling, FDA may initiate an enforcement action because the drug is misbranded under section 502 of the act and/or adulterated under section 501 of the act. In addition, under section 512(e) of the act, FDA may, after due notice and opportunity for a hearing, issue an order withdrawing approval of the application.

(4) *Changes providing for additional distributors to be reported under Records and reports concerning experience with approved new animal drugs (§ 514.80).* Supplemental applications as described under paragraph (c)(2) of this section will not be required for an additional distributor to distribute a drug that is the subject of an approved new animal drug application or abbreviated new animal drug application if the conditions described under § 514.80(b)(5)(iii) are met.

(d) *Patent information.* The applicant must comply with the patent information requirements under section 512(c)(3) of the act.

(e) *Claimed exclusivity.* If an applicant claims exclusivity under section 512(c)(2)(F) of the act upon approval of a supplemental application for a change in its previously approved drug, the applicant must include such a statement.

(f) *Good laboratory practice for nonclinical laboratory studies.* A supplemental application that contains nonclinical laboratory studies must include, with respect to each nonclinical study, either a statement that the study was conducted in compliance with the requirements set forth in part 58 of this chapter, or, if the study was not conducted in compliance with such regulations, a brief statement of the reason for the noncompliance.

■ 7. Section 514.106 is amended by removing paragraphs (b)(1)(xiv), and revising paragraphs (b)(1)(vi) and (b)(1)(xiii) to read as follows:

§ 514.106 Approval of supplemental applications.

* * * * *

(b) * * *

(1) * * *

(vi) A change in promotional material for a prescription new animal drug not exempted by § 514.8(c)(2)(i)(C)(*1*) through (c)(2)(i)(C)(*3*).

* * * * *

(xiii) A change permitted in advance of approval as described under § 514.8(b)(3).

* * * * *

PART 558—NEW ANIMAL DRUGS FOR USE IN ANIMAL FEEDS

■ 8. The authority citation for 21 CFR part 558 continues to read as follows:

Authority: 21 U.S.C. 360b, 371.

§ 558.5 [Amended]

■ 9. Section 558.5 is amended in paragraph (j) by removing ''514.8(d) and (e)'' and by adding in its place ''514.8(c)(3)''.

Dated: September 1, 2006.

Jeffrey Shuren,

Assistant Commissioner for Policy.

[FR Doc. E6–21133 Filed 12–12–06; 8:45 am]

BILLING CODE 4160–01–S

DEPARTMENT OF HEALTH AND HUMAN SERVICES

Food and Drug Administration

21 CFR Part 101

[Docket No. 1998P–0043] (formerly Docket No. 98P–0043)

Food Labeling: Nutrition Labeling of Dietary Supplements on a ''Per Day'' Basis

AGENCY: Food and Drug Administration, HHS.

ACTION: Final rule.

SUMMARY: The Food and Drug Administration (FDA) is amending its nutrition labeling regulations for dietary supplements to provide that the quantitative amount and the percent of Daily Value of a dietary ingredient may be voluntarily presented on a ''per day'' basis in addition to the required ''per serving'' basis when a recommendation is made on the label that the dietary supplement be consumed more than once per day. This final rule responds to a citizen petition requesting that FDA amend our dietary supplement nutrition labeling regulations to include this provision. FDA is taking this action to give manufacturers of dietary supplements the option to present nutrition information on a ''per day'' basis to consumers.

DATES: The regulation is effective December 13, 2006.

FOR FURTHER INFORMATION CONTACT: Carole L. Adler, Center for Food Safety and Applied Nutrition (HFS–820), Food and Drug Administration, 5100 Paint Branch Pkwy., College Park, MD 20740–3835, 301–436–2371.

SUPPLEMENTARY INFORMATION:

I. Background

In the **Federal Register** of January 12, 1999 (64 FR 1765), FDA published a proposed rule entitled ''Food Labeling: Nutrition Labeling of Dietary Supplements on a 'Per Day' Basis'' (the proposed rule). The proposed rule was published in response to a citizen petition submitted by the Nutrilite Division of the Amway Corporation (the petitioner) (filed January 23, 1998, Docket No. 98P–0043/CP1). In the citizen petition, the petitioner requested that we amend our nutrition labeling regulations for dietary supplements to permit the option of listing the quantitative amount and percent of Daily Value of dietary ingredients on a ''per day'' basis in addition to the required ''per serving'' basis when the label of the product recommends or instructs that the dietary supplement be consumed more than once per day. The proposed rule described the petitioner's request for ''per day'' labeling, including the petitioner's proposed language for amending § 101.36 (21 CFR 101.36) (64 FR 1765 at 1766 through 1767).

In the proposed rule, FDA explained the relevant background and history of § 101.36, which governs the nutrition labeling of dietary supplements (64 FR 1765 at 1766). Among other statutory provisions, § 101.36 implements section 403(q)(5)(F)(ii) of the Federal Food, Drug, and Cosmetic Act (the act) (21 U.S.C. 343(q)(5)(F)(ii)), which was added by the Dietary Supplement Health and Education Act of 1994 (DSHEA). Section 403(q)(5)(F)(ii) states that the listing of dietary ingredients in dietary supplement nutrition labeling must include the quantity of each such ingredient (or of a proprietary blend of such ingredients) ''per serving.''

In response to DSHEA, in its December 28, 1995, proposal entitled ''Food Labeling; Statement of Identity, Nutrition Labeling and Ingredient Labeling of Dietary Supplements'' (the December 28, 1995, proposed rule), FDA proposed that quantitative nutrition information for a dietary supplement be listed on a ''per serving'' basis (60 FR 67194 at 67198 and 67201). This requirement remained unchanged in the September 23, 1997, final rule (62 FR 49826 at 49830) entitled ''Food Labeling; Statement of Identity, Nutrition Labeling and Ingredient Labeling of Dietary Supplements; Compliance Policy Guide Revocation'' (the September 23, 1997, final rule). The September 23, 1997, final rule established requirements for the nutrition labeling and ingredient labeling of dietary supplements. These regulations state, in relevant part, that, for ''(b)(2)-dietary ingredients'' (i.e., dietary ingredients that have a Reference Daily Intake (RDI) or a Daily Reference Value (DRV) as established in § 101.9(c) (21 CFR 101.9(c))) and their subcomponents (see § 101.36(b)(2)), the declaration of nutrition information on the label and in the labeling of dietary supplements must include the quantitative amount and percent of Daily Value of each dietary ingredient ''per serving'' (§ 101.36(b)(2)(ii) through (b)(2)(iii)). For ''other dietary ingredients'' (i.e., dietary ingredients for which RDIs and DRVs have not been established (see § 101.36(b)(3)), FDA's regulations require a declaration of the quantitative amount of each dietary ingredient ''per serving'' and a symbol (e.g., an asterisk) in the column under the heading ''% Daily Value,'' or following the quantitative amount when such a heading is not used, that refers to the same symbol placed at the bottom of the Supplement Facts label and followed by the statement ''Daily Value not established'' (§ 101.36(b)(3)(ii) and (b)(3)(iv)).

At the manufacturer's option, nutrition labeling for a dietary supplement (i.e., the Supplement Facts label) may also include the quantitative amount and percent of Daily Value of each dietary ingredient on a ''per unit'' basis in addition to the required ''per serving'' basis (§ 101.36(b)(2)(iv)). The petitioner requested that § 101.36 be amended to include a provision that the quantitative amount and percent of Daily Value of a dietary ingredient may also be listed on a ''per day'' basis in addition to the required ''per serving'' basis when a recommendation is made on the label that the dietary supplement be consumed more than once per day.

In response to the petitioner's request, we proposed to amend § 101.36 by adding new paragraph (e)(9) to permit quantitative information by weight (or volume, if permitted) to be declared on a ''per day'' basis in addition to the required ''per serving'' basis. Accordingly, we proposed to remove § 101.36(b)(2)(iv), which provides for the optional listing of quantitative information on a ''per unit'' basis, and to include this provision with the new provision for the optional listing of quantitative information on a ''per day'' basis in new § 101.36(e)(9). These labeling provisions would apply to all dietary ingredients (i.e., paragraph (b)(2) and other dietary ingredients). We further proposed to redesignate existing paragraphs (e)(9), (e)(10), and (e)(11) of § 101.36 as (e)(10), (e)(11), and (e)(12), respectively, and, accordingly, in redesignated paragraph (e)(12), to change the reference to paragraph (e)(10) to (e)(11). Finally, we proposed to provide an example in new § 101.36(e)(11)(viii) of a suggested format for a Supplement Facts label providing information on a ''per serving'' and ''per day'' basis. Interested persons were given until March 29, 1999, to comment on the proposed rule.

II. Summary of Comments and the Agency's Responses

FDA received six letters, each containing one or more comments, in response to the proposed rule. Comments were received from industry (including the petitioner), trade associations, and a consumer advocacy group. All comments supported the proposed rule with two comments requesting additional changes. The latter comments and the agency's responses are discussed in the following paragraphs. Two other comments raised issues regarding the ''Analysis of Impacts'' of the proposed regulation; they are discussed in the ''Analysis of Impacts'' section of this document.

- Two comments responding to the proposed rule's inclusion of a sample Supplement Facts label for ''per serving'' and ''per day'' information recommended additional options for the required format. One comment requested that manufacturers have the option of providing a statement such as ''Recommended Servings Per Day 3 Caplets (multiply per caplet amounts by 3 for per day amount)'' below the ''Serving Size'' declaration. The comment requested that we permit firms to provide the ''per day'' information either in this format or in the proposed rule's column format. The comment stated that the requested optional format gives consumers instructions for calculating the total amount of a dietary supplement and its dietary ingredients consumed per day and that most consumers are able to do this simple calculation. Also, the comment noted that the requested optional format would enable companies to optimize the type size on dietary supplement labels to improve label readability. The comment explained that using a column format to provide ''per day'' information would increase the Supplement Facts label by about 30 percent and that such an increase may drive the choice of type

size to the minimum allowed, rather than larger type. The comment contended that use of the minimum type size to offset the additional space consumed by a larger Supplement Facts label is not necessarily in the public interest.

The other comment requested that we allow a statement such as ''Recommended: Three (3) servings per day'' immediately following the ''Serving Size'' declaration in the Supplement Facts panel when nutrition information is presented on a ''per day'' basis. The comment's sample label provided this statement in conjunction with the column format. The comment stated that the recommendation of a day's consumption in the Supplement Facts label is not confusing and allows for easy readability by the consumer so that the consumer understands the concept of total daily consumption in one place on the label.

We have considered the comments requesting that the agency allow these additional optional statements about servings ''per day'' recommended elsewhere on the label in the Supplement Facts label of a dietary supplement. We believe that permitting a parenthetical statement as part of the ''Serving Size'' declaration in lieu of an additional column would promote larger print and would improve the readability of the Supplement Facts label in some circumstances. We also agree with the comment that permitting manufacturers to include a parenthetical declaration of the servings per day recommended elsewhere on the label after the listed serving size on the Supplement Facts panel would be useful, and would not be confusing, to consumers. Accordingly, we are permitting both types of parenthetical statements with slight modifications.

We disagree with some of the language proposed by both comments. Both comments proposed language for the optional parenthetical statements, and both proposals included the word ''recommended.'' We are not providing for use of the word ''recommended'' in new § 101.36(e)(9) because we believe that the word may cause confusion among consumers if used in the context of the Supplement Facts label. The purpose of the Supplement Facts label is to set out the factual nutritional information for the serving size of the product. To assure that the relevant nutritional information is set out, section 403(q)(5)(F) of the act prescribes information that must be included on the label of the dietary supplement. FDA's nutrition labeling regulations for dietary supplements prescribe both the information in a Supplement Facts label and its presentation, including the format (§ 101.36(b)), the percent of Daily Value of certain dietary ingredients (§§ 101.9(c) and 101.36(b)(2)), the order in which certain dietary ingredients are presented (§ 101.36(b)(2)(i)(B)), the manner in which amounts are to be expressed (§ 101.36(b)(2)(ii)), and the manner in which dietary ingredients are to be listed, even if no RDI or DRV has been established (§ 101.36(d)). Introducing the term ''recommended'' into the Supplement Facts label could suggest to consumers that the recommendation for the number of servings per day comes from some independent source, such as an expert body. FDA believes that permitting the same information to be conveyed without use of the word ''recommended'' would achieve the same result sought by the comments without leading to the potential confusion stemming from use of the word ''recommended'' in the context of the Supplement Facts label. Moreover, manufacturers and distributors remain free to use the term ''recommended'' elsewhere on the label of their dietary supplements, so long as use of the term is not false or misleading (e.g, if it suggests that the recommendation comes from a source other than the manufacturer or distributor when, in fact, it does not) or does not otherwise misbrand the dietary supplement under section 403 of the act.

New § 101.36(e)(9) will now permit a parenthetical statement in the Supplement Facts label that provides directions for calculating the ''per day'' amount when there is a manufacturer's (or distributor's, if the distributor labels the product) recommendation or directions for use in other parts of the label that the dietary supplement be consumed more than once per day. A manufacturer may use such a parenthetical statement as an alternative to the column format for ''per day'' information described in the proposed rule and permitted in new § 101.36(e)(9). For example, a manufacturer could provide a statement such as ''Serving Size: 1 Caplet (Multiply amounts by 3 for total daily amount).'' We are also incorporating a provision for a parenthetical declaration of the servings per day recommended elsewhere on the label into new § 101.36(e)(9). The regulation will now permit such a simple statement following the ''Serving Size'' declaration. FDA believes that a simple declaration of the servings per day recommended on other parts of the label, such as ''Total daily amount: 3 caplets per day,'' on the Supplement Facts label would provide clarity for the consumer when interpreting the column format, which provides the same information in a different way (e.g., ''Per Day (3 Caplets)'').

- One comment asked if continuous bars and lines would be acceptable in place of the non-continuous bars and lines shown in the sample Supplement Facts label in the proposed rule.[1] Specifically, concerning the sample Supplement Facts label, this comment was referring to (1) the non-continuous heavy bar below the ''Serving Size'' declaration, (2) the non-continuous light bar below the ''Per Serving'' (''Per Caplet'' in the proposed sample label) and ''Per Day'' headings, (3) the non-continuous hairlines between the listed dietary ingredients, and (4) the non-continuous heavy bar below the listing of the (b)(2)-dietary ingredients.[2]

The non-continuous lines and bars provided in the proposed sample Supplement Facts label are a means of helping consumers distinguish each column. However, the agency would like to clarify that the sample labels presented in § 101.36(e)(10) (now § 101.36(e)(11)) are included for the purpose of illustration. The non-continuous lines and bars used in the sample Supplement Facts labels are one acceptable way to comply with the regulations, but not the only way. As long as the presentation otherwise complies with § 101.36, deviations from the sample Supplement Facts labels in new § 101.36(e)(11) would not violate the regulation. We believe that a Supplement Facts label using continuous bars and lines to separate multiple pairs of quantitative amounts and percents of Daily Value for dietary ingredients would be acceptable when the information is clearly identified by appropriate column headings.

To clarify the proposed provisions for ''per day'' and ''per unit'' information, and to make the codified language read more clearly and to conform to plain language principles, we are making a number of additional changes to the proposed codified language of new § 101.36(e)(9), both in response to

[1] This comment referred to proposed paragraph § 101.36(e)(9)(vii) for the sample label. However, because there was no § 101.36(e)(9)(vii) in the proposed rule, we presume that the comment intended to refer to the sample label in paragraph § 101.36(e)(11)(viii) of the proposed rule.

[2] This comment referred to the non-continuous nature of the heavy bar below the listing of § 101.36(b)(3) dietary ingredients (i.e., ''other dietary ingredients'') in the proposed sample label. However, because the sample label in the proposed rule did not include other dietary ingredients, we presume that the comment intended to inquire about the non-continuous heavy bar below the listing of (b)(2)-dietary ingredients.

comments, and after our own review of the proposal. We are providing the codified language in two paragraphs: § 101.36(e)(9)(i) and § 101.36(e)(9)(ii). The first two sentences, which pertain to ''per unit'' information are included in § 101.36(e)(9)(i). The remainder of the codified section, which pertains to ''per day'' information is included in § 101.36(e)(9)(ii). In the first sentence of the codified section, after ''Daily Value,'' we are adding ''of each dietary ingredient'' and replacing the last clause of this sentence (i.e., ''as required in paragraph (b)(2)(ii) and (b)(2)(iii) of this section'') with the following: ''required by paragraphs (b)(2)(ii) and (b)(2)(iii) of this section for (b)(2)-dietary ingredients and (b)(3)(ii) and (b)(3)(iv) of this section for other dietary ingredients.'' After the first sentence, we are adding the following (second) sentence: ''If 'per unit' information is provided, it must be presented in additional columns to the right of the 'per serving' information and be clearly identified by appropriate headings.'' The second sentence in the proposed codified language is now the third sentence in this final rule (the first sentence of § 101.36(e)(9)(ii)), and incorporates changes as follows: (1) We are adding ''by weight (or volume, if permitted)'' following the words ''total quantitative amount'' and (2) following ''Daily Value,'' we are adding ''of each dietary ingredient may be presented on a 'per day' basis in addition to the 'per serving' basis required by paragraphs (b)(2)(ii) and (b)(2)(iii) of this section for (b)(2)-dietary ingredients and (b)(3)(ii) and (b)(3)(iv) of this section for other dietary ingredients,'' to be consistent with the first sentence for ''per unit'' information and to avoid potential confusion.

In addition, to clarify the proposed provisions for ''per day'' information, we are adding the following sentences to § 101.36(e)(9)(ii)):

If ''per day'' information is provided, it must be presented in additional columns to the right of the ''per serving'' information and be clearly identified by appropriate headings and/or be presented in a parenthetical statement as part of the ''Serving Size'' declaration. A sample illustration for ''per day'' information in a column format is provided in paragraph (e)(11)(viii) of this section. As illustrated, the additional ''Per Day'' column heading is followed parenthetically by the number of servings recommended per day in other parts of the label (e.g., ''Per Day (3 Caplets)''). When the parenthetical statement format following the ''Serving Size'' declaration is used as an alternative to the column format, the statement must provide no more than simple instructions regarding how to calculate the ''per day'' amount for the number of servings per day recommended in other parts of the label (e.g., ''Serving Size: 1 Caplet (Multiply amounts by 3 for total daily amount)''). When the parenthetical statement format following the ''Serving Size'' declaration is used in addition to the column format, the statement must provide no more than a simple declaration of the number of servings recommended in other parts of the label (e.g., ''Serving Size: 1 Caplet (Total daily amount: 3 caplets per day)'').

We are also changing the word ''shall'' to ''must'' in the second sentence of new § 101.36(e)(12). This change is meant to make the codified language read more clearly and conform to plain language principles.

In sum, we are finalizing the proposed rule as follows: We are removing § 101.36(b)(2)(iv), which provides for the optional listing of quantitative information on a ''per unit'' basis, and including this provision in a new § 101.36(e)(9). We are, therefore, continuing to provide for the optional presentation of the quantitative amount by weight (or volume, if permitted) and the percent of Daily Value on a ''per unit'' basis, in addition to the required ''per serving'' basis. We are also adding a new provision in the new § 101.36(e)(9) to provide for the optional presentation of the quantitative amount by weight (or volume, if permitted) and the percent of Daily Value on a ''per day'' basis, in addition to the required ''per serving'' basis, when the label recommends consumption of the dietary supplement more than once per day.

As proposed, we are also redesignating existing paragraphs (e)(9), (e)(10), and (e)(11) of § 101.36 as (e)(10), (e)(11), and (e)(12), respectively, and accordingly, in redesignated paragraph (e)(12) changing the reference to paragraph (e)(10) to the newly redesignated paragraph (e)(11). Lastly, in new § 101.36(e)(11)(viii), we are providing a sample label for the purpose of illustrating a column format for a Supplement Facts label providing information on a ''per serving'' and ''per day'' basis.

III. Legal Authority

In response to a citizen petition, FDA is amending its food labeling regulations for dietary supplements to provide that the quantitative amount and percent of Daily Value of a dietary ingredient may be voluntarily presented on a ''per day'' basis in addition to the required ''per serving'' basis when a recommendation is made on the label that the dietary supplement be consumed more than once per day. FDA has authority to take this action under sections 201(n), 403(a)(1) and (q)(5)(F), and 701(a) of the act (21 U.S.C. 321(n), 343(a)(1) and (q)(5)(F), 371(a)).

By delegation from the Secretary of Health and Human Services (the Secretary), FDA has authority under section 701(a) of the act to issue regulations for the efficient enforcement of the act. Further, section 403(q)(5)(F) provides that a dietary supplement product must comply with the requirements of sections 403(q)(1) and (q)(2) in a manner which is appropriate for the product and which is specified in regulations of the Secretary (and by delegation, FDA). Sections 403(q)(1) and (q)(2) require that if a food, which includes a dietary supplement, is intended for human consumption and is offered for sale, its label or labeling must bear certain nutrition information. For dietary supplements, this includes nutrition information ''per serving'' about dietary ingredients that are present in significant amounts (21 U.S.C. 343(q)(5)(F)(i)). Under these two sections, FDA has authority to permit the voluntary presentation of ''per day'' nutrition information on a dietary supplement label and provide requirements for such labeling.

This final rule will give dietary supplement manufacturers the option to present nutrition information of dietary supplements on a ''per day'' basis to consumers. When manufacturers choose to include ''per day'' information on a dietary supplement label, in addition to the required ''per serving'' information, consumers will have more information about the daily intake of dietary ingredients from a dietary supplement that is recommended by the manufacturer to be consumed more than once per day. When provided, ''per day'' information about a dietary supplement can assist consumers in making dietary choices about total consumption of dietary ingredients.

IV. Analysis of Impacts

A. Benefit-Cost Analysis

FDA has examined the impacts of this final rule under Executive Order 12866, the Regulatory Flexibility Act (5 U.S.C. 601–612), and the Unfunded Mandates Reform Act of 1995 (Public Law 104–4). Executive Order 12866 directs agencies to assess all costs and benefits of available regulatory alternatives and, when regulation is necessary, to select regulatory approaches that maximize net benefits (including potential economic, environmental, public health and safety, and other advantages; distributive impacts; and equity). The agency believes that this final rule is not a significant regulatory action as defined by the Executive order.

1. The Need for This Regulation

Current regulations do not permit the voluntary declaration of potentially

useful information on the labels of dietary supplements. Consumers may want information on the amount of nutrition provided by dietary supplements on a ''per day'' basis. Without this rule, manufacturers are precluded from providing consumers with that information in the Supplement Facts label of their dietary supplements.

2. Options

There are primarily four regulatory options available to us.

a. *Option 1.—Take no new regulatory action.* This option would result in no change to the current situation. This option is the baseline for comparison of options and entails no costs or benefits.

b. *Option 2.—Take the regulatory actions as described in the proposed rule.* We proposed allowing the nutrition labeling of dietary supplements to declare the quantitative amount and the percent of Daily Value of a dietary ingredient on a ''per day'' basis in addition to the required ''per serving'' basis when the label recommends that the dietary supplement be consumed more than once per day as long as the information was provided in a column format.

The proposed rule would have caused costs and benefits only to the extent that firms elected to take advantage of the option of presenting information on a ''per day'' basis. No firm would have borne the cost of changing labels unless it believed that the claim would have resulted in increased profits by virtue of increased sales of its products or an increased willingness by consumers to pay more for the product. Interested consumers would have benefited from the additional ''per day'' information.

In response to the proposal, we received one comment that agreed with our analysis and stated that ''[t]he agency accurately notes that the cost impact of this change is inconsequential.'' However, the comment went on to say that, ''FDA should seek ways to balance the potentially conflicting public health needs of the presentation of all of the needed and required information and the limited label space of dietary supplement product labels. * * * The use of a column format would increase the Supplement Facts box by about 30%, thereby potentially driving the choice of type size to the minimum required to offset the additional space consumed by a larger Supplement Facts box. This is not necessarily in the public interest.''

We still believe that finalizing the proposed rule would have been of greater benefit to producers and consumers than continuing to preclude the provision of this information in the Supplement Facts label. However, that benefit would have been mitigated by the potential cost to consumers of having to read the Supplement Facts label in a smaller type size.

c. *Option 3.—Take the regulatory actions described in this final rule.* In this final rule, we are allowing the nutrition labeling of dietary supplements to declare the quantitative amount and the percent of Daily Value of a dietary ingredient on a ''per day'' basis in addition to the required ''per serving'' basis when the label recommends that the dietary supplement be consumed more than once per day. Based on comments (described in section II of this document) we are also permitting this information to be provided in parenthetical notations as an alternative to the column format described in the proposed rule, as detailed in section II of this document. These regulatory actions provide producers of dietary supplements the option to present nutrition information on a ''per day'' basis in the Supplement Facts label with greater flexibility than in the proposed rule.

As under Option 2, the final rule will cause costs and benefits only to the extent that firms elect to take advantage of the option of presenting information on a ''per day'' basis. No firm will bear the cost of changing labels unless it believes that the claim will result in increased profits by virtue of increased sales of its products or an increased willingness by consumers to pay more for the product.

However, this final rule is an improvement over the proposed rule. It gives producers of dietary supplements greater flexibility in how they provide consumers with the ''per day'' information. This potentially decreases the costs to them (in comparison to Option 2) by not requiring the information to be provided in a column format and thereby reducing the potential need for extensive label redesigns.

The increased flexibility and decreased cost to producers of providing the information increases the likelihood (compared to Option 2) that producers will voluntarily provide consumers with ''per day'' information. It also reduces the likelihood (compared to Option 2) that the new ''per day'' information and all of the other information in the Supplement Facts label would be provided in smaller and less legible type.

Therefore, we conclude that this final rule will improve social welfare compared with Options 1 and 2.

d. *Option 4.—Require ''per day'' labeling of dietary supplements.* In response to the proposed rule, one comment stated that we should monitor the costs for manufacturers who use the voluntary ''per day'' labeling and, if the costs are minimal, ''consider making per day labeling mandatory in some future regulation.'' The comment stated the belief ''that the informational benefits of the rule for consumers, both at the time of purchase and of consumption, may be significant enough to warrant a mandatory rule.''

We are not precluding that action in the future. There are at least 62,500 dietary supplement labels for products sold in the United States. Requiring that all labels be changed could impose significant costs on the industry. For example, if we were to require ''per day'' labeling within 2 years of the publication of this final rule, it could cost between as little as $40 million and as much as $100 million, based on data in our labeling cost model. Such significant costs would warrant evidence of at least similarly sized benefits to consumers from information on ''per day'' nutritional information. We currently do not have enough information on the benefit to consumers of ''per day'' labeling to justify mandatory ''per day'' labeling for all dietary supplements. Therefore, we have no evidence that this option is superior for social welfare than this final rule (Option 3).

B. Small Entity Analysis

The Regulatory Flexibility Act (5 U.S.C. 601–612) requires agencies to analyze regulatory options that would minimize any significant impact of a rule on small entities. Because this final rule allows voluntary ''per day'' labeling of dietary supplements, the agency certifies that this final rule will not have a significant economic impact on a substantial number of small entities. Because ''per day'' labeling will be permitted and not required, a firm, including any small firm, would change its labeling and incur costs only if the expected benefits to it (e.g., increased sales) exceed the expected costs. Therefore, under the Regulatory Flexibility Act, no further analysis is required.

C. Unfunded Mandates

Section 202(a) of the Unfunded Mandates Reform Act of 1995 requires that agencies prepare a written statement, which includes an assessment of anticipated costs and

benefits, before proposing ''any rule that includes any Federal mandate that may result in the expenditure by State, local, and tribal governments, in the aggregate, or by the private sector, of $100,000,000 or more (adjusted annually for inflation) in any one year.'' The current threshold after adjustment for inflation is $122 million, using the most current (2005) Implicit Price Deflator for the Gross Domestic Product. FDA does not expect this final rule to result in any 1-year expenditure that would meet or exceed this amount.

V. Federalism Analysis

We have analyzed this rule in accordance with the principles set forth in Executive Order 13132. FDA has determined that the rule has a preemptive effect on State law. Section 4(a) of the Executive order requires agencies to ''construe * * * a Federal Statute to preempt State law only where the statute contains an express preemption provision, or there is some other clear evidence that Congress intended preemption of State law, or where the exercise of State authority conflicts with the exercise of Federal authority under the Federal statute.'' Section 403A of the act (21 U.S.C. 343–1) is an express preemption provision. Section 403A(a)(4) of the act provides that: ''* * * no State or political subdivision of a State may directly or indirectly establish under any authority or continue in effect as to any food in interstate commerce—* * * (4) any requirement for nutrition labeling of food that is not identical to the requirement of section 403(q) * * *.''

Before the effective date of this rule, this provision operated to preempt States from permitting ''per day'' nutrition labeling on dietary supplements because no such requirements had been authorized by FDA under section 403(q) of the act. Once this rule becomes effective, States will be preempted from imposing any requirements about ''per day'' nutrition labeling for dietary supplements that are not identical to those permitted by this rule. This preemptive effect is consistent with what Congress set forth in section 403A of the act. Section 403A(a)(4) of the act displaces both State and legislative requirements and State common law duties (*Medtronic* v. *Lohr*, 518 U.S. 470, 503 (1996) (Breyer, J., concurring in part and concurring in the judgment); id. at 510 (O'Connor, J., joined by Rehnquist, C.J., Scalia, J., and Thomas, J., concurring in part and dissenting in part); *Cippollone* v. *Liggett Group, Inc.*, 505 U.S. 504, 521 (1992) (plurality op.); id. at 548–49 (Scalia, J., joined by Thomas, J., concurring in part in the judgment and dissenting in part)).

FDA believes that the preemptive effect of the final rule is consistent with Executive Order 13132. Section 4(e) of the Executive order provides that, ''when an agency proposes to act through adjudication or rulemaking to preempt State law, the agency shall provide all affected State and local officials notice and an opportunity for appropriate participation in the proceedings.'' FDA provided the States with an opportunity for appropriate participation in this rulemaking when it sought input from all stakeholders through publication of the proposed rule in the **Federal Register** on January 12, 1999 (64 FR 1765). FDA received no comments from any States on the proposed rulemaking.

In conclusion, FDA believes that it has complied with all of the applicable requirements of Executive Order 13132, and has determined that the preemptive effects of this final rule are consistent with the Executive order.

VI. The Paperwork Reduction Act of 1995

This final rule contains information collection provisions that are subject to review by the Office of Management and Budget (OMB) under the Paperwork Reduction Act of 1995 (44 U.S.C. 3501–3520). A description of these provisions with an estimate of the annual reporting burden is given in the following paragraphs. Included in the estimate is the time for reviewing instructions, searching existing data sources, gathering and maintaining the data needed, and completing and reviewing each collection of information.

Title: Food Labeling: Nutrition Labeling of Dietary Supplements on a ''Per Day'' Basis.

Description: Section 403(q)(5)(F) of the act provides that dietary supplements must bear nutrition labeling in a manner that is appropriate for the product and that is specified in regulations issued by FDA. We issued regulations establishing the requirements for nutrition labeling of dietary supplements in § 101.36 in the September 23, 1997, final rule. We are now amending our nutrition labeling regulations for dietary supplements to permit voluntary declaration of the quantitative amount and the percent of Daily Value of a dietary ingredient on a ''per day'' basis in addition to the required ''per serving'' basis, if a dietary supplement label recommends that the dietary supplement be consumed more than once per day. These provisions respond to a citizen petition submitted by a manufacturer and marketer of dietary supplements. This rule will provide the option to present nutrition information on a ''per day'' basis to consumers.

Description of Respondents: Suppliers of dietary supplements.

TABLE 1.—ESTIMATED ANNUAL REPORTING BURDEN[1]

21 CFR Section	No. of Respondents	No. of Responses per Respondent	Total Annual Responses	Hours per Response	Total Annual Hours	Total Operating Cost
101.36(e)	125	13	1,625	0.25	406	$151,000

[1] There are no capital or maintenance costs associated with this collection.

The agency estimated in the March 13, 2003, proposed rule entitled ''Current Good Manufacturing Practice in Manufacturing, Packing, or Holding Dietary Ingredients and Dietary Supplements'' that there were about 1,250 manufacturers and relabelers of dietary supplements (68 FR 12157 at 12223). Based on data in our labeling cost model each producer has, on average, roughly 50 products. We assume that only 10 percent, or 125, of the dietary supplement suppliers would revise the labels of their products to incorporate ''per day'' information for their products. We also assume that ''per day'' information would generally be placed on, at most, 25 percent, or, at most, 13 of a firm's estimated 50 products, although this number would vary by firm based on the types of products that it produces. The agency also believes that the burden associated with providing nutrition information on a ''per day'' basis for dietary supplements would be a one-time burden for the small number of firms that decide voluntarily to add this additional information to the labels of their products, separate from any other label changes for their products. We estimate that at least 90 percent of firms would coordinate adding ''per day''

information with other changes to their labels. In this case, the voluntary cost of transmitting ''per day'' information to consumers would be subsumed almost entirely in the cost of these other voluntary or required labeling changes. The incremental cost for these 113 firms would be approximately $50 (64 FR 1765 at 1768) per label for 1,469 labels, or about $73,000 total. For the remaining 12 firms that would not coordinate adding ''per day'' information with other labeling changes, we estimate that the cost would be approximately $500 per label (64 FR 1765 at 1768 through 1769) for 156 labels, or $78,000 total. The estimated total operating costs in table 1 of this document are, therefore, $151,000. Respondents are already required to list the quantitative amount and percent of Daily Value of dietary ingredients ''per serving'' as part of the nutrition information for dietary supplements. The ''per day'' information is generated by simple extrapolation from the ''per serving'' information.

Individuals and organizations may submit comments on these burden estimates or on any other aspect of these information collection provisions, including suggestions for reducing the burden, and should direct them to the Office of Nutritional Products, Labeling, and Dietary Supplements (HFS–800), Center for Food Safety and Applied Nutrition, Food and Drug Administration, 5100 Paint Branch Pkwy., College Park, MD 20740–3835.

The information collection provisions in the proposed rule were approved under OMB control number 0910–0395. This approval was discontinued in November 2004, but is now reinstated and expires on October 31, 2009. An agency may not conduct or sponsor, and a person is not required to respond to, a collection of information unless it displays a currently valid OMB control number.

VII. Environmental Impact

We have carefully considered the potential environmental effects of this action. FDA has determined under 21 CFR 25.30(k) that this action is of a type that does not have a significant effect on the human environment. Therefore, neither an environmental assessment nor an environmental impact statement is required. No new information or comments have been received that would affect this determination.

List of Subjects in 21 CFR Part 101

Food labeling, Nutrition, Reporting and recordkeeping requirements.

■ Therefore, under the Federal Food, Drug, and Cosmetic Act and under authority delegated to the Commissioner of Food and Drugs, 21 CFR part 101 is amended as follows:

PART 101—FOOD LABELING

■ 1. The authority citation for 21 CFR part 101 continues to read as follows:

Authority: 15 U.S.C. 1453, 1454, 1455; 21 U.S.C. 321, 331, 342, 343, 348, 371; 42 U.S.C. 243, 264, 271.

■ 2. Section 101.36 is amended by removing paragraph (b)(2)(iv); by redesignating paragraphs (e)(9), (e)(10), and (e)(11) as paragraphs (e)(10), (e)(11), and (e)(12), respectively; by adding new paragraphs (e)(9)(i) and (e)(9)(ii); by adding new paragraph (e)(11)(viii) to newly redesignated paragraph (e)(11); and by revising newly redesignated paragraph (e)(12) to read as follows (The graphic to newly redesignated (e)(12) remains unchanged.):

§ 101.36 Nutrition labeling of dietary supplements.

* * * * *

(e) * * *

(9)(i) The quantitative amount by weight (or volume, if permitted) and the percent of Daily Value of each dietary ingredient may be presented on a ''per unit'' basis in addition to the ''per serving'' basis required by paragraphs (b)(2)(ii) and (b)(2)(iii) of this section for (b)(2)-dietary ingredients and (b)(3)(ii) and (b)(3)(iv) of this section for other dietary ingredients. If ''per unit'' information is provided, it must be presented in additional columns to the right of the ''per serving'' information and be clearly identified by appropriate headings.

(ii) Alternatively, if a recommendation is made in other parts of the label that a dietary supplement be consumed more than once per day, the total quantitative amount by weight (or volume, if permitted) and the percent of Daily Value of each dietary ingredient may be presented on a ''per day'' basis in addition to the ''per serving'' basis required by paragraphs (b)(2)(ii) and (b)(2)(iii) of this section for (b)(2)-dietary ingredients and (b)(3)(ii) and (b)(3)(iv) of this section for other dietary ingredients. If ''per day'' information is provided, it must be presented in additional columns to the right of the ''per serving'' information and be clearly identified by appropriate headings and/or be presented in a parenthetical statement as part of the ''Serving Size'' declaration. A sample illustration for ''per day'' information in a column format is provided in paragraph (e)(11)(viii) of this section. As illustrated, the additional ''Per Day'' column heading is followed parenthetically by the number of servings recommended per day in other parts of the label (e.g., ''Per Day (3 Caplets)''). When the parenthetical statement format following the ''Serving Size'' declaration is used as an alternative to the column format, the statement must provide no more than simple instructions regarding how to calculate the ''per day'' amount for the number of servings per day recommended in other parts of the label (e.g., ''Serving Size: 1 Caplet (Multiply amounts by 3 for total daily amount)''). When the parenthetical statement format following the ''Serving Size'' declaration is used in addition to the column format, the statement must provide no more than a simple declaration of the number of servings recommended in other parts of the label (e.g., ''Serving Size: 1 Caplet (Total daily amount: 3 caplets per day)'').

* * * * *

(11) * * *

(viii) Dietary supplement illustrating ''per serving'' and ''per day'' information:

Supplement Facts

Serving Size 1 Caplet

	Per Caplet		Per Day (3 Caplets)	
	Amount	% Daily Value	Amount	% Daily Value
Calcium (as calcium citrate)	500 mg	50%	1500 mg	150%
Vitamin D (as cholecalciferol)	125 IU	31%	375 IU	93%

(12) If space is not adequate to list the required information as shown in the sample labels in paragraph (e)(11) of this section, the list may be split and continued to the right as long as the headings are repeated. The list to the right must be set off by a line that distinguishes it and sets it apart from the dietary ingredients and percent of Daily Value information given to the left. The following sample label illustrates this display:

* * * * *

Dated: November 30, 2006.

Jeffrey Shuren,

Assistant Commissioner for Policy.

[FR Doc. 06–9657 Filed 12–12–06; 8:45 am]

BILLING CODE 4160–01–S

ENVIRONMENTAL PROTECTION AGENCY

40 CFR Parts 51, 96, and 97

[EPA–HQ–OAR–2004–0076; FRL–8254–7]

RIN 2060–AM99

Clean Air Interstate Rule (CAIR) and Federal Implementation Plans for CAIR; Corrections

AGENCY: Environmental Protection Agency (EPA).

ACTION: Final rule; correcting amendments.

SUMMARY: In this rule, EPA is making minor corrections to the Clean Air Interstate Rule (CAIR) and the Federal Implementation Plans (FIPs) for the CAIR to clarify text that may potentially be misleading. This corrections rule does not change any of CAIR or CAIR FIPs rule requirements or substantively change the rules in any way.

DATES: *Effective Date:* These correcting amendments are effective on December 13, 2006.

ADDRESSES: The EPA has established a docket for this action under Docket ID No. EPA–HQ–OAR–2004–0076. Documents related to the CAIR are available in the rulemaking docket under Docket ID No. EPA–HQ–OAR–2003–0053; documents related to the CAIR FIPs are available in the rulemaking docket under Docket ID No. EPA–HQ–OAR–2004–0076. All documents in the dockets are listed on the *http://www.regulations.gov* Web site. Although listed in the indexes, some information is not publicly available, *e.g.*, CBI or other information whose disclosure is restricted by statute. Certain other material, such as copyrighted material, is not placed on the Internet and will be publicly available only in hard copy form. Publicly available docket materials are available either electronically through *www.regulations.gov* or in hard copy at the EPA Docket Center (Air Docket), EPA/DC, EPA West, Room B102, 1301 Constitution Ave., NW., Washington, DC. The Public Reading Room is open from 8:30 a.m. to 4:30 p.m., Monday through Friday, excluding legal holidays. The telephone number for the Public Reading Room is (202) 566–1744.

Note: The EPA Docket Center suffered damage due to flooding during the last week of June 2006. The Docket Center is continuing to operate. However, during the cleanup, there will be temporary changes to Docket Center telephone numbers, addresses, and hours of operation for people who wish to visit the Public Reading Room to view documents. Consult EPA's **Federal Register** notice at 71 FR 38147 (July 5, 2006) or the EPA Web site at *http://www.epa.gov/epahome/dockets.htm* for current information on docket status, locations and telephone numbers.

FOR FURTHER INFORMATION CONTACT: Carla Oldham, U.S. EPA, Office of Air Quality Planning and Standards, Air Quality Policy Division, C539–04, Research Triangle Park, NC 27711; telephone number (919) 541–3347, e-mail address: *oldham.carla@epa.gov.*

SUPPLEMENTARY INFORMATION:

I. Background

On May 12, 2005, EPA published the Clean Air Interstate Rule (CAIR) in a final rule entitled, ''Rule to Reduce Interstate Transport of Fine Particulate Matter and Ozone (Clean Air Interstate Rule); Revisions to Acid Rain Program; Revisions to NO_X SIP Call'' (70 FR 25162). On April 28, 2006, EPA published Federal Implementation Plans for the CAIR as part of a final rule entitled, ''Rulemaking on Section 126 Petition From North Carolina to Reduce Interstate Transport of Fine Particulate Matter and Ozone; Federal Implementation Plans To Reduce Interstate Transport of Fine Particulate Matter and Ozone; Revisions to the Clean Air Interstate Rule; Revisions to the Acid Rain Program'' (71 FR 25328). The CAIR requires States to reduce emissions of nitrogen oxides and sulfur dioxide that contribute significantly to nonattainment and maintenance problems in downwind States with respect to the national ambient air quality standards for fine particulate matter ($PM_{2.5}$) and 8-hour ozone. The CAIR FIPs ensure that the emissions reductions required by the CAIR are achieved on schedule. As the control strategy for the FIPs, EPA adopted the model cap-and-trade programs for power plants that EPA provided in the CAIR as a control option for States, with minor changes to account for Federal, rather than State, implementation. The EPA will withdraw the FIP for any State once that State's own State implementation plan for meeting the CAIR requirements is fully approved. For a detailed description of the CAIR and CAIR FIPs, please see the rulemaking actions which are available on EPA's Web site at *http://www.epa.gov/cair* and in the **Federal Register** at and 70 FR 25162; May 12, 2005 and 71 FR 25328; April 28, 2006.

II. Why Are the Corrections Needed?

The CAIR and CAIR FIP contain minor errors that may prove to be misleading and are in need of clarification. As itemized in the regulatory text below, this corrections rule corrects typographical errors, makes minor word corrections, and corrects or provides more specificity in references to other paragraphs or sections within the regulatory text. It does not make any substantive changes to the CAIR or CAIR FIPs or change any of the rule requirements.

III. What Is the Rulemaking Procedure?

The EPA is issuing this final rule without prior proposal or the opportunity for public comment. Section 553 of the Administrative Procedure Act (APA), 5 U.S.C. 553(b)(B), provides that when an Agency for good cause finds that notice and public procedure are impracticable, unnecessary, or contrary to public interest, the Agency may issue a rule without providing notice and an opportunity to comment. The EPA has determined that there is good cause for making this action final without prior proposal or opportunity to comment because the changes to the CAIR and CAIR FIPS correct minor, nonsubstantive errors, are noncontroversial, and are consistent with the technical basis for the rules. Thus, notice and public procedure are not necessary. The EPA finds this constitutes good cause under 5 U.S.C. 553(b)(B). (See also the final sentence of section 307(d)(1) of the Clean Air Act (CAA), indicating that the good cause provisions of the APA continue to apply to rulemaking under section 307(d) of the CAA.)

Section 553(d)(3) allows an agency, upon a finding of good cause, to make a rule effective immediately. Because this action corrects errors and helps to clarify requirements in the underlying rules, EPA finds good cause to make these corrections effective immediately.

IV. Statutory and Executive Order Reviews

Under Executive Order 12866, Regulatory Planning and Review (58 FR 51735, October 4, 1993), this action is not a ''significant regulatory action'' and, therefore, is not subject to review by the Office of Management and Budget. This action is not a ''major rule'' as defined by 5 U.S.C. 804(2). The corrections do not impose an information collection burden under the provisions of the Paperwork Reduction Act of 1995 (44 U.S.C. 3501 *et seq.*). Because EPA has made a ''good cause'' finding that this action is not subject to notice-and-comment requirements under the APA or any other statute, it is not subject to the regulatory flexibility provisions of the Regulatory Flexibility Act (5 U.S.C. 601 *et seq.*), or to sections 202 and 205 of the Unfunded Mandates Reform Act of 1995 (UMRA) (Pub. L. 104B4). In addition, this action does not significantly or uniquely affect small governments or impose a significant intergovernmental mandate, as described in sections 203 and 204 of the UMRA.

The corrections do not have substantial direct effects on the States, or on the relationship between the national government and the States, or on the distribution of power and responsibilities among the various levels of government, as specified in Executive Order 13132, Federalism (64 FR 43255, August 10, 1999).

This action also does not significantly or uniquely affect the communities of Tribal governments, as specified in Executive Order 13175, Consultation and Coordination with Indian Tribal Governments (65 FR 67249, November 9, 2000). The corrections also are not subject to Executive Order 13045, Protection of Children from Environmental Health and Safety Risks (62 FR 19885, April 23, 1997) because this action is not economically significant.

The corrections are not subject to Executive Order 13211, Actions Concerning Regulations That Significantly Affect Energy Supply, Distribution, or Use (66 FR 28355, May 22, 2001) because this action is not a significant regulatory action under Executive Order 12866.

The corrections do not involve changes to technical standards related to test methods or monitoring methods; thus, the requirements of section 12(d) of the National Technology Transfer and Advancement Act of 1995 (15 U.S.C. 272) do not apply.

The corrections also do not involve special consideration of environmental justice-related issues as required by Executive Order 12898, Federal Actions to Address Environmental Justice in Minority Populations and Low-Income Populations (59 FR 7629, February 16, 1994).

The Congressional Review Act, 5 U.S.C. 801 *et seq.*, as added by the Small Business Regulatory Enforcement Fairness Act of 1996 (SBREFA), generally provides that before a rule may take effect, the agency promulgating the rule must submit a rule report, which includes a copy of the rule, to each House of the Congress and to the Comptroller General of the United States. The EPA will submit a report containing this final action and other required information to the U.S. Senate, the U.S. House of Representatives, and the Comptroller General of the U.S. prior to publication of this action in the **Federal Register**. This action is not a ''major rule'' as defined by 5 U.S.C. 804(2). The final rule will be effective on December 13, 2006.

The EPA's compliance with the above statutes and Executive Orders for the underlying rules are discussed in Section X of the CAIR at 70 FR 25305 and in Section IX of the CAIR FIPs at 71 FR 25365.

List of Subjects

40 CFR Part 51

Environmental protection. Administrative practice and procedure, Air pollution control, Electric utilities, Intergovernmental relations, Nitrogen oxides, Ozone, Particulate matter, Reporting and recordkeeping requirements, Sulfur dioxide.

40 CFR Parts 96 and 97

Environmental protection. Administrative practice and procedure, Air pollution control, Electric utilities, intergovernmental relations, Nitrogen oxides, Reporting and recordkeeping requirements, Sulfur dioxide.

Dated: December 7, 2006.

Stephen L. Johnson,

Administrator.

■ For the reasons set forth in the preamble, parts 51, 96, and 97, of title 40, chapter I of the Code of Federal Regulations are amended as follows:

PART 51—[AMENDED]

■ 1. The authority citation for part 51 continues to read as follows:

Authority: 23 U.S.C. 101; 42 U.S.C. 7401–7671q.

§ 51.123 [Amended]

■ 2. Section 51.123 is amended as follows:

■ a. In paragraph (p)(1)(ii)(C)(2), by revising the words ''in (97.143'' to read ''in § 97.143'';

■ b. In paragraphs (q)(1)(iii)(B) and (q)(3), by revising the words ''paragraph (e)(2)'' to read ''paragraph (q)(2)''; and

■ c. In paragraph (cc) in the definition of ''Useful thermal energy'', by revising in paragraph (2) the words ''heat'' to read ''heating''.

§ 51.124 [Amended]

■ 3. Section 51.124 is amended, in paragraph (q) in the definition of ''Useful thermal energy'', by revising in

paragraph (2) the words ''heat'' to read ''heating''.

PART 96—[Amended]

■ 4. The authority citation for part 96 continues to read as follows:

Authority: 42 U.S.C. 7401, 7403, 7410, 7601, and 7651, *et seq.*

§ 96.102 [Amended]

■ 5. Section 96.102 is amended as follows:
■ a. In the definition of ''CAIR NO_X Annual Trading Program'', by revising the words ''§ 51.123'' to read ''§ 51.123(o)(1) or (2)'';
■ b. In the definition of ''CAIR NO_X Ozone Season Trading Program'', by revising the words ''§ 51.123'' to read ''§ 51.123(aa)(1) or (2) (and (bb)(1)), (bb)(2), or (dd)''; and
■ c. In the definition of ''CAIR SO_2 Trading Program'', by revising the words ''§ 51.124'' to read ''§ 51.124(o)(1) or (2)''.

§ 96.105 [Amended]

■ 6. Section 96.105 is amended, in paragraph (a)(1), by revising the words ''(subparts BB and EE'' to read ''subparts BB and EE''.

§ 96.115 [Amended]

■ 7. Section 96.115 is amended, in paragraph (c) introductory text, by revising the words ''Administrator that'' to read ''Administrator, that''.
■ 8. The heading for § 96.120 is amended to read as follows:

§ 96.120 General CAIR NO_X Annual Trading Program permit requirements.

* * * * *

§ 96.143 [Amended]

■ 9. Section 96.143 is amended, in paragraph (c) introductory text and paragraph (c)(2) introductory text, by revising the words ''CAIR NO_X emissions'' to read ''the CAIR NO_X emissions''.

§ 96.151 [Amended]

■ 10. Section 96.151 is amended, in paragraph (b)(2) introductory text and paragraph (b)(4) introductory text, by revising the words ''representative or alternate'' to read ''representative and alternate''.

§ 96.184 [Amended]

■ 11. Section 96.184 is amended, in paragraph (c) introductory text, by revising the words ''heat rate'' to read ''heat input''.

§ 96.187 [Amended]

■ 12. Section 96.187 is amended, in paragraph (b)(2)(ii), by revising the words ''CAIR NO_X unit that'' to read ''CAIR NO_X opt-in unit that''.

§ 96.202 [Amended]

■ 13. Section 96.202 is amended as follows:
■ a. In the definition of ''Alternate CAIR designated representative'', by revising the words ''source in accordance'' to read ''source, in accordance''.
■ b. In the definition of ''CAIR NO_X Annual Trading Program'', by revising the words ''§ 51.123'' to read ''§ 51.123(o)(1) or (2)'';
■ c. In the definition of ''CAIR NO_X Ozone Season Trading Program'', by revising the words ''§ 51.123'' to read ''§ 51.123(aa)(1) or (2) (and (bb)(1)), (bb)(2), or (dd)'';
■ d. In the definition of ''CAIR SO_2 allowance'' in paragraph (4), by revising the words ''(Program, provisions'' to read ''Program, provisions''.
■ e. In the definition of ''CAIR SO_2 Trading Program'', by revising the words ''§ 51.124'' to read ''§ 51.124(o)(1) or (2)''.

§ 96.206 [Amended]

■ 14. Section 96.206 is amended, in paragraph (c)(4), by revising the words ''subparts FFF and GGG'' to read ''subparts FFF, GGG, and III''.

§ 96.215 [Amended]

■ 15. Section 96.215 is amended, in paragraph (c) introductory text, by revising the words ''Administrator that'' to read ''Administrator, that''.

§ 96.251 [Amended]

■ 16. Section 96.251 is amended, in paragraph (b)(2) introductory text and paragraph (b)(4) introductory text, by revising the words ''*representative or alternate*'' to read ''*representative and alternate*''.

§ 96.254 [Amended]

■ 17. Section 96.254 is amended, in paragraph (e), by revising the words ''of this section) and'' to read ''of this section and''.

§ 96.271 [Amended]

■ 18. Section 96.271 is amended, in paragraph (d)(2), by revising the words ''include: Replacement'' to read ''include: replacement''.

§ 96.284 [Amended]

■ 19. Section 96.284 is amended, in paragraph (c) introductory text, by revising the words ''heat rate'' to read ''heat input''.

§ 96.287 [Amended]

■ 20. Section 96.287 is amended, in paragraph (b)(2)(ii), by revising the words ''CAIR SO_2 unit that'' to read ''CAIR SO_2 opt-in unit that''.

§ 96.302 [Amended]

■ 21. Section 96.302 is amended as follows:
■ a. In the definition of ''Alternate CAIR designated representative'', by revising the words ''source in accordance'' to read ''source, in accordance''.
■ b. In the definition of ''CAIR NO_X Annual Trading Program'', by revising the words ''§ 51.123'' to read ''§ 51.123(o)(1) or (2)'';
■ c. In the definition of ''CAIR NO_X Ozone Season Trading Program'', by revising the words ''§ 51.123'' to read ''§ 51.123(aa)(1) or (2) (and (bb)(1)), (bb)(2), or (dd)'';
■ d. In the definition of ''CAIR SO_2 Trading Program'', by revising the words ''§ 51.124'' to read ''§ 51.124(o)(1) or (2)''.
■ e. In the definition of ''Commence commercial operation'' in paragraph (1)(i), by revising the word ''97.304'' to read ''96.304''.

§ 96.304 [Amended]

■ 22. Section 96.304 is amended, in paragraph (a)(1), by revising the words ''part: Any'' to read ''part: any''.

§ 96.342 [Amended]

■ 23. Section 96.342 is amended, in paragraph (c)(2), by revising the words ''NO_X allowances'' to read ''NO_X Ozone Season allowances'' and by revising the words ''February 1 of'' to read ''February 1 before''.

§ 96.351 [Amended]

■ 24. Section 96.351 is amended, in paragraph (b)(2) introductory text and paragraph (b)(4) introductory text, by revising the words ''*representative or alternate*'' to read ''*representative and alternate*''.

§ 96.371 [Amended]

■ 25. Section 96.371 is amended, in paragraph (d)(2), by revising the words ''include: Replacement'' to read ''include: replacement''.

§ 96.384 [Amended]

■ 26. Section 96.384 is amended, in paragraph (c) introductory text, by revising the words ''heat rate'' to read ''heat input''.

§ 96.387 [Amended]

■ 27. Section 96.387 is amended, in paragraph (b)(2)(ii), by revising the words ''CAIR NO_X Ozone Season unit that'' to read ''CAIR NO_X Ozone Season opt-in unit that''.

PART 97—[AMENDED]

■ 28. The authority citation for part 97 continues to read as follows:

Authority: 42 U.S.C. 7401, 7403, 7410, 7426, 7601, and 7651, *et seq.*

§ 97.102 [Amended]

■ 29. Section 97.102 is amended as follows:
■ a. In the definition of ''Alternate CAIR designated representative'', by revising the words ''source in accordance'' to read ''source, in accordance''; and
■ b. In the definition of ''CAIR NO_X Ozone Season Trading Program'', by revising the words ''accordance with under subparts AAAA through IIII'' to read ''accordance with subparts AAAA through IIII of part 96''.

§ 97.113 [Amended]

■ 30. Section 97.113 is amended, in paragraph (a)(4)(iv), by revising the words ''(Where there are'' to read ''Where there are''.

§ 97.143 [Amended]

■ 31. Section 97.143 is amended, in paragraph (c) introductory text and paragraph (c)(2) introductory text, by revising the words ''CAIR NO_X emissions'' to read ''the CAIR NO_X emissions''.

§ 97.144 [Amended]

■ 32. Section 97.144 is amended, in paragraph (c)(2), by revising the words ''State(s compliance'' to read ''State's compliance''.

§ 97.184 [Amended]

■ 33. Section 97.184 is amended, in paragraph (c) introductory text, by revising the words ''heat rate'' to read ''heat input''.

§ 97.187 [Amended]

■ 34. Section 97.187 is amended, in paragraph (b)(2)(ii), by revising the words ''CAIR NO_X unit that'' to read ''CAIR NO_X opt-in unit that''.

§ 97.202 [Amended]

■ 35. Section 97.202 is amended as follows:
■ a. In the definition of ''Alternate CAIR designated representative'', by revising the words ''source in accordance'' to read ''source, in accordance'';
■ b. In the definition of ''CAIR NO_X Annual Trading Program'', by revising the word ''(§ 51.123(p)'' to read ''§ 51.123(p)''; and
■ c. In the definition of ''CAIR NO_X Ozone Season Trading Program'', by revising the word ''(§ 51.123(ee)'' to read ''§ 51.123(ee)'' and by revising the words ''accordance with under subparts AAAA through IIII'' to read ''accordance with subparts AAAA through IIII of part 96''.

§ 97.283 [Amended]

■ 36. Section 97.283 is amended as follows:
■ a. In paragraph (a)(2)(iii), by revising the words ''Is not, and'' to read ''Is not and,''; and
■ b. In paragraph (a)(2)(iv),by revising the words ''stack, and'' to read ''stack; and''.

§ 97.284 [Amended]

■ 37. Section 97.284 is amended as follows:
■ a. In paragraph (c) introductory text, by revising the words ''heat rate'' to read ''heat input'';
■ b. In paragraph (c)(2), by revising the words ''unit(s'' to read ''unit's''; and
■ c. In paragraph (d)(2), by revising the words ''and (b)(2)'' to read ''and (2)''.

§ 97.287 [Amended]

■ 38. Section 97.287 is amended, in paragraph (b)(2)(ii), by revising the words ''CAIR SO_2 unit that'' to read ''CAIR SO_2 opt-in unit that''.

§ 97.302 [Amended]

■ 39. Section 97.302 is amended as follows:
■ a. In the definition of ''Alternate CAIR designated representative'', by revising the words ''source in accordance'' to read ''source, in accordance'';
■ b. In the definition of ''CAIR NO_X Ozone Season Trading Program'', by revising the words ''accordance with under subparts AAAA through IIII'' to read ''accordance with subparts AAAA through IIII of part 96'';
■ c. In the definition of ''Reference method'', by revising the words ''(75.22'' to read ''§ 75.22''; and
■ d. In the definition of ''State'', by revising with words ''(52.35'' to read ''§ 52.35''.

§ 97.371 [Amended]

■ 40. Section 97.371 is amended, in paragraph (d)(2), by revising the words ''include: Replacement'' to read ''include: replacement''.

§ 97.384 [Amended]

■ 41. Section 97.384 is amended, in paragraph (c) introductory text, by revising the words ''heat rate'' to read ''heat input''.

§ 97.387 [Amended]

■ 42. Section 97.387 is amended, in paragraph (b)(2)(ii), by revising the words ''CAIR NO_X Ozone Season unit that'' to read ''CAIR NO_X Ozone Season opt-in unit that'' and by revising the words ''(97.304'' to read ''§ 97.304''.

[FR Doc. E6–21199 Filed 12–12–06; 8:45 am]

BILLING CODE 6560–50–P

ENVIRONMENTAL PROTECTION AGENCY

40 CFR Part 180

[EPA–HQ–OPP–2006–0902; FRL–8105–5]

Clothianidin; Pesticide Tolerances

AGENCY: Environmental Protection Agency (EPA).

ACTION: Final rule.

SUMMARY: This regulation establishes tolerances for residues of clothianidin in or on sorghum (grain, forage, and stover) and cotton (undelinted and gin byproducts). Bayer CropScience requested these tolerances under the Federal Food, Drug, and Cosmetic Act (FFDCA), as amended by the Food Quality Protection Act of 1996 (FQPA). In addition, this establishes time-limited tolerances for residues of clothianidin, in or on beet, sugar, roots, and beet, sugar, tops. This action is in response to EPA's granting of an emergency exemption under section 18 of the Federal Insecticide, Fungicide, and Rodenticide Act (FIFRA) authorizing use of the pesticide on sugar beet seeds. This regulation establishes a maximum permissible level for residues of clothianidin in these food commodities. The tolerances for sugar beet commodities expire and are revoked on December 31, 2009. This regulation establishes tolerances for residues of clothianidin in or on grapes, potatoes, and potatoes, granules/flakes. Arvesta Corporation requested these tolerances under the FFDCA, as amended by the Food Quality Protection Act of 1996 (FQPA).

DATES: This regulation is effective December 13, 2006. Objections and requests for hearings must be received on or before February 12, 2007, and must be filed in accordance with the instructions provided in 40 CFR part 178 (see also Unit I.C. of the **SUPPLEMENTARY INFORMATION**).

ADDRESSES: EPA has established a docket for this action under docket identification (ID) number EPA–HQ–OPP–2006–0902. All documents in the docket are listed in the index for the docket. Although listed in the index, some information is not publicly available, e.g., Confidential Business Information (CBI) or other information whose disclosure is restricted by statute. Certain other material, such as

copyrighted material, is not placed on the Internet and will be publicly available only in hard copy form. Publicly available docket materials are available in the electronic docket at *http://www.regulations.gov*, or, if only available in hard copy, at the OPP Regulatory Public Docket in Rm. S-4400, One Potomac Yard (South Building), 2777 S. Crystal Drive, Arlington, VA. The Docket Facility is open from 8:30 a.m. to 4 p.m., Monday through Friday, excluding legal holidays. The Docket telephone number is (703) 305–5805.

FOR FURTHER INFORMATION CONTACT:

Kable Bo Davis, Registration Division (7505P), Office of Pesticide Programs, Environmental Protection Agency, 1200 Pennsylvania Ave., NW., Washington, DC 20460–0001; telephone number: (703) 306–0415; e-mail address: *Davis.Kable@epa.gov*.

SUPPLEMENTARY INFORMATION:

I. General Information

A. Does this Action Apply to Me?

You may be potentially affected by this action if you are an agricultural producer, food manufacturer, or pesticide manufacturer. Potentially affected entities may include, but are not limited to:

- Crop production (NAICS 111), e.g., agricultural workers; greenhouse, nursery, and floriculture workers; farmers.
- Animal production (NAICS 112), e.g., cattle ranchers and farmers, dairy cattle farmers, livestock farmers.
- Food manufacturing (NAICS 311), e.g., agricultural workers; farmers; greenhouse, nursery, and floriculture workers; ranchers; pesticide applicators.
- Pesticide manufacturing (NAICS 32532), e.g., agricultural workers; commercial applicators; farmers; greenhouse, nursery, and floriculture workers; residential users.

This listing is not intended to be exhaustive, but rather provides a guide for readers regarding entities likely to be affected by this action. Other types of entities not listed in this unit could also be affected. The North American Industrial Classification System (NAICS) codes have been provided to assist you and others in determining whether this action might apply to certain entities. If you have any questions regarding the applicability of this action to a particular entity, consult the person listed under **FOR FURTHER INFORMATION CONTACT**.

B. How Can I Access Electronic Copies of this Document?

In addition to accessing an electronic copy of this **Federal Register** document through the electronic docket at *http://www.regulations.gov*, you may access this **Federal Register** document electronically through the EPA Internet under the ''**Federal Register**'' listings at *http://www.epa.gov/fedrgstr*. You may also access a frequently updated electronic version of 40 CFR part 180 through the Government Printing Office's pilot e-CFR site at *http://www.gpoaccess.gov/ecfr*. To access the OPPTS Harmonized Guidelines referenced in this document, go directly to the guidelines at *http://www.epa.gpo/opptsfrs/home/guidelin.htm*

C. Can I File an Objection or Hearing Request?

Under section 408(g) of the FFDCA, as amended by the FQPA, any person may file an objection to any aspect of this regulation and may also request a hearing on those objections. The EPA procedural regulations which govern the submission of objections and requests for hearings appear in 40 CFR part 178. You must file your objection or request a hearing on this regulation in accordance with the instructions provided in 40 CFR part 178. To ensure proper receipt by EPA, you must identify docket ID number EPA–HQ–OPP–2006–0902. in the subject line on the first page of your submission. All requests must be in writing, and must be mailed or delivered to the Hearing Clerk on or before February 12, 2007.

In addition to filing an objection or hearing request with the Hearing Clerk as described in 40 CFR part 178, please submit a copy of the filing that does not contain any CBI for inclusion in the public docket that is described in **ADDRESSES**. Information not marked confidential pursuant to 40 CFR part 2 may be disclosed publicly by EPA without prior notice. Submit your copies, identified by docket ID number EPA–HQ–OPP–2006–0902., by one of the following methods:

- *Federal eRulemaking Portal: http://www.regulations.gov*. Follow the on-line instructions for submitting comments.
- *Mail*: Office of Pesticide Programs (OPP) Regulatory Public Docket (7502P), Environmental Protection Agency, 1200 Pennsylvania Ave., NW., Washington, DC 20460–0001.
- *Delivery*: OPP Regulatory Public Docket (7502P), Environmental Protection Agency, Rm. S-4400, One Potomac Yard (South Building), 2777 S. Crystal Drive, Arlington, VA. Deliveries are only accepted during the Docket's normal hours of operation (8:30 a.m. to 4 p.m., Monday through Friday, excluding legal holidays). Special arrangements should be made for deliveries of boxed information. The Docket telephone number is (703) 305–5805.

II. Background and Statutory Findings

In the **Federal Register** of December 8, 2004 (69 FR 71036) (FRL–7687–4), EPA issued a notice pursuant to section 408(d)(3) of FFDCA, 21 U.S.C. 346a(d)(3), announcing the filing of a pesticide petition (PP 4F6869) by Arvesta Corporation, 15401 Weston PKWY Suite 150, Cary, North Carolina 27513. The petition requested that 40 CFR 180.586 be amended by establishing tolerances for residues of the insecticide clothianidin, (E)-1-(2-chloro-1,3-thiazol-5-ylmethyl)-3-methyl-2-nitroguanidine, in or on grapes at 0.5 parts per million (ppm), raisins at 1.0 ppm, and potatoes at 0.1 ppm. That notice included a summary of the petition prepared by Arvesta Corporation, the registrant. There were no comments received in response to the notice of filing.

In the **Federal Register** of June 16, 2004 (69 FR 33635) (FRL–7350–6), EPA issued a notice pursuant to section 408(d)(3) of FFDCA, 21 U.S.C. 346a(d)(3), announcing the filing of a pesticide petition (PP 3F6792) by Bayer CropScience, 2 T.W. Alexander Drive, Research Triangle Park, North Carolina 27709. The petition requested that 40 CFR 180.586 be amended by establishing tolerances for residues of the insecticide clothianidin, (E)-1-(2-chloro-1,3-thiazol-5-ylmethyl)-3-methyl-2-nitroguanidine, in or on sorghum, grain at 0.01 ppm, sorghum, forage at 0.01 ppm, and sorghum, stover at 0.01 ppm. That notice included a summary of the petition prepared by Bayer CropScience, the registrant. There were no comments received in response to the notice of filing.

In the **Federal Register** of December 14, 2005 (70 FR 74003) (FRL–7747–4), EPA issued a notice pursuant to section 408(d)(3) of FFDCA, 21 U.S.C. 346a(d)(3), announcing the filing of a pesticide petition (PP 5F6908) by, Bayer CropScience, 2 T.W. Alexander Drive Research Triangle Park, North Carolina 27709. The petition requested that 40 CFR 180.586 be amended by establishing tolerances for residues of the insecticide clothianidin, (E)-1-(2-chloro-1,3-thiazol-5-ylmethyl)-3-methyl-2-nitroguanidine, in or on cotton, undelinted at 0.01 ppm, and cotton, gin byproducts at 0.01 ppm. That notice included a summary of the petition prepared by Bayer CropScience, the registrant. There were no comments received in response to the notice of filing.

Upon completing review of the current clothianidin database, the

Agency concluded that the appropriate tolerance levels for clothianidin residues in or on pending crops should be established as follows: Sorghum, grain at 0.01 ppm, sorghum, forage at 0.01 ppm, sorghum, stover at 0.01 ppm, cotton, undelinted seed at 0.01 ppm, cotton, gin byproducts at 0.01 ppm, grape at 0.60 ppm, potato at 0.05 ppm, and potato, granules/flakes at 0.08 ppm. In addition, the proposed tolerance for raisins was withdrawn because based on available processing data, a tolerance for this commodity is not needed.

EPA is also establishing time-limited tolerances for combined residues of the insecticide, clothianidin, in or on beet, sugar, roots, and beet, sugar, tops at 0.02 ppm. These tolerances expire and are revoked on December 31, 2009. The beet tolerances are being established in response to a regional crisis exemption request on behalf of Colorado, North Dakota, and Wyoming under FIFRA section 18 for the emergency use of clothianidin as a seed treatment on sugar beet seeds to control the beet leafhopper, which is a vector of the beet curly top virus in certain sugar beet growing regions throughout the western United States.

As part of its assessment of this emergency exemption request, EPA assessed the potential risks presented by residues of clothianidin in or on beet, sugar, roots, and beet, sugar, tops. In doing so, EPA considered the safety standard in section 408(b)(2) of the FFDCA, and EPA decided that the necessary tolerances under section 408(l)(6) of the FFDCA would be consistent with the safety standard and with FIFRA section 18. Consistent with the need to move quickly on the emergency exemption in order to address the urgent non–routine situation and to ensure that the resulting food is safe and lawful, EPA is issuing the tolerances without notice and opportunity for public comment as provided in section 408(l)(6) of the FFDCA. Although these tolerances expire and are revoked on December 31, 2009, under section 408(l)(5) of the FFDCA, residues of the pesticide not in excess of the amount specified in the tolerances remaining in or on beet, sugar, roots, and beet, sugar, tops after that date will not be unlawful, provided the pesticide is applied in a manner that was lawful under FIFRA, and the residues do not exceed a level that was authorized by this tolerance at the time of that application. EPA will take action to revoke these tolerances earlier if any experience with, scientific data on, or other relevant information on this pesticide indicate that the residues are not safe.

Because the tolerances are being approved under emergency conditions, EPA has not made any decisions about whether clothianidin meets EPA's registration requirements for use on beet, sugar, roots, and beet, sugar, tops or whether permanent tolerances for this use would be appropriate. Under these circumstances, EPA does not believe that these tolerances serve as a basis for registration of clothianidin by a State for special local needs under FIFRA section 24(c). Nor do these tolerances serve as the basis for any States other than Oregon, Colorado, North Dakota, and Wyoming to use this pesticide on this crop under section 18 of FIFRA without following all provisions of EPA's regulations implementing FIFRA section 18 as identified in 40 CFR part 166. For additional information regarding the emergency exemption for clothianidin, contact the Agency's Registration Division at the address provided under **FOR FURTHER INFORMATION CONTACT.**

Section 408(b)(2)(A)(i) of FFDCA allows EPA to establish a tolerance (the legal limit for a pesticide chemical residue in or on a food) only if EPA determines that the tolerance is ''safe.'' Section 408(b)(2)(A)(ii) of FFDCA defines ''safe'' to mean that ''there is a reasonable certainty that no harm will result from aggregate exposure to the pesticide chemical residue, including all anticipated dietary exposures and all other exposures for which there is reliable information.'' This includes exposure through drinking water and in residential settings, but does not include occupational exposure. Section 408(b)(2)(C) of FFDCA requires EPA to give special consideration to exposure of infants and children to the pesticide chemical residue in establishing a tolerance and to ''ensure that there is a reasonable certainty that no harm will result to infants and children from aggregate exposure to the pesticide chemical residue. . . .''

EPA performs a number of analyses to determine the risks from aggregate exposure to pesticide residues. For further discussion of the regulatory requirements of section 408 of the FFDCA and a complete description of the risk assessment process, see *http://www.epa.gov/fedrgstr/EPA–PEST/1997/November/Day–26/p30948.htm.*

III. Aggregate Risk Assessment and Determination of Safety

Consistent with section 408(b)(2)(D) of FFDCA, EPA has reviewed the available scientific data and other relevant information in support of this action. EPA has sufficient data to assess the hazards of and to make a determination on aggregate exposure, consistent with section 408(b)(2) of FFDCA, for tolerances for residues of clothianidin (E)-1-(2-chloro-1,3-thiazol-5-ylmethyl)-3-methyl-2-nitroguanidine, in or on grapes at 0.60 ppm, potatoes at 0.05 ppm, potatoes, granules/flakes at 0.08 ppm, sorghum, grain at 0.01 ppm, sorghum, forage at 0.01 ppm, sorghum, stover at 0.01 ppm, cotton, undelinted at 0.01 ppm, and cotton, gin byproducts at 0.01 ppm, and beet, sugar, roots at 0.02 ppm, and beet, sugar, tops at 0.02 ppm. EPA's assessment of exposures and risks associated with establishing the tolerance follows.

A. Toxicological Profile

EPA has evaluated the available toxicity data and considered its validity, completeness, and reliability as well as the relationship of the results of the studies to human risk. EPA has also considered available information concerning the variability of the sensitivities of major identifiable subgroups of consumers, including infants and children. Specific information on the studies received and the nature of the toxic effects caused by clothianidin as well as the no-observed-adverse-effect-level (NOAEL) and the lowest-observed-adverse-effect-level (LOAEL) from the toxicity studies can be found at *http://www.epa.gov/EPA-PEST/2003/May/Day-30/p13564.htm.*

B. Toxicological Endpoints

For hazards that have a threshold below which there is no appreciable risk, the dose at which the NOAEL are observed from the toxicology study identified as appropriate for use in risk assessment is used to estimate the toxicological level of concern (LOC). However, the LOAEL of concern are identified is sometimes used for risk assessment if no NOAEL was achieved in the toxicology study selected. An uncertainty factor (UF) is applied to reflect uncertainties inherent in the extrapolation from laboratory animal data to humans and in the variations in sensitivity among members of the human population as well as other unknowns.

The linear default risk methodology (Q*) is the primary method currently used by the Agency to quantify non-threshold hazards such as cancer. The Q* approach assumes that any amount of exposure will lead to some degree of cancer risk, estimates risk in terms of the probability of occurrence of additional cancer cases. More information can be found on the general principles EPA uses in risk characterization at *http://www.epa.gov/pesticides/health/human.htm.*

A summary of the toxicological endpoints for clothianidin used for human risk assessment can be found at www.regulations.gov (pages 18–20) in Docket ID EPA–HQ–OPP–2006–0902. To locate this information on the regulations.gov website follow these steps:

1. Select ''Advanced Search'', then ''Docket Search''
2. In ''Keyword'' field type the chemical name or insert the applicable ''Docket ID number.'' (example: EPA–HQ–OPP–2005–9999).
3. Click the ''Submit'' button.

Follow the instructions on the regulations.gov website to view the index for the docket and access available documents.

C. Exposure Assessment

1. *Dietary exposure from food and feed uses*. Tolerances have been established (40 CFR 180.586) for the residues of clothianidin, in or on a variety of raw agricultural commodities. Tolerances have also been established for residues of clothianidin in milk. Risk assessments were conducted by EPA to assess dietary exposures from clothianidin in food as follows:

i. *Acute exposure*. Quantitative acute dietary exposure and risk assessments are performed for a food-use pesticide, if a toxicological study has indicated the possibility of an effect of concern occurring as a result of a one–day or single exposure.

In conducting the acute dietary exposure assessment EPA used the Dietary Exposure Evaluation Model software with the Food Commodity Intake Database (DEEM-FCID™), which incorporates food consumption data as reported by respondents in the United States Department of Agriculture (USDA) 1994–1996 and 1998 Nationwide Continuing Surveys of Food Intake by Individuals (CSFII), and accumulated exposure to the chemical for each commodity. The following assumptions were made for the acute exposure assessments: The acute dietary exposure assessment is based on maximum residues of clothianidin observed in clothianidin and thiamethoxam field trials and assumed 100 percent crop treated (%CT).

ii. *Chronic exposure*. In conducting the chronic dietary exposure assessment EPA used the DEEM-FCID™, which incorporates food consumption data as reported by respondents in the USDA 1994–1996 and 1998 Nationwide CSFII, and accumulated exposure to the chemical for each commodity. The following assumptions were made for the chronic exposure assessments: The chronic assessment is based on average residues from clothianidin field trials and also assumes 100% CT.

iii. *Cancer*. Because clothianidin has been classified as a ''not likely human carcinogen'', a cancer risk assessment is not required.

iv. *Anticipated residue and percent crop treated (PCT) information*. Section 408(b)(2)(E) of the FFDCA authorizes EPA to use available data and information on the anticipated residue levels of pesticide residues in food and the actual levels of pesticide chemicals that have been measured in food. If EPA relies on such information, EPA must pursuant to section 408(f)(1) require that data be provided 5 years after the tolerance is established, modified, or left in effect, demonstrating that the levels in food are not above the levels anticipated. Following the initial data submission, EPA is authorized to require similar data on a time frame it deems appropriate. For the present action, EPA will issue such data call-ins for information relating to anticipated residues as are required by FFDCA section 408(b)(2)(E) and authorized under FFDCA section 408(f)(1). Such data call-ins will be required to be submitted no later than 5 years from the date of issuance of this tolerance.

The Agency used PCT information as follows:

The acute assessment is based on maximum residues of clothianidin observed in clothianidin field trials and assumes 100% CT. The chronic assessment is based on average residues from clothianidin field trials and also assumes 100% CT.

The Agency believes that the three conditions listed have been met. With respect to Condition 1, PCT estimates are derived from Federal and private market survey data, which are reliable and have a valid basis. The Agency is reasonably certain that the percentage of the food treated is not likely to be an underestimation. As to Conditions 2 and 3, regional consumption information and consumption information for significant subpopulations is taken into account through EPA's computer-based model for evaluating the exposure of significant subpopulations including several regional groups. Use of this consumption information in EPA's risk assessment process ensures that EPA's exposure estimate does not understate exposure for any significant subpopulation group and allows the Agency to be reasonably certain that no regional population is exposed to residue levels higher than those estimated by the Agency. Other than the data available through national food consumption surveys, EPA does not have available information on the regional consumption of food to which clothianidin may be applied in a particular area.

2. *Dietary exposure from drinking water*. The Agency lacks sufficient monitoring exposure data to complete a comprehensive dietary exposure analysis and risk assessment for clothianidin in drinking water. Because the Agency does not have comprehensive monitoring data, drinking water concentration estimates are made by reliance on simulation or modeling taking into account data on the physical characteristics of clothianidin. Further information regarding EPA drinking water models used in pesticide exposure assessment can be found at *http://www.epa.gov/oppefed1/models/water/index.htm*.

Based on the First Index Reservoir Screening Tool (FIRST) and Screening Concentration in Ground Water (SCI-GROW) models, the estimated environmental concentrations (EECs) of clothianidin for acute exposures are 7.29 parts per billion (ppb) for surface water and 5.84 ppb for ground water. The EECs for chronic exposures are 1.35 ppb for surface water and 5.84 ppb for ground water.

3. *From non-dietary exposure*. The term ''residential exposure'' is used in this document to refer to non-occupational, non-dietary exposure (e.g., for lawn and garden pest control, indoor pest control, termiticides, and flea and tick control on pets).

Clothianidin is currently registered for use on the following residential non-dietary sites: Turfgrass. The risk assessment was conducted using the following residential exposure assumptions: The following exposure scenarios were assessed for residential post-application risks: toddlers playing on treated turf, adults performing yard work on treated turf, and adults and youths playing golf on treated turf. Additional information on residential exposure assumptions can be found at www.regulations.gov (Docket ID EPA–HQ–OPP–2006–0902, pages 27 through 29).

4. *Cumulative effects from substances with a common mechanism of toxicity*. Section 408(b)(2)(D)(v) of the FFDCA requires that, when considering whether to establish, modify, or revoke a tolerance, the Agency consider ''available information'' concerning the cumulative effects of a particular pesticide's residues and ''other substances that have a common mechanism of toxicity.''

Clothianidin is a member of the neonicotinoid class of pesticides and is a metabolite of another neonicotinoid, thiamethoxam. Structural similarities or

common effects do not constitute a common mechanism of toxicity. Evidence is needed to establish that the chemicals operate by the same, or essentially the same sequence of major biochemical events (EPA, 2002). Although clothianidin and thiamethoxam bind selectively to insect nicotinic acetylcholine receptors (nAChR), the specific binding site(s)/receptor(s) for clothianidin, thiamethoxam, and the other neonicotinoids are unknown at this time. Additionally, the commonality of the binding activity itself is uncertain, as preliminary evidence suggests that clothianidin operates by direct competitive inhibition, while thiamethoxam is a non-competitive inhibitor. Furthermore, even if future research shows that neonicotinoids share a common binding activity to a specific site on insect nicotinic acetylcholine receptors, there is not necessarily a relationship between this pesticidal action and a mechanism of toxicity in mammals. Structural variations between the insect and mammalian nAChRs produce quantitative differences in the binding affinity of the neonicotinoids towards these receptors, which, in turn, confers the notably greater selective toxicity of this class towards insects, including aphids and leafhoppers, compared to mammals. While the insecticidal action of the neonicotinoids is neurotoxic, the most sensitive regulatory endpoint for clothianidin is based on unrelated effects in mammals, including changes in body and thymus weights, delays in sexual maturation, and still births. Additionally, the most sensitive toxicological effect in mammals differs across the neonicotinoids (e.g., testicular tubular atrophy with thiamethoxam; mineralized particles in thyroid colloid with imidaclopid). Thus, there is currently no evidence to indicate that neonicotinoids share common mechanisms of toxicity, and EPA is not following a cumulative risk approach based on a common mechanism of toxicity for the neonicotinoids. For information regarding EPA's efforts to determine which chemicals have a common mechanism of toxicity and to evaluate the cumulative effects of such chemicals, see the policy statements concerning common mechanism determinations and procedures for cumulating effects from substances found to have a common mechanism released by EPA's Office of Pesticide Programs on EPA's website at *http://www.epa.gov/pesticides/cumulative/*.

Note that because clothianidin is a major metabolite of thiamethoxam, EPA has combined exposure to clothianidin resulting both from thiamethoxam use and from use of clothianidin as an active ingredient and has compared this aggregate exposure estimate to relevant endpoints for clothianidin. EPA has taken the further conservative step of assuming that, in instances where both thiamethoxam and clothianidin are registered for use on a crop, both pesticides will, in fact, be used on that crop.

D. Safety Factor for Infants and Children

1. *In general*. Section 408 of FFDCA provides that EPA shall apply an additional tenfold margin of safety for infants and children in the case of threshold effects to account for prenatal and postnatal toxicity and the completeness of the data base on toxicity and exposure unless EPA determines based on reliable data that a different margin of safety will be safe for infants and children. Margins of safety are incorporated into EPA risk assessments either directly through use of a margin of exposure (MOE) analysis or through using uncertainty (safety) factors in calculating a dose level that poses no appreciable risk to humans. In applying this provision, EPA either retains the default value of 10X when reliable data do not support the choice of a different factor, or, if reliable data are available, EPA uses a different additional safety factor value based on the use of traditional uncertainty factors and/or special FQPA safety factors, as appropriate.

2. *Prenatal and postnatal sensitivity*. In the developmental neurotoxicity study, toxicity in the offspring was observed at a lower dose level than the dose that caused toxicity in the maternal animals. Maternal effects included decreased body weights, body weight gains, and food consumption. Effects seen in the offspring included decreased body weights, body weight gains, motor activity, and acoustic startle response in the females. However, EPA determined that the degree of concern for the developmental neurotoxicity study is low and there are no residual uncertainties for prenatal and/or postnatal toxicity due to the results of the developmental neurotoxicity study because the observed effects are well characterized and there are clear NOAELs/LOAELs.

In the two-generation reproduction study, offspring toxicity (decreased body weight gains, delayed sexual maturation in males, decreased absolute thymus weights in F1 pups of both sexes, and an increase in stillbirths in both generations) was seen at a lower dose than the dose that caused parental toxicity. Based on evidence of decreased absolute and adjusted organ weights of the thymus and spleen in multiple studies in the clothianidin data base and on evidence of increased quantitative susceptibility of juvenile rats, compared to adults, in the two-generation reproduction study to these effects. EPA has required that testing be conducted to assess immune system function in adults and in young animals following exposure during the period of organogenesis. No quantitative or qualitative susceptibility was observed in either of the developmental rat or rabbit studies. In the rat, no developmental toxicity was observed at the highest dose tested, although this dose level induced decreases in body weight gain and food consumption in the dams. In the rabbit, premature deliveries, decreased gravid uterine weights, an increase in litter incidence of a missing lobe of the lung, and a decrease in the litter average for ossified sternal centra per fetus were noted at a dose level in which maternal death, a decrease in food consumption, and clinical signs (scant feces and orange urine) were observed. Since the developmental effects observed in the rabbit study were seen in the presence of maternal toxicity, they are not considered to be qualitatively more severe than the maternal effects.

3. *Conclusion*. The exposure data for clothianidin are complete or are estimated based on data that reasonably accounts for potential exposures. The acute dietary exposure assessment is based on maximum residues of clothianidin observed in clothianidin and thiamethoxam field trials and assumes 100% CT. The chronic assessment is based on average residues from clothianidin and thiamethoxam field trials and also assumes 100% CT. For water, the highest acute estimate from conservative models was used for both the acute and the chronic dietary exposure analyses. By using these conservative assessments, acute and chronic exposures/risks will not be underestimated. The residential exposure assessment utilizes residential standard operation procedures (SOPs) to assess post-application exposure to children as well as incidental oral ingestion by toddlers. The residential SOPs are based on reasonable worst-case assumptions and will not likely underestimate exposure/risk. These assessments are unlikely to underestimate the potential exposure to

infants and children resulting from the use of clothianidin.

The toxicology data base for clothianidin, however, is not complete for FQPA purposes. A complete complement of acceptable developmental, reproduction, developmental neurotoxicity, mammalian neurotoxicity and special neurotoxicity studies are available; however, due to evidence of decreased absolute and adjusted organ weights of the thymus and spleen in multiple studies in the clothianidin data base, and because juvenile rats in the two-generation reproduction study appear to be more susceptible to these effects, EPA has determined that testing should be conducted to assess immune system function in adults and in young animals following developmental exposures. Given the levels at which this testing should be conducted it could result in selection of a more protective (i.e., lower) regulatory endpoint.

Due to the uncertainty with regard to potential effects on immune system function in young animals, EPA cannot conclude that there are reliable data supporting selection of a children's safety factor different from the presumptive 10X factor. Therefore, the 10X FQPA children's safety factor will be retained. This safety factor will be in the form of a database uncertainty factor to account for the lack of the testing with regard to immune system function with clothianidin.

E. Aggregate Risks and Determination of Safety

1. *Acute risk*. Using the exposure assumptions discussed in this unit for acute exposure, the acute dietary exposure from food to clothianidin will occupy 11% of the acute population adjusted dose (aPAD) for the U.S. population, 8% of the aPAD for females 13-49 years, 31% of the aPAD for all infants (<1 year old), and 45% of the aPAD for children 1-2 years old. The acute aggregate risks associated with the registered and proposed uses of clothianidin do not exceed the Agency's level of concern for the general U.S. population or any population subgroup.

2. *Chronic risk*. For the chronic exposure assessments the residues of concern are clothianidin. Using the exposure assumptions described in this unit for chronic exposure, EPA has concluded that exposure to clothianidin from food and water will utilize 5% of the chronic population adjusted dose (cPAD) for the U.S. population, 13% of the cPAD for all infants (< 1 year old), and 16% of the cPAD for children 1-2 years old. Based on the use pattern, chronic residential exposure to residues of clothianidin is not expected. The long-term aggregate risks associated with clothianidin exposure resulting from the registered and proposed uses of clothianidin and from the registered uses of thiamethoxam do not exceed the Agency's level of concern for the general U.S. population or any population subgroup.

3. *Short-term/Intermediate-term risk*. Short-term aggregate and intermediate-term aggregate exposures takes into account residential exposure plus chronic exposure to food and water (considered to be a background exposure level).

Clothianidin is currently registered for use that could result in short-term and intermediate-term residential exposure and the Agency has determined that it is appropriate to aggregate chronic food and water and short-term exposures for clothianidin.

EPA has determined that, for clothianidin, the toxicological effects are the same across oral, dermal, and inhalation routes of exposure and has selected the same endpoint and dose for short-term and intermediate-term exposure scenarios. Therefore, the exposures are simply summed (combined/aggregated) for use in risk calculations. Short-term and intermediate aggregate risk estimates range from an MOE of 1,100 for toddlers (food + water + treated turf + treated soil + dermal) to 22,000 for youth golfers (food + water + post-application treated turf). The short-term and intermediate-term aggregate risks associated with the registered and proposed uses of clothianidin do not exceed the Agency's level of concern for the general U.S. population or any population subgroup.

4. *Aggregate cancer risk for U.S. population*. Clothianidin has been classified as a ''not likely human carcinogen.'' It is not expected to pose a cancer risk.

5. *Determination of safety*. Based on these risk assessments, EPA concludes that there is a reasonable certainty that no harm will result to the general population, and to infants and children from aggregate exposure to clothianidin residues.

IV. Other Considerations

A. Analytical Enforcement Methodology

Adequate LC/MS/MS methods are available for both collecting data and enforcing tolerances for clothianidin residues in plant (Bayer Methods 00552 and 109240–1) and animal (Bayer Method 00624) commodities. The validated limit of quantitation (LOQ) for clothianidin in plant commodities is 0.010 ppm, except for wheat straw (0.020 ppm), and the validated LOQs are 0.010 ppm in milk and 0.020 ppm in animal tissues. All three of these methods have been approved for tolerance enforcement, and forwarded to FDA for inclusion in PAM Volume II.

In addition, Arvesta has submitted another LC/MS/MS method (Morse Method #Meth-164) for enforcing tolerances and collecting data on residues of clothianidin and TMG in grape and potato commodities. This newer method is similar to Method 00552 and involves extraction of residues with acetonitrile/water, cleanup using solid phase extraction (SPE) cartridges, and the separate analysis of clothianidin and *N*-(2-chloro-5-thiazolymethyl)-*N'*-methylguanidine (TMG) by LC/MS/MS. The validated LOQ for each analyte is 0.020 ppm in all grape and potato matrices, except for potato chips and raisins (with LOQs of 0.040 ppm). The method was adequately validated in conjunction with the field trials and processing studies and has undergone a successful independent laboratory validation (ILV) trial.

B. International Residue Limits

Canadian maximum residue limits (MRLs) have been established for residues of clothianidin at 0.01 milligram/kilogram (mg/kg) in milk, corn and canola. As of February 2006, there are no Canadian, Mexican, or Codex MRLs or tolerances for cotton, sorghum, grapes, or potatoes.

C. Response to Comments

There were no comments received in response to the notice of filing.

V. Conclusion

Therefore, the tolerances are established for residues of clothianidin, (E)-1-(2-chloro-1,3-thiazol-5-ylmethyl)-3-methyl-2-nitroguanidine, in or on grapes at 0.60 ppm, potatoes at 0.05 ppm, potatoes, granules/flakes at 0.08 ppm, sorghum (grain, forage, and stover) at 0.01 ppm, and cotton (undelinted and gin byproducts) at 0.01 ppm. Time-limited tolerances are also established for residues of clothianidin in or on beet, sugar, roots, and beet, sugar, tops at 0.02 ppm.

VI. Statutory and Executive Order Reviews

This final rule establishes a tolerance under section 408(d) of FFDCA in response to a petition submitted to the Agency. The Office of Management and Budget (OMB) has exempted these types of actions from review under Executive Order 12866, entitled *Regulatory Planning and Review* (58 FR 51735,

October 4, 1993). Because this rule has been exempted from review under Executive Order 12866 due to its lack of significance, this rule is not subject to Executive Order 13211, *Actions Concerning Regulations That Significantly Affect Energy Supply, Distribution, or Use* (66 FR 28355, May 22, 2001). This final rule does not contain any information collections subject to OMB approval under the Paperwork Reduction Act (PRA), 44 U.S.C. 3501 *et seq.*, or impose any enforceable duty or contain any unfunded mandate as described under Title II of the Unfunded Mandates Reform Act of 1995 (UMRA) (Public Law 104–4). Nor does it require any special considerations under Executive Order 12898, entitled *Federal Actions to Address Environmental Justice in Minority Populations and Low-Income Populations* (59 FR 7629, February 16, 1994); or OMB review or any Agency action under Executive Order 13045, entitled *Protection of Children from Environmental Health Risks and Safety Risks* (62 FR 19885, April 23, 1997). This action does not involve any technical standards that would require Agency consideration of voluntary consensus standards pursuant to section 12(d) of the National Technology Transfer and Advancement Act of 1995 (NTTAA), Public Law 104–113, section 12(d) (15 U.S.C. 272 note). Since tolerances and exemptions that are established on the basis of a petition under section 408(d) of FFDCA or are established under section 408(1)(6), such as the tolerances in this final rule, do not require the issuance of a proposed rule, the requirements of the Regulatory Flexibility Act (RFA) (5 U.S.C. 601 *et seq.*) do not apply. In addition, the Agency has determined that this action will not have a substantial direct effect on States, on the relationship between the national government and the States, or on the distribution of power and responsibilities among the various levels of government, as specified in Executive Order 13132, entitled *Federalism* (64 FR 43255, August 10, 1999). Executive Order 13132 requires EPA to develop an accountable process to ensure ''meaningful and timely input by State and local officials in the development of regulatory policies that have federalism implications.'' ''Policies that have federalism implications'' is defined in the Executive Order to include regulations that have ''substantial direct effects on the States, on the relationship between the national government and the States, or on the distribution of power and responsibilities among the various levels of government.'' This final rule directly regulates growers, food processors, food handlers and food retailers, not States. This action does not alter the relationships or distribution of power and responsibilities established by Congress in the preemption provisions of section 408(n)(4) of FFDCA. For these same reasons, the Agency has determined that this rule does not have any ''tribal implications'' as described in Executive Order 13175, entitled *Consultation and Coordination with Indian Tribal Governments* (65 FR 67249, November 6, 2000). Executive Order 13175, requires EPA to develop an accountable process to ensure ''meaningful and timely input by tribal officials in the development of regulatory policies that have tribal implications.'' ''Policies that have tribal implications'' is defined in the Executive Order to include regulations that have ''substantial direct effects on one or more Indian tribes, on the relationship between the Federal Government and the Indian tribes, or on the distribution of power and responsibilities between the Federal Government and Indian tribes.'' This rule will not have substantial direct effects on tribal governments, on the relationship between the Federal Government and Indian tribes, or on the distribution of power and responsibilities between the Federal Government and Indian tribes, as specified in Executive Order 13175. Thus, Executive Order 13175 does not apply to this rule.

VII. Congressional Review Act

The Congressional Review Act, 5 U.S.C. 801 *et seq.*, as added by the Small Business Regulatory Enforcement Fairness Act of 1996, generally provides that before a rule may take effect, the agency promulgating the rule must submit a rule report, which includes a copy of the rule, to each House of the Congress and to the Comptroller General of the United States. EPA will submit a report containing this rule and other required information to the U.S. Senate, the U.S. House of Representatives, and the Comptroller General of the United States prior to publication of this final rule in the **Federal Register**. This final rule is not a ''major rule'' as defined by 5 U.S.C. 804(2).

List of Subjects in 40 CFR Part 180

Environmental protection, Administrative practice and procedure, Agricultural commodities, Pesticides and pests, Reporting and recordkeeping requirements.

Dated: december 1, 2006.

Lois Rossi,

Director, Registration Division, Office of Pesticide Programs.

■ Therefore, 40 CFR chapter I is amended as follows:

PART 180—[AMENDED]

■ 1. The authority citation for part 180 continues to read as follows:

Authority: 21 U.S.C. 321(q), 346a and 371.

■ 2. Section 180.586 is amended by alphabetically adding commodities to the table in paragraph (a) to read as follows, and by revising paragraph (b) as follows:

§ 180.586 Clothianidin; tolerances for residues.

(a) * * *

Commodity	Parts per million
* * *	* *
Cotton, gin byproducts	0.01
Cotton, undelinted seed	0.01
* * *	* *
Grape	0.60
* * *	* *
Potato	0.05
Potato, granules/flakes	0.08
Sorghum, forage, grain, stover	0.01

* * * * *

(b) *Section 18 emergency exemptions.* Time-limited tolerances are established for the residues of the insecticide clothianidin, (E)-1-(2-chloro-1,3-thiazol-5-ylmethyl)-3-methyl-2-nitroguanidine, in connection with use of the pesticide under section 18 emergency exemptions granted by EPA. These tolerances will expire and are revoked on the dates specified in the following table:

Commodity	Parts per million	Expiration/revocation date
Beet, sugar, roots	0.02	December 31, 2009
Beet, sugar, tops	0.02	December 31, 2009

* * * * *

[FR Doc. E6–20898 Filed 12–12–06; 8:45 am]

BILLING CODE 6560–50–S

ENVIRONMENTAL PROTECTION AGENCY

40 CFR Part 180

[EPA–HQ–OPP–2002–0043; FRL–8064–3]

Pesticide Tolerance Nomenclature Changes; Technical Amendment

AGENCY: Environmental Protection Agency (EPA).

ACTION: Direct Final rule; technical amendment.

SUMMARY: This document makes minor revisions to the terminology of certain commodity terms listed under 40 CFR part 180, subpart C. EPA is taking this action to establish a uniform listing of commodity terms.

DATES: This Direct Final Rule is effective on February 26, 2007 without notice, unless EPA receives adverse comment by February 12, 2007. If EPA receives adverse comments, EPA will publish a **Federal Register** document to withdraw the direct final rule before the effective date.

If this Direct Final Rule becomes effective any person may file objections and request for hearings on those objections. Objections and requests for hearing must be filed with 60 days of issuance of the final rule. For direct final rules, the date of issuance is considered to be the effective date. Objections and requests for hearings must be received on or before April 27, 2007, and must be filed in accordance with the instructions provided in 40 CFR part 178 (see also Unit I.C. of the **SUPPLEMENTARY INFORMATION**).

ADDRESSES: EPA has established a docket for this action under docket identification (ID) number EPA–HQ–OPP–2002–0043. All documents in the docket are listed in the index for the docket. Although listed in the index, some information is not publicly available, e.g., Confidential Business Information (CBI) or other information whose disclosure is restricted by statute. Certain other material, such as copyrighted material, is not placed on the Internet and will be publicly available only in hard copy form. Publicly available docket materials are available in the electronic docket at *http://www.regulations.gov*, or, if only availablein hard copy, at the OPP Regulatory Public Docket in Rm. S–4400, One Potomac Yard (South Building), 2777 S. Crystal Drive, Arlington, VA. The Docket Facility is open from 8:30 a.m. to 4 p.m., Monday through Friday, excluding legal holidays. The Docket telephone number is (703) 305–5805.

FOR FURTHER INFORMATION CONTACT: Stephen Schaible, Registration Division (7505P), Office of Pesticide Programs, Environmental Protection Agency, 1200 Pennsylvania Ave., NW., Washington, DC 20460–0001; telephone number: (703) 308–9362; e-mail address: schaible.stephen@epa.gov.

SUPPLEMENTARY INFORMATION:

I. General Information

A. Does this Action Apply to Me?

You may be potentially affected by this action if you are an agricultural producer, food manufacturer, or pesticide manufacturer. Potentially affected entities may include, but are not limited to:

- Crop production (NAICS 111), e.g., agricultural workers; greenhouse, nursery, and floriculture workers; farmers.
- Animal production (NAICS 112), e.g., cattle ranchers and farmers, dairy cattle farmers, livestock farmers.
- Food manufacturer (NAICS 311), e.g., agricultural workers; farmers; greenhouse, nursery, and floriculture workers; ranchers; pesticide applicators.
- Pesticide manufacturer (NAICS 32532), e.g., agricultural workers; commercial applicators; farmers; greenhouse, nursery, and floriculture workers; residential users.

This listing is not intended to be exhaustive, but rather provides a guide for readers regarding entities likely to be affected by this action. Other types of entities not listed in this unit could also be affected. The North American Industrial Classification System (NAICS) codes have been provided to assist you and others in determining whether this action might apply to certain entities. If you have any questions regarding the applicability of this action to a particular entity, consult the person listed under **FOR FURTHER INFORMATION CONTACT.**

B. How Can I Access Electronic Copies of this Document?

In addition to accessing an electronic copy of this **Federal Register** document through the electronic docket at *http://www.regulations.gov*, you may access this ''**Federal Register**'' document electronically through the EPA Internet under the ''**Federal Register**'' listings at *http://www.epa.gov/fedrgstr*. You may also access a frequently updated electronic version of 40 CFR part 180 through the Government Printing Office's pilot e-CFR site at http://www.gpoaccess.gov/ecfr. To access the OPPTS Harmonized Guidelines referenced in this document, go directly to the guidelines at *http://www.epa.gpo/opptsfrs/home/guidelin.htm.*

C. Can I File an Objection or Hearing Request?

Under section 408(g) of the FFDCA, as amended by the FQPA, any person may file an objection to any aspect of this regulation and may also request a hearing on those objections. The EPA procedural regulations which govern the submission of objections and requests for hearings appear in 40 CFR part 178. You must file your objection or request a hearing on this regulation in accordance with the instructions provided in 40 CFR part 178. To ensure proper receipt by EPA, you must identify docket ID number EPA–HQ–OPP–2002–0043 in the subject line on the first page of your submission. All requests must be in writing, and must be mailed or delivered to the Hearing Clerk on or before February 12, 2007.

In addition to filing an objection or hearing request with the Hearing Clerk as described in 40 CFR part 178, please submit a copy of the filing that does not contain any CBI for inclusion in the public docket that is described in **ADDRESSES**. Information not marked confidential pursuant to 40 CFR part 2 may be disclosed publicly by EPA without prior notice. Submit your copies, identified by docket ID number EPA–HQ–OPP–2002–0043, by one of the following methods.

- *Federal eRulemaking Portal*: *http://www.regulations.gov*. Follow the on-line instructions for submitting comments.
- *Mail*. Office of Pesticide Programs (OPP) Regulatory Public Docket (7502P), Environmental Protection Agency, 1200 Pennsylvania Ave., NW., Washington, DC 20460–0001.
- *Delivery*. OPP Regulatory Public Docket (7502P), Environmental Protection Agency, Rm. S–4400, One Potomac Yard (South Building), 2777 S. Crystal Drive, Arlington, VA. Deliveries are only accepted during the Docket's normal hours of operation (8:30 a.m. to 4 p.m., Monday through Friday, excluding legal holidays). Special arrangements should be made for deliveries of boxed information. The Docket telephone number is (703) 305–5805.

II. Background

EPA's Office of Pesticide Programs (OPP) has developed a commodity vocabulary data base entitled ''Food and Feed Commodity Vocabulary.'' The data base was developed to consolidate all the major OPP commodity vocabularies

into one standardized vocabulary. As a result, all future pesticide tolerances issued under 40 CFR part 180 will use the ''preferred commodity term'' as listed in the aforementioned data base. This is the fifth in a series of documents revising the terminology of commodity terms currently in tolerances in 40 CFR part 180. Final rules, revising pesticide tolerance nomenclature, were published in the **Federal Register** on June 19, 2002 (67 FR 41802) (FRL–6835–2); June 21, 2002 (67 FR 42392) (FRL–7180–1), on July 1, 2003(68 FR 39428) (FRL–7308–9), and (68 FR 39435) (FRL–7316–9).

A. What Action is the Agency Taking?

In this rule, EPA is making the following format changes to the terminology of the commodity terms in 40 CFR part 180 to the extent the terminology is not already in this format:

1. The first letter of the commodity term is capitalized. All other letters, including the first letter of proper names, are changed to lower case.

2. Commodity terms are listed in the singular although there are the following exceptions: ''leaves'', ''roots'', ''tops'', ''greens'', ''hulls'', ''vines'', ''fractions'', ''shoots'', and ''byproducts''.

3. Commodity terms are amended so that generic terms, such as ''corn'' and ''pea'', precede modifying terms, such as ''field'', ''dry'' and ''summer''.

4. Parentheses are replaced with commas. Example: ''Pea (succulent)'' is replaced with ''Pea, succulent''.

6. Crop group terms are revised to standardize with the ''Food and Feed Vocabulary''. Examples:

i. ''Brassica, leafy'' is replaced with ''Vegetable, brassica, leafy, group 5''.

ii. ''Fruit, citrus group is replaced with ''Fruit, citrus, group 10''.

iii. ''Leafy vegetables (except Brassica)'' is replaced with ''Vegetable, leafy, except brassica, group 4''.

iv. ''Vegetable, brassica, head and stem, subgroup 5a'' is replaced with ''Brassica, head and stem, subgroup 5A''.

v. ''Tree nut'' is replaced with ''Nut, tree, group 14''.

B. Additional Changes

In addition to format changes to the commodity terms, this document also includes many revisions to the commodity terms. These revisions replace certain commodity terms that are no longer used by EPA with the appropriate matching term in the ''Food and Feed Commodity Vocabulary''. For example, ''Alfalfa, fresh ' is replaced with ''Alfalfa, forage'', ''Barley, fodder'' is replaced with ''Barley, straw''. ''Bean, dried'' is replaced with ''Bean, dry, seed''. ''Cottonseed'' and ''Cotton seed'' are replaced with ''Cotton, undelinted seed''. ''Dry bulb onion'' is replaced with ''Onion, bulb''. ''Coffee bean'' is replaced with ''Coffee, bean, green''.

''Corn, sweet, kernal plus cob with husks removed''; ''Corn, sweet, kernel + cob with husks removed''; ''Corn sweet, kernels plus cob with husks removed''; ''Corn, fresh, kernel plus cob with husks removed''; ''Corn, fresh (including sweet), kernel plus cob with husks removed''; ''Corn, fresh (inc. sweet, kernel plus cob with husks removed)'' and ''Sweet corn, kernel plus cob with husks removed'' are replaced with the term ''Corn, sweet, kernel plus cob with husks removed''.

This document also deletes certain terms that are not needed to identify the tolerance commodities.

Examples:

i. The terms ''nutmeat'' and ''nutmeats'' when used in association with the tree nut crops or peanut are not needed. For tree nut crops, nutmeat and almond hulls are the only edible portions of the crop consumed. Therefore, OPP's Food and Feed Commodity Vocabulary uses the commodity terms ''Almond'', ''Pecan'', ''Walnut'', etc. for the tree nuts and the commodity term ''Peanut'' is used in place of ''Peanut, nutmeat''. Since ''almond hulls'' are fed to livestock, tolerances may be established for ''Almond, hulls''.

ii. The term ''Endive (escarole)'' is changed to ''Endive'' since the term ''Endive'' includes escarole.

iii. The term ''Blueberry (huckleberry)'' is changed to ''Blueberry'' since the term ''Blueberry'' includes huckleberries.

iv. The term ''Banana (whole)'' is changed to ''Banana'' since the ''Food and Feed Vocabulary'' uses the term ''Banana'' to refer to the whole banana.

III. Statutory and Executive Order Reviews

This final rule makes technical amendments to the Code of Federal Regulations which have no substantive impact on the underlying regulations, and it does not otherwise impose or amend any requirements. As such, the Office of Management and Budget (OMB) has determined that a technical amendment is not a ''significant regulatory action'' subject to review by OMB under Executive Order 12866, entitled *Regulatory Planning and Review* (58 FR 51735, October 4, 1993). Because this final rule has been exempted from review under Executive Order 12866 due to its lack of significance, this final rule is not subject to Executive Order 13211, *Actions Concerning Regulations That Significantly Affect Energy Supply, Distribution, or Use* (66 FR 28355, May 22, 2001). This final rule does not contain any information collections subject to OMB approval under the Paperwork Reduction Act (PRA), 44 U.S.C. 3501 et seq., or impose any enforceable duty or contain any unfunded mandate as described under Title II of the Unfunded Mandates Reform Act of 1995 (UMRA) (Public Law 104–4). Nor does it require any special considerations under Executive Order 12898, entitled *Federal Actions to Address Environmental Justice in Minority Populations and Low-Income Populations* (59 FR 7629, February 16, 1994); or OMB review or any Agency action under Executive Order 13045, entitled *Protection of Children from Environmental Health Risks and Safety Risks* (62 FR 19885, April 23, 1997). This action does not involve any technical standards that would require Agency consideration of voluntary consensus standards pursuant to section 12(d) of the National Technology Transfer and Advancement Act of 1995 (NTTAA), Public Law 104–113, section 12(d) (15 U.S.C. 272 note). The Regulatory Flexibility Act (RFA) (5 U.S.C. 601et seq.) generally requires an agency to prepare a regulatory flexibility analysis of any rule subject to notice and comment rulemaking requirements under the Administrative Procedure Act or any other statute unless the agency certifies that the rule will not have a significant impact on a substantial number of small entities. Small entities include small businesses, small organizations, and small governmental organizations. After considering the economic impacts of today's final rule on small entities, I certify that this action will not have a significant economic impact on a substantial number of small entities. This action proposes technical amendments to the Code of Federal Regulations which have no substantive impact on the underyling regulations. This technical amendment will not have any negative economic impact on any entities, including small entities. In addition, the Agency has determined that this action will not have a substantial direct effect on States, on the relationship between the national government and the States, or on the distribution of power and responsibilities among the various levels of government, as specified in Executive Order 13132, entitled Federalism (64 FR 43255, August 10, 1999).Executive Order 13132 requires EPA to develop an accountable process

to ensure ''meaningful and timely input by State and local officials in the development of regulatory policies that have federalism implications.'' ''Policies that have federalism implications'' is defined in the Executive Order to include regulations that have ''substantial direct effects on the States, on the relationship between the national government and the States, or on the distribution of power and responsibilities among the various levels of government.'' This final rule directly regulates growers, food processors, food handlers and food retailers, not States. This action does not alter the relationships or distribution of power and responsibilities established by Congress in the preemption provisions of section 408(n)(4) of the FFDCA. For these same reasons, the Agency has determined that this final rule does not have any ''tribal implications'' as described in Executive Order 13175, entitled Consultation and Coordination with Indian Tribal Governments (65 FR 67249, November 6, 2000). Executive Order 13175, requires EPA to develop an accountable process to ensure ''meaningful and timely input by tribal officials in the development of regulatory policies that have tribal implications.'' ''Policies that have tribal implications'' is defined in the Executive Order to include regulations that have ''substantial direct effects on one or more Indian tribes, on the relationship between the Federal Government and the Indian tribes, or on the distribution of power and responsibilities between the Federal Government andIndian tribes.'' This final rule will not have substantial direct effects on tribal governments, on the relationship between the Federal Government and Indian tribes, or on the distribution of power and responsibilities between the Federal Government and Indian tribes, as specified in Executive Order 13175. Thus, Executive Order 13175 does not apply to this final rule.

IV. Congressional Review Act

The Congressional Review Act, 5 U.S.C. 801 et seq., as added by the Small Business Regulatory Enforcement Fairness Act of 1996, generally provides that before a rule may take effect, the agency promulgating the rule must submit a rule report, which includes a copy of the rule, to each House of the Congress and to the Comptroller General of the United States. EPA will submit a report containing this rule and other required information to the U.S. Senate, the U.S. House of Representatives, and the Comptroller General of the United States prior to publication of this final rule in the **Federal Register**. This final rule is not a ''major rule'' as defined by 5 U.S.C. 804(2).

Lists of Subjects in 40 CFR Part 180

Environmental protection, Administrative practice and procedure,Agricultural commodities, Pesticides and pest, Reporting and recordkeeping requirements.

Dated: December 1, 2006.

James Jones,

Director, Office of Pesticide Programs.

■ Therefore, 40 CFR chapter I, part 180 is amended as follows:

PART 180—[AMENDED]

■ 1. The authority citation for part 180 continues to read as follows:

Authority: 21 U.S.C. 321(q), 346a and 371.

■ 2. Part 180, subpart C is amended as follows:

In Section	In Paragraph	Remove the term	Add in its place the term
180.103	(a) table	Blueberry (huckleberry)	Blueberry
180.103	(a) table	Cantaloups	Cantaloupe
180.103	(a) table	Onion, dry bulb	Onion, bulb
180.106	(a) table	Pea, field vines	Pea, field, vines
180.106	(a) table	Peppermint, hay	Peppermint, tops
180.106	(a) table	Trefoil, birdsfoot, forage	Trefoil, forage
180.106	(a) table	Trefoil, birdsfoot, hay	Trefoil, hay
180.110	(a) table	Bean (dry form)	Bean, dry, seed
180.110	(a) table	Endive (escarole)	Endive
180.110	(a) table	Sweet corn, kernel plus cob with husks removed	Corn, sweet, kernel plus cob with husks removed
180.111	(a)(1) table	Dates	Date
180.111	(a)(1) table	Flax seed	Flax, seed
180.111	(a)(1) table	Pecans	Pecan
180.111	(a)(1) table	Peanut, forage	Peanut, hay
180.111	(a)(1) table	Peavines	Pea, field, vines
180.111	(a)(1) table	Trefoil, birdsfoot, forage	Trefoil, forage
180.111	(a)(1) table	Trefoil, birdsfoot, hay	Trefoil, hay
180.114	(a) table	Blueberry (huckleberry)	Blueberry
180.117	table	Vegetables, leafy	Vegetable, leafy

In Section	In Paragraph	Remove the term	Add in its place the term
180.117	table	Vegetables, root crop	Vegetable, root
180.117	table	Vegetables, seed and pod	Vegetable, seed and pod
180.121	(a) table	Alfalfa, fresh	Alfalfa, forage
180.121	(a) (table	Almond, hull	Almond, hulls
180.121	(a) table	Bean, dried	Bean, dry, seed
180.121	(a) table	Cotton, seed	Cotton, undelinted seed
180.121	(a) table	Pea, field vines	Pea, field, vines
180.121	(e) table	Trefoil, birdsfoot, forage	Trefoil, forage
180.121	(e) table	Trefoil, birdsfoot, hay	Trefoil, hay
180.122	(a) table	Alfalfa, fresh	Alfalfa, forage
180.122	(a) table	Cotton, seed	Cotton, undelinted seed
180.142	(a)(3) table	Leafy vegetables	Vegetable, leafy
180.142	(a)(3) table	Root crop vegetables	Vegetable, root
180.142	(a)(3) table	Seed and pod vegetables	Vegetable, seed and pod
180.142	(a)(3) table	Small fruit	Fruit, small
180.142	(a)(12)(i) and (a)(13)(i)	Sugarcane molasses	Sugarcane, molasses
180.142	(a)(13)(iii) introductory text	potable water	water, potable
180.142	(b) introductory text and (b) table	Wild rice	Rice, wild, grain
180.154	(a) table	Trefoil, birdsfoot, hay	Trefoil, hay
180.163	(a) table	Bean (dry form)	Bean, dry, seed
180.163	(a) table	Cantaloups	Cantaloupe
180.163	(a) table	Pecans	Pecan
180.163	(a) table	Spearmint, hay	Spearmint, tops
180.169	(a)(1) table	Corn, fresh (including sweet), kernel plus cob with husks removed	Corn, sweet, kernel plus cob with husks removed
180.169	(a)(1) table	Endive (escarole)	Endive
180.169	(a)(1) table	Pecans	Pecan
180.169	(a)(1) table	Peavines	Pea, field, vines
180.169	(a)(1) table	Trefoil, birdsfoot, forage	Trefoil, forage
180.169	(a)(1) table	Trefoil, birdsfoot, hay	Trefoil, hay
180.172	(a) table	Pecans	Pecan
180.176	(b) table	Ginseng, root	Ginseng
180.182	(a)(1) table	Alfalfa, fresh	Alfalfa, forage
180.185	(a) table	Cantaloups	Cantaloupe
180.185	(a) table	Yams, true, tuber	Yam, true, tuber
180.200	(a)(1) table	Endive (escarole)	Endive
180.204	(a) table	Endive (escarole)	Endive

In Section	In Paragraph	Remove the term	Add in its place the term
180.204	(a) table	Pecans	Pecan
180.205	(a) table	Coffee bean	Coffee, bean, green
180.205	(a) table	Pea, field vines	Pea, field, vines
180.205	(a) table	Pea (succulent)	Pea, succulent
180.205	(a) Table	Small fruit	Fruit, small
180.205	(c) Table	Yams, true, tuber	Yam, true, tuber
180.206	(a) table	Coffee bean[1]	Coffee, bean, green[1]
180.208	(a) table	Trefoil, birdsfoot, forage	Trefoil, forage
180.208	(a) table	Trefoil, birdsfoot, hay	Trefoil, hay
180.213	(a)(1) table	Corn, fresh (inc. sweet, kernel plus cob with husks removed)	Corn, sweet, kernel plus cob with husks removed
180.213	(a)(1) table	Pecans	Pecan
180.215	(a)(1) table	Bean (dry)	Bean, dry, seed
180.215	(a)(1) table	Pea (succulent)	Pea, succulent
180.220	(a)(1) table	Corn, fresh, kernel plus cob with husks removed	Corn, sweet, kernel plus cob with husks removed
180.226	(a)(2)(i) table	Hop, dried cone	Hop, dried cones
180.226	(a)(2)(i) table	Vegetables, leafy	Vegetable, leafy
180.226	(a)(2)(i) table	Vegetables, seed and pod	Vegetable, seed and pod
180.227	(a)(1) table	Sugarcane molasses	Sugarcane, molasses
180.232	(a) table	Corn, sweet, kernel, plus cob with husks removed	Corn, sweet, kernel plus cob with husks removed
180.236	table	Pecans	Pecan
180.242	(a)(1) table	Bean (dry)	Bean, dry, seed
180.249	table	Corn, fresh, kernel plus cob with husks removed	Corn, sweet, kernel plus cob with husks removed
180.253	(a) table	Endive (escarole)	Endive
180.253	(a) table	Hop, dried cone[1]	Hop, dried cones[1]
180.253	(a) table	Pecans	Pecan
180.253	(a) table	Vegetables, root crop	Vegetable, root
180.254	(a) table	Alfalfa, fresh (of which no more than 5 ppm are carbamates)	Alfalfa, forage (of which no more than 5 ppm are carbamates)
180.254	(a) table	Coffee bean	Coffee, bean, green
180.258	(a) table	Corn, fresh, kernel plus cob with husks removed	Corn, sweet, kernel plus cob with husks removed
180.258	(a) table	Yams, true, tuber	Yam, true, tuber
180.259	(a) table	Hop, dried cone	Hop, dried cones
180.259	(a) table	Peanut, forage	Peanut, hay
180.261	(a) table	Pea, field vines	Pea, field, vines
180.262	(a) table	Corn, fresh, kernel plus cob with husks removed	Corn, sweet, kernel plus cob with husks removed

In Section	In Paragraph	Remove the term	Add in its place the term
180.269	(a) table	Bean (dry)	Bean, dry, seed
180.269	(a) table	Coffee bean	Coffee, bean, green
180.269	(a) table	Pecans	Pecan
180.274	(a)(1) table	Rice, polishings	Rice, polished rice
180.274	(a)(2) table	Rice, polishings	Rice, polished rice
180.275	(a)(1) table	Bean (dry)	Bean, dry, seed
180.275	(a)(1) table	Coffee bean	Coffee, bean, green
180.275	(a)(1) table	Parsnip, root	Parsnip, roots
180.275	(b) table	Ginseng, root	Ginseng
180.287	(a) table	Poultry meat byproducts	Poultry, meat byproducts
180.292	(a)(2) table	Oat, milled fractions (exc flour)	Oat, groats/rolled oats
180.292	(a)(3) table	Oat, milled fractions (exc flour)	Oat, groats/rolled oats
180.298	(a) table	Pecans	Pecan
180.300	(a) table	Coffee bean	Coffee, bean, green
180.303	(a)(1) table	Peppermint, hay	Peppermint, tops
180.303	(a)(1) table	Root crop vegetables	Vegetable, root
180.303	(a)(1) table	Spearmint, hay	Spearmint, tops
180.314	(a) table	Pea, field vines	Pea, field, vines
180.317	(a) table	Endive (escarole)	Endive
180.324	(a)(1) table	Grass, canary, annual, straw	Canarygrass, annual, hay
180.324	(a)(2)	Cotton gin byproducts	Cotton, gin byproducts
180.328	(a) table	Coffee bean	Coffee, bean, green
180.330	(a) table	Corn, fresh, kernel plus cob with husks removed	Corn, sweet, kernel plus cob with husks removed
180.339	(a) table	Grass, canary, annual, straw	Canarygrass, annual, hay
180.339	(a) table	Peavines	Pea, field, vines
180.339	(a) table	Vegetables, seed and pod	Vegetable, seed and pod
180.342	(a)(1) table	Corn, fresh (inc. sweet, kernel plus cob with husks removed)	Corn, sweet, kernel plus cob with husks removed
180.342	(a)(1) table	Tree nut	Nut, tree, group 14
180.342	(a)(2) table	Soybean forage	Soybean, forage
180.350	(a) table	Corn, fresh, kernel plus cob with husks removed	Corn, sweet, kernel plus cob with husks removed
180.356	(a) table	Hop, dried cone	Hop, dried cones
180.356	(a) table	Hop, vine	Hop, vines
180.356	(a) table	Pecans	Pecan
180.362	(a) table	Milk fat	Milk, fat
180.362	(a) table	Pecans	Pecan
180.368	(a)(1) table	Barley, fodder	Barley, straw

In Section	In Paragraph	Remove the term	Add in its place the term
180.368	(a)(1) table	Corn, fresh, kernel plus cob with husks removed	Corn, sweet, kernel plus cob with husks removed
180.368	(a)(3) table	Vegetable, brassica, head and stem, subgroup 5A	Brassica, head and stem, subgroup 5A
180.371	(a) table	Pecans	Pecan
180.378	(b) table	Alfalfa, fresh	Alfalfa, forage
180.378	(b) table	Leafy vegetables (except Brassica)	Vegetable, leafy, except brassica, group 4
180.378	(c) table	Milk fat (reflecting 0.25 ppm in whole milk)	Milk, fat (reflecting 0.25 ppm in whole milk)
180.379	(a)(1) table	Bean, dried	Bean, dry, seed
180.379	(a)(1) table	Caneberries	Caneberry subgroup 13A
180.379	(a)(1) table	Pecans	Pecan
180.381	(a) table	Dates	Date
180.399	(a)(1) table	Caneberries	Caneberry subgroup 13A
180.399	(a)(1) table	Ginseng, root	Ginseng
180.401	(b) table	Endive (escarole)	Endive
180.408	(a) table	Ginseng, root	Ginseng
180.408	(a) table	Hop, dried cone	Hop, dried cones
180.408	(a) table	Hop, viine	Hop, vines
180.408	(a) table	Soybean, grain	Soybean, seed
180.408	(d) table	Barley, fodder	Barley, straw
180.411	(a)(2) table	Pecans	Pecan
180.412	(a) table	Pea, field vines	Pea, field, vines
180.412	(a) table	Tree nut	Nut, tree, group 14
180.414	(a)(1) table	Leafy vegetables (except Brassica)	Vegetable, leafy, except brassica, group 4
180.414	(d) table	Corn, sweet, kernels plus cob with husks removed	Corn, sweet, kernel plus cob with husks removed
180.415	(a) table	Caneberries	Caneberry subgroup 13A
180.415	(a) table	Ginseng, root	Ginseng
180.415	(a) table	Hop, dried cone	Hop, dried cones
180.418	(a)(1) table	Brassica, leafy	Vegetable, brassica, leafy group 5
180.418	(a)(1) table	Pecans	Pecan
180.418	(a)(2) table	Brassica, leafy	Vegetable, brassica, leafy group 5
180.418	(a)(2) table	Pecans	Pecan
180.420	(c) table	Leafy vegetables	Vegetable, leafy
180.420	(c) table	Seed and pod vegetables	Vegetable, seed and pod
180.420	(c) table	Small fruit	Fruit, small
180.425	(a) table	Pea (succulent)	Pea, succulent
180.431	(a) table	Barley, forage	Barley, hay
180.434	(c) table	Rice, wild	Rice, wild, grain

In Section	In Paragraph	Remove the term	Add in its place the term
180.435	(a)(1) table	Almond hulls	Almond, hulls
180.435	(a)(1) table	Corn, sweet, kernel + cob with husks removed	Corn, sweet, kernel plus cob with husks removed
180.436	(a)(1) table	Cotton, seed	Cotton, undelinted seed
180.436	(a) (1) table	Hop, vine	Hop, vines
180.442	(a)(1) table	Hop, dried cone	Hop, dried cones
180.443	(a) table	Almond nutmeat	Almond
180.443	(a) table	Cotton seed	Cotton, undelinted seed
180.443	(a) table	Raisins	Grape, raisin
180.443	(b) table	Hop, dried cone	Hop, dried cones
180.449	(a) table	Cotton gin byproducts	Cotton, gin byproducts
180.449	(a) table	Cotton seed	Cotton, undelinted seed
180.449	(a) table	Hop, dried cone	Hop, dried cones
180.450	(a) table	Banana (whole)[1]	Banana[1]
180.450	(a) table	Corn, fresh (including sweet), kernel plus cob with husks removed	Corn, sweet, kernel plus cob with husks removed
180.457	Table	Banana (whole)	Banana
180.458	(a)(3) table	Leafy petioles subgroup 4B	Leaf petioles subgroup 4B
180.464	(a) table	Corn, sweet, kernal plus cob with husks removed	Corn, sweet, kernel plus cob with husks removed
180.464	(a) table	Tuberous and corm vegetables	Vegetable, tuberous and corm, subgroup 1C
180.467	Table	Almond nutmeat	Almond
180.470	Table	Soybean, grain	Soybean, seed
180.472	(a) table	Hop, dried cone	Hop, dried cones
180.472	(a) table	Pecans	Pecan
180.472	(d) table	Sweet corn, kernel plus cob with husks removed	Corn, sweet, kernel plus cob with husks removed
180.474	(b)(1) table	Sunflower, oil	Sunflower, refined oil
180.474	(b)(2) table	Eggs	Egg
180.478	(a) table	Potato, tubers	Potato
180.479	(a)(2) table	Corn, sweet, kernel + cob with husks removed	Corn, sweet, kernel plus cob with husks removed
180.479	(a)(2) table	Cotton, gin by-products	Cotton, gin byproducts
180.479	(a)(2) table	Vegetables, fruiting, group 8	Vegetable, fruiting, group 8
180.482	(a)(1) table	Citrus oil	Citrus, oil
180.482	(a)(1) table	Leafy petioles subgroup 4B	Leaf petioles subgroup 4B
180.484	(a)(1) table	Peanut hay	Peanut, hay
180.487	(a) table	Cotton gin byproducts	Cotton, gin byproducts
180.489	(a) table	Corn, sweet, kernels plus cob with husks removed (of which no more than 0.10 ppm is TMS)	Corn, sweet, kernel plus cob with husks removed (of which no more than 0.10 ppm is TMS)

In Section	In Paragraph	Remove the term	Add in its place the term
180.489	(a) table	Cotton, gin by-products (of which no more than 35 ppm is TMS)	Cotton, gin byproducts (of which no more than 35 ppm is TMS)
180.489	(a) Table	Fruit, citrus group	Fruit, citrus, group 10
180.490	(a)(1) table	Peanut nutmeat	Peanut
180.495	(a) table	Cotton gin byproducts	Cotton, gin byproducts
180.495	(a) table	Fruit, citrus group	Fruit, citrus, group 10
180.500	(a) table	Goats, fat	Goat, fat
180.500	(a) table	Goats, kidney	Goat, kidney
180.500	(a) table	Goats, meat	Goat, meat
180.500	(a) table	Horses, fat	Horse, fat
180.500	(a) table	Horses, meat	Horse, meat
180.505	(a)(1) table	Cotton, gin byproduct	Cotton, gin byproducts
180.506	(a) table	Cotton gin byproducts	Cotton, gin byproducts
180.507	(a)(1) table	Hops, dried cones	Hop, dried cones
180.507	(a)(1) table	Pecans	Pecan
180.507	(a)(1) table	Tree nut	Nut, tree, group 14
180.510	(a)(1) table	Black sapote	Sapote, black
180.510	(a)(1) table	Logan	Loganberry
180.510	(a)(1) table	Mamey sapote	Sapote, mamey
180.510	(a)(1) table	Tree nut	Nut, tree, group 14
180.511	(a) table	Black sapote	Sapote, black
180.511	(a) table	Fruit, pome, Crop Group 11	Fruit, pome, group 11
180.511	(a) table	Logan	Loganberry
180.511	(a) table	Mamey sapote	Sapote, mamey
180.513	(a)(1) table	Vegetables, fruiting, group 8	Vegetable, fruiting, group 8
180.515	(a) table	Almond, hull	Almond, hulls
180.515	(a) table	Hops, dried cones	Hop, dried cones
180.515	(a) table	Vegetable, cucurbit, group 09	Vegetable, cucurbit, group 9
180.515	(b) table	Hop, dried cone	Hop, dried cones
180.516	(a) table	Cotton gin byproducts	Cotton, gin byproducts
180.516	(a) table	Peanut hay	Peanut, hay
180.517	(a) table	Hog Meat	Hog, meat
180.517	(a) table	Poultry Meat Byproducts	Poultry, meat byproducts
180.518	(a)(1) table	Citrus oil	Citrus, oil
180.535	(a) table	Barley, forage	Barley, hay
180.543	(a) table	Peanut nutmeat	Peanut
180.544	(a)(1) table	Black sapote	Sapote, black
180.544	(a)(1) table	Corn, sweet, kernal plus cob with husks removed	Corn, sweet, kernel plus cob with husks removed

In Section	In Paragraph	Remove the term	Add in its place the term
180.544	(a)(1) table	Mamey sapote	Sapote, mamey
180.547	(a) table	Peanut hay	Peanut, hay
180.553	(a) table	Almond, hull	Almond, hulls
180.555	(a) table	Hop, dried cone	Hop, dried cones
180.555	(a) table	Peanut hay	Peanut, hay
180.555	(a) table	Potato, tubers	Potato
180.556	(a) table	Cotton gin byproducts	Cotton, gin byproducts
180.556	(a) table	Hop, dried cone	Hop, dried cones
180.556	(a) table	Pecans	Pecan
180.561	(a) table	Leafy vegetables	Vegetable, leafy
180.564	(a)(1) table	Cotton gin byproducts	Cotton, gin byproducts
180.565	(a) table	Corn, sweet, kernal plus cob with husks removed	Corn, sweet, kernel plus cob with husks removed
180.565	(a) table	Hog meat	Hog, meat
180.565	(a) table	Pecans	Pecan
180.565	(b) table	Bean, dried	Bean, dry, seed
180.568	(a) table	Cottonseed	Cotton, undelinted seed
180.572	(a)(1) table	Hop, dried cone	Hop, dried cones
180.575	(a)(1) table	Barley, pearled, postharvest	Barley, pearled barley, postharvest
180.575	(a)(1) table	Cocoa bean, postharvest	Cacao bean, roasted bean, postharvest
180.575	(a)(1) table	Corn pop, grain, postharvest	Corn, pop, grain, postharvest
180.575	(a)(1) table	Corn, aspirated grain fractions, postharvest	Grain, aspirated fractions, postharvest
180.575	(a)(1) table	Cottonseed, postharvest	Cotton, undelinted seed, postharvest
180.575	(a)(1) table	Eggs, dried	Egg, dried
180.575	(a)(1) table	Ham	Hog, meat
180.575	(a)(1) table	Herbs and spices, group 19, postharvest	Herbs and spices group 19, postharvest
180.575	(a)(1) table	Oat, rolled, postharvest	Oat, groats/rolled oats, postharvest
180.575	(a)(1) table	Rice, polished, postharvest	Rice, polished rice, postharvest
180.575	(a)(1) table	Vegetables, legume, group 6, postharvest	Vegetable, legume, group 6, postharvest
180.578	(a)(1) table	Fruit, citrus group	Fruit, citrus, group 10
180.578	(a)(1) table	Tuberous and corm vegetables	Vegetable, tuberous and corm, group 1
180.579	(a)(1) table	Vegetable, cucurbit, group 09	Vegetable, cucurbit, group 9
180.585	(a) table	Cotton, gin byproduct	Cotton, gin byproducts
180.589	(a)(1) table	Almond hulls	Almond, hulls
180.589	(a)(1) table	Vegetable, legume, succulent shelled pea and bean, subgroup 6B, except cowpea	Pea and bean, succulent shelled, subgroup 6B, except cowpea
180.589	(d) table	Flax seed	Flax, seed
180.592	(a)(2) table	Goats, kidney	Goat, kidney
180.592	(a)(2) table	Goats, liver	Goat, liver

In Section	In Paragraph	Remove the term	Add in its place the term
180.598	(a) table	Eggs	Egg
180.607	(a)(1) table	Vegetable, brassica, head and stem, subgroup 5A	Brassica, head and stem, subgroup 5A
180.608	(a)(1) table	Fruit, citrus, crop group 10	Fruit, citrus, group 10
180.608	(a)(1) table	Fruit, pome, crop group 11	Fruit, pome, group 11
180.608	(a)(1) table	Fruit, stone, crop group 12	Fruit, stone, group 12
180.608	(a)(1) table	Nut, tree, crop group 14	Nut, tree, group 14

■ 3. Section 180.123 is revised to read as follows:

§ 180.123 Inorganic bromide residues resulting from fumigation with methyl bromide; tolerances for residues.

(a) *General.* (1) Tolerances are established for residues of inorganic bromides (calculated as Br) in or on the following food commodities which have been fumigated with the antimicrobial agent and insecticide methyl bromide after harvest (with the exception of strawberry):

Commodity	Parts per million
Alfalfa, hay, postharvest	50.0
Almond, postharvest	200.0
Apple, postharvest	5.0
Apricot, postharvest	20.0
Artichoke, jerusalem, postharvest	30.0
Asparagus, postharvest	100.0
Avocado, postharvest	75.0
Barley, grain, postharvest	50.0
Bean, lima, postharvest	50.0
Bean, postharvest	50.0
Bean, snap, succulent, postharvest	50.0
Bean, succulent, postharvest	50.0
Beet, garden, roots, postharvest	30.0
Beet, sugar, roots, postharvest	30.0
Blueberry, postharvest	20.0
Butternut, postharvest	200.0
Cabbage, postharvest	50.0
Cantaloupe, postharvest	20.0
Carrot, roots, postharvest	30.0
Cashew, postharvest	200.0
Cherry, sweet, postharvest	20.0
Cherry, tart, postharvest	20
Chestnut, postharvest	200.0
Cippolini, bulb, postharvest	50.0
Citron, citrus, postharvest	30.0
Cacao bean, roasted bean, postharvest	50.0
Coconut, copra, postharvest	100.0
Coffee, bean, green, postharvest	75.0
Corn, field, grain, postharvest	50.0
Corn, pop, postharvest	240.0
Corn, sweet, kernel plus cob with husks removed, postharvest	50.0
Cotton, undelinted seed, postharvest	200.0
Cucumber, postharvest	30.0
Cumin, seed, postharvest	100.0
Eggplant, postharvest	20.0
Garlic, postharvest	50.0
Ginger, roots, postharvest	100.0
Grapefruit, postharvest	30.0
Grape, postharvest	20.0
Hazelnut, postharvest	200.0
Horseradish, postharvest	30.0
Kumquat, postharvest	30.0
Lemon, postharvest	30.0
Lime, postharvest	30.0
Mango, postharvest	20.0
Melon, honeydew, postharvest	20.0
Muskmelon, postharvest	20.0
Nectarine, postharvest	20.0
Nut, brazil, postharvest	200.0
Nut, hickory, postharvest	200.0
Nut, macadamia, postharvest	200.0
Oat, postharvest	50.0
Okra, postharvest	30.0
Onion, bulb, postharvest	20.0
Onion, green, postharvest	20.0
Orange, postharvest	30.0
Papaya, postharvest	20.0
Parsnip, roots, postharvest	30.0
Peach, postharvest	20.0
Peanut, postharvest	200.0
Pear, postharvest	5.0
Pea, blackeyed, postharvest	50.0
Pea, postharvest	50.0
Pecan, postharvest	200.0
Pepper, postharvest	30.0
Pimento, postharvest	30.0
Pineapple, postharvest	20.0
Pistachio, postharvest	200.0
Plum, postharvest	20.0
Pomegranate, postharvest	100.0
Potato, postharvest	75.0
Pumpkin, postharvest	20.0
Quince, postharvest	5.0
Radish, postharvest	30.0
Rice, grain, postharvest	50.0
Rutabaga, roots, postharvest	30.0
Rutabaga, tops, postharvest	30.0
Rye, grain, postharvest	50.0
Salsify, roots, postharvest	30.0
Sorghum, grain, grain, postharvest	50.0
Soybean, postharvest	200.0
Squash, summer, postharvest	30.0
Squash, winter, postharvest	20.0
Squash, zucchini, postharvest	20.0
Strawberry, postharvest	60.0
Sweet potato, postharvest	75.0
Tangerine, postharvest	30.0
Timothy, hay, postharvest	50.0
Tomato, postharvest	20.0
Turnip, roots, postharvest	30.0
Walnut, postharvest	200.0
Watermelon, postharvest	20.0
Wheat	50.0

(2) Inorganic bromide may be present as a residue in certain processed food in accordance with the following conditions:

(i) When inorganic bromide residues are present as a result of fumigation of the processed food with methyl bromide or from such fumigation in addition to the authorized use of methyl bromide on the source raw agricultural commodity, as provided for in this part, the total residues of inorganic bromides (calculated as Br) shall not exceed the following levels:

(A) 400 parts per million in or on egg, dried and herb, processed and spice.

(B) 325 parts per million in or on cheese, parmesan and cheese, roquefort cheese.

(C) 250 parts per million in or on tomato, concentrated products and fig, dried fruit.

(D) 125 parts per million in or on processed food other than those listed above.

(ii) When inorganic bromide residues are present in malt beverage, fermented in accordance with 21 CFR

172.730(a)(2), the amount shall not exceed 25 parts per million (calculated as Br).

(iii) Where tolerances are established on both the raw agricultural commodities and processed food made therefrom, the total residues of inorganic bromides in or on the processed food shall not be greater than those designated in paragraph (a)(2) of this section, unless a higher level is established elsewhere in this part.

(3) Tolerances are established for residues of inorganic bromides (calculated as Br) as follows:

(i) 400 parts per million for residues in or on dog food, resulting from fumigation with methyl bromide.

(ii) 125 parts per million for residues in or on processed commodities for animal feedstuffs from barley, corn, grain sorghum, oat, rice, rye and wheat, resulting directly from fumigation with methyl bromide or from carryover and concentration of residues of inorganic bromides from fumigation of the grains with methyl bromide.

(b) *Section 18 emergency exemptions.* [Reserved]

(c) *Tolerances with regional registrations.* A tolerance with regional registration, as defined in § 180.1(n), is established for residues of inorganic bromides (calculated as Br) in or on the following food commodity grown in soil fumigated with methyl bromide.

Commodity	Parts per million
Ginger, roots, postharvest	100

(d) *Indirect or inadvertent residues.* [Reserved]

■ 4. Section 180.127 is revised to read as follows:

§ 180.127 Piperonyl butoxide; tolerances for residues.

(a) *General.* (1) Tolerances for residues of the insecticide piperonyl butoxide [(butyl carbityl)(6-propyl piperonyl)ether] are established in or on the following food commodities:

Commodity	Parts per million
Almond, postharvest	8
Apple, postharvest	8
Barley, postharvest	20
Bean, postharvest	8
Birdseed, mixtures, postharvest	20
Blackberry, postharvest	8
Blueberry, postharvest	8
Boysenberry, postharvest	8
Buckwheat, grain, postharvest	20
Cattle, fat	0.1
Cattle, meat byproducts	0.1
Cattle, meat	0.1
Cherry, sweet, postharvest	8
Cherry, tart, postharvest	8
Cacoa bean, roasted bean, postharvest	8
Coconut, copra, postharvest	8
Corn, field, grain, postharvest	20
Corn, pop, postharvest	20
Cotton, undelinted seed, postharvest	8
Crabapple, postharvest	8
Currant, postharvest	8
Dewberry, postharvest	8
Egg	1
Fig, postharvest	8
Flax, seed, postharvest	8
Goat, fat	0.1
Goat, meat byproducts	0.1
Goat, meat	0.1
Gooseberry, postharvest	8
Grape, postharvest	8
Guava, postharvest	8
Hog, fat	0.1
Hog, meat byproducts	0.1
Hog, meat	0.1
Horse, fat	0.1
Horse, meat byproducts	0.1
Horse, meat	0.1
Loganberry, postharvest	8
Mango, postharvest	8
Milk, fat	0.25
Muskmelon, postharvest	8
Oat, postharvest	8
Orange, postharvest	8
Peach, postharvest	8
Peanut, postharvest	8
Pea, postharvest	8
Pear, postharvest	8
Pineapple, postharvest	8
Plum, prune, fresh, postharvest	8
Potato, postharvest	0.25
Poultry, fat	3
Poultry, meat byproducts	3
Poultry, meat	3
Raspberry, postharvest	8
Rice, postharvest	20
Rye, postharvest	20
Sheep, fat	0.1
Sheep, meat byproducts	0.1
Sheep, meat	0.1
Sorghum, grain, postharvest	8
Sweet potato, postharvest	0.25
Tomato, postharvest	8
Walnut, postharvest	8
Wheat, postharvest	20

(2) Piperonyl butoxide may be safely used in accordance with the following prescribed conditions:

(i) It is used or intended for use in combination with pyrethrins for control of insects:

(A) In cereal grain mills and in storage areas for milled cereal grain products, whereby the amount of piperonyl butoxide is at least equal to but not more than 10 times the amount of pyrethrins in the formulation.

(B) On the outer ply of multiwall paper bags of 50 pounds or more capacity in amounts not exceeding 60 milligrams per square foot, whereby the amount of piperonyl butoxide is equal to 10 times the amount of pyrethrins in the formulation. Such treated bags are to be used only for food, dried.

(C) On cotton bags of 50 pounds or more capacity in amounts not exceeding 55 milligrams per square foot of cloth, whereby the amount of piperonyl butoxide is equal to 10 times the amount of pyrethrins in the formulation. Such treated bags are constructed with waxed paper liners and are to be used only for food, dried that contain 4 percent fat or less.

(D) In two-ply bags consisting of cellophane/polyolefin sheets bound together by an adhesive layer when it is incorporated in the adhesive. The treated sheets shall contain not more than 50 milligrams of piperonyl butoxide per square foot (538 milligrams per square meter). Such treated bags are to be used only for packaging plum, prune, dried; grape, raisin; and other fruit, dried and are to have a maximum ratio of 3.12 milligrams of piperonyl butoxide per ounce of fruit (0.10 milligram of piperonyl butoxide per gram of product).

(E) In food processing and food storage areas: Provided, That the food is removed or covered prior to such use.

(ii) It is used or intended for use in combination with pyrethrins and N-octylbicycloheptene dicarboximide for insect control in accordance with 21 CFR 178.3730.

(iii) A tolerance of 10 parts per million is established for residues of piperonyl butoxide in or on:

(A) Grain, cereal, milled fractions when present therein as a result of its use in cereal grain mills and in storage areas for milled cereal grain products.

(B) Food, dried when present as a result of migration from its use on the outer ply of multiwall paper bags of 50 pounds or more capacity.

(C) Food treated in accordance with 21 CFR 178.3730.

(D) Food, dried that contain 4 percent fat, or less, when present as a result of migration from its use on the cloth of cotton bags of 50 pounds or more capacity constructed with waxed paper liners.

(E) Food treated in accordance with paragraph (a)(2)(i)(D) and (E) of this section.

(iv) To assure safe use of the pesticide, its label and labeling shall conform to that registered with the U.S. Environmental Protection Agency, and it shall be used in accordance with such label and labeling.

(v) Where tolerances are established on both raw agricultural commodities and processed food made therefrom, the total residues of piperonyl butoxide in or on the processed food shall not be greater than that permitted by the larger of the two tolerances.

(3) Piperonyl butoxide may be safely used in accordance with the following prescribed conditions:

(i) It is used or intended for use in combination with pyrethrins for control of insects:

(A) On the outer ply of multiwall paper bags of 50 pounds or more capacity in amounts not exceeding 60 milligrams per square foot.

(B) On cotton bags of 50 pounds or more capacity in amounts not exceeding 55 milligrams per square foot of cloth. Such treated bags are constructed with waxed paper liners and are to be used only for feed, dried that contain 4 percent fat or less.

(ii) It is used in combination with pyrethrins, whereby the amount of piperonyl butoxide is equal to 10 times the amount of pyrethrins in the formulation. Such treated bags are to be used only for feed, dried.

(iii) A tolerance of 10 parts per million is established for residues of piperonyl butoxide when present as the result of migration:

(A) In or on feed, dried from its use on the outer ply of multiwall paper bags of 50 pounds or more capacity.

(B) In or on feed, dried that contain 4 percent fat, or less, from its use on cotton bags of 50 pounds or more capacity constructed with waxed paper liners.

(iv) To assure safe use of the pesticide, its label and labeling shall conform to that registered with the U.S. Environmental Protection Agency.

(v) Where tolerances are established on both the raw agricultural commodities and food, processed made therefrom, the total residues of piperonyl butoxide in or on the processed food shall not be greater than that permitted by the larger of the two tolerances.

(b) *Section 18 emergency exemptions.* [Reserved]

(c) *Tolerances with regional registrations.* [Reserved]

(d) *Indirect or inadvertent residues.* [Reserved]

■ 5. Section 180.128 is revised to read as follows:

§ 180.128 Pyrethrins; tolerances for residues.

(a) *General.* (1) Tolerances for residues of the insecticide pyrethrins (insecticidally active principles of *Chrysanthemum cinerariaefolium*) are established in or on the following food commodities:

Commodity	Parts per million
Almond, postharvest	1
Apple, postharvest	1
Barley, postharvest	3
Bean, postharvest	1
Birdseed, mixtures, postharvest	3
Blackberry, postharvest	1
Blueberry, postharvest	1
Boysenberry, postharvest	1
Buckwheat, grain, postharvest	3
Cattle, fat	0.1(N)
Cattle, meat byproducts	0.1(N)
Cattle, meat	0.1(N)
Cherry, sweet, postharvest	1
Cherry, tart, postharvest	1
Cacao bean, roasted bean, postharvest	1
Coconut, copra, postharvest	1
Corn, field, grain, postharvest	3
Corn, pop, grain, postharvest	3
Cotton, undelinted seed, postharvest	1
Crabapple, postharvest	1
Currant, postharvest	1
Dewberry, postharvest	1
Egg	0.1(N)
Fig, postharvest	1
Flax, seed, postharvest	1
Goat, fat	0.1(N)
Goat, meat byproducts	0.1(N)
Goat, meat	0.1(N)
Gooseberry, postharvest	1
Grape, postharvest	1
Guava, postharvest	1
Hog, fat	0.1(N)
Hog, meat byproducts	0.1(N)
Hog, meat	0.1(N)
Horse, fat	0.1(N)
Horse, meat byproducts	0.1(N)
Horse, meat	0.1(N)
Loganberry, postharvest	1
Mango, postharvest	1
Milk, fat	0.5
Muskmelon, postharvest	1
Oat, grain, postharvest	1
Orange, postharvest	1
Peach, postharvest	1
Peanut, postharvest	1
Pea, postharvest	1
Pear, postharvest	1
Pineapple, postharvest	1
Plum, prune, fresh, postharvest	1
Potato, postharvest	0.05
Poultry, fat	0.2
Poultry, meat byproducts	0.2
Poultry, meat	0.2
Raspberry, postharvest	1
Rice, grain, postharvest	3
Rye, postharvest	3
Sheep, fat	0.1(N)
Sheep, meat byproducts	0.1(N)
Sheep, meat	0.1(N)
Sorghum, grain, grain, postharvest	1
Sweet potato, postharvest	0.05
Tomato, postharvest	1
Walnut, postharvest	1
Wheat, postharvest	3

(2) Pyrethrins may be safely used in accordance with the following prescribed conditions:

(i) It is used or intended for use in combination with piperonyl butoxide for control of insects:

(A) In cereal grain mills and in storage areas for milled cereal grain products, whereby the amount of pyrethrins is from 10 percent to 100 percent of the amount of piperonyl butoxide in the formulation.

(B) On the outer ply of multiwall paper bags of 50 pounds or more capacity in amounts not exceeding 6 milligrams per square foot, whereby the amount of pyrethrins is equal to 10 percent of the amount of piperonyl butoxide in the formulation. Such treated bags are to be used only for food, dried.

(C) On cotton bags of 50 pounds or more capacity in amounts not exceeding 5.5 milligrams per square foot of cloth, whereby the amount of pyrethrins is equal to 10 percent of the amount of piperonyl butoxide in the formulation. Such treated bags are constructed with waxed paper liners and are to be used only for food, dried that contain 4 percent fat or less.

(D) In two-ply bags consisting of cellophane/polyolefin sheets bound together by an adhesive layer when it is incorporated in the adhesive. The treated sheets shall contain not more than 10 milligrams of pyrethrins per square foot (107.6 milligrams per square meter). Such treated bags are to be used only for packaging plum, prune, dried; grape, raisin; and other fruit, dried, and are to have a maximum ratio of 0.31 milligram of pyrethrins per ounce of fruit (0.01 milligram of pyrethrins per gram of product).

(E) In food processing areas and food storage areas: *Provided,* That the food is removed or covered prior to such use.

(ii) It is used or intended for use in combination with piperonyl butoxide and *N*-octylbicycloheptene dicarboximide for insect control in accordance with § 180.367(a)(2).

(iii) A tolerance of 1 part per million is established for residues of pyrethrins in or on:

(A) Grain, cereal, milled fractions when present as a result of its use in cereal grain mills and in storage areas for grain, cereal, milled products.

(B) Food, dried when present as the result of migration from its use on the

outer ply of multiwall paper bags of 50 pounds or more capacity.

(C) Food treated in accordance with § 180.367(a)(2).

(D) Food, dried that contain 4 percent fat, or less, when present as a result of migration from its use on the cloth of cotton bags of 50 pounds or more capacity constructed with waxed paper liners.

(E) Food treated in accordance with paragraphs (a)(2)(i)(D) and (a)(2)(i)(E)) of this section.

(iv) To assure safe use of the pesticide, its label and labeling shall conform to that registered with the U.S. Environmental Protection Agency, and it shall be used in accordance with such label and labeling.

(v) Where tolerances are established on both the raw agricultural commodities and food, processed made therefrom, the total residues of pyrethrins in or on the food, processed shall not be greater than that permitted by the larger of the two tolerances.

(3) Pyrethrins may be safely used in accordance with the following prescribed conditions:

(i) It is used or intended for use in combination with piperonyl butoxide for control of insects:

(A) On the outer ply of multiwall paper bags of 50 pounds or more capacity in amounts not exceeding 6 milligrams per square foot.

(B) On cotton bags of 50 pounds or more capacity in amounts not exceeding 5.5 milligrams per square foot of cloth. Such treated bags are constructed with waxed paper liners and are to be used only for feed, dried that contain 4 percent fat or less.

(ii) It is used in combination with piperonyl butoxide, whereby the amount of pyrethrins is equal to 10 percent of the amount of piperonyl butoxide in the formulation. Such treated bags are to be used only for feed, dried.

(iii) A tolerance of 1 part per million is established for residues of pyrethrins when present as the result of migration:

(A) In or on feed, dried from its use on the outer ply of multiwall paper bags of 50 pounds or more capacity.

(B) In or on feed, dried that contain 4 percent fat, or less, from its use on cotton bags of 50 pounds or more capacity constructed with waxed paper liners.

(iv) To assure safe use of the pesticide, its label and labeling shall conform to that registered with the U.S. Environmental Protection Agency.

(v) Where tolerances are established on both raw agricultural commodities and food, processed made therefrom, the total residues of pyrethrins in or on the food, processed shall not be greater than that permitted by the larger of the two tolerances.

(b) *Section 18 emergency exemptions.* [Reserved]

(c) *Tolerances with regional registrations.* [Reserved]

(d) *Indirect or inadvertent residues.* [Reserved]

■ 6. Section 180.145 is revised to read as follows:

§ 180.145 Fluorine compounds; tolerances for residues.

(a) *General.* (1) Tolerances are established for combined residues of the insecticidal fluorine compounds cryolite and synthetic cryolite (sodium aluminum fluoride) in or on the following agricultural commodities:

Commodity	Parts per million
Apricot	7
Blackberry	7
Blueberry	7
Boysenberry	7
Broccoli	7
Brussels sprouts	7
Cabbage	7
Cauliflower	7
Collards	7
Cranberry	7
Cucumber	7
Dewberry	7
Eggplant	7
Fruit, citrus	7
Grape	7
Kale	7
Kohlrabi	7
Lettuce, head	7
Lettuce, leaf	7
Loganberry	7
Melon	7
Nectarine	7
Peach	7
Pepper	7
Plum, prune, fresh	7
Pumpkin	7
Raspberry	7
Squash, summer	7
Squash, winter	7
Strawberry	7
Tomato	7
Youngberry	7

(2) Time-limited tolerances are established for residues of the insecticidal fluorine compounds cryolite and synthetic cryolite (sodium aluminum fluoride) in or on the commodities as follows:

Commodity	Parts per million	Expiration/revocation date
Potato	2.0	11/21/2001
Potato, processed potato waste	22.0	11/21/2001

(3) Tolerances are established for residues of fluoride in or on the following commodities from the postharvest fumigation with sulfuryl fluoride for the control of insects:

Commodity	Parts per million
All processed food commodities not otherwise listed	70
Barley, bran, postharvest	45.0
Barley, flour, postharvest	45.0
Barley, grain, postharvest	15.0
Barley, pearled barley, postharvest	45.0
Cattle, meat, dried	40
Cheese	5.0
Cacao bean, roasted bean, postharvest	20
Coconut, postharvest	40
Coffee, bean, green, postharvest	15
Corn, field, flour, postharvest	35.0
Corn, field, grain, postharvest	10.0
Corn, field, grits, postharvest	10.0
Corn, field, meal, postharvest	30.0
Corn, pop, grain, postharvest	10.0
Cotton, undelinted seed, postharvest	70
Egg, dried	900
Fruit, dried , postharvest (other than raisin)	3.0
Ginger, postharvest	70
Grain, aspirated fractions, postharvest	55.0
Grape, raisin, postharvest	7.0
Hog, meat	20
Herbs and spices group 19, postharvest	70
Milk, powdered	5.0
Millet, grain, postharvest	40.0
Nut, pine, postharvest	20
Nut, tree, Group 14, postharvest	10.0
Oat, flour, postharvest	75.0
Oat, grain, postharvest	25.0
Oat, groats/rolled oats	75.0

Commodity	Parts per million
Peanut, postharvest	15
Pistachio, postharvest	10.0
Rice, bran, postharvest	31.0
Rice, flour, postharvest	45
Rice, grain, postharvest	12.0
Rice, hulls, postharvest	35.0
Rice, polished rice, postharvest	25.0
Rice, wild, grain, postharvest	25.0
Sorghum, grain, postharvest	40.0
Triticale, grain, postharvest	40.0
Vegetable, legume, group 6, postharvest	70
Wheat, bran, postharvest	40.0
Wheat, flour, postharvest	125.0
Wheat, germ, postharvest	130.0
Wheat, grain, postharvest	40.0
Wheat, milled byproducts, postharvest	130.0
Wheat, shorts, postharvest	40.0

(b) *Section 18 emergency exemptions.* [Reserved]

(c) *Tolerances with regional registrations.* Tolerances with regional registration, as defined by § 180.1(n), are established for the combined residues of the insecticidal fluorine compounds, cryolite and synthetic cryolite (sodium aluminum fluoride), in or on the following raw agricultural commodities:

Commodity	Parts per million
Kiwifruit	15

(d) *Indirect or inadvertent residues.* [Reserved]

■ 7. In § 180.206 in the table to paragraph (a) revise the entry for ''Coffee bean[1]'' and footnote 1 to read as follows:

§ 180.206 Phorate; tolerances for residues.

(a) * * *

Commodity	Parts per million
* * *	* *
Coffee, bean, green[1]	0.02
* * *	* *

[1]There are no U.S. registrations as of September 1, 1993 for coffe, bean, green.

* * * * *

■ 8. In § 180.225 by revising paragraph (a)(3) to read as follows:

§ 180.225 Phosphine; tolerances for residues.

(a) * * *

(3) Residues resulting from fumigation of processed food:

Commodity	Parts per million
Processed food	0.01

* * * * *

§ 180.268 [Removed]

■ 9. Remove § 180.268.

■ 10. In § 180.291 by revising paragraph (a) to read as follows:

§ 180.291 Pentachloronitrobenzene; tolerance for residues.

(a) A tolerance of 0.1 part per million is established for negligible residues of the fungicide pentachloronitrobenzene in or on the raw agricultural commodity cotton, undelinted seed.

* * * * *

■ 11. In § 180.293 by revising paragraph (a)(2) to read as follows:

§ 180.293 Endothall; tolerances for residues.

(a) * * *

(2) An interim tolerance of 0.2 parts per million is established for residues of the herbicide endothall (7 - oxabicyclo[2.2.1] heptane-2,3-dicarboxylic acid) in water, potable from use of its potassium, sodium, di-*N, N*-dimethylalkylamine, and mono-*N-N,*-dimethylalkylamine salts as algicides or herbicides to control aquatic plants in canals, lakes, ponds, and other potential sources of water, potable.

* * * * *

■ 12. Section 180.319 is revised to read as follows:

§ 180.319 Interim tolerances.

While petitions for tolerances for negligible residues are pending and until action is completed on these petitions, interim tolerances are established for residues of the listed pesticide chemicals in or on the following raw agricultural commodities:

Substances	Uses	Tolerance in parts per million	Raw agricultural commodity
Carbaryl (1-naphthyl N-methylcarbamate and its metabolite 1-naphthol, calculated as carbaryl.	Insecticide	0.5	Egg
Coordination product of zinc ion and maneb	Fungicide	1.0 (Calculated as zinc ethylenebisdithiocarbamate)	Potato
Endothall (7-oxabicyclo-(2,2,1) heptane 2,3-dicarboxylic acid).	Herbicide	0.2	Beet, sugar
Isopropyl carbanilate (IPC)	Herbicide	5.0	Alfalfa, hay; clover, hay; and grass, hay
		2.0	Alfalfa, forage; clover, forage; and grass, forage
		0.1	Flax, seed; lentil; lettuce, head and lettuce, leaf; pea; safflower, seed; spinach; and beet, sugar, roots and beet, sugar, tops
		0.5	Egg; cattle, fat; cattle meat; cattle, meat byproducts; goat, fat; goat, meat; goat, meat byproducts; hog, fat; hog, meat; hog, meat byproducts; horse, fat; horse, meat; horse, meat byproducts; milk; sheep, fat; sheep meat; sheep, meat byproducts; poultry, fat; poultry, meat; poultry, meat byproducts
Isopropyl m-chlorocarbanilate (CIPC).	Herbicide	0.05	Milk; cattle, fat; cattle, meat; cattle, meat byproducts; goat, fat; goat, meat; goat, meat byproducts; hog, fat; hog, meat; hog, meat byproducts; horse, fat; horse, meat; horse, meat byproducts; sheep, fat; sheep meat; sheep, meat byproducts

Substances	Uses	Tolerance in parts per million	Raw agricultural commodity
Parathion (O,O-diethyl-O-p-nitrophenythiophosphate) or its methyl homolog.	Herbicide	0.5	Rye
Pentachloronitrobenzene	Fungicide	1.0	Peanut
		0.1	Bean, broccoli, Brussels sprouts, cabbage, cauliflower, garlic, pepper, potato, and tomato

■ 13. Section 180.342 is amended by revising the introductory text of paragraph (a)(4) to read as follows:

§ 180.342 Chlorpyrifos; tolerances for residues.

(a) * * *

(4) A tolerance of 0.1 part per million is established for residues of chlorpyrifos, per se, in or on food commodities (other than those already covered by a higher tolerance as a result of use on growing crops) in food service establishments where food and food products are prepared and served, as a result of the application of chlorpyrifos in microencapsulated form.

* * * * *

§ 180.364 [Amended]

■ 14. In § 180.364, amend the table to paragraph (a) by removing the entry for ''Peanut, forage''.

■ 15. In § 180.379, paragraph (a)(2)(i) is revised to read as follows:

§ 180.379 Cyano(3-phenoxyphenyl)methyl-4-chloro-α-(1-methylethyl) benzeneacetate; tolerances for residues.

(a) * * *

(2) * * *

(i) In or on food commodities (other than those already covered by a higher tolerance as a result of use on growing crops) in food-handling establishments where food products are held, processed, or prepared.

* * * * *

§ 180.399 [Amended]

■ 16. In § 180.399, in the table to paragraph (a)(1) by removing the entry for ''Peanut hay''.

■ 17. In § 180.422, by revising paragraph (a)(2)(i) to read as follows:

§ 180.422 Tralomethrin; tolerances forresidues.

(a) * * *

(2) * * *

(i) In or on food commodities (other than those covered by a higher tolerance as a result of use on growing crops) in food-handling establishments.

* * * * *

■ 18. By revising § 180.438 to read as follows:

§ 180.438 Lambda-cyhalothrin and an isomer gamma-cyhalothrin; tolerances for residues.

(a) *General.* (1) Tolerances are established for the combined residues of the pyrethroid lambda-cyhalothrin, 1:1 mixture of (*S*)-α-cyano-3-phenoxybenzyl-(*Z*)-(1*R*,3*R*)-3-(2-chloro-3,3,3-trifluoroprop-1-enyl)-2,2-dimethyl cyclopropanecarboxylate and (*R*)-α-cyano-3-phenoxybenzyl-(*Z*)-(1*S*,3*S*)-3-(2-chloro-3,3,3-trifluoroprop-1-enyl)-2,2-dimethylcyclopropanecarboxylate and its epimer expressed as epimer of lambda-cyhalothrin, a 1:1 mixture of (*S*)-α-cyano-3-phenoxybenzyl-(*Z*)-(1*S*,3*S*)-3-(2-chloro-3,3,3-trifluoroprop-1-enyl)-2,2-dimethylcyclopropane carboxylate and (*R*)-α-cyano-3-phenoxybenzyl-(*Z*)-(1*R*,3*R*)-3-(2-chloro-3,3,3-trifluoroprop-1-enyl)-2,2-dimethyl cyclopropanecarboxylate, on plants and livestocks, as indicated in the following table.

Commodity	Parts per million
Alfalfa, forage	5.0
Alfalfa, hay	6.0
Almond, hulls	1.5
Apple, wet pomace	2.50
Avocado, imported	0.20
Brassica, head and stem, subgroup 5A	0.4
Canola, refined oil	2.0
Canola, seed	1.0
Cattle, fat	3.0
Cattle, meat	0.2
Cattle, meat byproducts	0.2
Corn, field, grain	0.05
Corn, field, grain, flour	0.15
Corn, field, forage	6.0
Corn, field, stover	1.0
Corn, pop, grain	0.05
Corn, pop, grain, flour	0.05
Corn, pop, stover	1.0
Corn, sweet, forage	6.0
Corn, sweet, stover	1.0
Corn, sweet, kernel plus cob with husks removed	0.05
Cotton, undelinted seed	0.05
Egg	0.01
Fruit, pome, group 11	0.30
Fruit, stone, group 12	0.50
Garlic	0.1
Goat, fat	3.0
Goat, meat	0.2
Goat, meat byproducts	0.2
Grain, aspirated fractions	2.0
Hog, fat	3.0
Hog, meat	0.2
Hog, meat byproducts	0.2
Hop, dried cones	10.0
Horse, fat	3.0
Horse, meat	0.2
Horse, meat byproducts	0.2
Lettuce, head	2.0
Lettuce, leaf	2.0
Milk, fat (reflecting 0.2 ppm in whole milk)	5.0
Nut, tree, group 14	0.05
Onion, bulb	0.1
Pea and bean, dried shelled, except soybean, subgroup 6C	0.10
Pea and bean, succulent shelled, subgroup 6B	0.01
Peanut	0.05
Peanut, hay	3.0
Poultry, fat	0.03
Poultry, meat	0.01
Poultry, meat byproducts	0.01
Rice, grain	1.0
Rice, hulls	5.0
Rice, straw	1.8
Sheep, fat	3.0
Sheep, meat	0.2
Sheep, meat byproducts	0.2
Soybean	0.01
Sorghum, grain, grain	0.2
Sorghum, grain, forage	0.30
Sorghum, grain, stover	0.50
Sugarcane, cane	0.05
Sunflower, forage	0.2
Sunflower, seed, hulls	0.50
Sunflower, refined oil	0.30
Sunflower, seed	0.2
Tomato	0.1
Tomato, dry pomace	6.0
Tomato, wet pomace	6.0
Vegetables, fruiting, group 8	0.20
Vegetables, legume, edible podded, subgroup 6A	0.20
Wheat, grain	0.05
Wheat, forage	2.0
Wheat, hay	2.0
Wheat, straw	2.0
Wheat, bran	0.2

(2) Tolerances[1] are established for the combined residues of the pyrethroid [gamma-cyhalothrin (the isolated active isomer of lambda-cyhalothrin) (*S*)-′-cyano-3-phenoxybenzyl (*Z*)-(1*R*,3*R*)-3-(2-chloro-3,3,3-trifluoroprop-1-enyl)-2,2-dimethylcyclopropanecarboxylate)) and its epimer (*R*)-′-cyano-3-phenoxybenzyl (*Z*)-(1*R*,3*R*)-3-(2-chloro-3,3,3-trifluoroprop-1-enyl)-2,2-dimethylcyclo

propanecarboxylate in/on the following commodities:

Commodity	Parts per million
Alfalfa, forage	5
Alfalfa, hay	6
Almond, hulls	1.5
Apple, wet pomace	2.50
Avocado, imported	0.20
Brassica, head and stem, subgroup 5A	0.4
Canola, seed	0.15
Cattle, fat	3
Cattle, meat	0.2
Cattle, meat byproducts	0.2
Corn, field, forage	6.0
Corn, field, grain	0.05
Corn, field, grain, flour	0.15
Corn, field, stover	1.0
Corn, pop, grain	0.05
Corn, pop, stover	1.0
Corn, sweet, forage	6.0
Corn, sweet, kernel plus cob with husks removed	0.05
Corn, sweet, stover	1.0
Cotton, undelinted seed	0.05
Egg	0.01
Fruit, pome, group 11	0.30
Fruit, stone, group 12	0.50
Garlic	0.10
Goat, fat	3.0
Goat, meat	0.2
Goat, meat byproducts	0.2
Grain, aspirated fractions	2.0
Hog, fat	3.0
Hog, meat	0.2
Hog, meat byproducts	0.2
Horse, fat	3.0
Horse, meat	0.2
Horse, meat byproducts	0.2
Lettuce, head	2.0
Lettuce, leaf	2.0
Milk, fat (reflecting 0.20 ppm in whole milk	5.0
Nut, tree, group 14	0.05
Onion, bulb	0.1
Pea and bean, dried shelled, except soybean, subgroup 6C	0.10
Pea and bean, succulent shelled, subgroup 6B	0.01
Peanut	0.05
Peanut, hay	3.0
Poultry, fat	0.03
Poultry, meat	0.01
Poultry, meat byproducts	0.01
Rice, grain	1.0
Rice, hulls	5.0
Rice, straw	1.8
Sheep, fat	3.0
Sheep, meat	0.2
Sheep, meat byproducts	0.2
Sorghum, grain, forage	0.30
Sorghum, grain, grain	0.20
Sorghum, grain, stover	0.50
Soybean	0.01
Sugarcane	0.05
Sunflower, forage	0.20
Sunflower, seed hulls	0.50
Sunflower, refined oil	0.30
Sunflower, seed	0.20
Tomato	0.10
Tomato, dry pomace	6.0
Tomato, wet pomace	6.0
Vegetables, fruiting, group 8	0.20
Vegetable, legume, edible podded, subgroup 6A	0.20
Wheat, grain	0.05
Wheat, forage	2.0
Wheat, hay	2.0
Wheat, straw	2.0
Wheat, bran	2.0

[1] The analytical enforcement methods for lambda-cyhalothrin are applicable for determination of gamma-cyhalothrin residues in plant and animal commodities.

(3) A food additive tolerance of 0.01 part per million is established for residues of the insecticide [1α(*S**),3α(*Z*)]-(±)-cyano(3-phenoxyphenyl)methyl 3-(2-chloro-3,3,3-trifluoro-1-propenyl)-2,2-dimethyl cyclopropanecarboxylate (lambda-cyhalothrin) as follows:

(i) In or on all food commodities (other than those already covered by a higher tolerance as a result of use on growing crops) in food-handling establishments where food products are held, processed, or prepared.

(ii) Application shall be limited solely to spot and/or crack and crevice treatment with a spray solution maximum of a 0.06-percent active ingredient by weight. Food must be removed or covered during treatment. Spray should not be applied directly to surfaces or utensils that may come into contact with food. Food-contact surfaces and equipment should be thoroughly cleaned with an effective cleaning compound and rinsed with potable water before using.

(iii) For spot treatment, a coarse low-pressure spray shall be used. Limit individual spot treatments to an area no larger than 20 percent of the surface area. Any individual spot treatment shall not exceed 2 square feet.

(iv) For crack and crevice treatment, equipment capable of delivering a pin-stream of spray directly into the cracks and crevices shall be used.

(v) To assure safe use of the additive, its label and labeling shall conform to that registered with the U.S. Environmental Protection Agency, and it shall be used in accordance with such label and labeling.

(b) *Section 18 emergency exemptions.* Time-limited tolerances are established for combined residues of the insecticide lambda-cyhalothrin (a 1:1 mixture of (*S*)-α-cyano-3-phenoxybenzyl-(*Z*)-(1*R*,3*R*)-3-(2-chloro-3,3,3-trifluoroprop-1-enyl)-2,2-dimethylcyclopropane carboxylate and (R)-α-cyano-3-phenoxybenzyl-(*Z*)-(1*S*,3*S*)-3-(2-chloro-3,3,3-trifluoroprop-1-enyl)-2,2-dimethyl cyclopropanecarboxylate and its epimer a 1:1 mixture of (*S*)-α-cyano-3-phenoxybenzyl-(*Z*)-(1*S*,3*S*)-3-(2-chloro-3,3,3-trifluoroprop-1-enyl)-2,2-dimethylcyclopropanecarboxylate and (*R*)-α-cyano-3-phenoxybenzyl -(*Z*)-(1*R*,3*R*)-3-(2-chloro-3,3,3-trifluoroprop-1-enyl)-2,2-dimethylcyclo-propane carboxylate in connection with use of the pesticide under section 18 emergency exemptions granted by EPA. The tolerances will expire and are revoked on the dates specified in the following table:

Commodity	Parts per million	Expiration/revocation date
Barley, bran	0.2	12/31/08
Barley, grain	0.05	12/31/08
Barley, hay	2.0	12/31/08
Barley, straw	2.0	12/31/08
Clover, forage	5.0	12/31/08
Clover, hay	6.0	12/31/08
Grass, forage	5.0	12/31/08
Grass, hay	6.0	12/31/08
Rice, wild, grain	1.0	12/31/08

(c) *Tolerances with regional registrations.* [Reserved]

(d) *Indirect or inadvertent residues.* [Reserved]

§ 180.484 [Amended]

■ 19. In § 180.484, in the table to paragraph (a)(1) by removing the entry for ''Sheep, milk.''

■ 20. In § 180.501, by revising the introductory text of paragraph (a) to read as follows:

§ 180.501 Hydroprene; tolerances for residues.

(a) *General.* A tolerance of 0.2 part per million is established for residues of hydroprene [(S)-(Ethyl (2E,4E,7S)-3,7,11-trimrthyl-2,4-dodecadienoate)], (CAS Reg. No. 65733–18–8) on food commodities in food-handling establishments in accordance with the following prescribed conditions:

* * * * *

■ 21. In § 180.519 by revising the introductory text of paragraph (a) to read as follows:

§ 180.519 Bromide ion and residual bromine; tolerances for residues.

(a) *General.* The food additives, bromide ion and residual bromine, may be present in water, potable in accordance with the following conditions:

* * * * *

■ 22. Section 180.522 is revised to read as follows:

§ 180.522 Fumigants for processed grains used in production of fermented malt beverage; tolerances for residues.

(a) *General*. Fumigants for processed grain may be safely used, in accordance with the following conditions.

(1) Methyl bromide. Total residues of inorganic bromides (calculated as Br) from the use of this fumigant shall not exceed 125 parts per milion.

(2) Methyl bromide is used to fumigate corn grits and cracked rice in the production of fermented malt beverage.

(3) To assure safe use of the fumigant, its label and labeling shall conform to the label and labeling registered by the U.S. Environmental Protection Agency, and the usage employed should conform with such label or labeling.

(4) The total residue of inorganic bromides in fermented malt beverage, resulting from the use of corn grits and cracked rice fumigated with the fumigant described in paragraph (a)(2) of this section plus additional residues of inorganic bromides that may be present from uses in accordance with other regulations in this chapter promulgated under section 408 and/or 409 of the Act, does not exceed 25 parts per million bromide (calculated as Br).

(b) *Section 18 emergency exemptions*. [Reserved]

(c) *Tolerances with regional registrations*. [Reserved]

(d) *Indirect or inadvertent residues*. [Reserved]

■ 23. Section 180.525 is revised to read as follows:

§ 180.525 Resmethrin; tolerances for residues.

(a) *General*. Tolerances are established for residues of the insecticide resmethrin [5-(phenylmethyl)-3-furanyl] methyl 2,2-dimethyl-3-(2-methyl-1-propenyl) cyclopropanecarboxylate in or on food commodities at 3.0 ppm resulting from use of the insecticide in food handling and storage areas as a space concentration for spot/or crack and crevice treatment and shall be limited to a maximum of 3.00 percent of the active ingredient by weight, and as a space treatment shall be limited to a maximum of 0.5 fluid ounce of 3.0 percent active ingredient by weight per 1000 cubic feet of space provided that the food is removed or covered prior to such use. To assure safe use of the additive, its label and labeling shall conform to that registered with the U.S. Environmental Protection Agency, and shall be used in accordance with such label and labeling.

(b) *Section 18 emergency exemptions*. [Reserved]

(c) *Tolerances with regional registrations*. [Reserved]

(d) *Indirect or inadvertent residues*. [Reserved]

■ 24. By revising § 180.538 to read as follows:

§ 180.538 Copper; tolerances for residues.

(a) *General*. A tolerance of 1 part per million is established in water, potable for residues of copper resulting from the use of the algicides or herbicides basic copper carbonate (malachite), copper sulfate, copper monoethanolamine, and copper triethanolamine to control aquatic plants in reservoirs, lakes, ponds, irrigation ditches, and other potential sources of potable water.

(b) *Section 18 emergency exemptions*. [Reserved]

(c) *Tolerances with regional registrations*. [Reserved]

(d) *Indirect or inadvertent residues*. [Reserved]

■ 25. In § 180.545 paragraph (a)(2) is revised to read as follows:

§ 180.545 Prallethrin (RS)-2-methyl-4-oxo-3-(2-propynyl)cyclopent-2-enyl (1RS)-cis, trans-chrysanthemate; tolerances for residues.

(a) * * *

(2) In or on food commodities in food handling establishments where food and food products are held, processed, prepared and/or served.

* * * * *

[FR Doc. E6–21025 Filed 12–12–06; 8:45 am]

BILLING CODE 6560–50–S

FEDERAL COMMUNICATIONS COMMISSION

47 CFR Part 64

[CG Docket No. 02–386; FCC 06–134]

Rules and Regulations Implementing Minimum Customer Account Record Exchange Obligations on All Local and Interexchange Carriers

AGENCY: Federal Communications Commission.

ACTION: Final rule.

SUMMARY: In this document, the Commission adopts minor modifications of the Commission's customer account record exchange (CARE) rules. The Commission concluded that minor modifications to its rules are needed to clarify carriers' respective obligations under that section in order to ensure accurate billing of end user customers, and to execute end user customer requests in a timely manner.

DATES: The rules in this document contain information collection requirements that have not been approved by the Office of Management and Budget (OMB). The Commission will publish a document in the **Federal Register** announcing the effective date for these rules. Written comments by the public on the new and modified information collections are due February 12, 2007.

ADDRESSES: Federal Communications Commission, 445 12th Street, SW., Washington, DC 20554.

FOR FURTHER INFORMATION CONTACT: David Marks, Consumer & Governmental Affairs Bureau at (202) 418–0347 (voice), or e-mail *David.Marks@fcc.gov.*

SUPPLEMENTARY INFORMATION: On February 25, 2005, the Commission released a Report and Order and Further Notice of Proposed Rulemaking (*Report and Order*), *Rules and Regulations Implementing Minimum Customer Account Record Exchange Obligations on All Local and Interexchange Carriers,* published at 70 FR 32258, June 2, 2005 in which it established mandatory, minimum standards governing the exchange of customer account information between local exchange carriers (LECs) and interexchange carriers (IXCs). On August 9, 2005, the Commission released a public notice requesting comment on proposed clarifications and modifications to the rules (*see* Consumer & Governmental Affairs Bureau Seeks Comment on Proposed Modifications/Clarifications to Rules Governing the Exchange of Customer Account Information Between Local and Long Distance Carriers, CG Docket No. 02–386, Public Notice, DA 05–2266, 70 FR 53137 (Sept. 7, 2005) (*Public Notice*)). This is a summary of the Commission's *Order on Reconsideration,* CG Docket No. 02–386, FCC 06–134, adopted September 6, 2003, and released September 13, 2006.

This document contains new information collection requirements subject to the PRA of 1995, Public Law 104–13. These requirements will be submitted to OMB for review under section 3507(d) of the PRA. OMB, the general public, and other Federal agencies are invited to comment on the new information collection requirements contained in this proceeding. In addition to filing comments with the Secretary, a copy of any comments on the Paperwork Reduction Act (PRA) information collection requirements contained herein should be submitted to Leslie Smith, Federal Communications Commission, Room 1–C216, 445 12th

Street, SW., Washington, DC 20554, or via the Internet to *Leslie.Smith@fcc.gov,* and to Allison E. Zaleski, OMB Desk Officer, Room 10236 NEOB, 725 17th Street, NW., Washington, DC 20503, via the Internet to *Allison E. Zaleski@omb.eop.gov* or via fax at (202) 395–6466.

Copies of any subsequently filed documents in this matter will be available for public inspection and copying during regular business hours at the FCC Reference Information Center, Portals II, 445 12th Street, SW., Room CY–A257, Washington, DC 20554. The complete text of this document may be purchased from the Commission's duplicating contractor, Best Copy and Printing, at Portals II, 445 12th Street, SW., Room CY–B402, Washington, DC 20554. Customers may contact the Commission's duplicating contractor at its Web site: *http://www.bcpiweb.com* or call 1–800–378–3160. To request materials in accessible formats for people with disabilities (Braille, large print, electronic files, audio format), send an e-mail to *fcc504@fcc.gov* or call the Consumer & Governmental Affairs Bureau at (202) 418–0530 (voice) or (202) 418–0432 (TTY).

Paperwork Reduction Act of 1995 Analysis

This document contains new information collection requirements. The Commission, as part of its continuing effort to reduce paperwork burdens, invites the general public to comment on the information collection requirements contained in the *Order on Reconsideration* as required by the Paperwork Reduction Act (PRA) of 1995, Public Law 104–13. Public and agency comments are due February 12, 2007. In addition, the Commission notes that pursuant to the Small Business Paperwork Relief Act of 2002, Public Law 107–198, *see* 44 U.S.C. 3506(c)(4), the Commission previously sought specific comment on how the Commission might ''further reduce the information collection burden for small business concerns with fewer than 25 employees.'' In the present document, the Commission undertook to minimize the burden of the new rules on small businesses and small entities. For example, the rules adopted here do not require the use of particular CARE codes for the exchange of customer account information. The Commission also does not adopt specific performance measurements for the timeliness and completeness of the transfer of customer account information between LECs and IXCs. Finally, the Commission notes that carriers subject to these requirements may use a variety of transmission mediums (*e.g.,* facsimile, mail, electronic mail, cartridge) for the required information exchanges. These measures should substantially alleviate any burdens on businesses with fewer than 25 employees.

Synopsis

In this *Order on Reconsideration,* the Commission concludes that minor modifications to § 64.4002 are needed to clarify carriers' respective obligations under that rule section. Section 64.4002(d) is modified to require that a LEC notify an IXC when the LEC has removed at its local switch a presubscribed customer of the IXC in connection with the customer's selection of ''no-PIC'' status. In this context, the selection of ''no-PIC'' status by the customer refers to the selection of no carrier for interLATA service or no carrier for intraLATA service. The Commission concludes that this modification is needed to ensure that an IXC does not continue billing a customer for non-usage-related monthly charges where that customer has contacted his current LEC or his current IXC to select ''no-PIC'' status.

Section 64.4002(e) of the Commission's rules is modified to include the effective date of any changes to a customer's local service account and the carrier identification code of the customer's IXC among the categories of information that must be provided to the IXC by the LEC. The Commission concludes that knowing the effective date of account changes will help IXCs to maintain accurate customer account information and that including the carrier identification code of the customer's IXC will enable an IXC to verify that it is the proper recipient of the transmitted information.

Section 64.4002(g) of the Commission's rules is modified to make the information categories included in § 64.4002(g) consistent with those included in other LEC notification requirements.

Section 64.4002(g) also is modified to require that when a customer changes LECs, but wishes to retain his current PIC, the new LEC must so notify the current PIC so that the current PIC does not erroneously assume, absent additional notification from the new LEC, that the customer also wishes to cancel his current PIC.

Sections 64.4002(a)(6), (b)(6), (d)(5) and (f)(5) of the Commission's rules are modified to substitute the phrase ''carrier identification code of the IXC'' for the phrase ''carrier identification code of the submitting LEC.'' This ''mirroring'' of information back to the IXC by the LEC serves as a ''handshake'' and is needed to confirm that the LEC has properly identified the intended recipient of a particular notification.

Final Regulatory Flexibility Certification

The Regulatory Flexibility Act of 1980, as amended (RFA), requires that a regulatory flexibility analysis be prepared for notice-and-comment rulemaking proceedings, unless the agency certifies that ''the rule will not, if promulgated, have a significant economic impact on a substantial number of small entities.'' The RFA generally defines the term ''small entity'' as having the same meaning as the terms ''small business,'' ''small organization,'' and ''small governmental jurisdiction.'' In addition, the term ''small business'' has the same meaning as the term ''small business concern'' under the Small Business Act. A ''small business concern'' is one which: (1) Is independently owned and operated; (2) is not dominant in its field of operation; and (3) satisfies any additional criteria established by the Small Business Administration (SBA).

On August 9, 2005, the Commission released a Public Notice seeking comment on the Coalition's proposed clarifications and modifications to § 64.4002 of the Commission's rules. This *Order on Reconsideration* adopts clarifications and modifications that are in the nature of technical corrections to the Commission's customer account record exchange rules that do not have a significant economic impact on entities subject to those rules. First, our modification to § 64.4002(d) makes this provision consistent with similar notification requirements adopted in the CARE *Order* simply by requiring a LEC to confirm its receipt of a particular IXC-initiated notification with an appropriate response. Similarly, we adopt modifications to §§ 64.4002(e) and (g) to include within the information exchanges prescribed by those section, the same standard categories of information that carriers routinely must provide in connection with other notification obligations adopted in the CARE *Order.* Changing these two sections to parallel other sections of the Commission's CARE rules simplifies and, thereby, reduces the compliance burden. Lastly, we modify §§ 64.4002(a)(6), (b)(6), (d)(5) and (f)(5) to change the phrase ''carrier identification code of the submitting LEC'' to read ''carrier identification code of the submitting IXC.'' This change adds no additional compliance burden. The Commission believes that the compliance burden, and resulting

economic impact on entities subject thereto, will be *de minimis*.

Therefore, we certify for purposes of the RFA that the clarifications and modifications we adopt in this *Order on Reconsideration* will not have a significant economic impact on a substantial number of small entities.

The Commission will send a copy of the *Order on Reconsideration,* including a copy of this Final Regulatory Flexibility Certification (*FRFC*), to the Chief Counsel for Advocacy of the SBA. This final certification will also be published in the **Federal Register**.

Congressional Review Act

The Commission will send a copy of the *Order on Reconsideration,* including the FRFC, in a report to be sent to Congress and the Comptroller General pursuant to the Congressional Review Act. In addition, the Commission will send a copy of the *Order on Reconsideration,* including this *FRFC,* to the Chief Counsel for Advocacy of the Small Business Administration. A copy of the *Order on Reconsideration* and *FRFC* (or summaries thereof) will also be published in the **Federal Register**. (*See* 5 U.S.C. 604(b)).

Ordering Clauses

Pursuant to the authority contained in sections 1–4, 201, 202, 222, 258, and 303(r) of the Communications Act of 1934, as amended; 47 U.S.C. 151–154, 201, 202, 222, 258, and 303(r), the Order on Reconsideration Is Adopted.

Pursuant to the authority contained in sections 1–4, 201, 202, 222, 258, and 303(r) of the Communications Act of 1934, as amended; 47 U.S.C. 151–154, 201, 202, 222, 258, and 303(r), part 64 of the Commission's rules, 47 CFR part 64, Is Amended as set forth below.

Because many of the rules and requirements contained in this *Order on Reconsideration* and as set forth below contain information collection requirements under the PRA, the rules and requirements Shall Not Become Effective until the information collection requirements have been approved by OMB. The Commission will publish a document in the **Federal Register** announcing the effective date of these rules.

Pursuant to the authority contained in sections 1–4, 201, 202, 222, 258, and 303(r) of the Communications Act of 1934, as amended; 47 U.S.C. 151–154, 201, 202, 222, 258, and 303(r), and § 1.407 of the Commission's rules, 47 CFR 1.407, the Request for Modification filed by AT&T Corp, BellSouth Corporation, Sprint Corporation, Qwest Communications International Inc., and VerizonCommunications, Inc. on April 15, 2005, and June 15, 2005, is granted in part and denied in part, to the extent provided herein.

List of Subjects in 47 CFR Part 64

Reporting and recordkeeping requirements, telecommunications, telephone.

Federal Communications Commission.

Marlene H. Dortch,

Secretary.

Rule Changes

■ For the reasons discussed in the preamble, the Federal Communications Commission amends 47 CFR part 64 as follows:

PART 64—MISCELLANEOUS RULES RELATING TO COMMON CARRIERS

■ 1. The authority citation continues to read as follows:

Authority: 47 U.S.C. 154, 254(k); secs. 403(b)(2)(B), (c), Pub. L. 104–104, 110 Stat. 56. Interpret or apply 47 U.S.C. 201, 218, 222, 225, 226, 228, and 254(k) unless otherwise noted.

■ 2. Section 64.4002 is revised to read as follows:

§ 64.4002 Notification obligations of LECs.

To the extent that the information is reasonably available to a LEC, the LEC shall provide to an IXC the customer account information described in this section consistent with § 64.4004. Nothing in this section shall prevent a LEC from providing additional customer account information to an IXC to the extent that such additional information is necessary for billing purposes or to properly execute a customer's PIC order.

(a) *Customer-submitted PIC order.* Upon receiving and processing a PIC selection submitted by a customer and placing the customer on the network of the customer's preferred interexchange carrier at the LEC's local switch, the LEC must notify the IXC of this event. The notification provided by the LEC to the IXC must contain all of the customer account information necessary to allow for proper billing of the customer by the IXC including but not limited to:

(1) The customer's billing telephone number, working telephone number, and billing name and address;

(2) The effective date of the PIC change;

(3) A statement describing the customer type (i.e., business or residential);

(4) A statement indicating, to the extent appropriate, that the customer's telephone service listing is not printed in a directory and is not available from directory assistance or is not printed in a directory but is available from directory assistance;

(5) The jurisdictional scope of the PIC installation (i.e., intraLATA and/or interLATA and/or international);

(6) The carrier identification code of the IXC; and

(7) If relevant, a statement indicating that the customer's account is subject to a PIC freeze. The notification also must contain information, if relevant and to the extent that it is available, reflecting the fact that a customer's PIC selection was the result of:

(i) A move (an end user customer has moved from one location to another within a LEC's service territory);

(ii) A change in responsible billing party; or

(iii) The resolution of a PIC dispute.

(b) *Confirmation of IXC-submitted PIC order.* When a LEC has placed a customer on an IXC's network at the local switch in response to an IXC-submitted PIC order, the LEC must send a confirmation to the submitting IXC. The confirmation provided by the LEC to the IXC must include:

(1) The customer's billing telephone number, working telephone number, and billing name and address;

(2) The effective date of the PIC change;

(3) A statement describing the customer type (i.e., business or residential);

(4) A statement indicating, to the extent appropriate, if the customer's telephone service listing is not printed in a directory and is not available from directory assistance, or is not printed in a directory but is available from directory assistance;

(5) The jurisdictional scope of the PIC installation (i.e., intraLATA and/or interLATA and/or international); and

(6) The carrier identification code of the IXC. If the PIC order at issue originally was submitted by an underlying IXC on behalf of a toll reseller, the confirmation provided by the LEC to the IXC must indicate, to the extent that this information is known, a statement indicating that the customer's PIC is a toll reseller.

(c) *Rejection of IXC-submitted PIC order.* When a LEC rejects or otherwise does not act upon a PIC order submitted to it by an IXC, the LEC must notify the IXC and provide the reason(s) why the PIC order could not be processed. The notification provided by the LEC to the IXC must state that it has rejected the IXC-submitted PIC order and specify the reason(s) for the rejection (e.g., due to a lack of information, incorrect information, or a PIC freeze on the customer's account). The notification must contain the identical data elements

that were provided to the LEC in the original IXC-submitted PIC order (i.e., mirror image of the original order), unless otherwise specified by this paragraph. If a LEC rejects an IXC-submitted PIC order for a multi-line account (i.e., the customer has selected the IXC as his PIC for two or more lines or terminals associated with his billing telephone number), the notification provided by the LEC rejecting that order must explain the effect of the rejection with respect to each line (working telephone number or terminal) associated with the customer's billing telephone number. A LEC is not required to generate a line-specific or terminal-specific response, however, and may communicate the rejection at the billing telephone level, when the LEC is unable to process an entire order, including all working telephone numbers and terminals associated with a particular billing telephone number. In addition, the notification must indicate the jurisdictional scope of the PIC order rejection (i.e., intraLATA and/or interLATA and/or international). If a LEC rejects a PIC order because:

(1) The customer's telephone number has been ported to another LEC; or

(2) The customer has otherwise changed local service providers, the LEC must include in its notification, to the extent that it is available, the identity of the customer's new LEC.

(d) *Customer contacts LEC or new IXC to change PIC(s) or customer contacts LEC or current IXC to change PIC to No-PIC.* When a LEC has removed at its local switch a presubscribed customer from an IXC's network in response to a customer order, upon receipt of a properly verified PIC order submitted by another IXC, or in response to a notification from the customer's current IXC relating to the customer's request to change his or her PIC to No-PIC, the LEC must notify the customer's former IXC of this event. The LEC must provide to the IXC the customer account information that is necessary to allow for proper final billing of the customer by the IXC including but not limited to:

(1) The customer's billing telephone number, working telephone number, and billing name and address;

(2) The effective date of the PIC change;

(3) A description of the customer type (i.e., business or residential);

(4) The jurisdictional scope of the lines or terminals affected (i.e., intraLATA and/or interLATA and/or international); and

(5) The carrier identification code of the IXC. If a customer changes PICs but retains the same LEC, the LEC is responsible for notifying both the old PIC and new PIC of the PIC change. The notification also must contain information, if relevant and to the extent that it is available, reflecting the fact that a customer's PIC removal was the result of:

(i) The customer moving from one location to another within the LEC's service territory, but where there is no change in local service provider;

(ii) A change of responsible party on an account; or

(iii) A disputed PIC selection.

(e) *Particular changes to customer's local service account.* When, according to a LEC's records, certain account or line information changes occur on a presubscribed customer's account, the LEC must communicate this information to the customer's PIC. For purposes of this paragraph, the LEC must provide to the appropriate IXC account change information that is necessary for the IXC to issue timely and accurate bills to its customers including but not limited to:

(1) The customer's billing telephone number, working telephone number, and billing name and address;

(2) The customer code assigned to that customer by the LEC;

(3) The type of customer account (i.e., business or residential);

(4) The status of the customer's telephone service listing, to the extent appropriate, as not printed in a directory and not available from directory assistance, or not printed in a directory but available from directory assistance; and

(5) The jurisdictional scope of the PIC installation (i.e., intraLATA and/or interLATA and/or international);

(6) The effective date of any change to a customer's local service account; and

(7) The carrier identification code of the IXC. If there are changes to the customer's billing or working telephone number, customer code, or customer type, the LEC must supply both the old and new information for each of these categories.

(f) *Local service disconnection.* Upon receipt of an end user customer's request to terminate his entire local service account or disconnect one or more lines (but not all lines) of a multi-line account, the LEC must notify the PIC(s) for the billing telephone number or working telephone number on the account of the account termination or lines disconnected. In conjunction with this notification requirement, the LEC must provide to a customer's PIC(s) all account termination or single/multi-line disconnection change information necessary for the PIC(s) to maintain accurate billing and PIC records, including but not limited to:

(1) The effective date of the termination/disconnection; and

(2) The customer's working and billing telephone numbers and billing name and address;

(3) The type of customer account (i.e., business or residential);

(4) The jurisdictional scope of the PIC installation (i.e., intraLATA and/or interLATA and/or international); and

(5) The carrier identification code of the IXC.

(g) *Change of local service provider.* When a customer changes LECs, the customer's former LEC must notify the customer's PIC(s) of the customer's change in LEC and, if known, the identity of the customer's new LEC. If the customer also makes a PIC change, the customer's former LEC must also notify the customer's former PIC(s) of the change. When a customer only changes LECs, the new LEC must notify the customer's current PIC(s) that the customer's PIC selection has not changed. If the customer also makes a PIC change, the new LEC must notify the customer's new PIC of the customer's PIC selection. If the customer's former LEC is unable to identify the customer's new LEC, the former LEC must notify the customer's PIC(s) of a local service disconnection as described in paragraph (f).

(1) The required notifications also must contain information, if relevant and to the extent that it is available, reflecting the fact that an account change was the result of:

(i) The customer porting his number to a new LEC;

(ii) A local resale arrangement (customer has transferred to local reseller); or

(iii) The discontinuation of a local resale arrangement;

(2) The notification provided by the LEC to the IXC must include:

(i) The customer's billing telephone number, working telephone number, and, billing name and address;

(ii) The effective date of the change of local service providers or PIC change;

(iii) A description of the customer type (i.e., business or residential);

(iv) The jurisdictional scope of the lines or terminals affected (i.e., intraLATA and/or interLATA and/or international); and

(v) The carrier identification code of the IXC.

(h) *IXC requests for customer BNA information.* Upon the request of an IXC, a LEC must provide the billing name and address information necessary to facilitate a customer's receipt of a timely, accurate bill for services rendered and/or to prevent fraud, regardless of the type of service

the end user receives/has received from the requesting carrier (i.e., presubscribed, dial-around, casual). In response to an IXC's BNA request for ANI, a LEC must provide the BNA for the submitted ANI along with:

(1) The working telephone number for the ANI;

(2) The date of the BNA response;

(3) The carrier identification code of the submitting IXC; and

(4) A statement indicating, to the extent appropriate, if the customer's telephone service listing is not printed in a directory and is not available from directory assistance, or is not printed in a directory but is available from directory assistance. A LEC that is unable to provide the BNA requested must provide the submitting carrier with the identical information contained in the original BNA request (i.e., the mirror image of the original request), along with the specific reason(s) why the requested information could not be provided. If the BNA is not available because the customer has changed local service providers or ported his telephone number, the LEC must include the identity of the new provider when this information is available.

[FR Doc. E6–20911 Filed 12–12–06; 8:45 am]

BILLING CODE 6712–01–P

FEDERAL COMMUNICATIONS COMMISSION

47 CFR Part 97

[WT Docket No. 04–140; DA 06–2379]

Amateur Service Rules

AGENCY: Federal Communications Commission.

ACTION: Correcting amendments.

SUMMARY: This document contains corrections to the final regulations which were published in the **Federal Register** on Wednesday, November 15, 2006, (71 FR 66460). This amendment will clarify that the 500 Hz limitation in the definition applies only to the emission types that were added to the definition of data when these emissions transmitted on amateur service frequencies below 30 MHz.

DATES: Effective December 15, 2006.

FOR FURTHER INFORMATION CONTACT: William T. Cross, Wireless Telecommunications Bureau at (202) 418–0691, or TTY (202) 418–7233.

SUPPLEMENTARY INFORMATION:

Background

On October 10, 2006, the Commission released a *Report and Order*, FCC 06–149, at 71 FR 66460, November 15, 2006, which incorrectly defined some of the ''Data. Telemetry, telecommand and computer communications emissions'' under 47 CFR 97.3(c)(2)(ii) and (c)(2)(iii) in the Amateur Radio Service proceeding in WT Docket No. 04–140. The *Erratum* corrects the rule amendments in §§ 97.3(c)(2)(ii) and (c)(2)(iii) of the *Report and Order*. The overall effect of this action is to revise § 97.3(c)(2) to conform the rule to the pertinent discussion in the text of the *Report and Order*.

Need for Correction

As published, the final regulations contain errors which may prove to be misleading and need to be clarified.

List of Subjects in 47 CFR Part 97

Radio.

■ Accordingly, 47 CFR part 97 is corrected by making the following correcting amendments:

PART 97—AMATEUR RADIO SERVICE

■ 1. The authority citation for part 97 continues to read as follows:

Authority: 48 Stat. 1066, 1082, as amended; 47 U.S.C. 154, 303. Interpret or apply 48 Stat. 1064–1068, 1081–1105, as amended; 47 U.S.C. 151–155, 301–809, unless otherwise noted.

■ 2. Revise paragraph (c)(2) of § 97.3 to read as follows:

§ 97.3 Definitions.

* * * * *

(c) * * *

(2) Data. Telemetry, telecommand and computer communications emissions having (i) designators with A, C, D, F, G, H, J or R as the first symbol, 1 as the second symbol, and D as the third symbol; (ii) emission J2D; and (iii) emissions A1C, F1C, F2C, J2C, and J3C having an occupied bandwidth of 500 Hz or less when transmitted on an amateur service frequency below 30 MHz. Only a digital code of a type specifically authorized in this part may be transmitted.

* * * * *

Federal Communications Commission.

Katherine M. Harris,

Deputy Chief, Mobility Services Division.

[FR Doc. E6–21004 Filed 12–12–06; 8:45 am]

BILLING CODE 6712–01–P

DEPARTMENT OF TRANSPORTATION

National Highway Traffic Safety Administration

49 CFR Part 571

[Docket No. NHTSA–2006–26299]

Federal Motor Vehicle Safety Standards; Brake Hoses

AGENCY: National Highway Traffic Safety Administration (NHTSA), Department of Transportation.

ACTION: Final rule; delay of effective date.

SUMMARY: NHTSA published a final rule in December 2004 that amended the Federal motor vehicle safety standard on brake hoses, and announced an effective date of December 20, 2006. The agency has received several petitions for reconsideration of the rule and a petition to delay the effective date of the final rule. To allow for more time to respond to petitions for reconsideration, and to give industry more time to meet new requirements, this document delays the effective date of the final rule for one year, to December 20, 2007.

This decision was made after NHTSA published a notice of proposed rulemaking on November 15, 2006, soliciting public comment on whether the effective date should be extended. All commenters wrote in support of extending the effective date.

DATES: The effective date of the final rule amending 49 CFR 571.106 published at 69 FR 76298 on December 20, 2004 is delayed until December 20, 2007. Optional early compliance continues to be permitted as of February 18, 2005. Any petitions for reconsideration of today's final rule must be received by NHTSA not later than January 29, 2007.

ADDRESSES: Petitions for reconsideration should refer to the docket number for this action and be submitted to: Administrator, National Highway Traffic Safety Administration, 400 Seventh Street, SW., Washington, DC 20590.

FOR FURTHER INFORMATION CONTACT: For technical issues you may call: Mr. Jeff Woods, Vehicle Dynamics Division, Office of Crash Avoidance Standards, at (202) 366–6206. Mr. Woods' FAX number is: (202) 366–4921.

For legal issues, you may call Ms. Dorothy Nakama, Office of the Chief Counsel, at (202) 366–2992. Her FAX number is: (202) 366–3820.

You may send mail to both of these officials at the National Highway Traffic Safety Administration, 400 Seventh Street, SW., Washington, DC 20590.

SUPPLEMENTARY INFORMATION:

Background

Federal Motor Vehicle Safety Standard No. 106, Brake hoses (49 CFR 571.106) (FMVSS No. 106), specifies labeling and performance requirements for motor vehicle brake hose, brake hose assemblies, and brake hose end fittings. The purpose of FMVSS No. 106 is to reduce deaths and injuries occurring as a result of brake system failure from pressure or vacuum loss due to hose or hose assembly rupture.

2004 Final Rule

On December 20, 2004 (69 FR 76298)(DMS Docket No. NHTSA–2003–14483), NHTSA published a final rule amending FMVSS No. 106 to update the standard and incorporate the most recent substantive technical requirements of several Society of Automotive Engineers (SAE) Recommended Practices relating to hydraulic brake hoses, vacuum brake hoses, air brake hoses, plastic air brake tubing, and end fittings. The final rule specified an effective date of December 20, 2006 for these amendments. Optional early compliance with the final rule was permitted as of February 18, 2005.

Petitions for Reconsideration

In early 2005, NHTSA received petitions for reconsideration of the December 20, 2004 final rule from Cooper Standard Automotive (Fluid Division), Degussa Corporation, George Apgar Consulting, MPC, Inc., and Parker Hannifin Corporation (with separate comments from its Brass Division and from its Hose Products Division). The petitions addressed a wide range of FMVSS No. 106 subjects.

Petition for Extension of the Effective Date

In a submission dated September 12, 2006, Legris (a division of Groupe Legris Industries) petitioned NHTSA for a delay of the December 20, 2004 final rule for an additional year, to December 20, 2007. Legris stated that it learned of the changes to FMVSS No. 106 ''within the past few months'' and stated that it cannot make all necessary changes to its brake hose products before the December 20, 2006 effective date. Legris asserted that without the extension, its business and customer base will be jeopardized and it will ''be faced with a considerable loss of both sales revenue and profits, as well as losses from products already manufactured but which could not be installed in vehicles until after December 20, 2006.''

Notice of Proposed Extension of Effective Date

The petitions for reconsideration asked NHTSA to amend many of the December 20, 2004 final rule's provisions on brake hoses, brake hose assemblies, and end fittings. Our response to those petitions could affect the designs of certain types of brake hoses. The numerous issues raised in the petitions are complex. In some cases, the petitioners ask for changes that differ from those requested by other petitioners. The agency is in the process of developing its response to the petitions. A 12-month delay of the effective date, to December 20, 2007, would preserve the status quo until then.

On November 15, 2006 (71 FR 66480) (DMS Docket No. NHTSA–2006–26299), NHTSA published a **Federal Register** notice proposing to delay the effective date for one year, to December 20, 2007. NHTSA stated that if made final, the NPRM would make no substantive change to the standard, but would only delay the effective date of the December 20, 2006 final rule for another year while the agency responds to the petitions for reconsideration of the rule. Because the agency sought to provide as much lead time as possible about its final determination whether the effective date will be delayed, a 15-day comment period on the issue of the delay of the December 20, 2004 final rule's effective date was provided.

Public Comments and Final Rule

In response to the November 15, 2006 NPRM, NHTSA received comments from: the Truck Manufacturers Association; the Alliance of Automobile Manufacturers; Mr. George B. Apgar, Chairman of the Society of Automotive Engineers Fluid Conductors and Conductors Technical Committee, Nonmetallic Airbrake Tubing and Fittings Subcommittee; and from four manufacturers of air brake hoses, other brake hose products or brake system components. All commenters wrote in support of delaying the effective date of the FMVSS No. 106 final rule to December 20, 2007. One commenter wrote that it ''just learned of the changes to FMVSS No. 106 within the last week.''

After considering the comments, NHTSA has decided to delay to December 20, 2007, the effective date of the December 20, 2004 final rule amending FMVSS No. 106.

This Document Takes Effect Immediately

Because December 20, 2006 (the original effective date for the FMVSS No. 106 final rule) is fast approaching, NHTSA also finds for good cause that this action delaying the effective date should take effect immediately. Today's final rule makes no substantive change to FMVSS No. 106, but delays the effective date of the December 20, 2004 final rule for one year while the agency responds to the petitions for reconsideration of the rule.

Rulemaking Analyses and Notices

A. Executive Order 12866, Regulatory Planning and Review, and DOT Regulatory Policies and Procedures

We have considered the impact of this rulemaking action under Executive Order 12866 and the Department of Transportation's regulatory policies and procedures. This rulemaking document was not reviewed under E.O. 12866, ''Regulatory Planning and Review.'' Further, we have determined that this action is not ''significant'' within the meaning of the Department of Transportation's regulatory policies and procedures (44 FR 11034; February 26, 1979).

This rule delays the effective date of a December 20, 2004 final rule amending FMVSS No. 106. There are no additional costs associated with the delay of the effective date. Since the safety benefits from the December 20, 2004 final rule cannot be quantified, and are likely minor, the impact of this extension is also minor.

B. Regulatory Flexibility Act

NHTSA has considered the impacts of this rulemaking action under the Regulatory Flexibility Act (5 U.S.C. 601 *et seq.*). I certify that the rule will not have a significant economic impact on a substantial number of small entities. This rule does not impose any new requirements or costs on manufacturers. It only preserves the status quo for an additional year.

C. Paperwork Reduction Act

Under the Paperwork Reduction Act of 1995 (44 U.S.C. 3501 *et seq.*) (PRA), a person is not required to respond to a collection of information by a Federal agency unless the collection displays a valid OMB control number. Since it only delays the effective date of a final rule, this final rule does not impose any new collection of information requirements for which a 5 CFR part 1320 clearance must be obtained.

D. National Environmental Policy Act

We have analyzed this rule for the purposes of the National Environmental Policy Act. We have determined that implementation of this action will not

have any significant impact on the quality of the human environment.

E. Executive Order 13132, Federalism

This rule will not have substantial direct effects on the States, on the relationship between the national government and the States, or on the distribution of power and responsibilities among the various levels of government, as specified in Executive Order 13132.

F. Civil Justice Reform

This rule will not have any retroactive effect. A petition for reconsideration or other administrative proceedings are not required before parties may file suit in court.

G. Unfunded Mandates Reform Act

This rule will not result in costs of $100 million or more to either State, local, or tribal governments, in the aggregate, or to the private sector. Thus, this rule is not subject to the requirements of sections 202 and 205 of the Unfunded Mandates Reform Act.

Authority: 49 U.S.C. 322, 30111, 30115, 30117, and 30166; delegations of authority at 49 CFR 1.50 and 501.8.

Issued on: December 8, 2006.

Stephen R. Kratzke,

Associate Administrator for Rulemaking.

[FR Doc. E6–21207 Filed 12–12–06; 8:45 am]

BILLING CODE 4910–59–P

Proposed Rules

Federal Register
Vol. 71, No. 239
Wednesday, December 13, 2006

This section of the FEDERAL REGISTER contains notices to the public of the proposed issuance of rules and regulations. The purpose of these notices is to give interested persons an opportunity to participate in the rule making prior to the adoption of the final rules.

DEPARTMENT OF AGRICULTURE

Animal and Plant Health Inspection Service

9 CFR Part 78

[Docket No. APHIS–2006–0183]

RIN 0579–AC21

Brucellosis in Cattle; Research Facilities

AGENCY: Animal and Plant Health Inspection Service, USDA.

ACTION: Proposed rule.

SUMMARY: We are proposing to amend the brucellosis regulations in order to facilitate research to be conducted on brucellosis-exposed or infected animals. Under the current regulations, such research could adversely affect a State's brucellosis classification. For example, the criteria for achieving and maintaining Class Free status provide that all cattle herds in the State or area must be released from quarantine and remain free of brucellosis for 12 consecutive months. Because the current definition of *herd* includes animals held in a research facility, a State could lose its Class Free status by allowing such research. By providing an exception for brucellosis-exposed or infected animals held within federally approved research facilities, this proposed rule would enable the initiation of necessary brucellosis research in Class Free States.

DATES: We will consider all comments that we receive on or before February 12, 2007.

ADDRESSES: You may submit comments by either of the following methods:

- *Federal eRulemaking Portal:* Go to *http://www.regulations.gov*, select ''Animal and Plant Health Inspection Service'' from the agency drop-down menu, then click ''Submit.'' In the Docket ID column, select APHIS–2006–0183 to submit or view public comments and to view supporting and related materials available electronically. Information on using Regulations.gov, including instructions for accessing documents, submitting comments, and viewing the docket after the close of the comment period, is available through the site's ''User Tips'' link.
- *Postal Mail/Commercial Delivery:* Please send four copies of your comment (an original and three copies) to Docket No. APHIS–2006–0183, Regulatory Analysis and Development, PPD, APHIS, Station 3A–03.8, 4700 River Road, Unit 118, Riverdale, MD 20737–1238. Please state that your comment refers to Docket No. APHIS–2006–0183.

Reading Room: You may read any comments that we receive on this docket in our reading room. The reading room is located in room 1141 of the USDA South Building, 14th Street and Independence Avenue, SW., Washington, DC. Normal reading room hours are 8 a.m. to 4:30 p.m., Monday through Friday, except holidays. To be sure someone is there to help you, please call (202) 690–2817 before coming.

Other Information: Additional information about APHIS and its programs is available on the Internet at *http://www.aphis.usda.gov.*

FOR FURTHER INFORMATION CONTACT: Dr. Debra Donch, National Brucellosis Epidemiologist, National Center for Animal Health Programs, VS, APHIS, 4700 River Road, Unit 43, Riverdale, MD 20737–1231; (301) 734–5952.

SUPPLEMENTARY INFORMATION:

Background

Brucellosis is a contagious disease affecting animals and humans, caused by bacteria of the genus *Brucella*. The brucellosis regulations, contained in 9 CFR part 78 (referred to below as the regulations), provide a system for classifying States or portions of States according to the rate of *Brucella* infection present and the general effectiveness of a brucellosis control and eradication program. The classifications are Class Free, Class A, Class B, and Class C. States or areas that do not meet the minimum standards for Class C are required to be placed under Federal quarantine.

The brucellosis Class Free classification is based on a finding of no known brucellosis in cattle for the 12 months preceding classification as Class Free. The Class C classification is for States or areas with the highest rate of brucellosis. Class A and Class B fall between these two extremes. Restrictions on moving cattle interstate become less stringent as a State approaches or achieves Class Free status.

The regulations require that, to achieve and retain Class Free status, a State or area must have no cattle herds under quarantine. As a practical matter, this precludes any brucellosis research in Class Free States or areas, since infected animals may be used for such research, and the animals held in a research facility would be considered a herd under the current definition of that term. In § 78.1, *herd* is defined, in part, as, ''all animals under common ownership or supervision that are grouped on one or more parts of any single premises (lot, farm, or ranch).'' Currently, 48 of the 50 States are classified as brucellosis Class Free. Since research expertise and infrastructure potentially applicable to this country's brucellosis eradication efforts can be found in many Class Free States, this limitation may impede the progress of brucellosis research and delay eradication of the disease in the United States. We are proposing, therefore, to amend the definition of *herd* to specifically exclude animals that are contained within a federally approved research facility. While primarily intended to facilitate brucellosis research in Class Free States, this proposed change to the definition of *herd* would ensure that the presence of infected animals held for brucellosis research would not adversely affect the State's brucellosis classification.

In order to gain Federal approval, a research facility must first adopt and demonstrate compliance with a series of guidelines established by the Animal and Plant Health Inspection Service (APHIS) and the Agricultural Research Service. These guidelines address, among other things, biological security, recordkeeping, identification, and sanitation standards. Additionally, each study conducted in a federally approved research facility must be approved by the State animal health official and the APHIS Area Veterinarian in Charge. Currently, certain facilities in Colorado, Idaho, Iowa, and Louisiana are approved to conduct brucellosis research under these guidelines. Our proposed change to the definition of

herd would remove an obstacle to the initiation of brucellosis research, primarily in Class Free States, by ensuring that the animals held for such research are not considered a ''herd'' for the purposes of assigning or renewing a State's brucellosis status.

Executive Order 12866 and Regulatory Flexibility Act

This proposed rule has been reviewed under Executive Order 12866. The rule has been determined to be not significant for the purposes of Executive Order 12866 and, therefore, has not been reviewed by the Office of Management and Budget.

Brucellosis is a contagious, costly disease of ruminants that also affects humans. Although brucellosis can infect other animals, it is primarily a threat to cattle, bison, and swine. In animals, the disease causes weight loss, decreased milk production, loss of young, infertility, and lameness. There is no cure for brucellosis in animals, nor is there a preventative vaccine that is 100 percent effective.

Given the potential for costly consequences related to an outbreak of brucellosis, additional research is needed in order to eradicate this economically damaging disease. In 1952, when brucellosis was widespread throughout the United States, annual losses from lowered milk production, aborted calves and pigs, and reduced breeding efficiency were estimated at $400 million. Subsequent studies show that if eradication efforts were stopped, the costs of producing beef and milk would increase by an estimated $80 million annually in less than 10 years.

We expect that the groups affected by this proposed action would be herd owners and the entities that would operate any brucellosis research facilities established in Class Free States. To the extent that it would allow for more research with the goal of eradicating brucellosis in the United States, this proposed rule would benefit all herd owners over time. Brucellosis research facilities in Class Free States would be operated by the State in which they were located or exist as part of colleges or universities that have government contracts to conduct brucellosis research.

The latest agricultural census data show that there were 732,660 farms in the United States primarily engaged in beef cattle ranching and farming and dairy cattle and milk production that reported sales in 2002. Of those farms, over 99 percent were classified as small entities according to Small Business Association (SBA) standards. There were 82,028 farms in the United States primarily engaged in raising hogs and pigs that reported sales in 2002. Of those farms, over 90 percent were classified as small entities by the SBA. Most, if not all, of the farms primarily engaged in bison production are classified as small entities under SBA standards. Accordingly, the majority of herd owners potentially affected by this proposed rule are considered small entities. For herd owners, any economic effects stemming from this proposed rule would result from advances made toward the eradication of brucellosis in the United States. As such, these economic effects would be positive, but long-term and generalized.

Under these circumstances, the Administrator of the Animal and Plant Health Inspection Service has determined that this action would not have a significant economic impact on a substantial number of small entities.

Executive Order 12372

This program/activity is listed in the Catalog of Federal Domestic Assistance under No. 10.025 and is subject to Executive Order 12372, which requires intergovernmental consultation with State and local officials. (See 7 CFR part 3015, subpart V.)

Executive Order 12988

This proposed rule has been reviewed under Executive Order 12988, Civil Justice Reform. If this proposed rule is adopted: (1) All State and local laws and regulations that are in conflict with this rule will be preempted; (2) no retroactive effect will be given to this rule; and (3) administrative proceedings will not be required before parties may file suit in court challenging this rule.

Paperwork Reduction Act

This proposed rule contains no information collection or recordkeeping requirements under the Paperwork Reduction Act of 1995 (44 U.S.C. 3501 *et seq*).

List of Subjects in 9 CFR Part 78

Animal diseases, Bison, Cattle, Hogs, Quarantine, Reporting and recordkeeping requirements, Transportation.

Accordingly, we propose to amend 9 CFR part 78 as follows:

PART 78—BRUCELLOSIS

1. The authority citation for part 78 would continue to read as follows:

Authority: 7 U.S.C. 8301–8317; 7 CFR 2.22, 2.80, and 371.4.

2. In § 78.1, the definition of **herd** would be revised to read as follows:

§ 78.1 Definitions

* * * * *

Herd. (a) All animals under common ownership or supervision that are grouped on one or more parts of any single premises (lot, farm, or ranch); or

(b) All animals under common ownership or supervision on two or more premises which are geographically separated but on which animals from the different premises have been interchanged or had contact with each other.

(c) For the purposes of this part, the term **herd** does not include animals that are contained within a federally approved research facility.

* * * * *

Done in Washington, DC, this 6th day of December 2006.

Kevin Shea,

Acting Administrator, Animal and Plant Health Inspection Service.

[FR Doc. E6–21172 Filed 12–12–06; 8:45 am]

BILLING CODE 3410–34–P

DEPARTMENT OF AGRICULTURE

Animal and Plant Health Inspection Service

9 CFR Part 93

[Docket No. APHIS–2006–0013]

RIN 0579–AC00

Standards for Permanent, Privately Owned Horse Quarantine Facilities

AGENCY: Animal and Plant Health Inspection Service, USDA.

ACTION: Proposed rule; withdrawal and reproposal.

SUMMARY: We are proposing to amend the regulations pertaining to the importation of horses to establish standards for the approval of permanent, privately owned quarantine facilities for horses. We are taking this action because demand for quarantine services for horses exceeds the space available at existing facilities. This proposed rule replaces a previously published proposed rule, which we are withdrawing as part of this document, that contained substantially different restrictions on ownership and substantially different requirements for the physical plant, operating procedures, and compliance date. We believe that allowing imported horses to be quarantined in permanent, privately owned quarantine facilities that meet these newly proposed criteria would facilitate the importation of horses while continuing to protect against the

introduction of communicable diseases of horses.

DATES: We will consider all comments that we receive on or before February 12, 2007.

ADDRESSES: You may submit comments by either of the following methods:

- *Federal eRulemaking Portal:* Go to *http://www.regulations.gov,* select ''Animal and Plant Health Inspection Service'' from the agency drop-down menu, then click ''Submit.'' In the Docket ID column, select APHIS–2006–0013 to submit or view public comments and to view supporting and related materials available electronically. Information on using Regulations.gov, including instructions for accessing documents, submitting comments, and viewing the docket after the close of the comment period, is available through the site's ''User Tips'' link.
- *Postal Mail/Commercial Delivery:* Please send four copies of your comment (an original and three copies) to Docket No. APHIS–2006–0013, Regulatory Analysis and Development, PPD, APHIS, Station 3A–03.8, 4700 River Road Unit 118, Riverdale, MD 20737–1238. Please state that your comment refers to Docket No. APHIS–2006–0013.

Reading Room: You may read any comments that we receive on this docket in our reading room. The reading room is located in room 1141 of the USDA South Building, 14th Street and Independence Avenue, SW., Washington, DC. Normal reading room hours are 8 a.m. to 4:30 p.m., Monday through Friday, except holidays. To be sure someone is there to help you, please call (202) 690–2817 before coming.

Other Information: Additional information about APHIS and its programs is available on the Internet at *http://www.aphis.usda.gov.*

FOR FURTHER INFORMATION CONTACT: Dr. Freeda Isaac, Staff Veterinarian, National Center for Import and Export, VS, APHIS, 4700 River Road Unit 39, Riverdale, MD 20737–1231; (301) 734–8364.

SUPPLEMENTARY INFORMATION:

Background

The regulations in 9 CFR part 93 govern the importation into the United States of specified animals and animal products in order to help prevent the introduction of various animal diseases into the United States. The regulations in part 93 require that some of these animals be quarantined upon arrival in the United States as a condition of entry. The Animal and Plant Health Inspection Service (APHIS) of the U.S. Department of Agriculture (USDA) operates animal quarantine facilities and authorizes the use of privately owned quarantine facilities for certain animal importations. The regulations in subpart C of part 93 (9 CFR 93.300 through 93.326, referred to below as the regulations) pertain to the importation of horses and include requirements for privately owned quarantine facilities for horses. These requirements are for the approval and establishment of temporary quarantine facilities for the purpose of quarantining imported horses for a specific event.

In addition to operating Federal animal quarantine facilities and authorizing the operation of temporary, privately owned quarantine facilities for horses, APHIS currently authorizes the operation of one permanent, privately owned quarantine facility for horses, located in Los Angeles County, CA.

The demand for import quarantine facilities for horses has risen in recent years as the amount of trade between the United States and other countries has risen. From 1992 to 2003, the number of horses imported annually into the United States increased substantially. In some cases, the demand for quarantine services for horses has exceeded the space available at existing Federal facilities. In addition, the geographic distribution of the currently operating horse quarantine facilities can make it difficult or costly to import horses to some areas; in some geographically isolated locations, such as Hawaii and Puerto Rico, no facilities exist for quarantining imported horses, reducing the ability of importers to profitably bring horses to those States. The demand for quarantine services for horses cannot always be filled by temporary, privately owned quarantine facilities because such facilities are established, approved, and operated by importers on a temporary basis to handle only horses imported for a unique importation, race, or show.

We have considered the possible need for permanent, privately owned quarantine facilities for horses in the past. On September 6, 1989, we published in the **Federal Register** (54 FR 36986–36996, Docket No. 85–061) a proposed rule that would have (1) allowed the operation of permanent, privately owned quarantine facilities for horses; (2) added new requirements for the approval of temporary, privately owned quarantine facilities for horses; and (3) required payment from each privately owned quarantine facility for services provided by APHIS at the facility. These changes would have been made in 9 CFR part 92; however, a 1990 final rule reorganized part 92, and the proposed provisions were no longer consistent with the new format of the part. Because of this inconsistency and for other reasons, we withdrew the proposed rule and reopened the issue for public discussion in a notice of withdrawal and an advance notice of proposed rulemaking published in the **Federal Register** on February 26, 1996 (61 FR 7079, Docket No. 95–084–1). Then, on May 6, 1996, we published a notice (61 FR 20189–20190, Docket No. 95–084–2) that we were reopening and extending the public comment period for the advance notice of proposed rulemaking and holding a public meeting on May 17, 1996, regarding the issue of permanent, privately owned quarantine facilities for horses.

We received 10 comments during the 2 comment periods and at the public meeting just described. Some commenters supported the concept of permanent, privately owned quarantine facilities for horses, and some commenters were opposed. We considered the comments and decided to propose regulations that would allow the establishment of permanent, privately owned horse quarantine facilities that would operate under the oversight of an APHIS veterinarian.

On July 1, 2002, we published in the **Federal Register** (67 FR 44097–44111, Docket No. 99–012–1) a proposal to establish requirements in the regulations for the approval and operation of such facilities. We solicited comments concerning our proposal for 60 days ending August 30, 2002. We subsequently extended the deadline for comments until October 15, 2002, in a document published in the **Federal Register** on September 30, 2002 (67 FR 61293, Docket No. 99–012–2).

We received 59 comments by the close of the extended comment period. They were from import-export brokers, horse traders, operators of quarantine facilities, and representatives of State governments. The majority of these comments came from import-export brokers who supported the proposed rule on the grounds that current shortages in USDA quarantine space were negatively impacting their businesses. However, commenters raised issues about proposed ownership requirements, physical plant requirements, operating procedures, compliance, and other provisions that led us to rethink aspects of the proposed rule.

As a consequence, we are withdrawing the July 2002 proposed rule mentioned above and replacing it with an alternative proposal. This alternative proposal retains many of the

provisions of the July 2002 proposed rule, but incorporates numerous suggestions made by commenters and proposes a few new requirements. The most significant new provisions and changes in this reproposal are: A new provision that would require that the operator or any person responsibly connected with the business of a permanent, privately owned facility not act as a broker for the sale or importation of horses; several amended provisions that would change the biosecurity safeguards relating to disease transmission between lot-holding areas; a new provision that would allow necropsies to be conducted off-site from the facility; and a change to prohibit vaccinations from being performed at the facility.

The full text of the proposed regulations appears in the rule portion of this document. Our discussion of the proposed provisions follows. We have incorporated our responses to comments we received concerning the July 2002 proposed rule into our discussion of the provisions in this proposed rule.

General Discussion

We intend to maintain the current requirements in the regulations for the approval of temporary, privately owned quarantine facilities for horses. We believe that these requirements are sufficient for facilities that are intended to quarantine horses imported only for a particular event. Temporary facilities are generally used to quarantine small numbers of animals in a single group and are in operation for only a short period of time before all the animals are removed and the facility is closed.

We continue to believe that permanent, privately owned horse quarantine facilities, constructed and operated using the proper safeguards, would provide an effective and efficient means of bringing horses into the United States without compromising our ability to protect against the introduction of communicable diseases of horses. We are, therefore, proposing to add requirements to the regulations for the establishment and approval of permanent, privately owned quarantine facilities for horses.

These proposed requirements are designed to maintain the same level of biological security standards as other permanent quarantine facilities operated by APHIS. We believe that the permanent, privately owned facilities must be designed, equipped, and monitored similarly to APHIS quarantine facilities in order to provide sufficient protection against the introduction of disease. Like an APHIS facility, a permanent, privately owned quarantine facility could be occupied on a continuing basis by a large number of horses imported from many different regions. These circumstances dictate that security measures must be tighter, and disease detection and prevention measures must be different, at permanent facilities than at temporary ones. While the requirements for temporary facilities allow for variation in physical plants, the proposed requirements for permanent facilities would ensure a greater degree of consistency in the physical plants of those facilities. Such consistency should help ensure a greater degree of biological security. The proposed requirements for permanent facilities would also set out the operational and monitoring procedures necessary to prevent the spread of disease into, within, and from the facilities in much more detail than the requirements for temporary facilities.

In response to the July 2002 proposed rule, which also sought to ensure that permanent, privately owned facilities were similar to APHIS facilities, one commenter argued that it would be inappropriate to require a level of biological security similar to that of current APHIS quarantine facilities because APHIS facilities handle other livestock such as cattle and goats in addition to handling horses. In this commenter's view, horses require less stringent biological security measures than other animals, because the purpose of quarantining horses is to isolate the horses while blood tests are run and to monitor horse health, rather than to diagnose communicable diseases of horses. Thus, the commenter argued, the level of biological security that would be required under the standards described in the July 2002 proposed rule was excessive and would not have resulted in an appreciable reduction of risk.

The purpose of horse quarantine is to observe imported horses for any sign of communicable animal diseases, not just to determine whether the horses are affected with any of the diseases for which APHIS requires imported horses to be tested. The requirements described in the July 2002 proposed rule were designed to ensure that horses would be observed for signs of disease in a facility that presented the smallest possible risk of disease being transmitted into the domestic horse population, while ensuring that the horses in the facility were properly cared for, fed, and handled. The proposed requirements were developed specifically to address the unique problems and risks posed in quarantining horses. Given the myriad foreign animal diseases that may be detected only under proper quarantine scrutiny and the continuing risk that such diseases may be transmitted into the domestic horse population, we believe that lowering the level of biological security required by the standards described in the July 2002 proposed rule would be inconsistent with APHIS' duty to prevent the introduction of dangerous foreign animal diseases. Therefore, we have made no changes to the approach of the July 2002 proposed rule in response to this comment.

The same commenter stated that no evidence exists to justify biological security measures for permanent facilities that are more restrictive than the biological security measures already in place at the one currently operating permanent, privately owned horse quarantine facility. The commenter noted that no equine disease has ever passed from imported horses quarantined in the currently operating permanent facility into the general horse population, and requested that APHIS conduct a risk assessment to determine exactly what level of biological security is necessary for horse quarantine facilities.

In guarding against the introduction of foreign animal diseases into the United States, APHIS, among other things, examines the possible ways that such diseases could be spread among or from animals being held in quarantine, and determines what measures are necessary to guard against such spread. While it is true that the measures in place at the one currently operating permanent, privately owned facility serve to a great extent to mitigate the risk of such spread, based on the nature of diseases affecting horses and our own experience quarantining horses intended for entry into the United States, we consider more restrictive measures to be necessary to mitigate the risk of disease spread from horses entered into any permanent, privately owned horse quarantined facility.

APHIS based the requirements in the July 2002 proposed rule for permanent facilities on an evaluation of our experience in mitigating the risk of disease introduction via imported horses, and modeled the proposed risk mitigation measures on those in place at APHIS-operated and -approved quarantine facilities. In those cases where commenters on the July 2002 proposed rule asserted that certain specific mitigating measures were not necessary, and the available evidence supported their claims, we have removed those measures from this new proposal. The fact that no equine diseases are known to have passed

through the currently operating permanent, privately owned facility into the general horse population to date does not in itself address potential risks.

Changes in Our Approach With Respect to Lot-Holding Areas

We have modified one aspect of our approach to biological security in response to various comments we received. The July 2002 proposed rule included numerous biological security requirements intended to prevent disease transmission between lots of horses held within the quarantine facility. A lot of horses is a group of horses that, while held on a premises or conveyance, have had opportunity for physical contact with other horses in the group or with their excrement or discharges at any time during their shipment to the United States. The lot-holding area, therefore, is that area in a permanent, privately owned quarantine facility in which a single lot of horses is held at one time. A lot-holding area can comprise a stall, a group of stalls, or an entire building, provided that the physical plant and operational requirements relating to a lot-holding area are met.

The July 2002 proposed rule included proposed safeguards designed to prevent the transmission of any diseases that might be present in one lot of horses to another lot of horses held in the same quarantine facility. These safeguards included: Separate drainage and heating, ventilation, and air conditioning (HVAC) systems; physical barriers including lockable doors; and operational safeguards including showering and changing clothing when moving between lot-holding areas.

While these safeguards would meet the goal of reducing exposure between lots of horses, they do not in all cases reflect the construction of the permanent horse quarantine facilities operated by APHIS or the operational procedures in place at those facilities. We do not believe it is appropriate to require that permanent, privately owned quarantine facilities meet biosecurity standards different from those that have been determined and proven by APHIS to be effective when employed at our own facilities. Therefore, the proposed requirements related to lot-holding areas, which are discussed later in this document, have been adjusted. In all cases, when addressing issues related to lot-holding areas in this reproposal, we have either retained the proposed requirements presented in the July 2002 proposed rule or have provided more options for complying with the requirements while continuing to prevent the transmission of diseases between lots of horses and from the quarantine facility to domestic horses.

These changes to the July 2002 proposed rule make the construction standards and the operating procedures described in this reproposal consistent with those of the permanent horse quarantine facilities operated by APHIS. The construction standards and the operating procedures of these facilities have been reviewed repeatedly by APHIS veterinarians and disease biologists and found to be adequate to prevent the transmission of disease between lots of horses. Under both the July 2002 proposed rule and this reproposal, permanent, privately owned horse quarantine facilities would operate under continuous APHIS oversight to ensure that operating procedures are correctly followed to prevent the spread of disease between lots. In addition, if there was a disease outbreak in a permanent, privately owned horse quarantine facility, APHIS would conduct tracebacks for any horses that had been quarantined in the facility at the time the infected horse was quarantined there, as is standard procedure at APHIS-operated horse quarantine facilities. For these reasons, we believe that the safeguards against the transmission of disease between lot-holding areas that we would require in this reproposal are adequate to prevent the spread of disease within and from a permanent, privately owned quarantine facility.

Definitions

We are proposing to add to § 93.300 definitions for the terms *permanent, privately owned quarantine facility* and *temporary, privately owned quarantine facility* to make clear the differences between the two types of facilities. A permanent, privately owned quarantine facility would be one that offers quarantine services for horses to the general public on a continuing basis and that is owned and operated by an entity other than the Federal government. A temporary, privately owned quarantine facility would be one that offers quarantine services for a special event and that is owned and operated by an entity other than the Federal government. Throughout the rest of this document, use of the term ''permanent facility'' means a permanent, privately owned quarantine facility for horses, and use of the term ''temporary facility'' means a temporary, privately owned quarantine facility for horses.

We are proposing to revise the definition for *operator* contained in § 93.300. *Operator* is currently defined as ''for the purposes of § 93.308, any person operating an approved quarantine facility.'' The revised definition of *operator* would read: ''A person other than the Federal government who owns or manages and has responsibility for the services provided by a temporary, privately owned quarantine facility or a permanent, privately owned quarantine facility.'' We are proposing this change because we want to emphasize that, although private entities would own these facilities, they would be subject to APHIS approval and oversight.

We would also add definitions for the terms *lot, lot-holding area, quarantine area,* and *nonquarantine area.* We would define a lot as a group of horses that, while held on a conveyance or premises, have had opportunity for physical contact with other horses in the group or with their excrement or discharges at any time during their shipment to the United States. A lot-holding area would be an area in a facility in which a single lot of horses is held at one time. The quarantine area of a facility would be the area of a facility that comprises all of the lot-holding areas in the facility and any other areas that the horses have access to, including loading docks for receiving and releasing horses. The quarantine area would also include any areas in the facility that are used to conduct examinations of horses and take samples or areas where samples are processed and examined. The nonquarantine area of a facility would include offices, storage areas, and other areas that are outside the quarantine area and off limits to horses, samples taken from horses that have not yet been prepared or packaged for shipment to laboratories, and any other objects or substances that have been in the quarantine area during quarantine of horses.

Nonsubstantive Changes

The requirements for temporary facilities are currently located in § 93.308(b) and (c). Although we are not proposing to make any substantive changes to these requirements, we are proposing to make some nonsubstantive changes to update the language. We are also proposing to combine paragraphs (b) and (c), so that all of the requirements pertaining to the establishment and operation of temporary facilities are located in paragraph (b). (We would make minor editorial changes to these requirements as well.) We would place the proposed regulations pertaining to permanent facilities in the newly vacated § 93.308(c). We would also correct an error in footnote numbering in the regulations.

In addition, we are proposing to revise the heading for § 93.309 to indicate more clearly that the section pertains to payment information for use of all quarantine facilities, including privately owned temporary and permanent quarantine facilities, and quarantine facilities owned by APHIS. The section heading currently reads ''Horse quarantine facilities''; we believe a more helpful heading would be ''Horse quarantine facilities; payment information.'' Therefore, as proposed, § 93.308(a) would contain general information about quarantine requirements for imported horses; § 93.308(b) would contain requirements for temporary facilities; § 93.308(c) would contain requirements for permanent facilities; and § 93.309 would contain information about payment for services provided at all quarantine facilities.

Section 93.303 of the regulations pertains to ports designated for the importation of horses. Paragraph (e) of that section pertains to ports used by persons who quarantine horses at temporary facilities. The paragraph heading in § 93.303(e) currently reads ''Ports and quarantine facilities provided by the importer for horses,'' and the text of the paragraph also refers to quarantine facilities provided by the importer. We are proposing to revise the paragraph heading and text because, under this proposed rule, the owner of a permanent facility would be prohibited from acting as a paid agent (broker) for the importation or subsequent sale of horses. (The July 2002 proposed rule did not include this proposed restriction on quarantine facility ownership; the restriction is discussed in more detail below under the heading ''Approval Requirements.'') The new paragraph heading for § 93.303(e) would read ''Ports for horses to be quarantined at privately owned quarantine facilities,'' and the text would refer to privately owned quarantine facilities rather than to facilities provided by the importer. We would continue to allow brokers to establish temporary, privately owned quarantine facilities.

Section 93.304 contains permit requirements for horses imported from certain regions affected by contagious equine metritis. Paragraphs (a)(1) and (a)(2) contain references to quarantine facilities provided by importers of horses. Under this proposed rule, all quarantine facilities provided by importers of horses could only be temporary, privately owned quarantine facilities. However, we would need to require a permit for importation of horses from these regions into permanent, privately owned facilities as well. Therefore, we are proposing to revise those paragraphs to refer to privately owned quarantine facilities.

Proposed Requirements for Permanent Facilities

We are proposing to add to the regulations information about how to apply for approval of a permanent facility and information concerning denial and withdrawal of approval. Owners of any currently approved quarantine facilities, whether temporary or permanent, who wish to convert to, or be recognized as, a permanent facility would need to meet the proposed requirements for permanent facilities described below and apply for approval as a permanent facility.

Under this proposed rule, any permanent, privately owned quarantine facility operating under APHIS authorization at the time these regulations went into effect would have 1 year to be approved by APHIS; otherwise, it would have to cease operations as a horse quarantine facility. Under the July 2002 proposed rule, that approval would have to have been secured by the effective date of the final rule following that proposal in order for the facility to continue quarantine operations. We made this change to the proposed regulations in response to a comment received regarding the economic analysis of the July 2002 proposed rule; the rationale behind this change is discussed in the context of the economic analysis in this proposed rule, under the heading ''Executive Order 12866 and Regulatory Flexibility Act.''

Approval of Permanent Facilities

Application Process

Proposed § 93.308(c)(1)(i) sets out procedures for applying for approval of a permanent facility. Under the proposed regulations, interested persons would be required to write to the Administrator, c/o National Center for Import and Export, Veterinary Services, APHIS, 4700 River Road Unit 39, Riverdale, MD 20737–1231. The application letter would have to include:

- The full name and mailing address of the applicant;
- The location and street address of the facility for which approval is sought;
- Blueprints of the facility;
- A description of the financial resources available for construction, operation, and maintenance of the facility;
- The anticipated source or origin of horses to be quarantined as well as the expected size and frequency of shipments;
- A contingency plan for horses needing emergency veterinary care; and
- A contingency plan for the disposal of all the horses capable of being housed in the facility.

The July 2002 proposed rule would not have required the application letter to include a contingency plan for horses needing emergency veterinary care. We believe having such a plan is important to the success of a quarantine facility at preventing the transmission of diseases of horses, and therefore we have included that requirement in this reproposal.

If APHIS determines that a submitted application is complete and merits further consideration, we would require that the person applying for facility approval enter into a service agreement with APHIS wherein the applicant agrees to pay the cost of all APHIS services [1] associated with APHIS' evaluation of the application and facility. This service agreement would apply only to fees accrued during the application process. If the facility is approved by APHIS, facility owners would have to enter into a new compliance agreement in accordance with § 93.308(c)(2) of the proposed regulations.

Requests for approval would have to be submitted to APHIS at least 120 days prior to the date of application for local building permits in order to ensure that APHIS has adequate time to evaluate the plans for the facility, assess potential environmental effects, and determine that adequate APHIS personnel are available to staff the facility.

Requests for approval of a proposed facility would be evaluated on a first-come, first-served basis.

Approval Requirements

Proposed § 93.308(c)(1)(ii) lists the basic criteria that a permanent facility would have to meet to be approved by APHIS. A permanent facility would have to meet all the requirements in § 93.308(c). The facility would also have to meet any additional requirements that may be imposed by the Administrator to ensure that the quarantine is adequate to determine the horses' health status and to prevent the transmission of diseases into, within, and from the facility. These additional requirements would be specified in the compliance agreement that would be required under proposed § 93.308(c)(2). Finally, we are proposing that, to be approved as a permanent facility, the Administrator must determine that sufficient APHIS personnel (including

[1] APHIS charges for evaluation services at hourly rates listed in 9 CFR § 130.30.

veterinarians and animal health technicians) are available to ensure the biological security of the facility. This determination would be based on the expected size and frequency of shipments to the facility, as described in the application for approval of a permanent facility, as well as any other pertinent information in the application. Only if a facility met all of the other proposed requirements and APHIS personnel were available would APHIS approve the facility and assign personnel to it. Because the assignment of APHIS personnel would be handled on a ''first-come, first-served'' basis, the deployment of APHIS personnel at one permanent facility might result in another facility not being approved for lack of necessary APHIS personnel. The Administrator would have sole discretion in determining the number of APHIS personnel to be assigned to the facility.

One commenter on the July 2002 proposed rule objected to the requirement that approval be contingent upon the availability of sufficient APHIS personnel. The commenter doubted that, given perceived staffing shortages, any APHIS personnel would be available to serve at these facilities and suggested that this would constitute a barrier to entry for persons applying to own or operate permanent facilities. The commenter further asserted that the presence of APHIS personnel at a permanent facility was unnecessary to ensure the safety of the horses.

While we realize that there may not be enough APHIS personnel available to serve every permanent, privately owned horse quarantine facility that persons may wish to operate, we believe that APHIS personnel must be present at these facilities in order to provide continuous oversight and other technical services, as needed, to ensure the biological security of the facility. Therefore, we would only approve facilities for which sufficient APHIS personnel would be available to ensure the biological security of the facility.

Proposed § 93.308(c)(1)(iii) would require that the operator of a permanent, privately owned horse quarantine facility continue to comply with the requirements of proposed § 93.308(c) and the terms of the compliance agreement executed in accordance with proposed § 93.308(c)(2) in order to maintain APHIS approval.

Proposed § 93.308(c)(1)(iv) sets out procedures for denying or withdrawing approval of permanent facilities. This paragraph would also establish due process procedures regarding a denial or withdrawal of approval and an opportunity for a hearing when there is a dispute of material fact regarding the denial or withdrawal and would provide that the withdrawal of approval for an existing facility will become effective prior to a final disposition of the matter when the Administrator determines it necessary to protect animal health or the public health, interest, or safety. This paragraph would also provide for approval to be withdrawn automatically by the Administrator when the owner notifies, in writing, the Veterinarian in Charge for the State in which the facility is located that the facility is no longer in operation.

Under the proposed regulations, the approval of a permanent facility may be denied or withdrawn if:

- Any requirement of § 93.308 or the compliance agreement is not complied with;
- The operator fails to pay for APHIS services rendered;
- The operator or a person responsibly connected with the business of the permanent facility acts as a paid agent (broker) for the importation or subsequent sale of horses;
- The operator or a person responsibly connected with the business of the permanent facility is or has been found by a court of competent jurisdiction to have violated any law or regulation pertaining to the importation or quarantine of any animal;
- The operator or a person responsibly connected with the business of the permanent facility is or has been convicted of any crime involving fraud, bribery, or extortion or any other crime involving a lack of integrity needed for the conduct of operations affecting the importation of animals; or
- The approved permanent facility has not been in use to quarantine horses for a period of at least 1 year.

The proposed regulations would provide that a person is responsibly connected with the business of the permanent facility if the person has an ownership, mortgage, or lease interest in the facility's physical plant, or if such person is a partner, officer, director, holder or owner of 10 percent or more of its voting stock, or an employee in a managerial or executive capacity for the operation of the permanent facility.

The July 2002 proposed rule did not include any provisions that would have prohibited the operator or a person responsibly connected with the business of the permanent facility from acting as a paid agent or broker for the importation or subsequent sale of horses. We have added this prohibition to the reproposal in response to a request from four of the commenters on the July 2002 proposal. These commenters asserted that a person holding both these positions would face conflicts of interest while housing, treating, and caring for horses imported by other brokers.

We agree that the potential for conflicts of interest is a concern. It is possible that an owner of a permanent, privately owned horse quarantine facility who also engaged in the sale and transport of horses for profit might block a competitor from using the owner's quarantine space, or cancel the competitor's reservations if the owner determined that the competitor's imports would affect the profitability of the owner's brokering business. Similarly, an owner of a permanent, privately owned horse quarantine facility who also is engaged in the sale and transport of horses might choose to weaken competitors in the brokerage business by charging exorbitant fees for quarantine space that could not be obtained elsewhere, as USDA quarantine facilities are filled most of the time; the owner would have even greater leverage if the quarantine facility in question was operating in a geographical area not served by other facilities.

Compliance Agreement

Proposed § 93.308(c)(2) would require permanent facilities to operate in accordance with a compliance agreement executed by the owner and by the APHIS Administrator that must be renewed on an annual basis. The compliance agreement would provide that the facility is required to meet all applicable requirements of § 93.308 of the regulations and that the facility's quarantine operations are subject to the oversight of APHIS representatives. The compliance agreement would also state that the operator of the facility agrees to be responsible for all the costs associated with operating a permanent facility, including:

- All costs associated with its maintenance and operation;
- All costs associated with the hiring of employees and other personnel to attend to the horses as well as to maintain and operate the facility;
- All costs associated with the care of quarantined horses, such as feed, bedding, medicines, inspections, testing, laboratory procedures, and necropsy examinations; and
- All APHIS charges for the services of APHIS representatives in accordance with 9 CFR part 130.

The compliance agreement would also state that the operator agrees to bar from the facility any employee or other personnel at the facility who fail to comply with the proposed regulations

in § 93.308(c), other regulations in 9 CFR part 93, any terms of the compliance agreement, or related instructions from APHIS representatives.

These proposed requirements are identical to those in the July 2002 proposed rule.

Physical Plant Requirements

Proposed § 93.308(c)(3) sets out physical plant requirements. The proposed requirements for the physical plant of permanent facilities are designed to ensure that permanent facilities are capable of preventing the spread of diseases to horses outside the facility. A permanent facility would have to meet these requirements before horses were admitted to the facility.

Location

To minimize the risk of disease introduction from imported horses moving from the port of entry to the permanent facility, proposed § 93.308(c)(3)(i) would require that the facility be located in proximity to a port authorized under § 93.303(e). While requiring that a permanent facility be located in proximity to the port, we decided for several reasons not to require that the port and the facility be located within a certain distance of one another. Some ports will be in large metropolitan areas with the nearest concentration of livestock many miles away. Other ports may be in towns with rural areas and concentrations of livestock within a very short distance of the port. Considering the diversity of places in which persons may consider locating permanent facilities, it would be difficult to stipulate a maximum distance from the port of entry.

The specific routes for the movement of horses from the port to the permanent facility would have to be approved by the Administrator. In evaluating the suitability of a particular site for a permanent facility, the Administrator would consider whether the site of the proposed facility or the routes for movement of horses from the port of entry to the proposed facility would put the animals in a position that could result in the transmission of communicable diseases.

In the July 2002 proposed rule, we proposed to require that the facility be located at least one-half mile from any premises holding livestock or horses. One commenter stated that the other safeguards in the proposed rule provide adequate biological security to mitigate the risk that a communicable disease of horses might be transmitted into the domestic horse population from horses in the quarantine facility.

We agree that the distance requirement would be unnecessary if all other procedures described in this proposed rule were followed at a private, permanently owned horse quarantine facility. In addition, just as the diversity of places in which persons may consider locating permanent facilities makes it difficult to stipulate a maximum distance from the port of entry, that diversity also makes it difficult to stipulate a minimum distance from existing horse populations. Therefore, we are not including in this reproposal a requirement that a permanent, privately owned horse quarantine facility must be located at least one-half mile from any premises holding livestock or horses from this reproposal, and we have indicated in this reproposal that the location would simply have to be approved by the Administrator in advance based on consideration of whether the site would put the horses in a position that could result in the transmission of communicable diseases to domestic horses.

Construction

Proposed requirements for facility construction would be contained in § 93.308(c)(3)(ii). We are proposing to require that the facility be of sound construction, in good repair, and properly designed to prevent the escape of horses from quarantine. The facility would be required to have the capacity to receive and house shipments of horses as lots on an ''all-in, all-out'' basis, whereby separate lots could be received and housed without contact with any other lots being quarantined at the facility.

We would also require that the facility be enclosed by a security fence of sufficient height and design to prevent unauthorized persons, horses, and other animals from outside the facility from having contact with horses quarantined in the facility. One commenter on the July 2002 proposed rule questioned the need for a security fence, stating that sound horse fencing should be used and that the entrance should be gated to prevent public access in lieu of a security fence. However, the fence enclosing the facility is intended to ensure not only that horses do not escape quarantine but also to prevent the unauthorized entry of persons, horses, and other animals. Sound horse fencing would not provide adequate protection against unauthorized entry.

We would also require that all entryways into the nonquarantine area of the facility be equipped with a secure and lockable door. Further, while horses are in quarantine, all access to the quarantine area for horses would have to be from within the building, and each such entryway to the quarantine area would have to be equipped with a series of solid self-closing double doors. Emergency exits would be permitted in the quarantine area, but such exits would have to be constructed so as to permit their being opened only from the inside of the facility in order to ensure the security of the horses in quarantine and the integrity of quarantine operations.

The July 2002 proposed rule included a requirement that entryways to each lot-holding area be equipped with a solid, lockable door. We are not including that provision in this reproposal, for the reasons discussed earlier in this document under the heading ''Changes in Our Approach With Respect to Lot-Holding Areas.''

We propose to require that the facility be constructed so that any windows or other openings in the quarantine area are double-screened with screening of sufficient gauge and mesh to prevent the entry or exit of insects and other vectors of diseases of horses and to provide ventilation sufficient to ensure the comfort and safety of all horses in the facility. The interior and exterior screens would have to be separated by at least 3 inches (7.62 cm). The screens would have to be easily removable for cleaning, but otherwise remain locked and secure at all times in a manner satisfactory to APHIS representatives to ensure the biological security of the facility.

In response to the July 2002 proposed rule, one commenter recommended that we amend the proposed specifications for windows or other openings in the quarantine area to require adequate ventilation. In this reproposal, we have included the requirement that the window screens would have to provide ventilation sufficient to ensure the comfort and health of all horses in the facility. We believe this language will ensure that windows in permanent facilities provide sufficient ventilation to prevent horses from becoming uncomfortable or suffering injury for that reason.

The entire facility, including its stalls and hallways, would have to have adequate lighting to ensure that horses are moved and kept safely and that permanent facility employees can safely do their work.

Proposed paragraph § 93.308 (c)(3)(ii)(E) would provide that a facility must have separate loading docks for receiving and releasing animals and for general receiving and pickup, unless a single dock used for both purposes is cleaned and disinfected after each use

according to the procedures set out in proposed paragraph § 93.308(c)(4)(iv)(F). That paragraph states that if the facility has a single loading dock, the loading dock would have to be immediately cleaned and disinfected after each use under the oversight of an APHIS representative with a disinfectant authorized in 9 CFR part 71 or otherwise approved by the Administrator. (Disinfectants are currently approved in 9 CFR part 71 under §§ 71.10, 71.11, and 71.12.)

The July 2002 proposed rule would have required that the facility have two separate loading docks. One would have been part of the quarantine area and would have been used for receiving and releasing horses, and one would have been part of the nonquarantine area and would have been used for general receiving and pickup. One commenter on the July 2002 proposed rule suggested that separate docks would be unnecessary; if a single dock were properly cleaned and disinfected after each use, the facility would achieve adequate protection against the risk that communicable diseases of horses might be transmitted. We agree with this comment and have modified the July 2002 proposed rule as suggested by the commenter. We believe this proposed requirement would adequately protect against the transmission of communicable diseases of horses while providing facility owners with greater flexibility.

We would require that the facility be constructed so that the floor surfaces with which horses have contact in the facility are nonslip and wear-resistant. All floor surfaces with which the horses, their excrement, or discharges have contact would have to provide for adequate drainage. All floor and wall surfaces with which the horses, their excrement, or discharges have contact would have to be impervious to moisture and be able to withstand frequent cleaning and disinfection without deterioration. Ceilings and wall surfaces with which the horses, their excrement, or discharges do not have contact would have to be able to withstand cleaning and disinfection between shipments of horses. The cleaning and disinfection of all of these surfaces would help ensure that disease agents would not be spread from one lot of horses to another. We would further require that surfaces with which the horses could have contact must not have any sharp edges that could cause injury to the horses.

The July 2002 proposed rule would have additionally required floor surfaces to have drains of at least 8 inches in diameter. One commenter suggested that it was unnecessary for us to specify the required diameter for the floor drains, since the proposed rule prescribed that all floor surfaces must provide for adequate drainage. We agree that it would be better to allow facility designers flexibility to achieve the adequate drainage requirement, and we are not including a specific diameter requirement for the floor drains in these facilities in this reproposal.

In proposed § 93.308(c)(3)(ii)(G), we would require that the stalls in which horses are held be large enough to allow each animal to make normal postural and social adjustments (including turning around and making way for other humans or horses) with adequate freedom of movement. Horses that do not have adequate space for movement could be at risk for poor conditioning due to lack of movement, malnutrition due to refusal to eat, rapid weight loss, increased stress, depression, or abnormal behavior patterns. These could increase the likelihood of the horses exhibiting clinical symptoms of disease or, if disease is present, transmitting or becoming infected with disease. The stall size requirement would also allow the stalls to be cleaned more easily by facilitating access to the stalls for quarantine facility personnel.

To help prevent transmission of disease between horses in permanent facilities, we would require that the aisleways used by horses within the quarantine area be wide enough to provide for safe movement of horses, including allowing horses to turn around in the aisleway, to prevent horses in facing stalls from coming into contact with horses in the aisleway, and to adequately ventilate the stalls. Narrow aisleways can lead to injury to horses and personnel and can allow direct physical contact between horses, which could facilitate the spread of disease.

The facility would have to be constructed so that different lots of horses held at the facility at the same time would be separated by physical barriers in such a manner that horses in one lot could not have physical contact with horses in another lot or with the excrement or discharges of horses in another lot. In addition, we would require that permanent facilities include stalls capable of isolating any horses exhibiting signs of illness. This provision would help ensure that horses infected with or exposed to disease do not spread the disease or expose other horses in the facility to the disease.

To prevent dissemination of disease via persons at the facility, we are proposing to require that the facility contain showers for use before entering and after exiting the quarantine area. A shower would also be needed at the entrance to the necropsy area if necropsies will be conducted onsite. (The proposed requirements for the necropsy area are described in greater detail later in this document.) We would also require that a clothes-storage and clothes-changing area be provided at each end of each shower area, and that there be one or more receptacles near each shower so that clothing that has been worn into the quarantine area can be deposited in a receptacle prior to entering the shower.

The July 2002 proposed rule would have required that the facility have showers at the entrance to each lot-holding area in a facility in which it is not possible to move to any lot-holding area except by first passing through another lot-holding area. It would also have required that all persons granted access to the quarantine area shower before entering a lot-holding area if previously exposed from access to another lot-holding area. This reproposal removes these proposed requirements, for the reasons discussed earlier in this document under the heading ''Changes in Our Approach With Respect to Lot-Holding Areas.''

Because of the need for APHIS representatives assigned to a permanent facility to examine horses and draw samples for testing, we would require that permanent facilities contain adequate space for these purposes and that the space include equipment to provide for the safe inspection of horses. In this reproposal, we are also proposing to require that the space provided to conduct examinations and testing include a refrigerator-freezer in which to store samples, which would facilitate conducting disease tests. The facility would have to include adequate storage space for the necessary equipment and supplies, work space for preparing and packaging samples for mailing, and storage space for duplicate samples. We would further require that the facility include a secure, lockable office space with enough room to contain a desk, chair, and filing cabinet for APHIS use.

Proposed § 93.308(c)(3)(ii)(L) would require that the facility either have a necropsy area or designate an alternate facility for conducting necropsies. A necropsy area would be necessary to perform post mortem inspection of horses that die in the permanent facility and to collect samples for laboratory diagnosis. These actions would be needed to determine whether the death of a horse was associated with a disease, or if it was caused by other factors, such as colic or physical injury.

If the facility has a necropsy area, it would have to be of sufficient size to perform necropsies on horses and be equipped with adequate lighting, hot and cold running water, a drain, a cabinet for storing instruments, a refrigerator-freezer for storing specimens, and an autoclave to sterilize veterinary equipment. If the facility does not have such an area, it would have to specify an alternate facility at which a suitable necropsy area is available, a route from the quarantine facility to the alternate facility's necropsy area, and the safeguards that will be in place to ensure that communicable diseases of horses are not spread during transit. This alternate facility and transport methodology would have to be approved by the Administrator under the procedures for requesting variances in these proposed regulations for permanent facilities as outlined in § 93.308(c)(6). This provision would require the operator to submit a request for a variance from the requirements for the construction of the facility prior to approval of the facility; because facilities would generally be required to have a necropsy area onsite, a request to designate an alternate facility for necropsies would be a request for a variance from the facility construction requirements.

If a facility did not have either a necropsy area that met the requirements of proposed § 93.308(c)(3)(ii)(L) or an alternate facility approved under the variances provision in proposed § 93.308(c)(6), it would not be approved.

The July 2002 proposed rule did not provide for the use of an alternative facility to perform necropsies. Three commenters asserted that requiring the construction of a necropsy area onsite at a permanent facility would be excessively costly, since the necropsy area would be expected to be used only rarely. Two commenters expressed a desire to designate an alternate facility at which necropsies and carcass incineration could be performed if necessary. We agree that, if carried out with the proper safeguards and notification, an alternate facility for necropsies could be used, and we have added provisions for designating an alternate facility, as described above. We believe that this change to the July 2002 proposed rule will ensure that biological security is maintained while allowing owners and operators some flexibility in design and construction of permanent, privately owned horse quarantine facilities.

These commenters also stated that the construction of a carcass incinerating facility should not be required; however, neither the July 2002 proposed rule nor this reproposal would require the construction of a carcass incinerating facility, but instead would require that the facility have the capability to dispose of carcasses safely and without spreading disease.

We are also proposing to require that the facility have sufficient storage space for equipment and supplies used in quarantine operations. Storage space would have to include separate, secure storage for pesticides and for medical and other biological supplies, as well as a separate vermin-proof storage area for feed and bedding, if feed and bedding are to be stored at the facility.

We are proposing to require that separate storage space be provided for each lot-holding area for any reusable equipment and supplies that are not disinfected after each use in accordance with 9 CFR part 71. The July 2002 proposed rule included a provision that each lot-holding area have separate storage space for equipment and supplies; we are not including this requirement in this reproposal, for the reasons discussed earlier in this document under the heading ''Changes in Our Approach With Respect to Lot-Holding Areas.''

We are proposing to require that the facility have an area for washing and drying clothes, linens, and towels and an area for cleaning and disinfecting equipment used in the facility. The facility would also have to include a work area for the repair of equipment. These areas are essential to ensure the continuity of quarantine operations.

The facility would have to have permanent restrooms in both the quarantine and nonquarantine areas of the facility so that persons do not need to leave or enter the quarantine area simply to use a restroom. Leaving the quarantine area would necessitate the person showering prior to entering the nonquarantine area, and then again upon reentering the quarantine area.

The July 2002 proposed rule included a provision that the facility have an area within the quarantine area for breaks and meals in order to eliminate the need for workers to leave the quarantine area for breaks. One commenter on the July 2002 proposed rule opposed this requirement, stating that a break area in the quarantine area would not play any role in providing biological security and should not be mandatory. We agree with this comment; additionally, we recognize that, unlike use of the restroom, movement into and out of the quarantined area for breaks could be planned to some extent. Therefore, we have removed the break area requirement from this reproposal.

We would also require that the facility be constructed with an air handling system capable of controlling and maintaining the ambient temperature, air quality, humidity, and odor at levels that are not injurious or harmful to the health of horses in quarantine. We would prohibit air supplied to the quarantine areas from being recirculated or reused for other ventilation needs. Further, air handling systems for quarantine areas would have to be separate from air handling systems for other operational and administrative areas of the facility in order to ensure that air from the quarantine areas is not diverted into nonquarantine areas of the facility.

The July 2002 proposed rule would have specifically required the facility to have a heating, ventilation, and air conditioning (HVAC) system. In this reproposal, rather than refer to an HVAC system, we refer to an ''air handling system.'' This change is intended to indicate that any air handling system may be used provided that it is capable of controlling and maintaining the ambient temperature, air quality, humidity, and odor at levels that are not injurious or harmful to the health of horses in quarantine. In some cases, an HVAC system may be necessary to fulfill this requirement; the less specific language, however, provides us with the flexibility to decide that matter on a case-by-case basis.

The July 2002 proposed rule would have required that each lot-holding area within the quarantine facility have its own separate HVAC system. For the reasons discussed earlier in this document under the heading ''Changes in Our Approach With Respect to Lot-Holding Areas,'' this reproposal would require that the air handling system be adequate to ensure that there is no cross-contamination of air between the separate lot-holding areas. This would provide protection against transmission of communicable diseases of horses without placing an undue burden on facility operators.

One commenter maintained that if the necropsy room is enclosed, it should have a separate air handling system to prevent the possible transmission of disease from carcasses to live horses.

As discussed above, air inside the quarantine area would not be recirculated, but rather ventilated directly to the outside; thus, any airborne disease agents would be vented from inside the quarantine area. Therefore, we believe that requiring a separate air handling system for the necropsy area would not appreciably enhance the biological security at quarantine facilities.

The facility, including the lot-holding areas, would have to be equipped with a fire alarm voice communication system so that personnel working in those areas can be readily warned of any potential emergency and can warn other personnel.

The July 2002 proposed rule would have required that the facility also have a television monitoring system or other arrangement sufficient to provide a full view of the quarantine area or areas, excluding the clothes-changing area. One commenter questioned the necessity of the television monitoring system given that the proposed rule also would have required that a full-time security service monitor the facility or that an electronic alarm system be used to indicate the entry of unauthorized persons into the facility. The proposed requirement for a television monitoring system was intended to facilitate surveillance within the quarantine facility, so that any persons attempting to gain unauthorized access could be detected. We believe the commenter is correct in stating that the television monitoring system would be unnecessary given the other proposed requirements, and we have not included a requirement for a television monitoring system in this reproposal.

The facility would also have to have a communication system between the nonquarantine and quarantine areas of the facility. Such a system would allow persons working in the quarantine area to communicate with persons working in the nonquarantine area and vice versa without moving from one area to the other.

Sanitation

To ensure that proper animal health and biological security measures are observed, proposed § 93.308(c)(3)(iii) would require that permanent facilities have the equipment and supplies necessary to maintain the facility in clean and sanitary condition, including pest control equipment and supplies and cleaning and disinfecting equipment with adequate capacity to disinfect the facility and equipment.

We would require that any reusable equipment and supplies that are not disinfected after each use in accordance with 9 CFR part 71 be kept separately for each lot of horses. The July 2002 proposed rule would have required that facilities keep separate equipment and supplies for each lot of horses; we are not including this requirement in this reproposal for the reasons discussed earlier in this document under the heading ''Changes in Our Approach With Respect to Lot-Holding Areas.''

Equipment and supplies to be used in the quarantine area would have to be maintained separately from equipment and supplies used in the nonquarantine area.

We would require facilities to maintain a supply of potable water adequate to meet all watering and cleaning needs at the facility. We would require that water faucets for hoses be located throughout the facility to ensure that personnel would not need to drag hoses across areas that have already been cleaned and disinfected. We would also require that an emergency supply of water for horses in quarantine be maintained at the facility.

Facilities would also need to maintain a stock of disinfectant authorized in 9 CFR part 71, or otherwise approved by the Administrator, sufficient to disinfect the entire facility.

We would also require permanent facilities to have the capability to dispose of wastes, including manure, urine, and used bedding, by means of burial, incineration, or public sewer. Facilities would have to handle other waste material in a manner that minimizes spoilage and the attraction of pests and would have to dispose of the waste material by incineration, public sewer, or other preapproved manner that prevents the spread of disease. Disposal of wastes would have to be carried out under the oversight of APHIS representatives.

We would further require permanent facilities to have the capability to dispose of horse carcasses in a manner approved by the Administrator and under conditions that minimize the risk of disease spread from carcasses. This requirement is necessary to prevent the dissemination of any disease agents that may be present in horse carcasses.

For incineration to be carried out at the facility, the facility would have to have incineration equipment that is detached from other facility structures and is capable of burning animal waste and refuse. We would require the incineration site to include an area sufficient for solid waste holding. Incineration could also take place at a local site away from the facility premises. Furthermore, we would require all incineration activities to be carried out under the direct oversight of APHIS representatives, even if conducted off-site.

We would require the facility to have the capability to control surface drainage and effluent into, within, and from the facility in a manner that prevents the spread of disease into, within, or from the facility. If the facility was approved to handle more than one lot of horses at the same time, the drainage system would have to be adequate to ensure that there would be no cross-contamination between lot-holding areas.

The July 2002 proposed rule would have required that each lot-holding area have a separate drainage system to prevent cross-contamination. We have modified this requirement in this reproposal for reasons discussed earlier in this document under the heading ''Changes in Our Approach With Respect to Lot-Holding Areas.'' We believe this changed requirement would provide protection against transmission of communicable diseases of horses without placing an undue burden on facility operators.

Security

Proposed § 93.308(c)(3)(iv) would require that the facility and premises be kept locked and secure at all times to ensure the integrity of quarantine operations. We would also require the facility and premises to have signs indicating that the facility is a quarantine area and no visitors are allowed.

The facility and premises would also have to be guarded at all times by one or more representatives of a bonded security company or, alternatively, would have to have an electronic security system that would indicate the entry of unauthorized persons into the facility.

We would require that such an electronic security system be coordinated either through or with the local police so that the quarantine facility is monitored whenever APHIS representatives are not at the facility. We would also require that such an electronic security system be of the ''silent type'' and must be triggered to ring at the monitoring site and not at the facility. The electronic security system would have to be approved by Underwriter's Laboratories. We would also require that the operator provide written instructions to the monitoring agency stating that the police and a representative of APHIS designated by APHIS must be notified by the monitoring agency if the alarm is triggered. The operator would be required to submit a copy of those instructions to the Administrator. The operator of the facility would be required to notify the designated APHIS representative whenever a breach of security occurs or is suspected of having occurred. Further, in the event that disease is diagnosed in quarantined horses, the Administrator could require the operator to have the facility guarded by a bonded security company in a manner that the Administrator deems

necessary to ensure the biological security of the facility.

In response to the July 2002 proposed rule, one commenter stated that the requirement that a representative of a security company be present at the facility at all times would not ensure the safety of the horses inside the barns, and that the requirement should be eliminated for that reason. The purpose of having a representative of a bonded security company (or, alternatively, an electronic security system) is not only to ensure the safety of the horses but also to ensure that no unauthorized persons enter the facility. Preventing unauthorized persons from accessing the facility is essential to providing quarantine security.

We would require that the operator of the facility furnish a telephone number or numbers to APHIS at which the operator or his or her agent can be reached at all times while horses are in quarantine.

We would also provide that APHIS may place APHIS seals on any or all entrances and exits of the facility when determined necessary by APHIS and take all necessary steps to ensure that such seals are broken only in the presence of an APHIS representative. In the event that someone other than an APHIS representative breaks such seals, we would consider the act a breach in security, and APHIS representatives would make an immediate accounting of all horses in the facility. If we determine that a breach in security has occurred, we may extend the quarantine period for horses as long as necessary to ensure that the horses are free of communicable diseases.

These proposed security requirements are unchanged from our July 2002 proposal.

Operating Procedures

APHIS Oversight

Proposed requirements regarding APHIS oversight would be contained in § 93.308(c)(4)(i).

The quarantine of horses at the facility would be subject to oversight by APHIS representatives, who could include one or more veterinarians and other professional, technical, and support personnel who are employed by APHIS and authorized to perform the services required by the regulations and the compliance agreement. Unlike temporary facilities, which are inspected on a regular basis by an APHIS veterinarian, a permanent facility would have at least one APHIS representative overseeing the care of all horses in quarantine during normal working hours. Depending on the size of the facility and the number of horses present, additional APHIS veterinarians and animal health technicians could be necessary to ensure adequate oversight of the horses in quarantine. The deployment of APHIS representatives to oversee and provide other professional, technical, and support services at a quarantine facility would be determined by the Administrator.

If, for any reason, the operator fails to properly care for, feed, or handle the quarantined horses as required under the regulations, or fails to maintain and operate the facility as required under the regulations, APHIS representatives would furnish such services or make arrangements for the sale or disposal of quarantined horses at the quarantine facility owner's expense.

Personnel

Proposed requirements concerning personnel would be contained in § 93.308(c)(4)(ii).

We would require the operator of the facility to provide adequate personnel to maintain the facility and care for the horses in quarantine, including attendants to care for and feed the horses, and other personnel to maintain, operate, and administer the facility.

We would also require that the operator provide APHIS with a list of employees and other personnel assigned to work at the facility. The list would have to include the names, current residential addresses, and employee identification numbers of employees and other personnel. We would require that, when the operator wishes to grant access to the facility to persons who have not previously had access to it, the operator update the list prior to such persons having access to the quarantine facility. These requirements are necessary to ensure that APHIS has knowledge of, and can identify, all persons working at the facility.

In conjunction with the above requirements, we would require the operator to provide APHIS with signed statements from each employee and any other personnel hired by the operator and working at the facility in which the person agrees to comply with proposed § 93.308(c) of the regulations, other applicable provisions of 9 CFR part 93, all terms of the compliance agreement, and any related instructions from APHIS representatives pertaining to quarantine operations, including contact with animals both inside and outside the facility.

Authorized Access

Proposed requirements regarding access would be contained in § 93.308(c)(4)(iii).

We are proposing to grant access to the quarantine facility premises as well as inside the quarantine facility only to APHIS representatives and authorized employees and other personnel of the operator assigned to work at the facility. All other persons would be prohibited from the premises unless specifically granted access by the overseeing APHIS representative. Any visitors granted access would be required to be accompanied at all times by an APHIS representative while on the premises or in the quarantine area of the facility.

Sanitary Requirements

Under proposed § 93.308(c)(4)(iv), all facility employees and other personnel, as well as any other person granted access to the quarantine area, would have to:

- Shower when entering and leaving the quarantine area;
- Shower when leaving the necropsy area if a necropsy is in the process of being performed or has just been completed, or if any portion of the examined animal remains exposed;
- Wear clean protective work clothing and footwear upon entering the quarantine area;
- Wear disposable gloves when handling sick horses, and then wash hands after removing gloves; and
- Change protective clothing, footwear, and gloves when they become soiled or contaminated.

The July 2002 proposed rule would have required that persons granted access to quarantine areas in a facility shower before entering a lot-holding area if previously exposed from access to another lot-holding area. It would also have required that persons granted access to the quarantine area not have contact with any horses in the facility other than the lot or lots of horses to which the person would be assigned or granted access. For reasons discussed earlier in this document under the heading ''Changes in Our Approach With Respect to Lot-Holding Areas,'' we are not including these requirements in this reproposal.

The July 2002 proposed rule would also have required that no person granted access to the quarantine area have contact with any horses outside the quarantine facility for at least 7 days after the last contact with the horses in quarantine. One commenter suggested retaining the requirement only for visitors to the quarantine area and shortening the length of time from 7 to 5 days to make the requirement consistent with that of the Foreign Animal Diagnostic Disease Laboratory operated by APHIS. This commenter further stated that the APHIS

representative at the facility, authorized employees, other personnel of the operator assigned to work at the facility, and veterinary practitioners who enter the facility to provide emergency care should be exempt from this requirement altogether provided the other sanitary requirements in the proposed rule, such as showering when entering and exiting the quarantine area and changing clothes when entering and exiting the quarantine area, are met. Two commenters stated that such a requirement should be unnecessary for any visitors if the other sanitary requirements are met.

We agree with the latter commenters that restrictions on contact with horses outside the quarantine facility should not be necessary for any visitors to a permanent facility, provided that all visitors fulfill the sanitary requirements of this proposed rule. We are, therefore, not including in this reproposal any restrictions on contact with horses outside the quarantine facility for visitors to the quarantine facility.

We would require that the operator provide clean, protective clothing to persons granted access to the quarantine area. The July 2002 proposed rule would have required that the operator provide clean, protective clothing to be worn when persons provided access to the quarantine area move from one lot of horses to another lot of horses. For the reasons discussed earlier in this document under the heading ''Changes In Our Approach With Respect to Lot-Holding Areas,'' we have revised this proposed requirement to refer to the quarantine area rather than to lot-holding areas.

The operator or the operator's designated representative would also be responsible for the handling, washing, and disposal of soiled and contaminated clothing worn within the quarantine facility in a manner approved by the overseeing APHIS representative as adequate to preclude transmission of any animal disease agent from the facility. Work clothing worn into the quarantine area would be required to be washed at the end of each workday. Used footwear would either be left in the clothes changing area or cleaned with hot water (148 °F minimum) and detergent and disinfected as directed by an APHIS representative.

The July 2002 proposed rule would have required that work clothing worn into each lot-holding area be collected and kept in a bag until the clothing is washed at the end of each workday. For reasons discussed earlier in this document under the heading ''Changes in Our Approach With Respect to Lot-Holding Areas,'' we have revised this proposed requirement to refer to the quarantine area rather than to lot-holding areas.

We would require that all equipment (including tractors) be cleaned and disinfected prior to being used in a quarantine area of the facility with a disinfectant authorized in 9 CFR part 71 or otherwise approved by the Administrator. The equipment would have to remain dedicated to the facility for the entire quarantine period in order to prevent the spread of disease agents outside the facility. Any equipment used with quarantined horses (e.g., halters, floats, feed and water buckets) would have to remain dedicated to that particular lot of quarantined horses for the duration of the quarantine period or be cleaned and disinfected before coming in contact with horses from another lot to ensure that no cross contamination occurs. Prior to its use on another lot of horses or its removal from the quarantine premises, any equipment would have to be cleaned and disinfected to the satisfaction of an APHIS representative.

The proposed regulations would also require that any vehicle, before entering or leaving the quarantine area of the facility, be cleaned and disinfected under the oversight of an APHIS representative within a time period authorized by the APHIS representative and with a disinfectant authorized in 9 CFR part 71 of the regulations or otherwise approved by the Administrator.

We would also require that, if the facility has a single loading dock instead of two as described earlier in this document, the loading dock would have to be cleaned and disinfected after each use under the oversight of an APHIS representative within a time period authorized by the APHIS representative and with a disinfectant authorized in 9 CFR part 71 of the regulations or otherwise approved by the Administrator.

Further, we would require the area of the facility in which a lot of horses has been held to be thoroughly cleaned and disinfected, with a disinfectant authorized in 9 CFR part 71, under the oversight of an APHIS representative upon release of the horses before a new lot of horses is placed in that area of the facility. This requirement is necessary to ensure that horses entering quarantine are not exposed to disease agents present in the previous lot of horses.

Handling of the Horses in Quarantine

Under the proposed regulations, horses that are quarantined in private facilities would have to undergo the appropriate quarantine specified in § 93.308(a) and would be subject to any other applicable regulations in title 9 of the Code of Federal Regulations. For the purposes of quarantine operations, private facilities would operate no differently than Federal horse quarantine facilities.

Each lot of horses to be quarantined would have to be placed in the facility on an ''all-in, all-out'' basis. Under this requirement, no horse could be taken out of the lot while it is in quarantine, except for diagnostic purposes or as provided in § 93.308(a)(4), and no horse could be added to the lot while the lot is in quarantine.

The regulations would require that the facility provide sufficient feed and bedding that is free of vermin and that is not spoiled for the horses in quarantine. Feed and bedding would have to originate from an area that is not listed in 9 CFR part 72 as an area quarantined for splenetic or tick fever.

We would prohibit the breeding of horses and the collection of germplasm from horses during the quarantine period. The July 2002 proposed rule would have prohibited the breeding of horses or the collection of germplasm from horses during the quarantine period unless necessary for a required import testing procedure. Because there are currently no import testing procedures that require the breeding of horses or the collection of germplasm from horses, we have removed that exception from this reproposal.

We propose to require that horses in quarantine be subjected to such tests and procedures as directed by the overseeing APHIS representative to determine whether they are free from communicable diseases of horses.

We would require that any death or suspected illness of horses in quarantine be reported immediately to the overseeing APHIS representative so that appropriate measures may be taken to ensure the health of the other horses in quarantine. The affected horses would have to be disposed of as the Administrator may direct or, depending on the nature of the disease, would have to be cared for as directed by the overseeing APHIS representative.

The regulations would provide that quarantined horses requiring specialized medical attention or additional post-mortem testing may be transported off the quarantine site, if authorized by the overseeing APHIS representative. In such situations, a second quarantine site would have to be established to house the horses at the facility of destination (e.g., veterinary teaching hospital), and the overseeing APHIS representative could extend the quarantine period for that horse and for

its lot until the results of any outstanding tests or postmortem results are received.

Further, if we determine that a horse is infected with or exposed to a communicable disease of horses, we would require that arrangements for the final disposition of the infected or exposed horse be accomplished within 10 days of the date that the importer is notified by the overseeing APHIS representative that the horse has been refused entry into the United States. We would require the horses to be disposed of under the direct oversight of APHIS representatives. We would require the operator to have a preapproved contingency plan for the disposal of all horses housed in the facility prior to issuance of an import permit. This requirement is essential to ensure that diseased horses can be disposed of without posing a risk of disseminating diseases outside the quarantine facility.

In the July 2002 proposed rule, we would have allowed horses in quarantine to be vaccinated. One commenter recommended that we prohibit vaccinations entirely in permanent, privately owned horse quarantine facilities. Vaccinations performed on horses while they are in quarantine can alter the immune system of the horses and therefore affect diagnostic serology, potentially producing inaccurate results in response to the diagnostic tests administered in quarantine. We agree and have therefore added a new paragraph § 93.308(c)(4)(v)(I) in this reproposal specifically prohibiting vaccination of horses in these facilities.

Records

Under proposed § 93.308(c)(4)(vi), it would be the facility operator's responsibility to maintain current daily records to record the entry and exit of all persons entering and leaving the quarantine facility. We would require the operator or the operator's designated representative to hold the daily records, along with any records kept by APHIS and deposited with the operator, for at least 2 years following the date of release of the horses from quarantine and to make such records available to APHIS representatives upon request.

Environmental Requirements

Under proposed § 93.308(c)(5), if APHIS determines that a privately operated quarantine facility does not meet all applicable local, State, and Federal environmental regulations, APHIS reserves the right to deny or suspend approval of the facility until appropriate remedial measures have been applied. This requirement is necessary to ensure that APHIS-approved facilities meet all applicable waste disposal and other environmental quality standards.

Variances

Under proposed § 93.308(c)(6), the Administrator may grant variances to the requirements relating to location, construction, and other design features of the physical facility, as well as to sanitation, security, operating procedures, recordkeeping, and other provisions of the regulations, but only if the Administrator determines that the variance causes no detrimental impact to the overall biological security of the quarantine operation. The operator of a permanent facility would have to submit a request for a variance from the requirements for the construction of a facility to the Administrator in writing prior to approval of the facility; for a variance from the requirements for the operation of a facility, the operator would have to submit a request to the Administrator in writing at least 30 days in advance of the arrival of horses to the facility. Any variance would also have to be expressly provided for in the compliance agreement.

In conjunction with these changes, we would also make editorial changes to § 93.310 to update the regulations and make them easier to understand.

We believe that these proposed regulations would ensure that permanent facilities could operate without posing a risk of foreign animal disease introduction and allow U.S. horse importers another option for quarantining imported horses. We welcome public comment on the proposed regulations.

Executive Order 12866 and Regulatory Flexibility Act

This proposed rule has been reviewed under Executive Order 12866. The rule has been determined to be significant for the purposes of Executive Order 12866 and, therefore, has been reviewed by the Office of Management and Budget.

In accordance with 5 U.S.C. 603, we have performed an initial regulatory flexibility analysis, which is set out below, regarding the potential economic costs and benefits of this rule and its potential economic effects on small entities. Based on the information we have, there is no basis to conclude that this rule will result in any significant economic effect on a substantial number of small entities. However, we do not currently have all of the data necessary for a comprehensive analysis of the effects of this proposed rule on small entities. Therefore, we are inviting comments on potential effects.

This proposed rule would allow the establishment and operation, under APHIS oversight, of permanent, privately owned quarantine facilities for horses imported into the United States. Currently, the regulations set standards only for temporary, privately owned quarantine facilities for horses. Such temporary facilities are used to quarantine horses imported for a particular event or purpose. APHIS has also authorized the operation of one permanent, privately owned and operated animal quarantine facility in Los Angeles County, CA.

Under the Animal Health Protection Act, specifically 7 U.S.C. 8303, the Secretary is authorized to promulgate regulations requiring that any animal imported or entered into the United States be raised or handled under post-importation quarantine conditions by or under the supervision of the Secretary for the purpose of determining whether the animal is or may be affected by any pest or disease of livestock.

The horse industry in the United States contributes $39 billion annually to the U.S. gross domestic product via direct spending, and it supports 1.4 million full-time equivalent jobs. The horse industry pays approximately $1.9 billion in taxes annually to all levels of government. Approximately 1.96 million people own the estimated 9.2 million horses in the United States.

Trade in live horses between the United States and other countries has increased considerably, both recently and over the past decade. Even though the United States is a net exporter of live horses, imports of live horses have increased dramatically. Specifically, from 2001 to 2003, U.S. imports of live horses increased by 54 percent in number (from 27,236 horses to 41,960 horses). During the 3-year period 2001–2003, the number of U.S. live horse imports averaged 39,434 annually, 134 percent more than the annual average for the 1991–1993 3-year period. In 2003, the value of U.S. live horse imports was $259.3 million.

The increased demand for importing horses in the United States has resulted in an increased demand for import quarantine services. As can be seen from the data above, horses play an important role in the international trade of the United States.

Effects on Small Entities

We have identified two types of entities that could be affected by implementation of this rule: The existing permanent, privately owned

quarantine facility and horse importers or farmers.

Quarantine Facilities

According to Small Business Administration (SBA) criteria, a horse quarantine facility is considered a small entity if it has annual revenues of $6 million or less. The existing permanent, privately owned quarantine facility that operates in Los Angeles County, CA, is believed to be a small entity.

If this proposed rule is implemented, the operators of that quarantine facility may need to upgrade its facilities to be in compliance with the proposed requirements. If and when the facility is approved for operation under the proposed regulations, the cost of any needed renovations to the facility, as well as the costs associated with being in compliance with the proposed regulations, would likely be passed on to importers of horses who elect to use the facility to quarantine imported horses. Such a cost pass-through to the facility's users is likely to occur, at least in the short run, given the increased demand for quarantine services in the United States, the small number of Federal horse quarantine facilities currently in operation, and the fact that there are no other permanent, privately owned quarantine facilities operating at this time. Over the long term, the impact of the rule on the facility is less certain, given the possibility of additional—and potentially competing—quarantine facilities opening in the future. That only one or two additional quarantine facilities are expected to open in the next several years suggests that this action would not have a significant effect on the facility, even in the long run. Nevertheless, at this time, we are unable to determine the effect that implementation of this rule would have on the facility's business volume and revenue.

In response to the July 2002 proposed rule, one commenter objected to the proposed standards for permanent, privately owned horse quarantine facilities on the grounds that they would impose significant additional costs on the existing quarantine facility. The commenter cited decreasing demand for imported horses as grounds for fear that these significant additional costs could eventually result in a reduction of the total quarantine space available for imported horses, since the existing permanent, privately owned horse quarantine facility would likely exit the market and prospective owners of permanent horse quarantine facilities would be discouraged by the regulations from entering it.

As noted earlier in this document, the demand for import quarantine facilities for horses has risen in recent years, and in some cases the demand for quarantine services for horses has exceeded the space available at existing facilities. Most of the comments we received cited this increased demand and the resulting shortage of quarantine services as the reason for supporting our proposed standards for permanent, privately owned horse quarantine facilities. However, we cannot allow horses to be quarantined in privately owned facilities that are not constructed and operated in such a manner as to mitigate the risk of transmission of foreign animal diseases into the domestic horse population. We have determined that the standards set out in the proposed rule would ensure that permanent, privately owned horse quarantine facilities are constructed and operated properly.

In response to this comment, however, this reproposal provides additional time for the existing permanent, privately owned horse quarantine facility to comply with any requirements that may be established by a final rule. This deadline would be 1 year after the final rule takes effect. We have also made changes to substantive provisions in this reproposal that we expect would reduce the compliance costs associated with this rulemaking.

We continue to lack data of the kind that could be used in an economic analysis to assess the proposed rule's potential impact on the existing permanent, privately owned horse quarantine facility. We are inviting comments on such impacts, particularly estimates of compliance costs and impacts on revenue. This will allow us to better assess this proposal's potential impact.

Importers of Horses and Horse Farms

According to SBA criteria, a farm that keeps horses for breeding and has annual revenues of $750,000 or less is considered a small entity. According to the most recent Census of Agriculture data, average per-farm revenue for all U.S. equine farms in 2002 was $7,158, an indication that these farms are by and large small entities.

The establishment of standards for the approval of permanent, privately owned quarantine facilities for horses has the potential to make the import process easier and more timely while at the same time protecting against the introduction of communicable diseases of horses, a clear benefit for importers if the demand for, and worth of, live horse imports continues to increase. However, as discussed above, importers may be subject to higher fees and charges from the current quarantine facility or from new facilities that may open in the future.

Additional quarantine facilities could be expected to benefit brokers, and they may also have positive economic effects for horse owners who purchase horses, since increased competition from foreign imports may serve to depress domestic prices. However, any decline in domestic horse prices stemming from increased imports would have an adverse impact on domestic sellers.

Given the available data, it is not possible for us to predict the proposed rule's economic impact. Nevertheless, any increase in horse imports, which the rule would facilitate, should yield net benefits. This is because trade of a commodity generally increases social welfare. To the extent that consumer choice is broadened and the increased supply of the imported commodity leads to a price decline, gains in consumer surplus will outweigh losses in domestic producer surplus.[2] Although the rule's impact on domestic producers is uncertain, it is expected to provide benefits to consumers (domestic importers, brokers) that would exceed any potential losses to domestic producers. The net welfare effect for the United States of increased horse imports will be positive.

The additional number of horses that might be imported into the United States as a result of this proposed rule is not known. However, because the proposed rule is expected to result in the opening of only one or two additional quarantine facilities in the next several years, the expected benefits are likely to be small.

Alternatives Considered

This proposed rule would establish standards for the approval of permanent, privately owned quarantine facilities for horses. Alternatives to the proposed rule would be to either leave the regulations unchanged, or to require a different set of standards than is proposed. Leaving the regulations unchanged would be unsatisfactory, because it would perpetuate the current situation, *i.e.*, one which does not fully address the potential disease risks, and one which does not facilitate the importation of horses.

APHIS considers the proposed set of standards to be the minimum necessary to accomplish the rule's objectives. In this regard, we have made changes to

[2] Consumer surplus is the difference between the amount a consumer is willing to pay for a good and the amount actually paid. Producer surplus is the amount a seller is paid for the good minus the seller's cost.

substantive provisions in this reproposal that we expect would reduce the compliance costs associated with this rulemaking. This reproposal also provides additional time for the existing permanent, privately owned horse quarantine facility to comply with any requirements that may be established by a final rule. The deadline would be 1 year after the final rule takes effect.

Nevertheless, we invite public comment on the proposed rule, including any comments on the expected impacts for small entities and on how the proposed rule could be modified to reduce expected costs or burdens for small entities consistent with its objectives. Any comment suggesting changes to the proposed standards should be supported by an explanation of why the changes should be considered.

This proposed rule contains information collection requirements, which have been submitted for approval to the Office of Management and Budget (see ''Paperwork Reduction Act'' below).

Executive Order 12988

This proposed rule has been reviewed under Executive Order 12988, Civil Justice Reform. If this proposed rule is adopted: (1) All State and local laws and regulations that are inconsistent with this rule will be preempted; (2) no retroactive effect will be given to this rule; and (3) administrative proceedings will not be required before parties may file suit in court challenging this rule.

Paperwork Reduction Act

In accordance with section 3507(d) of the Paperwork Reduction Act of 1995 (44 U.S.C. 3501 *et seq.*), the information collection or recordkeeping requirements included in this proposed rule have been submitted for approval to the Office of Management and Budget (OMB). Please send written comments to the Office of Information and Regulatory Affairs, OMB, Attention: Desk Officer for APHIS, Washington, DC 20503. Please state that your comment refers to Docket No. APHIS–2006–0013. Please send a copy of your comment to: (1) Docket No. APHIS–2006–0013, Regulatory Analysis and Development, PPD, APHIS, Station 3A–03.8, 4700 River Road Unit 118, Riverdale, MD 20737–1238, and (2) Clearance Officer, OCIO, USDA, room 404–W, 14th Street and Independence Avenue, SW., Washington, DC 20250. A comment to OMB is best assured of having its full effect if OMB receives it within 30 days of publication of this proposed rule.

Because recent demand for quarantine services for horses exceeds the space available at existing facilities, we are proposing to allow the establishment of permanent, privately owned horse quarantine facilities if they meet requirements proposed in this document. Accomplishing this will necessitate the use of several information collection activities, including an application for facility approval, a compliance agreement explaining the conditions under which the facility must be operated, and a certification that the facility meets all applicable environmental regulations.

We are soliciting comments from the public (as well as affected agencies) concerning our proposed information collection and recordkeeping requirements. These comments will help us:

(1) Evaluate whether the proposed information collection is necessary for the proper performance of our agency's functions, including whether the information will have practical utility;

(2) Evaluate the accuracy of our estimate of the burden of the proposed information collection, including the validity of the methodology and assumptions used;

(3) Enhance the quality, utility, and clarity of the information to be collected; and

(4) Minimize the burden of the information collection on those who are to respond (such as through the use of appropriate automated, electronic, mechanical, or other technological collection techniques or other forms of information technology; *e.g.*, permitting electronic submission of responses).

Estimate of burden: Public reporting burden for this collection of information is estimated to average 0.78571 hours per response.

Respondents: Owners of approved permanent, privately owned horse quarantine facilities and applicants for approval.

Estimated annual number of respondents: 3.

Estimated annual number of responses per respondent: 4.666.

Estimated annual number of responses: 14.

Estimated total annual burden on respondents: 11 hours.

Copies of this information collection can be obtained from: Mrs. Celeste Sickles, APHIS's Information Collection Coordinator, at (301) 734–7477.

E-Government Act Compliance

The Animal and Plant Health Inspection Service is committed to compliance with the E-Government Act to promote the use of the Internet and other information technologies, to provide increased opportunities for citizen access to Government information and services, and for other purposes. For information pertinent to E-Government Act compliance related to this proposed rule, please contact Mrs. Celeste Sickles, APHIS's Information Collection Coordinator, at (301) 734–7477.

List of Subjects in 9 CFR Part 93

Animal diseases, Imports, Livestock, Poultry and poultry products, Quarantine, Reporting and recordkeeping requirements.

Accordingly, we propose to amend 9 CFR part 93 as follows:

PART 93—IMPORTATION OF CERTAIN ANIMALS, BIRDS, AND POULTRY, AND CERTAIN ANIMAL, BIRD, AND POULTRY PRODUCTS; REQUIREMENTS FOR MEANS OF CONVEYANCE AND SHIPPING CONTAINERS

1. The authority citation for part 93 would continue to read as follows:

Authority: 7 U.S.C. 1622 and 8301–8317; 21 U.S.C. 136 and 136a; 31 U.S.C. 9701; 7 CFR 2.22, 2.80, and 371.4.

2–3. Section 93.300 would be amended by revising the definition for *operator* and by adding, in alphabetical order, new definitions of *lot, lot-holding area, nonquarantine area, permanent, privately owned quarantine facility, quarantine area,* and *temporary, privately owned quarantine facility* to read as follows:

§ 93.300 Definitions.

* * * * *

Lot. A group of horses that, while held on a premises or conveyance, have had opportunity for physical contact with other horses in the group or with their excrement or discharges at any time during their shipment to the United States.

Lot-holding area. That area in a permanent, privately owned quarantine facility in which a single lot of horses is held at one time.

Nonquarantine area. That area in a permanent, privately owned quarantine facility that includes offices, storage areas, and other areas outside the quarantine area, and that is off limits to horses, samples taken from horses, and any other objects or substances that have been in the quarantine area during quarantine of horses.

Operator. A person other than the Federal Government who owns or manages and has responsibility for the services provided by a temporary, privately owned quarantine facility or a permanent, privately owned quarantine facility.

Permanent, privately owned quarantine facility. A facility that offers quarantine services for horses to the general public on a continuing basis and that is owned and operated by an entity other than the Federal Government (also permanent facility).

* * * * *

Quarantine area. That area in a permanent, privately owned quarantine facility that comprises all of the lot-holding areas in the facility and any other areas in the facility that horses have access to, including loading docks for receiving and releasing horses, and any areas used to conduct examinations of horses and take samples and where samples are processed or examined.

* * * * *

Temporary, privately owned quarantine facility. A facility that offers quarantine services for horses imported for a special event and that is owned and operated by an entity other than the Federal Government (also temporary facility).

* * * * *

4. Section 93.303 would be amended as follows:

a. By revising the heading of paragraph (e) to read as set forth below.

b. In paragraph (e), by removing the words ''provided by the importer'' and by adding the words ''privately owned'' before the word ''quarantine''.

§ 93.303 Ports designated for the importation of horses.

* * * * *

(e) *Ports for horses to be quarantined at privately owned quarantine facilities.*

* * *

* * * * *

§ 93.304 [Amended]

5. In § 93.304, paragraph (a)(1)(i), the first sentence would be amended by removing the words ''quarantine facility provided by the importer'' and adding the words ''privately owned quarantine facility'' in their place.

6. In § 93.304, paragraph (a)(2), the words ''of the regulations, horses intended for quarantine at a quarantine facility provided by the importer,'' would be removed, and the words ''or horses intended for quarantine at a privately owned quarantine facility'' would be added in their place.

7. In § 93.308, in paragraph (a), footnote 14 would be redesignated as footnote 13, paragraph (b) would be revised and a new footnote 14 would be added, and paragraph (c), including footnote 15, would be revised to read as follows:

§ 93.308 Quarantine requirements.

* * * * *

(b) *Temporary, privately owned quarantine facilities.* Horses presented for entry into the United States as provided in § 93.303(e) may be quarantined in temporary, privately owned quarantine facilities that meet the requirements of paragraphs (b)(1) and (2) of this section and that have been approved by the Administrator for a specific importation.

(1) *Approval.* Requests for approval and plans for proposed temporary facilities must be submitted no less than 15 days before the proposed date of entry of horses into the facility to APHIS, Veterinary Services, National Center for Import and Export, 4700 River Road Unit 39, Riverdale, MD 20737–1231. Before facility approval can be granted, a veterinary medical officer of APHIS must inspect the facility to determine whether it complies with the standards set forth in this section: *Provided, however,* that approval of any temporary facility and use of such facility will be contingent upon a determination made by the Administrator that adequate personnel are available to provide required services at the facility. Approval of any facility may be refused and approval of any quarantine facility may be withdrawn at any time by the Administrator, upon his or her determination that any requirements of this section are not being met. Before such action is taken, the operator of the facility will be informed of the reasons for the proposed action by the Administrator and afforded an opportunity to present his or her views. If there is a conflict as to any material fact, a hearing will be held to resolve the conflict. The cost of the facility and all maintenance and operational costs of the facility will be borne by the operator.

(2) *Standards and handling procedures.* The facility must be maintained and operated in accordance with the following standards:

(i) *Inspection.* Inspection and quarantine services must be arranged by the operator or his or her agent with the APHIS Veterinarian in Charge for the State in which the approved facility is located [14] no less than 7 days before the proposed date of entry of the horses into the quarantine facility.

(ii) *Physical plant requirements.*

(A) The facility must be located and constructed to prevent horses from having physical contact with animals outside the facility.

(B) The facility must be constructed only with materials that can withstand repeated cleaning and disinfection. Disinfectants authorized in 9 CFR part 71 must be used. All walls, floors, and ceilings must be constructed of solid material that is impervious to moisture. Doors, windows, and other openings of the facility must be provided with double screens that will prevent insects from entering the facility.

(iii) *Sanitation and security.*

(A) The operator must arrange for a supply of water adequate to clean and disinfect the facility.

(B) All feed and bedding must originate from an area not under quarantine because of splenetic or tick fever (see part 72 of this chapter) and must be stored within the facility.

(C) Upon the death of any horse, the operator must arrange for the disposal of the horse's carcass by incineration. Disposal of all other waste removed from the facility during the time the horses are in quarantine or from horses that are refused entry into the United States must be either by incineration or in a public sewer system that meets all applicable environmental quality control standards. Following completion of the quarantine period and the release of the horses into the United States, all waste may be removed from the quarantine facility without further restriction.

(D) The facility must be maintained and operated in accordance with any additional requirements the Administrator deems appropriate to prevent the dissemination of any communicable disease.

(E) The facility must comply with all applicable local, State, and Federal requirements for environmental quality.

(iv) *Personnel.*

(A) Access to the facility will be granted only to persons working at the facility or to persons specifically granted such access by an APHIS representative.

(B) The operator must provide attendants for the care and feeding of horses while in the quarantine facility.

(C) Persons working in the quarantine facility may not come in contact with any horses outside the quarantine facility during the quarantine period for any horses in the facility.

(v) *Handling of horses in quarantine.* Horses offered for importation into the United States that are quarantined in an approved temporary facility must be handled in accordance with paragraph (a) of this section while in quarantine.

(c) *Permanent, privately owned quarantine facilities.* Horses presented for entry into the United States as provided in § 93.303(e) may be

[14] The name and address of the Veterinarian in Charge in any State is available from APHIS, Veterinary Services, National Center for Import and Export, 4700 River Road Unit 39, Riverdale, MD 20737–1231.

quarantined in permanent, privately owned quarantine facilities approved by the Administrator as meeting the requirements of paragraphs (c)(1) through (c)(6) of this section.

(1) *APHIS approval.*

(i) *Approval procedures.* Persons seeking APHIS approval of a permanent, privately owned quarantine facility must write to the Administrator, c/o National Center for Import and Export, Veterinary Services, APHIS, 4700 River Road Unit 39, Riverdale, MD 20737–1231. The application letter must include the full name and mailing address of the applicant; the location and street address of the facility for which approval is sought; blueprints of the facility; a description of the financial resources available for construction, operation, and maintenance of the facility; the anticipated source or origin of horses to be quarantined, as well as the expected size and frequency of shipments; a contingency plan for horses needing emergency veterinary care; and a contingency plan for the disposal of all the horses capable of being housed in the facility.

(A) If APHIS determines that an application is complete and merits further consideration, the person applying for facility approval must enter into a service agreement with APHIS wherein the applicant agrees to pay the cost of all APHIS services associated with APHIS' evaluation of the application and facility. APHIS charges for the evaluation of the application and facility at hourly rates listed in § 130.30 of this chapter. This service agreement applies only to fees accrued during the application process. If the facility is approved by APHIS, facility owners must enter into a compliance agreement in accordance with paragraph (c)(2) of this section.

(B) Requests for approval must be submitted to APHIS at least 120 days prior to the date of application for local building permits. Requests for approval will be evaluated on a first-come, first-served basis.

(ii) *Criteria for approval.* Before a facility may operate as a permanent, privately owned quarantine facility for horses, it must be approved by APHIS. To be approved:

(A) The facility must meet all of the requirements of this section;

(B) The facility must meet any additional requirements that may be imposed by the Administrator in each specific case, as specified in the compliance agreement required under paragraph (c)(2) of this section, to ensure that the quarantine of horses in the facility will be adequate to determine their health status, as well as to prevent the transmission of diseases into, within, and from the facility; and

(C) The Administrator must determine that sufficient personnel, including one or more APHIS veterinarians and other professional, technical, and support personnel, are available to serve as APHIS representatives at the facility and provide continuous oversight over import quarantine operations and other technical services to ensure the biological security of the facility, if approved. This determination will be based on the expected size and frequency of shipments to the facility, as described in the application for approval of a permanent facility, as well as any other pertinent information in the application. APHIS will assign personnel to facilities requesting approval in the order that the facilities are approved. The Administrator has sole discretion on the number of APHIS personnel to be assigned to the facility.

(iii) *Maintaining approval.* To maintain APHIS approval, the operator must continue to comply with all the requirements of paragraph (c) of this section and the terms of the compliance agreement executed in accordance with paragraph (c)(2) of this section.

(iv) *Denial or withdrawal of approval.* Approval for a proposed privately owned quarantine facility may be denied or approval for a facility already in operation may be withdrawn at any time by the Administrator for any of the reasons provided in paragraph (c)(1)(iv)(C) of this section.

(A) Before facility approval is denied or withdrawn, the operator of the facility will be informed of the reasons for the proposed action by the Administrator and afforded an opportunity to present his or her views. If there is a conflict as to any material fact, APHIS will afford the operator, upon request, the opportunity for a hearing with respect to the merits or validity of such action.

(B) The Administrator may withdraw approval of an existing facility prior to a final determination in the hearing if the Administrator determines that such action is necessary to protect animal health or the public health, interest, or safety. Such withdrawal will be effective upon oral or written notification, whichever is earlier, to the operator of the facility. In the event of oral notification, APHIS will promptly give written confirmation to the operator of the facility. This withdrawal will continue in effect pending the completion of the hearing and any judicial review, unless otherwise ordered by the Administrator. In addition to withdrawal of approval for the reasons provided in paragraph (c)(1)(iv)(C) of this section, the Administrator will also automatically withdraw approval when the operator of any approved facility notifies the APHIS Veterinarian in Charge for the State in which the facility is located, in writing, that the facility is no longer in operation.[15]

(C) The Administrator may deny or withdraw approval of a permanent privately owned quarantine facility if:

(*1*) Any requirement of this section or the compliance agreement is not complied with; or

(*2*) The operator fails to remit any charges for APHIS services rendered; or

(*3*) The operator or a person responsibly connected with the business of the quarantine facility acts as a paid agent (broker) for the importation or subsequent sale of horses; or

(*4*) The operator or a person responsibly connected with the business of the quarantine facility is or has been found by a court of competent jurisdiction to have violated any law or regulation pertaining to the importation or quarantine of any animal; or

(*5*) The operator or a person responsibly connected with the business of the quarantine facility is or has been convicted of any crime involving fraud, bribery, or extortion or any other crime involving a lack of integrity needed for the conduct of operations affecting the importation of animals; or

(*6*) The approved quarantine facility has not been in use to quarantine horses for a period of at least 1 year.

(D) For the purposes of this section, a person is deemed to be responsibly connected with the business of the quarantine facility if such person has an ownership, mortgage, or lease interest in the facility's physical plant, or if such person is a partner, officer, director, holder, or owner of 10 percent or more of its voting stock, or is an employee in a managerial or executive capacity.

(v) *Approval for existing facilities.* Any permanent, privately owned quarantine facility operating under APHIS authorization at the time these regulations become effective must be approved by APHIS to continue quarantine operations by [*Insert date 1 year after effective date of final rule*] or else must cease horse quarantine operations.

(2) *Compliance agreement.*

(i) All permanent, privately owned quarantine facilities for horses must operate in accordance with a

[15] The name and address of the Veterinarian in Charge in any State is available from APHIS, Veterinary Services, National Center for Import and Export, 4700 River Road Unit 39, Riverdale, MD 20737–1231.

compliance agreement executed by the operator or his or her agent and the Administrator, and that must be renewed on an annual basis.

(ii) The compliance agreement must provide that:

(A) The facility must meet all applicable requirements of this section;

(B) The facility's quarantine operations are subject to the oversight of APHIS representatives;

(C) The operator agrees to be responsible for the cost of the facility; all costs associated with its maintenance and operation; all costs associated with the hiring of employees and other personnel to attend to the horses as well as to maintain and operate the facility; all costs associated with the care of quarantined horses, such as feed, bedding, medicines, inspections, testing, laboratory procedures, and necropsy examinations; and all APHIS charges for the services of APHIS representatives in accordance with this section and part 130 of this chapter; and

(D) The operator agrees to bar from the facility any employee or other personnel at the facility who fails to comply with paragraph (c) of this section or other provisions of this part, any terms of the compliance agreement, or related instructions from APHIS representatives;

(3) *Physical plant requirements.* The facility must meet the following requirements as determined by an APHIS inspection prior to admitting horses into the facility:

(i) *Location.* The quarantine facility must be located in proximity to a port authorized under § 93.303(e). The site and the specific routes for the movement of horses from the port to the site must be approved by the Administrator based on consideration of whether the site or routes would put the horses in a position that could result in the transmission of communicable diseases to domestic horses.

(ii) *Construction.* The facility must be of sound construction, in good repair, and properly designed to prevent the escape of quarantined horses. It must have adequate capacity to receive and house shipments of horses as lots on an ''all-in, all-out'' basis, whereby separate lots of horses can be received and housed without contact with any other lots being quarantined at the facility. The facility must include the following:

(A) *Perimeter fencing.* The facility must be surrounded by a security fence of sufficient height and design to prevent the entry of unauthorized people and animals from outside the facility and to prevent the escape of the horses in quarantine.

(B) *Entrances and exits.* All entryways into the nonquarantine area of the facility must be equipped with a secure and lockable door. While horses are in quarantine, all access to the quarantine area for horses must be from within the building, and each such entryway to the quarantine area must be equipped with a series of solid self-closing double doors. Emergency exits to the outside are permitted in the quarantine area. Such emergency exits must be constructed so as to permit their being opened from the inside of the facility only.

(C) *Windows and other openings.* The facility must be constructed so that any windows or other openings in the quarantine area are double-screened with screening of sufficient gauge and mesh to prevent the entry or exit of insects and other vectors of diseases of horses and to provide ventilation sufficient to ensure the comfort and safety of all horses in the facility. The interior and exterior screens must be separated by at least 3 inches (7.62 cm). All screening of windows or other openings must be easily removable for cleaning, but must otherwise remain locked and secure at all times in a manner satisfactory to APHIS representatives in order to ensure the biological security of the facility.

(D) *Lighting.* The entire facility, including its stalls and hallways, must have adequate lighting.

(E) *Loading docks.* The facility must have separate docks for animal receiving and releasing and for general receiving and pickup, unless a single dock used for both purposes is cleaned and disinfected after each use in accordance with paragraph (c)(4)(iv)(F) of this section.

(F) *Surfaces.* The facility must be constructed so that the floor surfaces with which horses have contact are nonslip and wear-resistant. All floor surfaces with which the horses, their excrement, or discharges have contact must provide for adequate drainage. All floor and wall surfaces with which the horses, their excrement, or discharges have contact must be impervious to moisture and be able to withstand frequent cleaning and disinfection without deterioration. Ceilings and wall surfaces with which the horses, their excrement, or discharges do not have contact must be able to withstand cleaning and disinfection between shipments of horses. All floor and wall surfaces must be free of sharp edges that could cause injury to horses.

(G) *Horse stalls.* The stalls in which horses are kept must be large enough to allow each animal to make normal postural and social adjustments with adequate freedom of movement.

(H) *Aisleways.* The aisleways through which horses are moved to and from stalls must be wide enough to provide for safe movement of horses, including allowing horses to turn around in the aisleway, prevent horses in facing stalls from coming into contact with horses in the aisleway, and to adequately ventilate the stalls.

(I) *Means of isolation.* Physical barriers must separate different lots of horses in the facility so that horses in one lot cannot have physical contact with horses in another lot or with their excrement or discharges. Stalls must be available that are capable of isolating any horses exhibiting signs of illness.

(J) *Showers.* A shower must be located at each entrance to the quarantine area. If the facility has a necropsy area, a shower must be located at the entrance to the necropsy area. A clothes-storage and clothes-changing area must be provided with each shower area. There must also be one or more receptacles near each shower so that clothing that has been worn into the quarantine area can be deposited in a receptacle prior to entering the shower.

(K) *APHIS space.* The facility must have adequate space for APHIS representatives to conduct examinations and testing of the horses in quarantine, prepare and package samples for mailing, and store the necessary equipment and supplies for duplicate samples. The space provided to conduct examinations and testing must include a refrigerator-freezer in which to store samples. The examination space must include equipment to provide for the safe inspection of horses. The facility must also include a secure, lockable office for APHIS use with enough room for a desk, chair, and filing cabinet.

(L) *Necropsy area.* The facility must either include an area for conducting necropsies onsite or must have designated an alternate facility at which a suitable necropsy area is available. If the facility has a necropsy area, it must be of sufficient size to perform necropsies on horses and be equipped with adequate lighting, hot and cold running water, a drain, a cabinet for storing instruments, a refrigerator-freezer for storing specimens, and an autoclave to sterilize veterinary equipment. If the facility does not have such an area, it must specify an alternate facility at which a suitable necropsy area is available, a route from the quarantine facility to the alternate facility's necropsy area, and the safeguards that will be in place to ensure that communicable diseases of horses are not spread during transit.

This alternate facility and transport methodology must be approved by the Administrator under the procedures for requesting variances outlined in paragraph (c)(6) of this section.

(M) *Storage.* The facility must have sufficient storage space for equipment and supplies used in quarantine operations. Storage space must include separate, secure storage for pesticides and for medical and other biological supplies, as well as a separate vermin-proof storage area for feed and bedding, if feed and bedding are stored at the facility. If the facility has multiple lot-holding areas, then separate storage space for any reusable supplies and equipment that are not disinfected after each use in accordance with part 71 of this chapter must be provided for each lot-holding area.

(N) *Additional space needs.* The facility must have an area for washing and drying clothes, linens, and towels and an area for cleaning and disinfecting equipment used in the facility. The facility must also include a work area for the repair of equipment.

(O) *Restrooms.* The facility must have permanent restrooms in both the quarantine and nonquarantine areas of the facility.

(P) *Ventilation and climate control.* The facility must be constructed with an air handling system capable of controlling and maintaining the ambient temperature, air quality, humidity, and odor at levels that are not injurious or harmful to the health of horses in quarantine. Air supplied to the quarantine area must not be recirculated or reused for other ventilation needs. Air handling systems for lot-holding areas must be separate from air handling systems for other operational and administrative areas of the facility. In addition, if the facility is equipped to handle more than one lot of horses at a time, the air handling system must be adequate to ensure that there is no cross-contamination of air between the separate lot-holding areas.

(Q) *Fire protection.* The facility, including the lot holding areas, must have a fire alarm voice communication system.

(R) *Communication system.* The facility must have a communication system between the nonquarantine and quarantine areas of the facility.

(iii) *Sanitation.* To ensure that proper animal health and biological security measures are observed, the facility must have the following:

(A) Equipment and supplies necessary to maintain the facility in clean and sanitary condition, including pest control equipment and supplies and cleaning and disinfecting equipment with adequate capacity to disinfect the facility and equipment.

(B) Any reusable equipment and supplies that are not disinfected after each use in accordance with part 71 of this chapter maintained separately for each lot of horses.

(C) Equipment and supplies used in the quarantine area maintained separately from equipment and supplies used in the nonquarantine area.

(D) A supply of potable water adequate to meet all watering and cleaning needs, with water faucets for hoses located throughout the facility. An emergency supply of water for horses in quarantine must also be maintained.

(E) A stock of disinfectant authorized in part 71 of this chapter or otherwise approved by the Administrator that is sufficient to disinfect the entire facility.

(F) The capability to dispose of wastes, including manure, urine, and used bedding, by means of burial, incineration, or public sewer. Other waste material must be handled in such a manner that minimizes spoilage and the attraction of pests and must be disposed of by incineration, public sewer, or other preapproved manner that prevents the spread of disease. Disposal of wastes must be carried out under the oversight of APHIS representatives.

(G) The capability to dispose of horse carcasses in a manner approved by the Administrator and under conditions that minimize the risk of disease spread from carcasses.

(H) For incineration to be carried out at the facility, the facility must have incineration equipment that is detached from other facility structures and is capable of burning animal waste and refuse. The incineration site must also include an area sufficient for solid waste holding. Incineration may also take place at a local site away from the facility premises. All incineration activities, whether onsite or offsite, must be carried out under the direct oversight of APHIS representatives.

(I) The capability to control surface drainage and effluent into, within, and from the facility in a manner that prevents the spread of disease into, within, or from the facility. If the facility is approved to handle more than one lot of horses at the same time, the drainage system must be adequate to ensure that there is no cross-contamination between lot-holding areas.

(iv) *Security.* Facilities must provide the following security measures:

(A) The facility and premises must be kept locked and secure at all times while horses are in quarantine.

(B) The facility and premises must have signs indicating that the facility is a quarantine area and no visitors are allowed.

(C) The facility and premises must be guarded at all times by one or more representatives of a bonded security company or, alternatively, the facility must have an electronic security system that indicates the entry of unauthorized persons into the facility. Electronic security systems must be coordinated through or with the local police so that monitoring of the quarantine facility is maintained whenever APHIS representatives are not at the facility. The electronic security system must be of the ''silent type'' and must be triggered to ring at the monitoring site and not at the facility. The electronic security system must be approved by Underwriter's Laboratories. The operator must provide written instructions to the monitoring agency stating that the police and a representative of APHIS designated by APHIS must be notified by the monitoring agency if the alarm is triggered. The operator must also submit a copy of those instructions to the Administrator. The operator must notify the designated APHIS representative whenever a breach of security occurs or is suspected of having occurred. In the event that disease is diagnosed in quarantined horses, the Administrator may require the operator to have the facility guarded by a bonded security company in a manner that the Administrator deems necessary to ensure the biological security of the facility.

(D) The operator must furnish a telephone number or numbers to APHIS at which the operator or his or her agent can be reached at all times.

(E) APHIS is authorized to place APHIS seals on any or all entrances and exits of the facility when determined necessary by APHIS and to take all necessary steps to ensure that such seals are broken only in the presence of an APHIS representative. If someone other than an APHIS representative breaks such seals, APHIS will consider the act a breach in security and APHIS representatives will make an immediate accounting of all horses in the facility. If a breach in security occurs, APHIS may extend the quarantine period as long as necessary to determine that the horses are free of communicable diseases.

(4) *Operating procedures.* The following procedures must be observed at the facility at all times:

(i) *APHIS oversight.*

(A) The quarantine of horses at a privately owned quarantine facility is

subject to the oversight of APHIS representatives authorized to perform the services required by this section and by the compliance agreement.

(B) If, for any reason, the operator fails to properly care for, feed, or handle the quarantined horses as required in this paragraph (c), or fails to maintain and operate the facility as provided in this paragraph (c), APHIS representatives will furnish such services or make arrangements for the sale or disposal of quarantined horses at the quarantine facility owner's expense.

(ii) *Personnel.*

(A) The operator must provide adequate personnel to maintain the facility and care for the horses in quarantine, including attendants to care for and feed horses, and other personnel as needed to maintain, operate, and administer the facility.

(B) The operator must provide APHIS with an up-to-date list of all personnel who have access to the facility. The list must include the names, current residential addresses, and employee identification numbers of each person. When the operator wishes to grant access to the facility to persons who have not previously had access to it, the operator must update the list prior to such persons having access to the quarantine facility.

(C) The operator must provide APHIS with signed statements from each employee and any other personnel hired by the operator and working at the facility in which the person agrees to comply with paragraph (c) of this section and applicable provisions of this part, all terms of the compliance agreement, and any related instructions from APHIS representatives pertaining to quarantine operations, including contact with animals both inside and outside the facility.

(iii) *Authorized access.* Access to the facility premises as well as inside the quarantine area will be granted only to APHIS representatives, authorized employees, and other personnel of the operator assigned to work at the facility. All other persons are prohibited from the premises unless specifically granted access by an APHIS representative. Any visitors granted access must be accompanied at all times by an APHIS representative while on the premises or in the quarantine area of the facility.

(iv) *Sanitary requirements.*

(A) All persons granted access to the quarantine area must:

(*1*) Shower when entering and leaving the quarantine area;

(*2*) Shower when leaving the necropsy area if a necropsy is in the process of being performed or has just been completed, or if all or portions of the examined animal remain exposed;

(*3*) Wear clean protective work clothing and footwear upon entering the quarantine area;

(*4*) Wear disposable gloves when handling sick horses and then wash hands after removing gloves; and

(*5*) Change protective clothing, footwear, and gloves when they become soiled or contaminated.

(B) The operator is responsible for providing a sufficient supply of clothing and footwear to ensure that all persons provided access to the quarantine area at the facility have clean, protective clothing and footwear when they enter the quarantine area.

(C) The operator is responsible for the handling, washing, and disposal of soiled and contaminated clothing worn within the quarantine facility in a manner approved by APHIS as adequate to preclude transmission of any animal disease agent from the facility. At the end of each workday, work clothing worn into the quarantine area must be collected and kept in a bag until the clothing is washed. Used footwear must either be left in the clothes changing area or cleaned with hot water (148 °F minimum) and detergent and disinfected as directed by an APHIS representative.

(D) All equipment (including tractors) must be cleaned and disinfected prior to being used in the quarantine area of the facility with a disinfectant authorized in part 71 of this chapter or otherwise approved by the Administrator. The equipment must remain dedicated to the facility for the entire quarantine period. Any equipment used with quarantined horses (e.g., halters, floats, feed and water buckets) must remain dedicated to that particular lot of quarantined horses for the duration of the quarantine period or be cleaned and disinfected before coming in contact with horses from another lot. Prior to its removal from the quarantine premises, any equipment must be cleaned and disinfected to the satisfaction of an APHIS representative.

(E) Any vehicle, before entering or leaving the quarantine area of the facility, must be cleaned and disinfected under the oversight of an APHIS representative within a time period authorized by the APHIS representative and with a disinfectant authorized in part 71 of this chapter or otherwise approved by the Administrator.

(F) If the facility has a single loading dock, the loading dock must be cleaned and disinfected after each use under the oversight of an APHIS representative within a time period authorized by the APHIS representative and with a disinfectant authorized in part 71 of this chapter or otherwise approved by the Administrator.

(G) That area of the facility in which a lot of horses has been held or has had access to must be thoroughly cleaned and disinfected, with a disinfectant authorized in part 71 of this chapter or otherwise approved by the Administrator, under the oversight of an APHIS representative upon release of the horses before a new lot of horses is placed in that area of the facility.

(v) *Handling of the horses in quarantine.*

(A) All horses must be handled in accordance with paragraph (a) of this section.

(B) Each lot of horses to be quarantined must be placed in the facility on an ''all-in, all-out'' basis. No horse may be taken out of the lot while it is in quarantine, except for diagnostic purposes or as provided in paragraph (a)(4) of this section, and no horse may be added to the lot while the lot is in quarantine.

(C) The facility must provide sufficient feed and bedding for the horses in quarantine, and it must be free of vermin and not spoiled. Feed and bedding must originate from an area that is not listed in part 72 of this chapter as an area quarantined for splenetic or tick fever.

(D) Breeding of horses or collection of germplasm from horses is prohibited during the quarantine period.

(E) Horses in quarantine will be subjected to such tests and procedures as directed by an APHIS representative to determine whether they are free from communicable diseases of horses.

(F) Any death or suspected illness of horses in quarantine must be reported immediately to APHIS. The affected horses must be disposed of as the Administrator may direct or, depending on the nature of the disease, must be cared for as directed by APHIS to prevent the spread of disease.

(G) Quarantined horses requiring specialized medical attention or additional postmortem testing may be transported off the quarantine site, if authorized by APHIS. A second quarantine site must be established to house the horses at the facility of destination (*e.g.*, veterinary teaching hospital). In such cases, APHIS may extend the quarantine period for that horse and for its lot until the results of any outstanding tests or postmortem results are received.

(H) Should a horse be determined to be infected with or exposed to a communicable disease of horses, arrangements for the final disposition of the infected or exposed horse must be accomplished within 10 days of the date

that the importer is notified by the overseeing APHIS representative that the horse has been refused entry into the United States. Subsequent disposition of the horse must occur under the direct oversight of APHIS representatives. The operator must have a preapproved contingency plan for the disposal of all horses housed in the facility prior to issuance of the import permit.

(I) Vaccination of horses in quarantine is prohibited.

(vi) *Records.*

(A) The facility operator must maintain a current daily record to record the entry and exit of all persons entering and leaving the quarantine facility.

(B) The operator must maintain the daily record, along with any records kept by APHIS and deposited with the operator, for at least 2 years following the date of release of the horses from quarantine and must make such records available to APHIS representatives upon request.

(5) *Environmental quality.* If APHIS determines that a privately operated quarantine facility does not meet applicable local, State, or Federal environmental regulations, APHIS may deny or suspend approval of the facility until appropriate remedial measures have been applied.

(6) *Variances.* The Administrator may grant variances to existing requirements relating to location, construction, and other design features of the physical facility, as well as to sanitation, security, operating procedures, recordkeeping, and other provisions of paragraph (c) of this section, but only if the Administrator determines that the variance causes no detrimental impact to the overall biological security of the quarantine operations. The operator must submit a request for a variance from the requirements for the construction of the facility in paragraph (c)(3) of this section to the Administrator in writing prior to the construction of the facility. The operator must submit a request for a variance from the operational requirements in paragraph (c)(4) of this section to the Administrator in writing at least 30 days in advance of the arrival of horses to the facility. Any variance must also be expressly provided for in the compliance agreement.

8. In § 93.309, the section heading would be revised to read as follows:

§ 93.309 Horse quarantine facilities; payment information.

* * * * *

9. Section 93.310 would be revised to read as follows:

§ 93.310 Quarantine stations, visiting restricted; sales prohibited.

Visitors are not permitted in the quarantine enclosure during any time that horses are in quarantine unless an APHIS representative specifically grants access under such conditions and restrictions as may be imposed by APHIS. An importer (or his or her agent or accredited veterinarian) may be admitted to the lot-holding area(s) containing his or her quarantined horses at such intervals as may be deemed necessary, and under such conditions and restrictions as may be imposed, by an APHIS representative. On the last day of the quarantine period, owners, officers or registry societies, and others having official business or whose services may be necessary in the removal of the horses may be admitted upon written permission from an APHIS representative. No exhibition or sale shall be allowed within the quarantine grounds.

Done in Washington, DC, this 1st day of December 2006.

Bruce Knight,

Under Secretary for Marketing and Regulatory Programs.

[FR Doc. E6–21032 Filed 12–12–06; 8:45 am]

BILLING CODE 3410–34–P

NUCLEAR REGULATORY COMMISSION

10 CFR Part 20

Public Meeting on Consideration of Rulemaking To Reduce the Likelihood of Funding Shortfalls for Decommissioning Under the License Termination Rule

AGENCY: Nuclear Regulatory Commission.

ACTION: Notice of meeting.

SUMMARY: The Nuclear Regulatory Commission (NRC) is working on a proposed rule to reduce the likelihood that a licensee will have insufficient funds to decommission its facility in accordance with 10 CFR part 20, Subpart E, Radiological Criteria for License Termination. In the past, these funding shortfalls resulted in ''legacy sites,'' which are sites that are in decommissioning but whose operators do not have enough funds to complete the work and terminate the license in accordance with NRC regulations. All of the legacy sites have been materials facilities, primarily those that processed uranium and thorium, with undetected subsurface contamination from operations arising as a significant problem during decommissioning. A risk-informed approach addressing subsurface contamination at operating facilities would affect materials licensees and operators of nuclear power reactors. The purpose of the meeting is to give stakeholders an opportunity to discuss their views and interact with other interested parties on the regulatory issues summarized in the Supplementary Information section of this document.

To aid in the rulemaking process, NRC is holding a public meeting with a ''roundtable'' format (defined further in the body of this notice) to solicit input. The meeting is open to the public. The NRC is asking those planning to attend the meeting to pre-register by contacting Jayne McCausland as noted under the For Further Information section of this document. Individuals unable to attend the meeting will be able to listen by teleconference.

DATES: The meeting will be held on January 10, 2007, from 9 a.m. to 4 p.m. Registration is from 8:30 a.m. to 9 a.m.; however, all persons planning to attend the meeting are encouraged to pre-register in order to facilitate check-in on the day of the meeting.

ADDRESSES: Residence Inn Bethesda Downtown, 7335 Wisconsin Avenue, Bethesda, Maryland, 20814. Telephone (301) 718–0200.

FOR FURTHER INFORMATION CONTACT: Kevin O'Sullivan, telephone (301) 415–8112, e-mail *kro2@nrc.gov*, of the Office of Federal and State Materials and Environmental Management Programs, U.S. Nuclear Regulatory Commission, Washington, DC 20555–0001. Questions on the meeting format, including participation in the roundtable, should be directed to the meeting facilitator, Lance Rakovan. Mr. Rakovan can be reached at (301) 415–2589 or *ljr2@nrc.gov*. To pre-register to attend the meeting in person or to participate via teleconference, or if a participant has special needs, please contact Jayne McCausland, telephone (301) 415–6219, fax (301) 415–5369, or e-mail *jmm2@nrc.gov*.

SUPPLEMENTARY INFORMATION: Current NRC regulations in 10 CFR part 20, Subpart F, Surveys and Monitoring, require licensees to conduct surveys, as reasonable under the circumstances, to evaluate (1) the magnitude and extent of radiation levels; (2) concentrations or quantities of radioactive material; and (3) the potential radiological hazards. NRC regulations in 10 CFR 20, Subpart L, Records, contain related record-keeping requirements. There have been past occurrences among materials licensees, and recent occurrences at

nuclear power reactors, of inadvertent and undetected release of radioactive material into the underlying soils and groundwater. Such undetected subsurface contamination from operations may significantly expand the scope of decommissioning when the facility is shut down, to the extent that the licensee has insufficient funds to terminate the license in accordance with NRC regulations.

Amendments to NRC regulations are under consideration that will affect both facility operations and financial assurance for decommissioning requirements. One proposed change would require each NRC licensee to conduct operations, to the extent practicable, so as to minimize the presence of contamination in the subsurface environment. A second would require certain licensees, based on their capability for causing long-lasting subsurface contamination, to check for the presence of such contamination. NRC experience with legacy sites demonstrates that soil or groundwater contamination, if not addressed during the operating life of the facility, can increase decommissioning costs to levels much higher than initially funded and may contribute to off-site radionuclide migration, causing additional expense and delay in returning the site to other productive uses.

Another regulatory amendment under consideration is to eliminate the escrow account as an approved financial assurance mechanism due to its ineffectiveness in bankruptcy actions. Two other financial assurance mechanisms that pose similar financial risk during bankruptcy are the unsecured Parent Company Guarantee and unsecured Self-Guarantee. Reliance on these financial assurance mechanisms may increase the likelihood of future legacy sites.

The January 10, 2007, public meeting is being held to discuss these and related issues using a ''roundtable'' format. Participants at the roundtable will be the invited stakeholders representing the broad spectrum of interests who may be affected by this rulemaking. The roundtable format is being used for this meeting to promote a dialogue among the representatives at the table on the issues of concern. Opportunities will be provided for comments and questions from the audience. The meeting notice and a meeting agenda will be posted on the NRC Web site at: *http://www.nrc.gov/public-involve/public-meetings/index.cfm.*

Dated at Rockville, Maryland, this 6th day of December 2006.

For the Nuclear Regulatory Commission.

Dennis Rathbun,

Director, Division of Intergovernmental Liaison and Rulemaking, Office of Federal and State Materials and Environmental Management Programs.

[FR Doc. E6–21154 Filed 12–12–06; 8:45 am]

BILLING CODE 7590–01–P

NUCLEAR REGULATORY COMMISSION

10 CFR Part 54

[Docket Nos. PRM–54–02 and PRM–54–03]

Andrew J. Spano and Joseph C. Scarpelli; Denials of Petition for Rulemaking

AGENCY: Nuclear Regulatory Commission.

ACTION: Petitions for rulemaking; denial.

SUMMARY: The Nuclear Regulatory Commission (NRC) is denying two nearly identical petitions for rulemaking submitted by Andrew J. Spano, County Executive, Westchester County, New York (PRM–54–02), and Mayor Joseph Scarpelli of Brick Township, New Jersey (PRM–54–03). The petitioners requested that the NRC amend its regulations to provide that the agency renew a license only if the plant operator demonstrates that the plant meets all criteria and requirements that would apply if it were proposing the plant de novo for initial construction. The petitioners assert that amendments are necessary because they believe the process and criteria established in the Commission's license renewal regulations are seriously flawed and should consider critical plant-specific factors as demographics, siting, emergency evacuation, and site security. The NRC is denying the petitions because the petitioners raise issues that the Commission has already considered at length in developing the license renewal rule. These issues are managed by the on-going regulatory process or under other regulations; or are issues beyond the Commission's regulatory authority. The petitioners did not present new information that would contradict positions taken by the Commission when the license renewal rule was established or demonstrate that sufficient reason exists to modify the current regulations.

ADDRESSES: Publicly available documents related to these petitions, including the petitions, public comments received, and the NRC's letters of denial to the petitioners, may be viewed electronically on public computers in the NRC's Public Document Room (PDR), O–1 F21, One White Flint North, 11555 Rockville Pike, Rockville, Maryland. The PDR reproduction contractor will copy documents for a fee. Selected documents, including comments, may be viewed and downloaded electronically via the NRC rulemaking Web site at *http://ruleforum.llnl.gov*.

Publicly available documents created or received at the NRC after November 1, 1999, are also available electronically at the NRC's Electronic Reading Room at *http://www.nrc.gov/reading-rm/adams.html*. From this site, the public can gain entry into the NRC's Agencywide Document Access and Management System (ADAMS), which provides text and image files of NRC's public documents. If you do not have access to ADAMS or if there are problems in accessing the documents located in ADAMS, contact the PDR reference staff at (800) 387–4209, (301) 415–4737 or by e-mail to *pdr@nrc.gov*.

FOR FURTHER INFORMATION CONTACT: Lee Banic, Office of Nuclear Reactor Regulation, U.S. Nuclear Regulatory Commission, Washington, DC 20555–0001, telephone (301) 415–2771, e-mail *mjb@nrc.gov*.

SUPPLEMENTARY INFORMATION:

I. Background

The NRC received two separate, but nearly identical, petitions for rulemaking in 2005 requesting that part 54, Requirements for renewal of operating licenses for nuclear power plants be amended. Mr. Andrew J. Spano, the County Executive of Westchester County, New York, filed the first petition on May 10, 2005, which was assigned Docket No. PRM–54–02. The NRC published a notice of receipt of the petition and request for public comment in the **Federal Register** on June 15, 2005 (70 FR 34700). Mayor Joseph C. Scarpelli of Brick Township, New Jersey, filed the second petition on July 20, 2005, which was assigned Docket Number PRM–54–03.[1] The NRC published a notice of receipt of the petition and request for public comment in the **Federal Register** on September 14, 2005 (70 FR 54310). Because of the similarities to PRM–54–02, Mayor

[1] Attorney Michelle R. Donato actually filed PRM–54–03 on behalf of Mayor Scarpelli, the New Jersey Environmental Federation (NJEF), and the New Jersey Sierra Club (NJSC). Although Ms. Donato's letter indicates that she is presenting three ''formal'' petitions to the NRC, the submissions from NJEF and NJSC state that they are submitted ''in support of'' or joining Mayor Scarpelli's petition. They do not appear to request petitioner status. Thus, any reference in this document to the PRM–54–03 petitioner is limited to Mayor Scarpelli.

Scarpelli also requested that his petition be joined with Mr. Spano's. The NRC agrees that the issues raised in these petitions and some of the public comments are nearly identical, and thus it is appropriate to evaluate the petitions together.

PRM–54–02 (Mr. Andrew J. Spano)

Westchester County is a political subdivision and municipality of the State of New York, and is located immediately north of New York City. It is 450 square miles in size. It has a southern border with New York City (Bronx County) and a northern border with Putnam County. It is flanked on the west side by the Hudson River and on the east side by Long Island Sound and Fairfield County, Connecticut. The total population of Westchester County, as measured in the 2000 Census, is 923,459. The 2000 population is over 100,000 more than it was as measured in the 1960 Census.

Westchester County is the host county for the Indian Point Energy Facility (Indian Point or IP), located in the Village of Buchanan, Town of Cortlandt. There are two nuclear power units at Indian Point: IP2 and IP3. These are currently operated by single purpose entities controlled by the Entergy Corporation (Entergy). IP2 & IP3's operating licenses are scheduled to expire in 2013 and 2015, respectively, and Mr. Spano believes that in accordance with industry trends, Entergy could apply for license extensions for up to an additional twenty years, provided certain operating, environmental, and safety conditions are met.

Mr. Spano stated that because of the presence of Indian Point, Westchester County has long had an interest and concern with the environmental, emergency, and public safety issues with respect to Indian Point. Mr. Spano further stated that after living with nuclear power plants for the past three decades, several events have changed the local community's perspective on the continued presence of the Indian Point facility: Three Mile Island-2, the Browns Ferry fire, utility bankruptcies, the Chernobyl accident, delays at Yucca Mountain, Davis-Besse reactor head problems, and the events of September 11, 2001. He believes that as a result of these events, orders for the construction of reactor facilities have ceased and the public has become justifiably concerned about nuclear power plant safety. Mr. Spano stated that these concerns are particularly sensitive at Indian Point, because of its proximity to major population centers, periodic leaks of radioactive material, difficult (if not impossible) evacuation issues, and its proximity to the events which occurred at the World Trade Center.

PRM–54–03 (Mayor Joseph C. Scarpelli)

Brick Township, New Jersey is situated in the northern part of Ocean County, directly on the border of Monmouth County, and is located approximately 18 miles north of Oyster Creek Nuclear Generating Station (Oyster Creek or OCNGS). Mayor Scarpelli stated that Ocean County is located on the Jersey Shore, approximately 50 miles south of New York City and 50 miles east of Philadelphia, Pennsylvania. Ocean County encompasses nearly 640 square miles. Mayor Scarpelli stated that Ocean County's location on the Atlantic Ocean makes it one of the premier tourist destinations in the United States.

Oyster Creek, which is located in Lacey Township, became operational in 1969. In 1970, one year after Oyster Creek began producing electricity, Ocean County, New Jersey had 208,470 residents. Mayor Scarpelli also stated that according to the 2000 Census, Ocean County today has 510,916 residents, a growth of over 245 percent. Mayor Scarpelli also stated that Brick Township has experienced great growth over the past four decades, and that Brick Township is presently home to over 77,000 residents as compared to the 35,057 residents it claimed in 1970.

Mayor Scarpelli stated that there have been numerous incidents that have occurred since Oyster Creek began operating that have raised concerns about the safety and security of nuclear power, particularly in densely populated areas, including the near catastrophe at Three Mile Island, the realized catastrophe at Chernobyl, the controversy about Yucca Mountain, and the terrorist attacks of September 11, 2001. Mayor Scarpelli is particularly concerned that the evacuation of the communities surrounding Oyster Creek requires extensive review and consideration because of the growing concern of traffic congestion in Ocean County due to an aging infrastructure that has not kept up with the population growth.

The Petitions

Both petitions present nearly identical issues and requests for rulemaking. Both petitioners believe that the license renewal process and criteria currently established in part 54 are ''seriously flawed.'' They argue that the process for license renewal appears to be based on the theory that if the plant was originally safe to be licensed at the site, it would also be satisfactory to renew the license, barring any significant issues involving passive structures, systems, and components. The petitioners further suggest that many key factors affecting nuclear plant licensing evolve over time, in that the population grows; local, State, and Federal regulations evolve; public awareness increases; technology improves; and plant economic values change. As a result, roads and infrastructure required for a successful evacuation may not improve along with population density, inspection methods may not be adopted or may be used inappropriately, and regulations may alter the plant design after commercial operation. According to the petitioners, the license renewal process under 10 CFR part 54 inappropriately excludes these factors. Mr. Spano also suggested that, before the concept of license renewal for nuclear power plants was established, it was generally assumed that plants would exist as operating facilities for the rest of their design life and then would enter a decommissioning phase. He stated that this assumption is supported by the fact that the collection of decommissioning funds from ratepayers initiated in the 1970s was based on a 40-year life of the facility.

Both petitions set forth a list of ''key renewal issues,'' that are stated as questions the petitioners believe are necessary to confront during the license renewal process. Mr Spano lists five such ''key renewal issues:''

(1) Could a new plant, designed and built to current standards, be licensed on the same site today? For example, given the population growth in Westchester County, it is uncertain if Indian Point would be licensed today. The population in the areas near Indian Point has outpaced the capacity of the road infrastructure to support it, making effective evacuation in an emergency unlikely.

(2) Have the local societal and infrastructure factors that influenced the original plant licensing changed in a manner that would make the plant less apt to be licensed today? For example, three of four counties surrounding Indian Point have not submitted certified letters in support of the emergency evacuation plan. That would not be a consideration under the current licensing process. However, the inability of local governments to support the safety of the evacuation plan should, at the very least, give serious pause before the licenses of the plants are renewed.

(3) Can the plant be modified to assure public health and safety in a post-9/11 era? For example, Indian Point cannot be made sufficiently safe according to James Lee Witt, former head of FEMA.

(4) Have local/State regulations changed that would affect the plant's continued operation? For example, Indian Point must convert from once-through cooling to a closed-cycle design using cooling towers.

(5) The original design basis of older nuclear power plants did not include extended onsite storage of spent nuclear fuel (SNF). At Indian Point for example, the current SNF storage plan includes one or more Independent Spent Fuel Storage Installations onsite, which increases the overall risk to the local community.

Mayor Scarpelli identifies six similarly phrased ''key renewal issues:''

(1) Could a new plant, designed and built to current standards, be licensed on the same site today? With the growth of Ocean County, which continues today, it is not certain that a nuclear plant would be permitted there today.

(2) The design of Oyster Creek's reactor has been prohibited for nearly four decades. Does that reactor conform to today's standards? Would Oyster Creek receive a license today with that reactor?

(3) In light of the terrorist attacks of September 11, 2001, would Oyster Creek's storage system, which is located close to Route 9, be acceptable today?

(4) Is the evacuation plan realistic in today's Ocean County? Would the tremendous growth of Ocean County over the past four decades, and the failure of Ocean County's infrastructure to keep pace with this growth, inhibit Oyster Creek's likelihood of receiving an operating license?

(5) Would a license be permitted in light of the public opposition to the plant? To date, 21 municipalities in Ocean County, as well as Congressmen Smith, Saxton and Pallone, New Jersey Department of Environmental Protection Commissioner Bradley, and the Ocean County Board of Chosen Freeholders, have expressed either their concern for a thorough review and/or their opposition to the re-licensing.

(6) In recent weeks, two studies released by the National Academy of Sciences have raised serious concerns about nuclear plant security and the health effects of low-level radiation upon people who reside near nuclear plants. Should these two scientific studies and other relevant scientific data regarding human health and anti-terrorism be taken into account when considering Oyster Creek's license renewal application?

II. The Proposed Amendments

The petitioners requested that the NRC amend its regulations to provide that it will issue a renewed license only if the plant operator demonstrates that the plant meets all criteria and requirements that would apply if it were proposing the plant de novo for an initial construction permit and operating license. The petitioners therefore requested that the NRC amend § 54.29 to provide that the Commission will issue a renewed license only if it finds that, upon a de novo review, the plant would be entitled to an initial operating license in accordance with all criteria applicable to initial operating licenses, as set out in the Commission's regulations, including 10 CFR parts 2, 19, 20, 21, 26, 30, 40, 50, 51, 54, 55, 73, 100, and the appendices to these regulations. The petitioners also requested that the NRC make corresponding amendments to §§ 54.4, 54.19, 54.21, and 54.23, and rescind § 54.30. The petitioners stated that the criteria to be examined as part of a renewal application should include factors such as demographics, siting, emergency evacuation, and site security. The petitioners believe that in undertaking this analysis the NRC should focus on the critical plant-specific factors and conditions that have the greatest potential to affect public safety.

III. Public Comments Received on the Petitions

The NRC received 21 comment letters on PRM–54–02. Fifteen letters support the granting of the petition and six support denying the petition. On PRM–54–03, the NRC received four letters. One letter supports granting the petition and three letters support denial.

Letters in Support of Granting the Petitions

Eleven letters of support came from individuals and five came from public interest groups or individuals affiliated with public interest groups. The public interest groups are Riverkeeper, Nuclear Free Vermont, Critical Mass Energy and Environment Program (CMEP), which is part of Public Citizen, Public Citizen, and the Nuclear Information and Resource Service. Most of the letters are short statements of support and echo the petitioners concerns about emergency planning, evacuation, population density, and infrastructure. Other letters, mainly from organizations, comment more extensively and raise additional issues for consideration in renewing licenses. These issues include requiring an intergrated plant assessment of both moving and non-moving parts; basing the regulations on the best scientific and technical knowledge and data available; the use of seismic hazard analyses; public participation; designs of older plants; site-specific reviews, and waste management.

Several commenters stated that they are concerned that the current relicensing regulations are not in the best interest of the public and its health and safety. They state that nuclear plants should meet the highest standards. They define these standards as those that are based on the most current experience and knowledge.

One commenter focused in detail on the changes he thinks should be made to the NRC's license renewal regulations: requiring a moving parts assessment; addressing storage of spent nuclear fuel, the changes in population density and traffic patterns in the supplemental environmental impact study, and evaluating the feasibility of the current emergency evacuation for communities surrounding operating plants.

Another commenter stated that license extension is not a right. The commenter believes that site-specific analysis is necessary and improved knowledge must be applied. The NRC should not ''lower the bar for currently operating plants, and they should be required to meet or exceed the very same standards a new operator would.''

Letters in Support of Denying the Petitions

Of the nine letters supporting denial, seven letters came from industry organizations and two from individuals. The industry organizations are Entergy, Exelon, the Nuclear Energy Institute (NEI) (who sent 2 letters, 1 for each petition), Southern California Edison, Tennessee Valley Authority, and Strategic Teaming and Resource Sharing, a group of six utilities. Those letters mainly argue that the proposed amendments are misguided and contrary to sound regulatory and public policy. Specifically, these commenters argue that the petitioners misconstrue the 1991 license renewal rule; the petitioners propose regulating factors that are beyond NRC's jurisdiction and not appropriate for rulemaking; the proposed rulemaking would duplicate the regulation of matters that are subject of ongoing regulatory oversight; and that the petitions lack bases upon which the Commission should conclude that its earlier determinations were incorrect or inappropriate.

NEI, commenting on behalf of the nuclear industry, states that the petitions should be denied because the regulatory framework of the existing NRC license renewal process is appropriately focused and adequately protects public health and safety. NEI also states that the petitions fail to provide a valid basis for expanding license renewal reviews to duplicate the Commission's initial plant licensing review on certain topics.

One letter from an individual opposes Mayor Scarpelli's proposal and specific issues. He states that his concerns with the Mayor's proposal are that they would result in the inevitable closing of nuclear power plants in New Jersey and nationwide, and in the resulting rise in energy costs to consumers. The commenter states that the Mayor has ample opportunity to voice his concerns through the current renewal process.

The commenter also states that because Oyster Creek appears to be the mayor's primary focus, amending NRC regulations would be ''a horrendously overinclusive remedy to a local problem.'' Finally, the commenter cites both local and statewide public support for the renewal of Oyster Creek's license.

IV. Discussion

The NRC has reviewed the petitions and the public comments and appreciates the concerns raised. However, the NRC is denying both petitions under § 2.803. The reasons for the denials are described in more detail in the discussion that follows. Briefly, the petitions raise issues that the Commission already considered at length in developing the license renewal rule (December 13, 1991; 56 FR 64943). These issues are managed by the on-going regulatory process or under other regulations; or are issues beyond the Commission's regulatory authority. The petitioners did not present any new information that would contradict positions taken by the Commission when the license renewal rule was established or demonstrate that sufficient reason exists to modify the current regulations.

Summary of the License Renewal Process

Under the Atomic Energy Act of 1954, as amended (AEA), the NRC issues licenses for commercial power reactors to operate for up to 40 years and allows these licenses to be renewed for another 20 years upon application by the licensee. The 40-year license term was selected on the basis of economic and antitrust considerations, not technical limitations (56 FR 64960–64962; December 13, 1991).

The Commission has explained its regulatory philosophy in license renewal at length in the final rule issued December 13, 1991 (56 FR 64943), as well as revisions to the final rule issued May 8, 1995 (60 FR 22461). That philosophy is that the issues material to the renewal of a nuclear power plant operating license are to be confined to those issues that the Commission determines are uniquely relevant to protecting the public health and safety and preserving common defense and security during the period of extended operation. This basic philosophy led the Commission to the formulation of two principles of license renewal as described in the 1995 document:

1. The current regulatory process is adequate to ensure that the licensing bases of all currently operating plants provide and maintain an acceptable level of safety, except for possibly the detrimental effects of aging on certain structures, systems, and components and possibly a few other issues related to safety only during extended operation. Issues relevant to current plant operations are addressed by the regulatory process and will be carried forward into the extended period of operation. Examples of current issues include emergency planning and nuclear plant security. These issues are managed by current regulatory processes and will continue to be managed by them during the period of extended operation. Additional reviews for license renewal are not necessary.

2. Each plant-specific licensing basis must be maintained during the renewal term in the same manner and to the same extent as during the original licensing term.

The Commission has decided to limit the scope of the license renewal process because other issues would, by definition, be relevant to the safety and security of current plant operation. Given the Commission's responsibility to oversee the safety and security of operating reactors, issues that are relevant to both current plant operation and operation during the extended period must be addressed as they arise within the present license term rather than at the time of renewal. In some cases, safety or security might be endangered if resolution of a safety or security matter were postponed until the final renewal decision. Thus, duplicating the Commission's responsibilities in both oversight of current plant operations as well as license renewal would not only be unnecessary, but would waste Commission resources.

NRC Evaluation of Issues Raised in the Petitions and Comments

The Commission has analyzed and addressed the substance of these issues on numerous occasions in the past. Neither the petitions nor the comments raise new issues, nor provide any tangible reason why the careful formulation of the scope of license renewal should be addressed once again. Other procedural mechanisms are available to the public to raise concerns related to the current operations or the renewal of a license for nuclear power plants. An interested party could, for instance, file a request under § 2.206, requesting that the NRC take action to institute a proceeding, under § 2.202 to modify, suspend or revoke a license, or for any other action as may be proper. Furthermore, any interested person may report a safety or security concern, or allegation to the NRC at anytime. The Commission's regulations also provide for numerous opportunities for interested parties to become involved in licensing actions and rulemaking proceedings.

The NRC has reviewed each of the petitioners' requests and provides the following analysis:

1. The petitioners request that the NRC amend its regulations to provide that a renewed license will be issued only if the plant operator demonstrates that the plant meets all criteria and requirements that would be applicable if the plant was being proposed de novo for initial construction. In particular, § 54.29 should be amended to provide that a renewed license may be issued if the Commission finds that, upon a de novo review, the plant would be entitled to an initial operating license in accordance with all criteria applicable to initial operating licenses, as set out in the Commission's regulations, including 10 CFR parts 2, 19, 20, 21, 26, 30, 40, 50, 51, 54, 55, 73, 100 and the appendices to these regulations.

NRC Review: The Commission explicitly considered and rejected the possibility that an application for license renewal would be treated as if it were an initial application for an operating license when it issued the license renewal rule on December 13, 1991; 56 FR 64943. In the statement of considerations (SOC) to that document, the Commission explained:

> It is not necessary for the Commission to review each renewal application against standards and criteria that apply to newer plants or future plants in order to ensure that operation during the period of extended operation is not inimical to the public health and safety. Since initial licensing, each operating plant has continually been inspected and reviewed as a result of new information gained from operating experience. Ongoing regulatory processes provide reasonable assurance that, as new issues and concerns arise, measures needed to ensure that operation is not inimical to the public health and safety and common defense and security are ''backfitted'' onto the plants. (December 13, 1991; 56 FR 64945)

The Commission revised the license renewal rule in 1995, in part to eliminate any ambiguity as to the scope of license renewal. The Commission emphasized that it ''continues to believe that aging management of certain important systems, structures, and components during this period of extended operation should be the focus of a renewal proceeding and that issues concerning operation during the currently authorized term of operation should be addressed as part of the current license rather than deferred until a renewal review.''

(May 8, 1995; 60 FR 22481) However, out of concern for the possibility that the rule ''could be erroneously interpreted as requiring a general demonstration of compliance with the [Continuing Licensing Basis] as a prerequisite for issuing a renewed license,'' the Commission amended § 54.29 (Standards for issuance of a renewed license) to clarify the specific findings required for renewing a license, and by adding § 54.30 (Matters not subject to a renewal review), which specified that the licensee's responsibilities for addressing safety matters under its current licensing basis is not within the scope of license renewal.

Seeking to revisit this determination, the petitioners suggest that the Commission reverse its course, and set forth a new standard for issuance of a renewed license that would be essentially the same as what the Commission rejected in formulating the license renewal rule. Though the Commission appreciates the petitioners' concerns regarding the facilities in their communities, the petitioners offer no new information that would support inclusion of those issues in the license renewal process and that was not previously considered.

2. The petitioners request that corresponding amendments be made to 10 CFR 54.4, 54.19, 54.21, and 54.23, and that 10 CFR 54.30 be rescinded.

NRC Review: The NRC rejects the request that the corresponding amendments be made because it disagrees with the petitioners' contention that the license renewal rule should be amended.

3. The petitioners request that the criteria to be examined as part of a renewal application should include factors such as emergency planning, demographics, siting, site security, and spent fuel storage.

NRC Review:

Emergency Planning: The petitioners request that the Commission consider emergency planning as part of the license renewal process. They both expressed deep concerns that, in light of the change in demographics, local infrastructures and governments would be unable to support large-scale evacuations. Both petitioners suggested that, if either facility were proposed for initial licensing today, that the licenses would be rejected for these reasons. Thus, the petitioners conclude that it is unreasonable to relicense facilities that would clearly be ineligible for initial licensing.

The Commission has already considered evacuation in formulating the license renewal rule and determined that emergency preparedness need not be reviewed again for license renewal (December 13, 1991; 56 FR 64966). Current requirements, including periodic update requirements provide reasonable assurance that an adequate level of emergency preparedness exists at any operating reactor. The Commission explained that ''[t]hrough its standards and required exercises, the Commission ensures that existing plans are adequate throughout the life of any plant even in the face of changing demographics and other site-related factors. Thus, these drills, performance criteria, and independent evaluations provide a process to ensure continued adequacy of emergency preparedness in light of changes in site characteristics that may occur during the term of the existing operating license, such as transportation systems and demographics.'' This determination is also incorporated in the Commission's regulations at § 50.47(a), describing emergency planning requirements, in which a new finding on emergency planning considerations is specifically not required for license renewal. The Commission reaffirmed its determination on emergency planning in its May 8, 1995 (60 FR 22468) amendment of the license renewal rule.

The regulations in §§ 50.47, 50.54(q), and 50.54(s) through (u), and appendix E to part 50, establish requirements and performance for emergency preparedness. These requirements apply to all nuclear power plant licensees and require the specified levels of protection from each licensee regardless of plant design, construction, or license date. The requirements of § 50.47 and appendix E to part 50 are independent of the renewal of the operating license, and continue to apply during the license renewal term. The NRC's regulatory oversight program (ROP) monitors the continued adequacy of a licensee's EP program. In addition, licensees must review the facility's EP program periodically, including working with State and local governments, and have biennial exercises with offsite authorities.

In addition, the Commission recently reasserted its position on emergency preparedness in the relicensing of the Millstone Nuclear Power Station. In that case, the Commission stated, ''[T]he primary reason we excluded emergency-planning issues from license renewal proceedings was to limit the scope of those proceedings to 'age-related degradation unique to license renewal.' Emergency planning is, by its very nature, neither germane to age-related degradation nor unique to the period covered by the Millstone license renewal application.'' Dominion Nuclear Connecticut, Inc. (Millstone Nuclear Power Station, Units 2 and 3), CLI–05–24, 62 NRC 551, 560–561 (2005). If the Commission were to consider emergency planning during the license renewal review, it is not evident that the petitioners' assertions as to the licensability of either site have any factual basis. The petitioners ask rhetorically whether the local societal and infrastructure factors that influenced the original plant licensing changed in a manner that would make the plant less apt to be licensed today. As examples of these factors, the petitioners cited changes in the demographics since the facilities were initially licensed, and deficiencies in the local infrastructure. Yet these broad, conclusory statements without a factual or technical basis are insufficient to support a petition for rulemaking under the Commission's regulations. A petition for rulemaking, as set forth at § 2.802(c)(3), must contain ''relevant technical, scientific or other data involved which is reasonably available to the petitioner.'' Neither petitioner has presented this type of information.

Setting the sufficiency of the petition aside, it is not evident that demographics and siting would necessarily preclude the issuance of an initial operating license at either site. The Commission has addressed these issues, however, in other rulemakings. The final rule on reactor site criteria for nuclear power plants, 10 CFR part 100 (December 11, 1996; 61 FR 65157) addressed examining demographics and siting, both for future reactor facilities and license renewal. Regarding new facilities, the rule states:

> The Commission is not establishing specific numerical criteria for evaluation of population density in siting future reactor facilities because the acceptability of a specific site from the standpoint of population density must be considered in the overall context of safety and environmental considerations. The Commission's intent is to assure that a site that has significant safety, environmental or economic advantages is not rejected solely because it has a higher population density than other available sites. Population density is but one factor that must be balanced against the other advantages and disadvantages of a particular site in determining the site's acceptability. Thus, it must be recognized that sites with higher population density, so long as they are located away from very densely populated centers, can be approved by the Commission if they present advantages in terms of other considerations applicable to the evaluation of proposed sites. (61 FR 65162)

Regarding future population growth, the 1996 final rule explains:

Population growth in the site vicinity will be periodically factored into the emergency plan for the site, but since higher population density sites are not unacceptable, per se, the Commission does not intend to consider license conditions or restrictions upon an operating reactor solely upon the basis that the population density around it may reach or exceed levels that were not expected at the time of site approval. Finally the Commission wishes to emphasize that population considerations as well as other siting requirements apply only for the initial siting for new plants and will not be used in evaluating applications for the renewal of existing nuclear power plant licenses. (61 FR 65163)

Security: Like emergency planning issues, security matters are covered by current review and update requirements. The Commission has rules, regulations and orders that are in place concerning physical protection (security) programs, specifically, parts 26 and 73, orders, and an on-going regulatory process that addresses the petitioners' concerns.

The Commission specifically addressed physical security considerations in the license renewal process in its 1991 final rule. There, it stated that:

''Licensees must establish and maintain a system for the physical protection of plants and materials, in accordance with 10 CFR part 73, to protect the plant from acts of radiological sabotage and prevent the theft of special nuclear material.''

''Application for a renewed license will not affect the standards for physical protection required by the NRC. The level of protection will be maintained during the renewal term in the same manner as during the original license term, since these requirements remain in effect during the renewal term by the language of § 54.35. The requirements of 10 CFR part 73 will continue to be reviewed and changed to incorporate new information, as necessary. The NRC will continue to ensure compliance of all licensees, whether operating under an original license or a renewed one, through ongoing inspections and reviews. Therefore, the Commission concludes that a review of the adequacy of existing security plans is not necessary as part of the license renewal review process.'' (56 FR 64967)

The Commission has regulations governing security and neither petition provides new information to justify including physical security considerations into the license renewal process.

The NRC has reviewed and updated security requirements and continues to do so. The Commission has recently restated its position on the relevance of security issues in license renewal and explained that ''security issues at nuclear power reactors, while vital, are simply not among the age-related questions at stake in a license renewal proceeding.'' Dominion Nuclear Connecticut, Inc. (Millstone Nuclear Power Station, Units 2 and 3), CLI–04–36, 60 NRC 631, 638 (2004).

After the terrorist attacks of September 11, 2001, U.S. commercial nuclear facilities escalated to the highest level of security. Since then, the NRC has issued more than 35 Advisories, Orders, and Regulatory Issue Summaries to further strengthen security at U.S. power reactors. In April 2003, the NRC required by order that power reactors revise their physical security plans, guard training and qualification plans, and contingency plans. Furthermore, the Commission will soon issue a final rule revising the Design Basis Threat (DBT) regulations in 10 CFR 73.1 (See proposed rule, 70 FR 67380; November 7, 2005), and will soon publish a proposed rule for comment amending most of its security regulations for power reactors. (See Proposed Rulemaking—Power Reactor Security Requirements, SECY–06–0126).

The previously cited Commission decisions and agency activities support denial of this section of the petition because security issues are monitored through an on-going regulatory process.

Storage of SNF. The petitioners also contend that the Commission should consider the impact of the long-term storage of SNF, either in pools or at independent spent fuel storage installations (ISFSIs) during license renewal.

NRC Review: In addition to being excluded by definition from the scope of license renewal under part 54, the Commission has also specifically decided to preclude the storage of spent fuel from license renewal in § 51.95(c)(2) of the Commission's regulations, which states that ''The supplemental EIS prepared at the license renewal stage need not discuss * * * any aspect of the storage of spent fuel for the facility within the scope of the generic determination in § 51.23(a) and in accordance with § 51.23(b).'' Section 51.23 contains the Commission's ''Waste Confidence Rule,'' in which the Commission had made a generic finding that ''spent fuel generated in any reactor can be stored safely and without significant environmental impacts for at least 30 years beyond the licensed life for operation (which may include the term of a revised or renewed license) of that reactor at its spent fuel storage basin or at either onsite or offsite ISFSIs.'' The rule therefore does not require analysis of these impacts as part of the environmental report, environmental assessment, or environmental impact statement. The Commission's reasoning for this finding has been documented in great detail and periodically reconsidered since the rule was first issued in 1984. See final rule, Waste Confidence Decision, (49 FR 34658; August 31, 1984); ''Waste Confidence Decision Review,'' (September 18, 1990; 55 FR 38474); ''Waste Confidence Decision Review; Status,'' (December 6, 1999; 64 FR 68005); and ''State of Nevada; Denial of Petition for Rulemaking,'' (PRM–51–08) (August 17, 2005; 70 FR 48329).

Additionally, the NRC notes that the licensing and regulatory oversight of ISFSIs are dealt with under part 72, and that the Commission has specifically determined on several occasions that these issues are therefore outside the scope of license renewal for power reactors. See Nuclear Management Company, LLC. (Palisades Nuclear Plant), CLI–06–17, 63 NRC 727, 733–734 (2006); and Duke Energy Corp. (Oconee Nuclear Station, Units 1, 2, and 3), CLI–99–11, 49 NRC 328, 344 n.4 (1999).

4. *Changes to State and Local Law Affecting Continued Operation:* Both petitions requested that changes to State and local regulations should be considered during the license renewal process. Mr. Spano stated a concern that ''Indian Point must convert from once-through cooling to a closed-cycle design using cooling towers.''

NRC Review: Licensees must comply with applicable local and State regulations. However, nuclear power plant safety is the exclusive province of the Federal Government and cannot be regulated by the States. Under the AEA, the NRC has exclusive authority over the health and safety regulations of nuclear power plants and AEA materials. A State law that directly or indirectly sets nuclear power plant safety standards would thus be facially invalid. However, a State law that regulates the generation, sale, or transmission of nuclear energy produced by a NRC-licensed nuclear power facility would not be pre-empted by the AEA. Thus, to the extent that a nuclear power plant licensee was subject to a State law not pre-empted by the AEA, that licensee would have a continuing obligation to comply with that law. NRC consideration of the applicable State or local laws at the license renewal stage is therefore not necessary or appropriate during license renewal.

Regarding the conversion to closed cycle design, the NRC believes that Mr. Spano is incorrect in two respects. First, the regulation to which he refers is a Federal, not a local or state regulation: Environmental Protection Agency (EPA) regulation on impingement entrainment

(40 CFR Part 122; National Pollutant Discharge Elimination System—Final Regulations to Establish Requirements for Cooling Water Intake Structures at Phase II Existing Facilities; 69 FR 41575; July 9, 2004). Second, the regulation has performance standards that can be met in various ways, one of which is closed-cycle cooling. Thus, it would be incorrect to suggest that EPA's regulations require conversion to a closed-cycle design.

5. The petitioners contend that factors such as an increase in public awareness, technology improvements, and changes in plant economic values are inappropriately excluded from the part 54 license renewal process.

NRC Review: Evolving factors such as public awareness, technology improvements, and plant economic values are beyond the purview of the Commission's regulatory authority.

The NRC notes that the regulatory process considers new scientific and technical knowledge since plants were initially licensed and imposes new requirements on licensees as justified. The NRC engages in a large number of regulatory activities that, when considered together, constitute a regulatory process that provides ongoing assurance that the licensing basis of nuclear power plants provides an acceptable level of safety. This process includes research, inspections, audits, investigations, evaluations of operating experience, and regulatory actions to resolve identified issues. These activities include consideration of new scientific or technical information. The NRC's activities may result in changes to the licensing basis for nuclear power plants through issuance of new or revised regulations, and the issuance of orders or confirmatory action letters. Operating experience, research, or the results of new analyses are also issued by the NRC through documents such as bulletins, generic letters, regulatory information summaries, and information notices. In this way, the NRC's consideration of new information provides ongoing assurance that the licensing basis for the design and operation of all nuclear power plants provide an acceptable level of safety. This process continues for plants that receive a renewed license. In addition, the economic viability of nuclear power is not within the regulatory jurisdiction of the NRC. However, NRC regulations require adequate funds to ensure the decommissioning of commercial facilities (e.g., commercial power reactors and ISFSIs) and for the safe management of SNF. A consideration of costs and benefits of a proposed action and its alternatives are normally part of the NRC's review according to NEPA; however, these factors have been excluded from consideration in the NEPA review for license renewal (see 10 CFR 51.45(c), 51.53(c)(2), and 51.95(c)(2)).

6. PRM–54–03 states that the NRC should revise part 54 to require consideration of a ''worst-case scenario'' in connection with license renewal, to the same extent that these issues must be considered at the initial construction/licensing stage.

NRC Review: All of the requirements regarding design basis accidents analyzed for the original operating license continue to apply for the period of extended operation. There is no relaxation of the requirements applicable for the first 40 years for a licensee applying for license renewal. Analyses that rely on the original licensing term (*i.e.*, 40 years) that meet the criteria contained in § 54.3(a) must be evaluated for license renewal and demonstrated acceptable in accordance with § 54.21(c).

In the environmental context, the NRC's current regulations address accidents for license renewal. Subpart A to appendix B of part 51, Table B–1, ''Summary of Findings on NEPA Issues for License Renewal of Nuclear Power Plants,'' under ''Postulated Accidents,'' states that the NRC has concluded that the environmental impacts of design basis accidents are of small significance for all plants. For severe accident impacts, Table B–1 states that NRC has determined that ''The probability weighted consequences of atmospheric releases, fallout onto open bodies of water, releases to groundwater, and societal and economic impacts from severe accidents are small for all plants.'' However, according to § 51.53(c)(3)(ii)(L) alternatives to mitigate severe accidents must be considered for all plants that have not considered these alternatives.

Public Comments

Integrated Plant Assessment

A commenter states that NRC must include an assessment of moving parts for relicensing. The commenter also states that all license renewal applicants should be required to submit an integrated plant assessment that includes both moving and non-moving parts before being relicensed.

NRC Review: The Commission explicitly considered whether to include active structures and components within the scope of a license renewal review when it amended the license renewal rule in 1995. The Commission concluded that structures and components associated only with active functions can be generically excluded from a license renewal aging management review. Functional degradation resulting from the effects of aging on active functions is more readily determinable, and existing programs and requirements are expected to directly detect the effects of aging. Considerable experience has demonstrated the effectiveness of these programs, including the performance-based requirements of the maintenance rule contained in 10 CFR 50.65. For example, many licensee programs that ensure compliance with technical specifications are based on surveillance activities that monitor performance of structures and components that perform active functions. As a result of the continued applicability of existing programs and regulatory requirements, the Commission determined that active functions of structures and components will be reasonably assured during the period of extended operation.

Performance and condition monitoring for structures and components typically involve functional verification, either directly or indirectly. Direct verification is practical for active functions such as pump flow, valve stroke time, or relay actuation where the parameter of concern (required function), including any design margins, can be directly measured or observed. For passive functions, the relationship between the measurable parameters and the required function is less directly verified. Passive functions, such as pressure boundary and structural integrity are generally verified indirectly, by confirmation of physical dimensions or component physical condition (e.g., piping structural integrity can be predicted based on measured wall thickness and condition of structural supports). It should be noted that although the parts of structures and components that only perform active functions do not require an aging management review, structures and components that perform both passive and active functions do require an aging management review for their intended passive functions only. For example, the casings of safety related pumps and valves perform a passive pressure boundary function and require aging management, but the internals of those pumps and valves, which have an active function, do not.

Therefore, the effects of aging on active structures and components are being managed by existing programs and any aging effects will continue to be managed by these programs for the period of extended operation. The commenter did not provide any

information to justify revising the scope of the license renewal rule.

Use of Current Scientific and Technical Knowledge

One commenter states that regulations must be based on best scientific and technical knowledge and data available, instead of allowing currently operating plants to be grandfathered into compliance based on scientific data from the 1970s that is proven to be outdated.

NRC Review: The NRC believes that the regulations are based on the best scientific and technical knowledge and data available. The regulatory process does consider new scientific and technical knowledge and data available since plants were initially licensed, and imposes new requirements on licensees as justified. All of the Commission's regulations undergo a lengthy and detailed rulemaking process required by the Administrative Procedure Act. During that process, the staff conducts a detailed technical review based in part on its years of experience, and input from the scientific community, public comment on the rulemaking, and industry. For further details, see the previous discussion under comment 6, concerning technology improvements.

This commenter also suggests that the license renewal process simply ''grandfathers'' older plants into compliance with the current regulations. Contrary to the commenter's assertion, the NRC does not ''grandfather'' plants as part of the license renewal. As explained previously, the review conducted within the scope of renewing an operating license does not relieve a licensee from compliance with its current licensing basis, which mandates compliance with the Commission's current regulations. If changes in technology or scientific knowledge occur resulting in new NRC requirements, each licensee must evaluate the new requirements and comply based on the design and licensing basis of their plant.

Seismic Hazard Analyses

One commenter states that updated seismic hazards analyses are not required of licensees, despite the issuance of new regulations that acknowledge the change in scientific knowledge on the differing effects of earthquakes on plant structures. The commenter further states that new seismic regulations (December 11, 1996; 61 FR 65157) only apply to new nuclear power plants.

NRC Review: The December 1996 regulation (part 100) provides basic siting criteria for decisions about future sites and future nuclear power plants. The SOCs of the 1996 final rule stated that to replace the existing regulation with an entirely new regulation would not be acceptable because the provisions of the existing regulations form part of the licensing bases for many of the operating nuclear power plants and others that are in various stages of obtaining operating licenses. Therefore, the Commission concluded that these provisions should remain in effect for currently operating facilities. To ensure the continued safety of currently operating nuclear power plants, the NRC required industry to re-examine their seismic designs as part of the Individual Plant Examination of External Events (IPEEE) program. The results of the IPEEE studies are summarized in NUREG–1742, ''Perspectives Gained from the Individual Plant Examination of External Events (IPEEE) Program.'' Based on the evaluations of the IPEEE program, the NRC staff determined that seismic designs of operating nuclear power plants still provide an adequate level of protection. Since the IPEEE program, the NRC staff has continued to assess the most recent models for estimating seismic ground motion from earthquakes as well as recent models for earthquake sources in seismic regions such as New Madrid, MO, and Charleston, SC. To evaluate the impact of the most recent seismic studies, cited previously, on currently operating nuclear power plants, the NRC has initiated a generic issue resolution process (Generic Issue 199, ''Implications of Updated Probabilistic Seismic Hazard Estimates in Central and Eastern United States,'' ML051600272).

Public Participation

A commenter voiced the concern that the current treatment of license renewal ''unfairly excluded and denies the public and its experts from critical analysis of the risks and benefits of 20 additional years of operational wear and tear on safety-related equipment and from critical analysis of the risks * * * as well as extending and enlarging the adverse environmental impacts from nuclear waste generation * * * and the vulnerability of onsite nuclear waste storage systems to domestic security threats.''

NRC Review: The NRC rulemaking process appropriately includes the public. The public has many opportunities to comment, such as public meetings and hearings under part 54. For special cases concerning security and safeguards (such as rulemaking, orders, and generic communications), procedures are implemented to appropriately ensure the safeguarding of nuclear material and information. In these cases, only persons with a need to know and with the proper security clearance are authorized access to subject proceedings.

The public also had ample opportunity to comment under the various part 54 rulemakings, which evaluated prolonged waste storage.

Public participation is an important part of the license renewal process. Members of the public have several opportunities to question how aging will be managed during the period of extended operation. Information provided by the licensee is made available to the public in various ways. The license renewal application and subsequent correspondence regarding the application are available to the public from the NRC's PDR or from ADAMS, which can be accessed through the NRC's Web site (*http://www.nrc.gov*). Shortly after the NRC receives a renewal application, a public meeting is held near the nuclear power plant to give the public information about the license renewal process and provide opportunities for public involvement. Additional public meetings are held by the NRC during the review of the renewal application. As part of the environmental review of each license renewal application a separate public meeting is held near the nuclear power plant seeking renewal to identify environmental issues specific to the plant for the license renewal action. The result is an NRC recommendation on whether the environmental impacts are so great that they preclude license renewal. This recommendation is presented in a draft plant-specific supplement to the GEIS which is published for comment and discussed at another public meeting. After consideration of comments on the draft, NRC prepares and publishes a final plant-specific supplement to the GEIS. NRC evaluations, findings, and recommendations are published when completed. All public meetings are posted on NRC's Web site. Key meetings are announced in press releases and in the **Federal Register**.

Concerns may be litigated in an adjudicatory hearing if any party that would be adversely affected requests a hearing as is indicated in the notice of opportunity for hearing for each individual license renewal application. The opportunity for hearing is also announced in a press release which is initially posted on the NRC's home page on the Web. In establishing the current hearing process under part 2, the

Commission adopted many changes and undertook additional activities intended to enhance public participation. For example, the final rule extends from 30 to 60 days the time between issuing a **Federal Register** notice for a reactor licensing proceeding and the time for submitting a request for hearing and a petition to intervene. The Commission adopted a mandatory disclosure provision in part 2 that provides for early and comprehensive disclosure of information by all parties, thus avoiding the substantial resources and delay that often is associated with discovery. The Commission also created a prominently displayed button on its Web site titled ''Hearing Opportunities,'' where the public can find notices of intent to file applications, notices of docketing of applications, and notices of opportunity to request a hearing and petition to intervene in major licensing and regulatory actions.

Designs of Older Plants

One commenter on PRM–54–03 was concerned about the designs of older plants, asking whether GE Mark I and II could be approved today and given license extensions.

NRC Response: The NRC emphasizes that it would be incorrect to conclude that any currently operating facility regulated by the NRC, including OCNGS, is less safe than a newly constructed plant. The NRC's continuous regulatory oversight process often requires licensees to correct design deficiencies that could impact continued safe operation. Since OCNGS began operation in December 1969, the licensee has replaced and overhauled many pieces of equipment. The licensee has also installed new, modern systems to replace or supplement original systems that are obsolete or no longer considered adequate. The NRC requires plant operators to continuously test and monitor the condition of safety equipment and to maintain equipment in top condition.

If a licensee applies for license renewal, the NRC reviews both the relevant safety and environmental issues associated with the application. Specifically, the licensee must provide the NRC with an evaluation of the technical aspects of plant aging. The licensee must also describe the aging management programs and activities that will be relied on to manage aging. In addition, to support plant operation for an additional 20 years, the licensee must prepare an evaluation of the potential impact on the environment. The NRC reviews the application and makes a determination concerning the protection of public health and safety and the protection of the environment. The NRC documents its reviews in a safety evaluation report and supplemental environmental impact statement, and performs verification inspections at the licensee's facilities. If NRC approves a renewed license, the licensee must continue to comply with all existing regulations and commitments associated with the current operating license as well as those additional activities required as a result of license renewal. Licensee activities continue to be subject to NRC oversight in the period of extended operation.

Site-Specific Reviews

One commenter states that site-specific environmental analysis is necessary.

NRC Review: The NRC performs plant-specific reviews of the environmental impacts of license renewal in accordance with the National Environmental Policy Act (NEPA) and the requirements of part 51. Certain issues are evaluated generically for all plants, rather than separately in each plant's renewal application. The generic evaluation, NUREG–1437, ''Generic Environmental Impact Statement for License Renewal of Nuclear Plants'' (GEIS), assesses the scope and impact of environmental effects that would be associated with license renewal at any nuclear power plant site such as endangered species, impacts of cooling water systems on fish and shellfish, and ground water quality. A plant-specific supplement to the generic environmental impact statement is required for each application for license renewal.

The GEIS was developed to establish an effective licensing process. It contains the results of a systematic evaluation of the environmental consequences of renewing an operating license and operating a nuclear power facility for an additional 20 years. Those environmental issues that could be resolved generically were analyzed in detail and were resolved in the GEIS. Those issues that are unique because of a site-specific attribute, a particular site setting or unique facility interface with the environment, or variability from site to site, are deferred and are resolved at the time that an applicant seeks license renewal. In the license renewal process, these issues are addressed by the site-specific supplement to the generic environmental impact statement (SEIS).

The GEIS is used to avoid duplication and allow the staff to focus specifically on those issues that are important for a particular plant (*i.e.*, issues that are not generic). This is an appropriate and effective use of the concept of tiering that was issued by the President's Council on Environmental Quality (CEQ) in its 1978 regulations that implemented the requirements of NEPA. Tiering is the process of addressing a general program (such as a nuclear power plant license renewal) in a generic (or programmatic) environmental impact statement (EIS), and then analyzing a detailed element of the program (such as a site-specific action related to the general program) as a supplement to the generic EIS. The CEQ has stated that its intent in formalizing the tiering concept was to encourage agencies ''to eliminate repetitive discussions and to focus on the actual issues ripe for decisions at each level of environmental review.''

In addition, the environmental review of each license renewal application affords several opportunities for public input as described previously.

Nuclear Waste Management

One commenter asserted that the license renewal process disallows public adjudicatory involvement in the extension of nuclear waste generation at reactor sites seeking license renewal without a scientifically approved and demonstrated nuclear waste management program because of reliance on the Waste Confidence Decision of 1990. The commenter stated: ''[t]he license extension process needs to be broadened in its scope and not hide behind an increasing dubious Nuclear Waste Confidence Decision by providing for the public intervention process to independently analyze and challenge inadequate site-specific onsite ''spent'' fuel storage systems including storage ponds and dry cask storage systems.''

Another commenter added his concerns about requiring the most up-to-date science to spent fuel pools and dry cask storage and questions the updating of regulations regarding seismic criteria for ISFSIs.

Another commenter cited an April 2005 report to Congress by the National Academy of Sciences entitled ''Safety and Security of Commercial Spent Nuclear Fuel Storage.'' The commenter stated that the NRC should amend the regulations on the basis of that report to require that security of spent fuel pools and dry cask storage be comprehensively assessed during the relicensing process.

NRC Review: As explained in the denial of PRM–51–08 (August 17, 2005; 70 FR 48329), the Commission stated in its 1999 Waste Confidence Decision Status Report that it would consider undertaking a comprehensive

reevaluation of the Waste Confidence findings if either of two criteria were met: (1) When the impending repository development and regulatory activities run their course; or (2) If significant and pertinent unexpected events occur, raising substantial doubt about the continuing validity of the Waste Confidence findings (December 6, 1991; 64 FR 68007). Because activities involving the high-level waste repository have not run their course, a petitioner would have to demonstrate that ''significant and pertinent unexpected events'' have occurred that have raised ''substantial doubt about the continuing validity of the Waste Confidence findings'' for the Commission to reevaluate its conclusions. Neither PRM–54–02 or PRM–54–03 has provided any demonstration warranting reopening of this decision. Finally, delays of the waste depository at Yucca Mountain are not relevant to these petitions because waste is governed by separate NRC regulations and outside the scope of part 54, and the Waste Confidence Decision determined that spent fuel can be safely stored onsite for 100 years. The petitioners have not shown that waste would be better regulated under part 54.

For spent fuel issues, see previous discussion.

With respect to the comment regarding the National Academy of Sciences Report, the NRC notes that this is a classified report on spent fuel transportation security that was delivered to the House and Senate Committees on Appropriations in July 2004, and that an unclassified summary was published in March 2005. The NRC sent a report to Congress on March 14, 2005, describing the specific actions the NRC took to respond to the Academy's recommendations. The Academy's study is one of many instruments that supplements NRC's understanding of the safety of the interim storage of spent fuel.

Reasons for Denial

The NRC is denying the petitions for rulemaking (PRM–54–02 and PRM–54–03) because they raise issues that the Commission already considered at length in developing the license renewal rule (December 13, 1991; 56 FR 64943), that are managed by the ongoing regulatory process or under other regulations, or that are beyond the Commission's regulatory authority.

The petitioners did not present any new information that would contradict positions taken by the Commission when the regulation was established or demonstrate that sufficient reason exists to modify the current regulations.

Dated at Rockville, Maryland, this 2nd day of December 2006.

For the Nuclear Regulatory Commission.

Luis A. Reyes,

Executive Director of Operations.

[FR Doc. E6–21151 Filed 12–12–06; 8:45 am]

BILLING CODE 7590–01–P

FEDERAL DEPOSIT INSURANCE CORPORATION

12 CFR Chapter III

RIN 3064–AC98

Large-Bank Deposit Insurance Determination Modernization Proposal

AGENCY: Federal Deposit Insurance Corporation (''FDIC'').

ACTION: Advance notice of proposed rulemaking (''ANPR'').

SUMMARY: The FDIC is seeking comment on whether and how the largest insured depository institutions should be required to modify their deposit account systems to speed depositor access to funds in the event of a failure. Today, insured institutions do not track the insured status of their depositors yet the FDIC must make deposit insurance coverage determinations in the event of failure. The current process might result in unacceptable delays if used for an FDIC-insured institution with a large volume of deposit accounts. Such delays would have an impact on depositors' ability to access their funds and are likely to result in a resolution (of the failed institution) significantly more costly to the Deposit Insurance Fund. As currently contemplated, the options discussed in the ANPR would apply only to the 152 insured depository institutions with more than 250,000 deposit accounts and more than $2 billion in domestic deposits, as well as seven additional institutions with total assets over $20 billion, less than 250,000 deposit accounts and at least $2 billion in domestic deposits. In December 2005 the FDIC issued a prior advance notice of proposed rulemaking on this subject (''2005 ANPR'').[1] This ANPR is a follow-up to that issuance. The FDIC is seeking comment on all aspects of the ANPR.

DATES: Comments must be submitted on or before March 13, 2007.

ADDRESSES: You may submit comments by any of the following methods:

- Agency Web site: *http://www.FDIC.gov/regulations/laws/federal/propose.html.* Follow the instructions for submitting comments.
- E-mail: *comments@FDIC.gov.*
- Mail: Robert E. Feldman, Executive Secretary, Attention: Comments/Legal ESS, Federal Deposit Insurance Corporation, 550 17th Street, NW., Washington, DC 20429.
- Hand Delivered/Courier: The guard station at the rear of the 550 17th Street Building (located on F Street), on business days between 7 a.m. and 5 p.m.
- Public Inspection: Comments may be inspected and photocopied in the FDIC Public Information Center, Room E–1002, 3501 North Fairfax Drive, Arlington, Virginia, between 9 a.m. and 5 p.m. on business days.
- Internet Posting: Comments received will be posted without change to *http://www.FDIC.gov/regulations/laws/federal/propose.html*, including any personal information provided.

FOR FURTHER INFORMATION CONTACT: James Marino, Project Manager, Division of Resolutions and Receiverships, (202) 898–7151 or *jmarino@fdic.gov*, Joseph A. DiNuzzo, Counsel, Legal Division, (202) 898–7349 or *jdinuzzo@fdic.gov* or Catherine Ribnick, Counsel, Legal Division, (202) 898–3728 or *cribnick@fdic.gov.*

SUPPLEMENTARY INFORMATION:

I. Background

When handling a depository institution failure the FDIC is required to structure the least costly of all possible resolution transactions, except in the event of systemic risk.[2] In addition, the FDIC is required to pay insured deposits ''as soon as possible'' after an institution fails[3] and places a high priority on providing access to insured deposits promptly.[4] In view of the significant industry consolidation in recent years, the FDIC is exploring new methods to modernize the process to determine the insurance status of each depositor in the event of a depository institution failure. The FDIC's current procedures to determine deposit

[1] ''Large-Bank Deposit Insurance Determination Modernization Proposal, Advance Notice of Proposed Rulemaking,'' 70 FR 73652, December 13, 2005.

[2] Section 13(c)(4)(A)(ii) of the Federal Deposit Insurance Act (''FDI Act'') 12 U.S.C. 1823(c)(4)(A)(ii) and section 13(c)(4)(G)(i) of the FDI Act, 12 U.S.C. 1823(c)(4)(G)(i).

[3] Section 11(f)(1) of the FDI, 12 U.S.C. 1821(f)(1).

[4] Doing so enables the FDIC to: (1) Maintain public confidence in the banking industry and the FDIC; (2) provide the best possible service to insured depositors by minimizing uncertainty about their status and avoiding costly disruptions, such as returned checks, that may limit their ability to meet financial obligations; (3) mitigate the spillover effects of a failure, such as risks to the payments system, problems stemming from depositor illiquidity and a substantial reduction in credit availability; and (4) retain, where feasible, the franchise value of the failed institution (and thus minimize the FDIC's resolution costs).

insurance coverage may result in unacceptable delays if used for an FDIC-insured institution with a large volume of deposit accounts. In developing a new system to determine insurance coverage in a large-bank failure, the FDIC's goals are to minimize disruption to depositors and communities and to minimize costs to the Deposit Insurance Fund.

The ANPR's focus is on FDIC-insured institutions with complex deposit systems. These include those institutions with the largest volume of deposit accounts, currently expected to include 152 insured institutions with over 250,000 deposit accounts and total domestic deposits of at least $2 billion, as well as seven additional institutions with total assets over $20 billion, with less than 250,000 deposit accounts and total domestic deposits of at least $2 billion (''Covered Institutions''). One of the assumptions underlying this ANPR is that no institution would be required to submit detailed customer deposit data to the FDIC unless the institution was in danger of failing.

Insurance Coverage and Insurance Coverage Determination Procedures

The basic FDIC insurance limit is $100,000 per depositor, per insured institution.[5] Deposits maintained by a person or entity in different ownership rights and capacities at one institution are separately insured up to the insurance limit. All types of deposits (for example, checking accounts, savings accounts, certificates of deposit, interest checks and cashier's checks) held by a depositor in the same ownership category at an institution are added together before the FDIC applies the insurance limit for that category. The FDIC generally relies upon the deposit account records of a failed institution in making deposit insurance determination.

To achieve accurate deposit insurance determinations, the FDIC uses a specialized system to analyze depositor data and apply insurance rules. As part of its normal practice, the FDIC obtains depositor data only at the time an insured institution is in danger of failing. These data are received in the weeks or months prior to failure, and the FDIC uses them to determine the insurance status of their depositors and to estimate the total amount of insured funds in the institution. The current FDIC deposit insurance determination process has several steps. Each step varies in time and complexity, depending on the institution's characteristics (primarily the number of deposit accounts and type of deposit account system). The following is a summary of the usual steps involved in the insurance coverage determination process where deposits are passed to an acquiring institution:

- *Closing out the day's business.* In the event of failure, it is the FDIC's practice to close out the insured institution's daily business prior to obtaining the account balances upon which the insurance determination is based. Generally, this process is completed according to the bank's existing procedures. All of the day's check processing and deposit transactions are completed, and end-of-day account balances are determined. This process can require varying lengths of time, across Covered Institutions. For larger institutions this process can run into the early morning hours.
- *Obtain deposit data.* A data file is obtained from the institution or its servicer. Obtaining usable data from the institution or its servicer frequently is a time-consuming process. The FDIC will provide the institution or its servicer with a standard data request. The standard data request requires the institution to provide approximately 45 data fields for each deposit account along with electronic copies of trial balances and deposit application reconciliations. FDIC technical staff works with the insured institution until the standard data set requirements are met and the files provided the FDIC can be processed properly. Generally, the FDIC has at least 30 days advance warning to plan and prepare for a failure. Data are requested in advance to test delivery capabilities, prove the balancing and reconciliation processes and make certain that all required data fields have been included.
- *Process deposit data.* Data are received and validated (including reconciliation to supporting subsidiary systems). Using its Receivership Liability System (''RLS''), the FDIC determines which accounts are fully insured, which are definitely uninsured and which are possibly uninsured (pending the collection of further information). The RLS automatically groups accounts based on the ownership category and the name(s), address, and tax identification number for each account. This process is part of the insurance determination performed on the depositor data received from a failed institution.
- *FDIC holds/debits based on insurance determination results.* Funds deemed insured are passed in full to the acquiring institution. Accounts definitely uninsured are debited for the uninsured amount and a receivership certificate (''RC'') is issued for the debited amount.[6] Holds are placed on accounts deemed potentially uninsured for amounts over the insurance limit, and the account owner is contacted. If additional information is required from the depositor, a meeting is scheduled. These meetings afford the opportunity to collect information necessary to finalize the insurance determination on the possibly uninsured depositors. The typical institution resolved by the FDIC does not have the capability to post a large volume of holds electronically by batch. However, this is an essential requirement for an effective depositor claims process for larger institutions.

Least-Cost Resolution Requirements

As noted above, when handling a depository institution failure the FDIC is required by statute to structure the least costly of all possible resolution transactions, except in the event of systemic risk. Even with systemic-risk failures, the FDIC must conserve costs. Since the introduction of the systemic risk exception in 1991, no exceptions to the least-cost requirement have been made. The FDIC's least-cost requirement was intended to reduce resolution cost and instill a greater degree of market discipline by requiring losses to be borne by uninsured depositors and non-deposit creditors.

When an insured institution fails the FDIC may pay insured depositors up to the insurance limit (a ''pay-off'') or the FDIC may sell the failed institution to another FDIC-insured institution (a ''purchase and assumption transaction''). Another option is to establish a bridge bank or a conservatorship and transfer deposits to that institution.[7] Preservation of the deposit franchise of a failed institution

[5] The coverage for Individual Retirement Accounts and other specific types of retirement accounts was recently increased to $250,000. 71 FR 14629, March 23, 2006. The FDIC's rules and regulations for deposit insurance coverage described the categories of ownership rights and capacities eligible for separate insurance coverage. FDIC refers to these as ''ownership categories.'' There is a description of the primary ownership categories in Appendix A.

[6] The receivership certificate entitles the depositor to a pro rata distribution of the receivership proceeds with respect to their claim.

[7] A bridge bank is a national bank chartered for the purpose of temporarily carrying on the banking operations of a failed institution until a permanent solution can be crafted. See 12 U.S.C. 1821(n). The FDIC's bridge bank authority applies only to the failure of a bank. In the event of the failure of an insured savings association the FDIC could seek a federal thrift charter that would be operated as a conservatorship. As with a bridge bank, the new thrift institution would be a temporary mechanism to facilitate a permanent resolution structure.

is an important facet of minimizing resolution costs.

Complexities Caused by Industry Consolidation

Historically, most insured institution closures occur on a Friday. In almost all cases, the FDIC has made funds available to the majority of insured depositors by the next business day, usually the Monday following a Friday closing. All of the insured institution failures of the past ten years have been of modest size, the largest being Superior Bank, FSB with total deposits at the time of closure of about $2 billion and roughly 90,000 deposit accounts.

Industry consolidation raises practical concerns about the FDIC's current business model for handling institution failures. In most instances, larger institutions are considerably more complex, have more deposit accounts, are more geographically dispersed and have more diverse systems and data-integration issues than small institutions. This is especially true of large institutions that have recently engaged in merger activity. Implications of industry consolidation over the past ten years can be seen in Table 1. If such trends continue, deposits will become even more concentrated in the foreseeable future.

TABLE 1.—TOP TEN INSTITUTIONS, BY NUMBER OF DEPOSIT ACCOUNTS

[In millions]

Rank	1996	2001	2006
1	11.3	33.7	50.6
2	10.4	12.3	30.4
3	5.0	11.6	22.7
4	4.1	10.1	18.7
5	4.0	9.1	17.7
6	3.8	8.3	13.9
7	3.7	8.0	9.0
8	3.7	6.5	8.8
9	3.6	6.2	6.2
10	3.2	5.6	5.9
Total	52.7	111.5	183.9

The single most important facet determining the complexity of the claims process for depositors of a failed institution is the number of deposit accounts. Other factors are important as well, including the volume of daily transactions, the amount of uninsured funds, the number of separate computer systems or ''platforms'' on which deposit accounts are maintained, the speed at which the institution's deposit operations must be resumed following failure and the potential spillover implications of the failure. The FDIC's analysis of these factors as applied to larger banks indicates that the industry can be divided into two segments as shown in Table 2.

TABLE 2.—INDUSTRY SEGMENTATION

Segment	Definition	Number	% of Total	Total domestic deposits (Billions)	% of Total
Covered	Total number of deposit accounts over 250,000 and total domestic deposits over $2 billion or total assets over $20 billion regardless of the number of deposit accounts and total domestic deposits over $2 billion.	159	1.8	$4,445	69.1
Non-Covered	All insured institutions not covered	8,619	98.2	1,992	30.9
Total		8,778	100.0	6,437	100.0

Note: Data are as of June 30, 2006.

Large institutions typically have more accounts, more complex deposit systems and require a rapid resumption of deposit operations in the event of failure to protect the institution's franchise value. With Covered Institutions the speed of the claims process could be greatly enhanced by the FDIC obtaining a timely data download and by improving the institution's capability to automatically post holds or debit uninsured funds.

Covered Institutions are more likely to fail due to liquidity reasons prior to becoming critically undercapitalized under prompt corrective action.[8] Most likely, this will be a more rapid and less orderly event. Institutions more susceptible to a liquidity insolvency pose greater problems for the FDIC. Such institutions have a less predictable failure date. The failure could occur on any day of the week, and pre-failure access to the institution may be limited because liquidity insolvency oftentimes is difficult to anticipate, and because liquidity insolvency can occur in a very compressed period of time.

Covered Institutions present unique challenges in the event of failure. For the smaller, less-complex Covered Institutions these challenges may be only modest; for the larger, more complex members of the group they are more severe. As noted, the FDIC is concerned about both the size and complexity of the deposit operations of Covered Institutions and the necessary speed of the claims process to make funds available quickly to depositors and maximize the institution's franchise (or re-sale) value.

II. The 2005 ANPR

The 2005 ANPR[9] requested comment on three options for enhancing the speed at which depositors of the larger, more complex insured institutions would receive access to their funds in the event of failure.[10] All of the options entailed modifications to the deposit account systems of Covered Institutions to facilitate the insurance determination process. Option 1 was to require the institution to install on its deposit system a capability that, in the event of failure, would place a temporary hold on a portion of the balances of large deposit accounts. The percentage hold amount would be determined by the FDIC at the time of failure, depending mainly on estimated losses to uninsured depositors.[11] Such provisional holds

[8] 12 U.S.C. 1831o.

[9] 70 FR 73652 (Dec. 13, 2005).

[10] In the 2005 ANPR Covered Institutions were defined to include all insured institutions with total number of deposit accounts over 250,000 and total domestic deposits over $2 billion. A full description of the three options is provided in the 2005 ANPR.

[11] Uninsured depositors are entitled to a pro rata distribution of the receivership proceeds with respect to their claim. The FDIC—at its discretion—may immediately distribute receivership proceeds in the form of advance dividends at the time the bridge bank is opened. Advance dividends are

Continued

would be placed immediately prior to the day the institution reopens for business (generally expected to be the next business day) as a bridge bank (discussed above). The institution also would need to be able to automatically remove these holds and replace them with the results of the deposit insurance determination when they become available. The insurance determination would be facilitated by certain depositor data (such as the depositor's name, address, and tax identification number) maintained by the institution in a standard format. The data would include a unique identifier for each depositor and the insurance ownership category of each account.

Option 2 was similar to Option 1 except that the standard data set would have included only information that institutions currently possessed. The option would not have required institutions to create a unique identifier for each depositor or to classify each account by ownership category.

Option 3 was to require the largest ten or twenty insured institutions (in terms of the number of deposit accounts) to know the insurance status of their depositors and to be able to deduct expected losses to uninsured depositors in the event of failure.

Comments on the 2005 ANPR

The FDIC received 28 comments on the 2005 ANPR.[12] Six were from trade organizations, fourteen from large institutions, four from community banks and four from others. Most commenters expressed an appreciation of the objectives set forth in the 2005 ANPR. The letter submitted jointly by American Bankers Association, America's Community Bankers and The Financial Services Roundtable ''recognize[d] that the Federal deposit insurance system's viability depends on the principle that no financial institution is either too big or too small to fail. The development of prudent systems to prepare for and respond to the failure of any size institution is an important component of the Corporation's receivership functions.'' [13] Nevertheless, the majority of commenters generally opposed implementation of any of the options offered in the 2005 ANPR. Eighteen of the twenty-eight comment letters (sixty-four percent) indicated opposition to the 2005 ANPR, citing high costs and regulatory burden. The aforementioned joint comment letter from three trade associations ''urge[d] the Corporation to reconsider its program to implement the 2005 ANPR.'' [14] A complete summary of the comments received on the 2005 ANPR is provided in Appendix B.

III. The Revised ANPR

Process Overview

Under the process discussed in the ANPR, in the event of failure a Covered Institution would complete its nightly processing cycle according to the institution's normal practices. After completion of this nightly processing cycle provisional holds would be placed on large deposit accounts through the institution's deposit systems as specified by the FDIC. The placement of provisional holds will allow the opening of a bridge bank the day following failure, yet guard against the loss of uninsured deposit funds subject to loss. A standard set of data files reconciled to the institution's supporting subsidiary systems will then be provided to the FDIC, to be used as the basis for making deposit insurance determinations. The results of the insurance determination will be returned to the bridge bank, likely within several days. At this point the provisional holds will be removed en masse to be replaced with the results of the deposit insurance determination. The FDIC requests comment on all aspects of this contemplated approach, including cost/benefit issues and alternative approaches that would allow the FDIC to accomplish its objectives of affording a timely deposit insurance determination and a prompt release of funds to depositors.

Continuation of Business Operations

For the purposes of implementing the possible requirements explained in the ANPR, Covered Institutions should assume that their deposit operations would continue post failure in a bridge bank or a federally chartered mutual association. In the event of failure the bank would complete the nightly deposit processing cycle according to the institution's normal practices. For insurance determination purposes, the FDIC would use the deposit account balance generated at the end of the nightly processing cycle. This is the account balance against which provisional holds would be calculated.

Tiered Approach

Based on the comments received on the 2005 ANPR and additional analysis, the FDIC has refined its thinking in terms of how to approach the issues discussed in the 2005 ANPR. The FDIC is putting forward for comment an approach under which each insured depository institution would fall into one of three categories: Tier 1 Covered Institutions, Tier 2 Covered Institutions and Non-Covered Institutions. Tier 1 Institutions would include the largest, most complex institutions among those having at least 250,000 deposit accounts and more than $2 billion in domestic deposits. Tier 2 Institutions would include institutions of lesser complexity among those having at least 250,000 deposit accounts and more than $2 billion in domestic deposits, and those with at least $20 billion in domestic assets and $2 billion in domestic deposits not falling under the definition of a Tier 1 Institution. Non-Covered Institutions would be any insured depository institution not meeting the definition of a Tier 1 or 2 Covered Institution. Non-Covered Institutions would be exempt from the requirements discussed in the ANPR.[15]

Compared to the 2005 ANPR, the definition of a Covered Institution has been expanded to include insured institutions with at least $20 billion in domestic assets and $2 billion in domestic deposits, regardless of the number of accounts. While some such institutions may have far fewer than 250,000 deposit accounts, the FDIC is concerned that—for such institutions—a Friday closure date cannot be expected, a bridge institution will need to be established quickly and that a high percentage of deposit accounts may involve uninsured funds. The FDIC is interested in comments on the challenges presented by such institutions in the event of failure compared to other institutions with a comparable number of deposit accounts. Should the definition of Covered Institutions be expanded to include institutions with fewer than 250,000 deposit accounts?

based on the expected recovery to uninsured depositors.

[12] The 2005 ANPR comment letters are available at: *http://www.fdic.gov/regulations/laws/federal/2005/05comlargebank.html.*

[13] Comment letter provided by American Bankers Association, America's Community Bankers and The Financial Services Roundtable dated March 13, 2006 in response to the 2005 ANPR, page 3.

[14] American Bankers Association, America's Community Bankers and The Financial Services Roundtable, page 4.

[15] As part of its claims-process modernization effort, the FDIC is streamlining the business processes it uses to facilitate a deposit insurance determination. This involves replacing the current Receivership Liability System (noted above) with a new system incorporating more advanced technologies to enhance automation. These changes will improve the FDIC's ability to process efficiently a large number of accounts and provide timely customer support to uninsured depositors. Enhancements to the FDIC's claims system would be facilitated by a closer interaction with a Covered Institution's deposit systems.

Requirements for Different Tiers/ Explanation of Requirements

As explained more fully below, under the approach being put forward for comment, a Tier 1 Covered Institution would be required to have in place systems that could: (1) Provide a unique depositor identification (''ID'') for each depositor; (2) implement automated provisional holds against deposit accounts; (3) supply a standard data framework (where the form and content of this data structure will be developed in cooperation with insured institutions); (4) remove provisional holds; (5) supply an agreed upon standardized data structure to compute a trial balance; and (6) post holds and debits in batch mode resulting from the deposit insurance determination results. A Tier 2 Covered Institution would be subject to the same requirements as a Tier 1 Covered Institution except it would not have to provide a unique depositor ID for each depositor.[16] Each of these requirements is described below, along with specific questions on which the FDIC requests comment.

(a) Unique Depositor ID

Tier 1 Covered Institutions would be required to uniquely identify each depositor. The FDIC requests comments on all aspects of this possible requirement. In particular:

- To what extent can Covered Institutions uniquely identify depositors using current systems and procedures?
- What would be the best method(s) to use for depositor identification? Should the FDIC specify the format to be used for depositor identification, or should this be left to the Covered Institution to determine?
- How expensive would it be for Covered Institutions to supply a unique identifier for each depositor? Is this something that Covered Institutions are considering for internal business purposes? If not, how do Covered Institutions determine common ownership for relationship management, cross-selling, risk management or other purposes? How long would it take to implement a unique depositor identification process? To what extent is the answer to that question a function of running deposit accounts on more than one platform?
- How reliable would the data be in identifying each depositor? To what extent are Covered Institutions able to identify account owners (as opposed to trustees, managers, beneficiaries, etc.) from source files being supplied to the FDIC for insurance determination purposes? Does this differ by types of accounts; for example, checking accounts versus (brokered) CDs?
- Could Covered Institutions uniquely identify depositors within a single legacy data system? Is there an accompanying Customer Information File (''CIF'') available for each legacy data system? Could the Covered Institutions provide instructions or rules to assist the FDIC to integrate depositor records across these legacy data sources?

(b) Provisional Holds Against Deposit Accounts

Under the suggested approach, Tier 1 and 2 Covered Institutions would be required to have in place an automated process for implementing a one-time FDIC provisional hold immediately following the completion of the nightly deposit processing cycle following a failure. The contemplated provisional hold algorithm contains variables that would be supplied by the FDIC only on the day of failure. Provisional holds would be applied to individual accounts (commonly owned deposits are not aggregated). Provisional holds would vary by individual account balance and type. Under one approach: (1) Deposit accounts with balances below $X dollars would not be subject to a provisional hold; (2) deposit accounts with balances between $X and $100,000 would be subject to a provisional hold of Y percent; and (3) deposit accounts with balances above $100,000 would be subject to a provisional hold of Z percent.

The FDIC would supply the values X, Y and Z to the institution on the day of failure. Those values could differ depending on whether the account is a demand deposit/NOW account, money market deposit/savings account or time deposit. X could be set at a higher level for DDA systems than for time deposit systems, for example. The values X, Y and Z also could differ depending on whether the institution categorizes the account as consumer or business. For these purposes, the account category would be the one normally used by the institution, rather than a definition more consistent with FDIC insurance rules. FDIC research indicates the likely value of X would fall between $30,000 and $80,000. Based on account-size distributions provided by a sample of insured institutions, this potential threshold range is expected to exclude over 90 percent of deposit accounts from the provisional hold process at most institutions. Given the historical loss experience for large institutions and their general liability structure, the FDIC expects that the values of Y and Z would be less than 15 percent.

The FDIC requests comments on all aspects of these possible requirements concerning provisional holds on deposits. In particular:

- What more would Covered Institutions need to know to design and implement such a system?
- What would be the overall cost to a Covered Institution for developing the capability to automatically post provisional holds?
- The deposit systems of many Covered Institutions use software purchased from a small group of vendors. To what extent would vendor-based software changes help mitigate the overall implementation costs of this program?
- Some Covered Institutions use a servicer to process deposit accounts, and some Covered Institutions share the same deposit servicer. To what extent would implementation changes made by the servicer mitigate the costs of this program?
- A provisional hold could potentially trigger complications in the back office of the bridge bank due to an increase in returned items. This might be mitigated if a large percentage of a depositor's checking account balance is made available immediately. If, for example, fifteen percent holds were placed on transaction accounts with balances over $50,000, how significant would the impact be for the back office of the bridge bank? Would overdraft facilities already in place with depositors mitigate this potential impact? If the impact is expected to be significant, how could it be mitigated? Would there be any potential complications in the back office of the bridge bank due to holds placed on MMDA, savings accounts or time deposits? If so, what types of complications, and how could they be mitigated?
- The FDIC may set Y and Z to the same percentage. If the FDIC required institutions to be prepared for only one ratio rather than two, would that reduce the system development costs, the reliability of the algorithm or the speed of running the algorithm? If so, by how much? If only one ratio were used, the FDIC might choose to apply the ratio to the entire balance of accounts with over $X dollars, or it might apply the ratio to only the portion of the balance that exceeds $X. The FDIC does not anticipate requiring institutions to be prepared for both options. Would this choice influence the system

[16] Each institution in Tiers 1 and 2 would be required to provide the FDIC with the names of the individuals responsible for the deposit data file(s), provisional holds, communications, customer service and the removal the provisions holds and implementation of the results of the deposit insurance determination.

development costs, the reliability of the algorithm or the speed of running the algorithm? If so, which choice would be better, and to what degree would it be better?

• The FDIC may choose to set the same X, Y and Z for all deposit systems (as opposed to different thresholds or ratios for transaction account systems, MMDA/Savings systems and time deposit systems). If the FDIC required institutions to be prepared for only one set of thresholds and ratios, would that reduce the system development costs, the reliability of the algorithm or the speed of running the algorithm? If so, by how much?

• The FDIC may choose to set the same X, Y and Z for all account categories. If the FDIC required institutions to be prepared for only one set of thresholds and ratios, would that reduce the system development costs, the reliability of the algorithm or the speed of running the algorithm? If so, by how much?

• Where do individual retirement accounts (''IRAs'') reside? Are they clearly coded or otherwise identified on bank records in a way that would allow their ready identification? Are all IRAs generally found in time deposit systems, in other systems, or are they distributed across multiple systems?

• Since the FDIC would want to continue operating the institution on the business day after failure, the provisional hold process must be completed quickly. The time thresholds may be challenging especially if the institution does not fail on a Friday. Are there ways to structure the provisional hold requirements that would make it easier for institutions to meet the associated timing requirements? For example, would it be helpful if the FDIC agreed that $X would never fall below a predetermined amount (say $30,000 or $40,000)?

• How long would you expect such a program to run?

• What problems would occur if holds were placed during the first day (that is, before the evening check-clearing process) rather than before opening for business on the first day?

(c) The Generation of a Standard Data Structure Reconciled to the Supporting Subsidiary Systems

A fundamental aspect of this ANPR is the development of a standard data framework which does not place an onerous burden on Covered Institutions, while ensuring that the FDIC is provided with an optimum set of data structures within that framework that enable a timely and accurate insurance determination process. The FDIC seeks industry input into the development of this standard data framework. Industry participation will be important in assuring that the FDIC specifies standards that are adequate for making deposit insurance determinations without being unduly burdensome to Covered Institutions. Consequently, the FDIC seeks comment on all aspects pertinent to the development of this standard. Appendix C provides representative standard data elements.

• What would be the overall cost to a Covered Institution to develop a capability to produce a standard data structure complete with associated linked data sources for information such as account ownership or other maintained information relationships required to define a deposit account, as well as provide a data structure to facilitate the generation of a trial balance and reconciliations of accounts? Could a Covered Institution develop and deploy this standard in 18 months? Does the Covered Institution have a standard deposit account data framework that they would recommend the FDIC adopt as a standard to support this deposit account definition process?

• The deposit systems supporting many Covered Institutions use software purchased from a small group of vendors and servicers. Could a vendor or servicer develop the standard data structure and the necessary processing logic to pull the data into the specified standard format for multiple institutions or does your institution have unique details that would prevent this from occurring?

• To meet the proposed standard data structure requirement, institutions may have to link records from the CIF with the deposit systems or provide a key for linking elements so data from the CIF could be linked to individual account owner records. This would be more complex than a standard data structure that only included items from the deposit systems, but it would enable the FDIC to make timely insurance determinations. Once the systems had been developed and tested, how much longer would it take for an institution to prepare a standard data structure that included CIF and deposit system items, compared to one that included only deposit system items?

• The FDIC would require transmitted deposit balances to reconcile to the actual trial balance, both principal and interest dollar amounts and the deposit record counts. How does reconciliation affect timeliness? Can the process be developed in advance and automated?

• The standard data set should not contain records for foreign deposits or international banking facility (''IBF'') accounts, since they are not defined as deposits for insurance purposes. Do foreign deposits reside on separate deposit systems? Would your institution have any problems creating a data set that excludes foreign deposits not payable in the U.S.? If so, how might these problems be mitigated? Would your institution have problems placing a blanket freeze on all foreign deposits and IBF accounts so that the funds could not be drawn on the bridge bank?

• Deposits held by the institution's subsidiaries and affiliates should be included in the standard data set. For deposit insurance purposes all deposits owned by the same FDIC charter, whether an affiliate or subsidiary, should be included in the data call if the account is held at the institution. Would your institution have any problems complying with the standard data structure described above that includes the full balance of deposits held by subsidiaries and affiliates? If so, how might these problems be mitigated?

• Would Covered Institutions have difficulty supplying complete and reliable data for any of the items listed in Appendix C? If so, which ones? Do problems arise because the data are incomplete (available for some accounts but not others) or for other reasons?

• One of the items envisioned in the standard data structure is a flag for bank-owned accounts (the institution's payroll accounts, for example), but not accounts owned by others and managed by the institution (trust accounts, for example). These accounts are not deposits and thus should be excluded from the deposit insurance determination process. How costly would it be for institutions to provide a reliable flag for these accounts or remove them from the standard data set prior to transferring it to the FDIC? If no flag were available, the FDIC might place provisional holds on these accounts. Would such an action cause problems in the back office? If so, how serious a problem might it cause?

• In the event of failure, depositor data may be transmitted to the FDIC or its designee. One method for data transfer of the deposit file(s) is via secure FTP, requiring financial institutions or their servicers to use VPN to communicate with the FDIC over the Internet. What are the relative costs and benefits of using a secure FTP? Are there more effective, less costly ways of transmitting data to the FDIC?

• The transmission method may depend on the number of accounts in the transmission data sets. For some Covered Institutions the FDIC may have to deploy hardware to the failed

institution. How would Covered Institution suggest this process be handled and which location would be optimum to support FDIC requirements?

(d) Posting the Insurance Determination Results and Removal of Provisional Holds

The FDIC would forward insurance results to be incorporated into the institution's deposit systems as soon as possible, perhaps as quickly as the day following the receipt of the standard data set. The results would dictate debits and holds to be placed by batch in an automated fashion on deposit accounts. The processing stream would be as follows: FDIC would notify Operations/IT that results are available. This notification would trigger a process whereby all provisional holds are removed en masse. After provisional holds have been removed, the bridge bank would run replacement transactions. Depending on the depositor's insurance status, the replacements could include: (1) No replacement (that is, just release the provisional hold); (2) a debit of the account by the amount specified by the FDIC; (3) a debit and credit of the account (that is, debit the uninsured balance and credit an advance dividend); and (4) placement of a FDIC hold that might not be the same amount as the provisional hold. In a few cases, new FDIC debits or holds may be placed on accounts that did not have a provisional hold. Both the removal of provisional holds and the placement of new FDIC transactions would have to be accomplished in the same nightly processing schedule and the institution would have to be open for business as usual on the next business day.

As to this proposed procedure, the FDIC requests responses to these specific questions:

- What would be the overall cost to a Covered Institution for developing the capability to remove provisional holds and automatically process account debits and holds based on the insurance determination results?
- Would the en masse removal of provisional holds, coupled with the placement of FDIC debits, credits and holds during the same processing schedule, raise operational issues? If so, what types of issues, and how might they be mitigated? Would the system development costs or operational risk be reduced if this process were only scheduled on a weekend?
- The FDIC is contemplating providing institutions with an ASCII/EBCDIC text file with debit, credit and hold transactions based on the insurance determination. Could the data contained in such a file be readily reformatted so that the transactions can be processed on the institution's deposit systems? Is there a format other than ASCII/EBCDIC that is easier and less costly for institutions? If so, what is it? Would it be helpful for the FDIC to provide institutions a sample data set (for testing) during the implementation period?
- In some cases, all accounts with debits would also have credits. The FDIC anticipates that this would simplify the reconciliation process and the settlement process between the insurance fund and the bridge bank, since the debits relate to uninsured balances and the credits relate to advance dividends. This policy would, however, increase the number of required transactions. Is the larger number of transactions problematic? If so, what are the problems and how might they be mitigated?
- One possible way to reduce the number of transactions in a given processing schedule would be to segment the process; for example, release provisional holds and replace them for only one system (or for selected accounts) per night until they are all completed. The FDIC anticipates that the costs associated with segmenting this process in some way would exceed the associated benefits. Do you believe this would be the case? If not, what benefits and costs would accrue for a segmented process and how should it be segmented?

Debiting time deposits may be operationally more difficult than transaction or savings accounts. It might not be possible to debit a certificate of deposit (''CD'') to reflect a loss resulting from the insurance determination results. Debiting a CD may require that the existing CD be closed and new one opened with the lesser dollar amount.

- What are the operational difficulties of requiring a cancellation of a large number of CDs? What is the best way to automate this process? Are there ways to build upon processes that are already in place for rolling over or paying out CDs? If so, how? The FDIC expects that, in the event of a large institution failure, its new claims system will create a file that contains the data needed by institutions to cancel an uninsured CD and replace it with a smaller CD. What information should be included in that file? What format should it take? Would it be helpful for the FDIC to provide institutions a sample data set (for testing) during the implementation period?

IV—Implementation and Testing Requirements

The FDIC is considering an approach under which an insured institution meeting the definitional requirements of a given tier for the two quarters prior to the effective date of the requirements discussed in the ANPR would have eighteen months to fully implement the respective requirements. The FDIC asks specific comment on whether more time would be needed to implement Tier 1 requirements. For example, should the implementation period be fifteen months for Tier 2 Covered Institutions and eighteen months for Tier 1 Covered Institutions?

Also, under the contemplated approach, regarding a merger of two or more Non-Covered Institutions resulting in Covered Institution status, the requirements of the new tier would have to be fully implemented within, for example, eighteen months following the completion of the merger. Would this be a reasonable way to handle the situation?

Under the contemplated approach, the FDIC would conduct an initial test at each Covered Institution sometime after the initial implementation period ends.[17] Once the initial test is completed successfully, the FDIC anticipates that it would conduct additional tests infrequently at healthy institutions that do not make major changes to their deposit systems—perhaps only once every three-to-six years. More frequent testing may be necessary for institutions that move to Tier 1 from Tier 2, make major acquisitions, experience financial distress (even if the distress is unlikely to result in failure) or undertake major system conversions.

To reduce the frequency of FDIC testing and ensure ongoing compliance, the FDIC might consider requiring that Covered Institutions conduct tests in-house on a regular basis (perhaps every year) and provide the FDIC with evidence that the test was conducted and a summary of the test results. If the FDIC chose to do this, what type of protocols should be set? Should the FDIC prepare a standard report format for the summarized test results? Would it be less costly for institutions to submit test results to the FDIC regularly to reduce the FDIC testing frequency (say from every three years to every five-to-six years)? Which testing option would result in a more reliable process? Why?

[17] In addition to testing, the FDIC might require that information contact points be validated (and updated as needed) every three-to-six months.

In addition, the FDIC would have to test certain other requirements inside the institution, including but not limited to the ability to remove provisional holds en masse and place new holds and debits using a data set that meets the FDIC standards. The testing of processes involving transmittal of data to or from the FDIC would use dummy or scrambled data.

To protect financial privacy, the FDIC's testing process would not require that Covered Institutions transmit any sensitive customer data outside of the institution's premises. Therefore, all testing involving sensitive customer data would be conducted on the institution's premises. The FDIC does not intend to remove sensitive data from the institution's premises under the proposed testing process. These items include, but might not be limited to the completeness and reliability of the standard data structure, the format requirements of the standard data structure and the accuracy and effectiveness of the provisional holds.

V—New Deposit Accounts

Covered Institutions currently are not required to know the insurance status of depositors or inform them of this status when a new account is opened. The FDIC is interested in comments on whether Covered Institutions should be encouraged or required to know the insurance status of each new deposit account and/or notify customers of this status when a new account is opened.

Knowing the identity of each depositor is an important aspect of a deposit insurance determination. If Tier 1 Covered Institutions are not required to have a unique ID for each depositor, should the FDIC require a unique depositor ID to be assigned by Covered Institutions when a new account is opened? The insurance category of each account is necessary for the insurance determination process, but is not a requirement proposed in this ANPR. Should the FDIC require that Covered Institutions determine the insurance category of each new deposit account?

VI. Request for Comments

The FDIC realizes that the requirements discussed in the ANPR could not be implemented without some regulatory and financial burden on the industry. The FDIC is seeking to minimize these costs while at the same time ensuring it can effectively carry out its mandates to make insured funds available quickly to depositors and provide a least-cost resolution for Covered Institutions. The FDIC would like comment on the potential industry costs and feasibility of implementing the options in the ANPR. The FDIC also is interested in comments on whether there are other ways to accomplish its goals that might be more effective or less costly or burdensome. In other words, what approach or combination of approaches (which may include new alternatives) most effectively meets this cost/benefit tradeoff? The FDIC seeks comments on all aspects of the ANPR.

Between 2004 and 2006 the FDIC met with six would-be Covered Institutions and four software vendors/servicers for Covered Institutions. These meetings took place at various stages in the development process. The FDIC found these meetings to be extremely helpful and is requesting additional meetings with interested parties. FDIC staff is willing to travel to facilitate the meeting or structure a teleconference. Any such meetings will be documented in the FDIC's public files to note the institution's general views on the ANPR or answers to questions that have been posed. In past meetings, the institutions and software vendors/servicers discussed proprietary information. Such confidential information would not be made public. The record of the meeting could be prepared by the institution or the FDIC. Any institution or organization wishing to discuss this proposal in more detail or influence the way in which it is implemented should contact James Marino, Project Manager, Division of Resolutions and Receiverships, (202) 898–7151 or *jmarino@fdic.gov.*

During 2006 the FDIC met with several major software vendors/servicers to discuss an earlier version of the proposal outlined in this ANPR. These meetings provided useful insights into the operations of different deposit software and resulted in changes to the proposal. A previous version of the FDIC's proposal included a ''freeze'' on time deposits rather than the use of provisional holds against these accounts. The discussions with the software vendors resulted in an elimination of the ''freeze'' in favor of using provisional holds against all accounts. Further, an earlier version of the FDIC's proposal included three tiers for Covered Institutions rather than two. The third tier—to be comprised of the least complex of the Covered Institutions—did not include a unique depositor ID or provisional hold requirement. The original purpose of the three-tiered approach was to reduce industry implementation costs. The software vendors indicated a less varied set of requirements would be easier and less costly to implement, hence the movement to a suggested two-tiered approach.

Appendix A—Primary FDIC Deposit Insurance Categories

Insurance category	Description
1. Single Ownership	Funds owned by a natural person including those held by an agent or custodian, sole proprietorship accounts and accounts that fail to qualify in any other category below. Coverage extends to $100,000 per depositor.
2. Joint Ownership	Accounts jointly owned as joint tenants with the right of survivorship, as tenants in common or as tenants by the entirety. Coverage extends to $100,000 per co-owner. • The account title generally must be in the form of a joint account (''Jane Smith & John Smith''). • Each of the co-owners must sign the account signature card. (This requirement has exceptions, including certificates of deposit.) • The withdrawal rights of the co-owners must be equal.
3. Revocable Trust	Accounts whereby the owner evidences an intention that upon his or her death the funds shall belong to one or more qualifying beneficiaries. For each owner, coverage extends to $100,000 per beneficiary. • The title of the account must include ''POD'' (payable-on-death) or ''trust'' or some similar term. • The beneficiaries must be specifically named in the account records. (This requirement applies to informal ''POD'' accounts but does not apply to formal 'living trust' accounts.) • The beneficiaries must be the owner's spouse, children, grandchildren, parents or siblings.
4. Irrevocable Trust	Accounts established pursuant to an irrevocable trust agreement. Coverage extends to $100,000 per beneficiary. • The account records must indicate that the funds are held by the trustee pursuant to a fiduciary relationship. • The account must be supported by a valid irrevocable trust agreement. • Under the trust agreement, the grantor of the trust must retain no interest in the trust funds. • For ''per beneficiary'' coverage, the interest of the beneficiary must be ''non-contingent.''

Insurance category	Description
5. Self-Directed Retirement ..	Individual retirement accounts under 26 U.S.C. 408(a), eligible deferred compensation plans under 26 U.S.C. 457, self-directed individual account plans under 29 U.S.C. 1002 and self-directed Keogh plans under 26 U.S.C. 401(d). Coverage extends to $250,000 per owner or participant. • The account records must indicate that the account is a retirement account. • The account must be an actual retirement account under the cited sections of the Tax Code.
6. Corporation, Partnership or Unincorporated Association.	Accounts of a corporation, partnership or unincorporated association. Coverage extends to $100,000 per entity. • The account records must indicate that the entity is the owner of the funds or that the nominal accountholder is merely an agent or custodian (with the entity's ownership interest reflected by the custodian's records). • The entity must be engaged in an ''independent activity.'' • The entity must not be a sole proprietorship (which is treated as a single ownership account).
7. Employee Benefit Plan	Deposits of an employee benefit plan as defined at 29 U.S.C. 1002, including any plan described at 26 U.S.C. 401(d). Coverage extends to $100,000 per participant. • The account records must indicate that the funds are held by the plan administrator pursuant to a fiduciary relationship. • The account must be supported by a valid employee benefit plan agreement. • For ''per participant'' coverage the interests of the participants must be ascertainable and non-contingent.
8. Public Unit	Funds of ''public units'' or ''political subdivisions'' thereof. Coverage extends to $100,000 for interest bearing deposits and $100,000 for non interest bearing deposits for each official custodian of the public unit or subdivision. • For separate coverage for the non interest bearing deposits, the insured financial institution must be located in the same state as the public unit. • The account records must indicate that the funds are held by the custodian in a custodial capacity. • For ''per custodian'' coverage, the custodian must be a separate ''official custodian.'' • For ''per subdivision'' coverage, the governmental entity must be a separate ''political subdivision.''

Appendix B—Comment Summary

The FDIC received 28 comment letters in response to the 2005 ANPR. While most of the comment letters touched on multiple points, they generally focused on a common theme. The various themes of the letters are summarized in Table 3. Sixty-four percent of the comment letters indicated opposition due to the view that implementation costs of the options outweighed any potential benefits, high potential costs and regulatory burdens, or the options simply are not needed. In other words, these commenters expressed the general belief that the FDIC failed in the 2005 ANPR to make a compelling case in favor of any of the options in light of their perceptions of the costs.

TABLE 3.—2005 ANPR COMMENT SUMMARY

General comment	Number	Percentage
Costs Outweigh Benefits	10	35.7
Opposed Due to Costs/Burdens	5	17.9
Options Are Not Needed	3	10.7
Do Not Include Our Institution as Covered	2	7.1
Supportive of at Least One Option, but in Some Cases Expressed Concern Over Costs	5	17.9
Too-Big-To-Fail and/or Market Discipline	2	7.1
Options Raise Significant Privacy Issues	1	3.6
Total	28	100.0

The 2005 ANPR noted that the FDIC was considering expanding the definition ofa Covered Institution to include any institution with at least $20 billion in total assets, regardless of the total number of deposit accounts. Two institutions falling into this category commented that the definition of a Covered Institution should not be changed from the original definition of at least 250,000 deposit accounts and $2 billion in domestic deposits.

Some commenters were expressly supportive of one or more of the options, but in some cases indicated concern over costs. In particular, the letter from Dollar Bank stated it ''understands and supports the need for the FDIC to have a rapid and effective process for determining insurance coverage. Not only does this benefit the FDIC directly, but effective performance by the FDIC also benefits the entire banking system by assuring the public of the reliability of federal insurance of deposits. The FDIC asked in this Proposal for suggestions on alternative approaches that might achieve approximately the same benefits for the FDIC at lower costs for banks. Because Dollar sees no reasonable alternative, it supports the general thrust of the Proposal.'' [18]

Two other commenters indicated support because the 2005 ANPR options were viewed as addressing the concept of too-big-to-fail (''TBTF'') and enhancing market discipline. Gary H. Stern, President of the Federal Reserve Bank of Minneapolis made the following five points.[19]

• ''To ensure effective use of society's resources, the FDIC must reform current insurance determination procedures which hinder its ability to carry out the least-cost resolution of a large bank.

• The FDIC's Board of Directors should focus on net benefits when

[18] Comment letter provided by Dollar Bank dated March 13, 2006 in response to the 2005 ANPR, page 1.

[19] Comment letter provided by the Federal Reserve Bank of Minneapolis in response to the 2005 ANPR, pages 1–5.

evaluating the comments received on the 2005 ANPR and choosing which option to implement.[20]

- The features of Option 2 are necessary but may not prove sufficient to correct weaknesses in the insurance determination process.
- The FDIC should give serious consideration to implementing Options 1 and 3.
- The reformed insurance determination regime should apply to all large banks for which the current regime could prevent a least cost resolution; the same insurance determination scheme need not apply to all covered institutions.''

One comment letter focused almost entirely on financial privacy issues. Numerous other commenters indicated financial privacy concerns as well, particularly as they may arise from any testing program implemented as part of the proposal.

The 2005 ANPR noted that ''the FDIC solicits suggestions on alternative means of meeting the objective of conducting a timely insurance determination on Covered insured institutions.'' [21] No alternative suggestions were received.

Since such a large portion of the comment letters raised concerns about costs versus benefits, this topic will be discussed in the next section. This will be followed by a discussion of other issues raised in the comment letters.

Commenters' Views on Costs Versus Benefits

General arguments. Many commenters—including all responses from the trade organizations—argued that any option presented in the 2005 ANPR would impose high or significant costs on Covered Institutions. These costs would come in the form of dollar expenditures and the utilization of scarce technological resources. Some responders indicated this was the wrong time for a new technological initiative since ''under both Basel II and Basel I–A as proposed, banks will be required to develop new and costly information technologies.'' [22]

Many commenters also argued that the likelihood of a Covered-Institution failure was remote. The Financial Institutions Reform, Recovery, and Enforcement Act of 1989 (''FIRREA''), the Federal Deposit Insurance Corporation Improvement Act of 1991 (''FIDICA'') and the Federal Deposit Insurance Reform Act of 2005 (''FDIRA'') were cited as containing provisions reducing the likelihood of large-institution failures. It was noted that the FDIC is undergoing the longest period in its history without a failure. Furthermore, responders pointed out that the most recent failures were of institutions not proposed to be covered by the regulation. It also was argued that the FDIC likely will have ample warning of a large-institution failure, thereby allowing for adequate preparation time. Several commenters recommended applying the 2005 ANPR options only in the event the Covered Institution reaches problem status. This suggestion is discussed in more detail below.

Failure preparation time. The joint trade association letter noted ''failures that have occurred in the last few years were among financial institutions that would not be covered by this 2005 ANPR. Regulators frequently had knowledge of the problems undermining these institutions and had time to prepare for closure. Sudden failures were more likely to have been caused by fraud or other criminal activity. It is highly unlikely that such a series of similar events could cause a failure of covered financial institutions because of their size, capital strength and diversity of lines of business. Constructing, maintaining and periodically testing the programs proposed under this 2005 ANPR solely because of the remote chance of sudden failure resembles an expensive solution in search of a very low probability problem.'' [23]

The 2005 ANPR noted that Covered Institutions are more likely to be closed due to liquidity reasons, thus are prone to fail on any day of the week. Covered Institutions generally would be handled through a bridge bank structure, and to preserve franchise value the failed institution must open the day following failure. The provisional hold functionality included in Options 1 and 2 allows for a next-day opening of the bridge institution. The nightly processing cycle of Covered Institutions does not end until the early morning hours, often extending until 4 a.m. and, in some cases, until 7:30 a.m. Once the nightly processing schedule is complete a failed institution must generate deposit data to be used by the FDIC to make the deposit insurance determination. The 2005 ANPR options recognize that, even under the best of circumstances, it would be impossible for the FDIC to complete the steps necessary for a deposit insurance determination and have the results posted in time for the opening of the bridge bank the business day following failure.[24] Therefore, it is the FDIC's view that one or more of the 2005 ANPR options appear necessary for a successful bridge bank opening, regardless of the advance warning or preparation time allotted.

Differentiation between options. While the majority of commenters opposed the FDIC moving forward, many clearly differentiated between the three options listed in the 2005 ANPR. The Clearing House stated, ''we believe that Option 3 is so extraordinarily burdensome as to be unfeasible and that the burden of Option 1 is clearly excessive. Although Option 2 is less onerous and a possible solution to the FDIC's concerns, we believe that further study and dialogue between the Covered institutions and the FDIC are necessary to refine this option.'' [25] [26]

Option 1 differs from Option 2 in that it would require the institution to supply a unique depositor ID and the insurance category of each account. Several commenters noted that—of the two—the insurance category requirement was significantly more burdensome. Wachovia Corporation noted that it ''currently uses a unique customer identifier for each of [its] general bank customers. However, this identifier may not be available in all instances. An example of this is brokered CDs, in which the insurance is passed through to individuals who are the ultimate customers. We also do not have a unique way to identify insurance categories. Identifying and developing systemic ways to assess categories may be arduous and costly. Again, the development of this logic by multiple banks would be redundant and would

[20] This quote provides further elaboration on this point. ''As already noted, creating the conditions for imposition of least cost resolution of a large bank is the first and most important benefit of the options. This outcome, in turn, should increase market discipline/reduce moral hazard. More market discipline and less moral hazard means a higher standard of living, as resources flow to their best uses. This benefit is difficult to quantify but the limited evidence available suggests that it is potentially large.''

[21] 70 FR 73659, December 13, 2005.

[22] Comment provided by The Financial Services Roundtable dated March 10, 2006 in response to the 2005 ANPR, page 3.

[23] American Bankers Association, America's Community Bankers and The Financial Services Roundtable, page 3.

[24] These steps include: (1) Generating the depositor data file, (2) transmitting the data file to the FDIC, (3) processing the depositor data to produce the deposit insurance determination results and (4) transmitting and posting these results on the institution's deposit systems.

[25] Comment provided by The Clearing House dated March 29, 2006 in response to the 2005 ANPR, page 2.

[26] This quotation is not intended to suggest the trade organization supports Option 2, rather to illustrate the clear differences among the three options. The commenter further noted ''we are concerned that even Option 2 does not create a reasonable [cost/benefit] balance.''

shift responsibility to the bank that the bank should not have to bear.'' [27]

Capital One Financial Corporation noted that ''we estimate the cost of complying with the FDIC's Option 1 as over $220,000. Most of that cost is attributable to the additional requirements of Option 1 as compared with Option 2—in particular, the requirement to identify the insurance ownership category of each deposit account.'' [28]

Estimated costs. No trade organization provided specific cost estimates on the 2005 ANPR options, other than to say the costs would be ''high'' or ''very substantial.'' Four of the 14 large-institution responders—Wachovia Corporation, Capital One Financial Corporation, First Tennessee and Dollar Bank—provided cost estimates for one or more of the options. These estimates generally were characterized as being ''rough'' and frequently contained caveats. The estimates provided are listed in Table 4, which also shows the assessable deposit base of the institution (indicating institution size) and the impact of a 1-basis point annual FDIC assessment (indicating a basis for relative cost comparison).

The paucity of data provided on Option 3 reflects the view among most commenters that it is unfeasible. Wachovia Corporation indicated, for example, that Option 3 was ''wholly unacceptable,'' [29] which appears to be the reason why no cost estimate was provided for this option. First Tennessee was the only responder providing an estimate for Option 3 indicating it was roughly five times higher that that for Option 2.

TABLE 4.—COST ESTIMATES OF 2005 ANPR OPTIONS

Responder	Comment	Estimated implementation cost	Assessable deposits ($ millions)	1-Basis point annual FDIC assessment ($ millions)	Estimated Cost as a % of 1 BP assessment
Wachovia Corporation	Option 2, for demand deposit, time deposit and securities systems only.	''$2 mm or more''	307,000	30.7	7
Capital One Financial Corporation.	Option 1	''over $220,000''	44,000	4.4	5
First Tennessee	Option 2	''exceed $1,000,000''	23,000	2.3	44
First Tennessee	Option 3	''mid seven figures''	23,000	2.3	200
Dollar Bank	Cost of Option 2, ''negligible'' additional cost for Option 1.	''approximately $60,000''	4,500	0.45	13

For Options 1 and 2 the cost estimates provided in the table are fairly modest when matched against other potential deposit insurance costs. Compared to a 1-basis point annual FDIC assessment, the estimated implementation costs of Options 1 or 2 ranged from 5 to 44 percent. The FDIC expects that implementation costs will vary across institutions. The deposit systems at Covered Institutions are different. In particular, some institutions rely primarily on proprietary systems while others use software or servicing provided by an outside vendor.

The 2005 ANPR noted that many Covered Institutions use deposit software supplied by a common vendor or have their deposits serviced by a common servicer. The 2005 ANPR suggested this structure may help mitigate the implementation costs of the options. No deposit software vendor or servicer responded to the 2005 ANPR, nor did any commenter address the potential cost savings associated with the common use of software providers or servicers. The FDIC believes this common usage would mitigate implementation costs.

Too big to fail and market discipline. Several commenters raised the issue of TBTF, effectively expressing the concern that uninsured depositors of a large institution could be made whole in the event of failure, regardless of expected losses in the failed institution. Mr. Stern's letter noted that ''[i]n the face of insufficient technology to segregate deposits or information to determine the insurance status of deposits, therefore, the FDIC would likely prefer to provide depositors with access to deposits even if they might be uninsured. This preference, even if understandable, undercuts least cost resolution and puts pressure on policymakers to invoke the systemic risk exception of [FDICIA]. Invoking the systemic risk exception due to limitations in the resolution process (as opposed to preventing a true systemic crisis) could contribute to substantial resource misallocation in the economy over time.'' [30] Mr. Stern noted that these costs are difficult to quantify, although they could be substantial.

FDIC's Views on the Cost/Benefit Tradeoff

Any option will impose industry costs, but benefits also will accrue. The FDIC must balance these costs and benefits.

Summary of costs. In its 2005 visitations to the four large deposit software vendors/servicers, two of the organizations indicated the cost of the provisional hold functionality was fairly modest. The 2005 ANPR specifically requested comment on the costs of implementing the three options. The limited data summarized above suggests fairly modest implementation costs for an Option 2 approach and, for some institutions, Option 1 as well. The consensus of comments was that Option 3 would be prohibitively expensive. While no commenters mentioned the potential cost savings that may arise from the use of common software vendors or servicers, they could be significant. The available data on costs currently is limited, although more information should result from this request for comments as well as other research conducted by the FDIC.

Many responders noted the low likelihood of a Covered-Institution

[27] Comment provided by Wachovia Corporation dated March 10, 2006 in response to the 2005 ANPR, page 3.

[28] Comment provided by Capital One Financial Corporation dated March 13, 2006 in response to the 2005 ANPR, page 2.

[29] Wachovia Corporation, page 3.

[30] Federal Reserve Bank of Minneapolis, pages 2–3.

failure. Historical evidence indicates this to be the case. The FDIC also agrees that the reforms implemented in FIRREA, FDICIA and FDIRA serve to reduce the probability of a Covered-institution failure. However, even if the likelihood of a failures among Covered Institutions is perceived to be low, it is not zero. The FDIC should have in place a credible plan for resolving the failure of an institution of any size with the least possible costs. The ability to determine the insurance status of depositors in a failed institution in a timely manner is a critical element for ensuring a least-costly resolution.

Meeting the FDIC's legal mandates. FDICIA was one of the most important pieces of legislation affecting the FDIC's failure resolution process. Its least-cost requirement effectively requires uninsured depositors to be exposed to losses. Also, FDICIA's legislative history and the nature of the systemic risk exception provide a clear message that uninsured depositors of large institutions are to be treated on par with those of any size. Meeting these mandates is an important benefit of the rules being proposed.

Enhancement of market discipline. The FDIC's legal mandates have direct implications for TBTF and market discipline. If financial markets perceive uninsured depositors in large institutions will be made whole in the event of failure, deposits will be directed toward these larger depository institutions. The result would be the misallocation of economic resources. Many market observers believe there are substantial benefits of improved market discipline that accrue even without serious industry distress or bank failures. The FDIC agrees with Mr. Stern's assessment that this resource misallocation could be significant.

Effective market discipline also limits the size of troubled institutions and results in a more rapid course toward failure. Both serve to mitigate overall resolution losses. Lower resolution losses benefit insured institutions through lower insurance assessments.

Equity in the treatment of depositors of insured institutions. In the absence of one or more of the options outlined in the 2005 ANPR, the FDIC is concerned that the resolution of a Covered Institution could be accomplished only through a significant departure from its normal claims procedures. This departure could involve leaving the bank closed until an insurance determination is made or the use of shortcuts to speed the opening of the bridge institution. The use of shortcuts or other mechanisms to facilitate depositor access to funds will imply disparate treatment among depositors within the failed institution and certainly different treatment relative to the closure of a non-Covered Institution. The FDIC places a high priority on the consistent implementation of its claims policies and procedures regardless of the size or complexity of the institution.

Preservation of franchise value in the event of failure. The sale of the franchise of a failed institution can provide significant value to mitigate failure costs and is a necessary ingredient to a least-cost resolution. Superior Bank, FSB, the largest failure over the past 10 years, generated a franchise premium of $52 million, or 17 percent of current estimated FDIC losses in the failure. An ineffective claims process—especially one deviating significantly from the FDIC's normal policies and procedures—risks reducing or destroying an important asset of the receivership. Preservation of franchise value in the event of failure of a Covered Institution will be an important benefit of the proposed options.

Suggested course of action. The strong industry opposition and high costs of Option 3 make it unlikely to be the most cost-effective option. In addition, the less costly options appear to meet the primary objective of the FDIC. Although the 2005 ANPR generated only limited data on the costs of Options 1 and 2, these costs are almost certainly low enough to merit moving forward—particularly given the substantial benefit to the FDIC in being able to meet its statutory mandate for least-cost resolutions and the uniform application of insurance limits, plus additional benefits associated with enhanced market discipline. Implementation costs may vary among Covered Institutions depending on conditions such as the number of deposit systems, the age of these systems and their architecture, and whether deposit operations are processed in-house or through a servicer. To some degree, the factors affecting costs also indicate a facet of operational risk which may influence failure potential.

Implementation of Options Upon Reaching Problem Status

Several commenters suggested delaying the implementation of any options until a Covered Institution reaches ''problem bank status.'' [31] For supervisory purposes problem bank status refers to any insured depository institution with a composite CAMELS rating of ''4'' or ''5''. None of the Covered Institutions currently are designated as problem institutions. The adoption of this exception likely would imply that no Covered Institutions would have to immediately comply with the new FDIC requirements.

Several commenters also provided insights into the potential time needed to implement the proposed rules. The Clearing House, for example, noted that ''material information system changes take significant time. Our member banks have discussed the ANPR with their technical staffs and have determined that any of the requested changes could be made, but only over a significant period of time. Without more specific direction, they cannot put a specific timeframe on the project, but to make any substantial changes over multiple systems, and then fully test them, is likely to take more than a year.'' [32] Additional time would be needed for the FDIC to test the system changes.

The FDIC is concerned that a Covered Institution could fail prior to reaching problem status (with a CAMELS rating of ''3'', for example), or relatively shortly after attaining problem status. If the one-year implementation time estimate is generally accurate, the FDIC risks not meeting its objectives should a Covered Institution fail more quickly than one year after being designated a problem institution. Further, a period of financial or operational stress is not the opportune time to make the proposed system enhancements.

Cost Reimbursement

Several responders to the 2005 ANPR suggested that the FDIC cover implementation costs, either through a direct payment or an assessment rebate. As shown in Table 4, the estimated costs of implementing Options 1 or 2 are fairly modest, ranging from 5 to 44 percent of a 1-basis point annual FDIC assessment. Implementation costs may be viewed as part of the overall cost of deposit insurance; therefore, not subject to reimbursement.

Extending Program to All Insured Institutions

Two commenters proposed extending the options to all insured institutions, and one commenter suggested the FDIC may apply the options to large institutions now but include small institutions at some future point. The 2005 ANPR specifically limited the scope of the options to the 145 insured institutions with at least 250,000 deposit accounts and more than $2 billion in domestic deposits. The 2005 ANPR noted that the FDIC was

[31] See, for example, the American Bankers Association, America's Community Bankers and The Financial Services Roundtable letter, page 3.

[32] The Clearing House, page 3.

considering expanding the definition of a Covered Institution but only in a way that would include a handful of other institutions (for example, those with at least $20 billion in total assets, regardless of the number of accounts). The 2005 ANPR never suggested or mentioned in any way the possibility of extending coverage to all insured institutions.

As noted in the 2005 ANPR, the ''FDIC is seeking to minimize [implementation] costs while at the same time ensuring that it can effectively carry out its mandates to make insured funds available quickly to depositors and provide a least-cost resolution for Covered institutions.'' [33] The FDIC's deposit insurance determination modernization initiative is directed at improving the process at the very largest institutions. The FDIC has never considered extending the options beyond the largest, most complex institutions. There simply is no business reason for doing so.

Financial Privacy

One comment letter focused primarily on financial privacy, but other letters mentioned the issue as well, especially in the context of any testing program. As noted in the 2005 ANPR, ''[a]s part of its normal practice, the FDIC obtains depositor data only at the time an insured institution is in danger of failing. These data are received in the weeks or months prior to failure, and are obtained for the sole purpose of determining the insurance status of individual depositors and estimating the total amount of insured funds in the institution. The receipt of such depositor data is necessary for the FDIC to carry out its insurance function. The options provided in this [2005] ANPR do not alter the FDIC policy regarding the receipt of depositor information in preparation for the resolution of a failing insured institution. The FDIC is aware of the potential privacy issues surrounding the holding of depositor information and has in place strict safeguards to protect these data.'' [34] The 2005 ANPR also states ''it is possible to conduct an effective testing process while on-site, without the need for sensitive depositor data to leave the institution's premises.'' [35]

The 2005 ANPR options would not change the treatment of depositor data in the event an institution is in danger of failing, nor have such changes been proposed. The FDIC still believes an effective testing program can be structured whereby sensitive depositor data never leaves the institution's premises. These testing safeguards eliminate privacy concerns.

Appendix C—Data Elements Included in the Standard Data Set

The Standard Data Request contains data structures which will be used by the FDIC to determine insurance categorization. This data structure may be divided into multiple Record Types/Formats. It is the FDIC's intent to work with the industry to define a standard data structure. If data or information are not maintained or do not apply, a null value in the appropriate field should be indicated.

XML may be the most beneficial format. XML has become a widely adopted standard for data interchange by enabling a common messaging format for the exchange of information between systems. XML will enable all the information listed below to be consolidated into one file and presented in plain text with hierarchical relationships providing a single source/file containing the required information.

Following is a list of the data fields that are to be included in the proposed data structure along with explanations of the data being requested. The fields are listed in the order they should appear in the file.

Representative Deposit Data Elements

The Deposit data elements provide information specific to deposit account balances and account data. The sequencing of these elements, their physical data structures and the mode or method of data transmission will be developed in cooperation with the Covered Institutions.

Note: Fields 13–26 relate to the Account Name and Address information. Some systems provide for separate fields for Account Title/Name, Address, City, State, Zip, and Country, all of which are parsed out. Others systems may simply provide multiple lines for Name, Address, City, State, Zip, with no distinction. Please populate fields that best fit the system's data, either fields 13–20 or fields 21–26.

	Field name	FDIC field description	Questions/comments for the industry
1	DP_Acct_Numb	Account Number: The unique number assigned by the institution to this account.	Is there a case where this number is not unique within your institution? Are account numbers unique across different deposit systems? If they are not unique, will the combination of branch and account number provide a unique number?
2	DP_Sub_Acct_Numb	Sub-Account Number: Account number field that further identifies the account. May be used to identify separate deposits tied to this account where there are different processing parameters, i.e. interest rates, maturity dates, but all owners are the same (like CD certificate numbers).	
3	DP_Tax_ID	Tax ID: Provide the tax identification number(s) maintained on the account. For consumer accounts, typically, this would be the primary account holder's social security number (SSN). For business accounts it would be the federal tax identification number (TIN).	
4	DP_Tax_Code	Tax ID Code: This field should identify the type of the tax identification number. Generally deposit systems have flags or indicators set to indicate whether the number is an SSN or TIN. • S = Social Security Number. • T = Federal Tax Identification Number. • O = Other.	Is the data field available in your deposit system?

[33] 70 FR 73654, December 13, 2005.

[34] 70 FR 73653, December 13, 2005.

[35] 70 FR 73658, December 13, 2005.

	Field name	FDIC field description	Questions/comments for the industry
5	DP_Branch	Branch Number: This field should identify the branch or office associated with the account. Usually referred to as branch number but may represent a specialty department or division or office.	
6	DP_Cost_Center	Cost Center or G\L Code: Identifier used for organization reporting or ownership of the account. Ties to general ledger accounts. If cost center is not carried in the deposit record, leave blank.	
7	DP_Prod_Type	Product Type: This field is used to identify the product type from a customer perspective. Your financial institution may identify this field by another name, but will indicate account product: • CON = Personal or consumer accounts; this can be a SGL, JNT, REV, IRR, IRA. • BUS = Business. • NPR = Non-profit accounts. • GOV = Accounts held by government entities (city, state, political subdivisions). • FIN = Accounts held by other financial institutions. • INT = Internal accounts (bank control accounts) or bank owned accounts. • BRK= Brokered accounts.	Can your deposit accounts be categorized into these product types? How accurate would the designation be? What data elements in your deposit system would enable you to determine the product type? Is this available for all deposit products?
8	DP_Owner_Ind	Customer Owner Indicator: ..... This field is used to identify the type of ownership at the account level. Your financial institution may call these indicators by another name, but the field should indicate: • S = Single. • J = Joint Account. • P = Partnership account. • C = Corporation. • B = Brokered Deposits. • T = Trust. • O = Other.	How accurately can you determine the ownership status of an account? Are these data readily available on your deposit system(s)?
9	DP_Prod_Cat	Product Category: ..... This is a broad classification of products and accounts. It is sometimes referred to as ''application type'' or ''system type''. Examples of values in the field are: • DDA = Non-Interest Bearing Checking accounts. • NOW = Interest Bearing Checking accounts. • MMA = Money Market Accounts. • SAV = Savings accounts and Money Market Savings accounts. This includes any interest bearing accounts with regulated withdrawal requirements. • CDS = Time Deposit accounts and Certificate of Deposit accounts. Include any accounts with specified maturity dates that may or may not be renewable. • REP = Repurchase agreements—Include any accounts supported by an agreement to repurchase the deposit at a specified date and interest rate, and is secured by designated securities owned by the institution. • IRA = Individual Retirement Account (IRA). • RIRA = Roth IRA. • KEO = Keogh.	Can your deposit accounts be categorized into these product categories? How accurate would the categorization be? What data elements in your deposit system would enable you to determine the product category? Is this available for all deposit products?
10	DP_Stat_Code	Status Code: Include only the following status or condition of the account. Field values are: • O = Open. • C = Closed. • D = Dormant. • I = Inactive.	
11	DP_Short_Name	Short Name or SORT Name: Generally the field used to create an alpha list of accounts or to sort names. If a similar field does not exist, create a ''Short Name'' by concatenating data using the account title field. Personal accounts should have all letters or last name if possible or first 5 letters of last name and first 2 letters of first name for all names on account. Business accounts should have business name with leading words such as ''the'' dropped so the name can be properly placed in an alphabetized account listing.	
12	DP_Acct_Title_1	Account Title Line 1: Two lines (Fields 13 & 14) are provided to enter account styling or titling of the account. These data will be used to identify the owners of the account.	Please indicate the best way to obtain account title, name and address based on the characteristics of your deposit system(s).
13	DP_Acct_Title_2	Account Title Line 2: Additional Account Title line.	
14	DP_Address_Line_1	Address Line 1: Two lines (Fields 15 & 16) are provided to enter the street, PO Box, suite number, etc * * * of the address.	
15	DP_Address_Line_2	Address Line 2: Additional address line.	

	Field name	FDIC field description	Questions/comments for the industry
16	DP_City	City: Enter the city associated with the mailing address.	
17	DP_State	State: Enter the state abbreviation associated with the mailing address.	
18	DP_ZIP	ZIP: This field allows for the ZIP+ 4 Code associated with the mailing address. If "4 Code" is not available provide 5-digit ZIP Code and leave "4 Code" blank.	
19	DP_Country	Country: This field should identify the country associated with the mailing address. Provide the name of the country or the standard country code.	
20	DP_NA_Line_1	Name or Address Line 1: Six lines (Fields 21—26) are provided to enter the name and/or the account mailing address if your system does not distinguish particular address lines.	
21	DP_NA_Line_2	Name & Address Line 2: Additional name and/or address line.	
22	DP_NA_Line_3	Name & Address Line 3: Additional address line.	
23	DP_NA_Line_4	Name & Address Line 4: Additional address line.	
24	DP_NA_Line_5	Name & Address Line 5: Additional address line.	
25	DP_NA_Line_6	Name & Address Line 6: Additional address line.	
26	DP_Cur_Bal	Current Balance: This amount represents the current balance in the account at the end of business on the effective date of this file. This balance should not be reduced by float or holds. For CDs and time deposits, it should reflect the principal balance plus any interest paid and available for withdrawal that is not already included in the principal (do not include accrued interest not paid). The total of all current balances in this file should reconcile to the total deposit trial balance totals or other summary reconciliation of deposits performed by the financial institution.	
27	DP_Int_Rate	Interest Rate: The current interest rate in effect for interest bearing accounts.	
28	DP_Bas_Days	Basis Days: Indicates the basis on which interest is to be paid. Valid values are: • 1 = 30/360. • 2 = 30/365. • 3 = 365/365 (actual/actual).	
29	DP_Int_Type	Interest Type: Indicates the type of interest to be paid. Valid values are: • S = Simple. • D = Daily Compounding. • C = Continuous Compounding. • O = Other.	
30	DP_Int_Factor	Interest Rate Daily Factor: This field should reflect the daily interest rate factor for generating interest.	Are these data available for interest-bearing accounts?
31	DP_Acc_Int	Accrued Interest: This field should reflect the amount of interest that has been earned but not yet paid to the account as of the date of the file.	
32	DP_Lst_Int_Pd	Date Last Interest Paid: This field should indicate the date thru which interest was last paid to the account. Must be entered in MMDDYYYY format.	
33	DP_Lst_Deposit	Date Last Deposit: This date should reflect the last deposit transaction posted to the account. For example, a deposit that included checks and or cash. Must be entered in MMDDYYYY format.	
34	DP_Open_DT	Account Open Date: This date should reflect the date the account was opened. If the account had previously been closed and re-opened, this should reflect the most recent re-opened date. Must be entered in MMDDYYYY format.	
35	DP_Nxt_Mat	Date of Next Maturity: For CD and time deposit accounts, this is the next date the account is to mature. For non-renewing CDs that have matured and are waiting to be redeemed this date may be in the past. Must be entered in MMDDYYYY format.	

Representative Hold Data Elements

The Hold data elements provide information related to any holds for collateral placed on an account. If an account has more than one collateral hold, additional Hold elements may be provided to help the Covered Institutions or FDIC to process holds more efficiently.

	Field name	FDIC field description	Questions/comments for the industry
1	HD_Acct_Numb	Account Number The account number associated with the hold. Should be the same as the account number in Deposit Record field #1.	Do we need the branch number to make this unique across all deposit accounts?
2	HD_Sub_Acct_Numb_ID	Sub-Account Number: Account number field that further identifies the account.	

	Field name	FDIC field description	Questions/comments for the industry
3	HD_Hold_Amt	Hold Amount: Dollar amount of the hold.	
4	HD_Hold_Reason	Hold Reason: Reason for the hold. Valid values are: • LN = Loan collateral hold. • OT = Other—any hold not a collateral hold.	
5	HD_Hold_Desc	Hold Description: Description of the hold available on the system.	
6	HD_Hold_Days	Hold Days: The number of days the hold was/is intended. May be used instead of an expiration date.	Please specify a preference between field #6 and field #8.
7	HD_Hold_Start_Dt	Hold Start Date: The date the hold was initiated. Must be entered in MMDDYYYY format.	
8	HD_Hold_Exp_Dt	Hold Expiration Date: The date the hold is to expire. Must be entered in MMDDYYYY format. May be used instead of number of hold days.	

Customer Record Held in Central Information File (''CIF'') or Central Information System (''CIS'')

The Customer Record provides information related to each customer of the financial institution. Customers may have more than one deposit account, or may be partial owners of more than one deposit account. Each of the customer's accounts are associated with a customer record. If there are multiple owners of an account, multiple customer records (CIF/CIS) will be associated to the deposit account and will be associated in the deposit record (pointed to or linked by a linking file). If a linking file is required to link customer records to deposit records, please provide the program along with instructions on how to link.

	Field name	FDIC field description	Questions/comments for the industry
1	CS_Cust_Numb	Customer Number: The number assigned to the customer in the Customer Information System.	
2	DP_Acct_Numb	Account Number: The unique account number assigned by the institution.	
3	CS_Tax_ID	Customer Tax ID Number: Provide the Tax ID number on record for the customer.	Do you store customer tax ID number in your customer records? If so, is there a possibility that the customer and account level tax ID numbers are different?
4	CS_Tax _Code	Customer Tax ID Code: This field should identify the type of the Tax ID number of the customer. Valid values are: • S = Social Security Number. • T = Federal Tax Identification Number. • O = Other.	
5	CS_Rel_Code	Relationship Code: This code indicates how the customer is related to the account. Valid values are: • P = Primary Owner. • S = Secondary Owner. • B = Beneficiary. • T = Trustee. • O = Other. • U = Unknown.	The CIF account is for one person or entity. That person may have more than one deposit account that is tied to the CIF number. The relationship code is given for the person or entity relating to each account the CIF is tied to. Are these data available within your customer records?
6	CS_Bene_Code	Beneficiary Type Code: If the customer is considered a beneficiary, enter the type of account associated with this customer. This includes beneficiaries on retirement accounts, trust accounts, minor accounts, and payable-on-death accounts. Valid values are: • I = IRA. • T = Trust—irrevocable. • R = Trust—revocable. • M = Uniform Gift to Minor. • P = Payable on death. • O = Other.	Are these data available within your customer records?
7	CS_Name	Customer Name: The name of the customer. Provide in the Mapping document the typical format the bank practices for business customers and personal/individual customers, *i.e.*—Last Name first, First Name last.	
8	CS_Last_Name	Customer Last Name: The last name of the individual/ personal customer.	
9	CS_First_Name	Customer First Name: The first name of the individual/ personal customer.	
10	CS_Middle_Name	Customer Middle Name: The middle name of the individual/ personal customer.	

	Field name	FDIC field description	Questions/comments for the industry
11	CS_Suffix	Customer Suffix: The suffix of the individual/ personal customer—*i.e.* Jr., Sr., III, etc.	
12	CS_Comp_Name	Customer Company Name: The company name of the business customer.	How are business customers reflected in your customer records? Are there multiple name/address fields?
13	CS_Address_1	Address Line 1: Two lines (Fields 13 & 14) are provided to enter the street, PO Box, suite number, etc. of the address.	
14	CS_Address_2	Address Line 2: Additional address field.	
15	CS_City	City: Enter the city associated with the mailing address of the customer.	
16	CS_State	State: Enter the state abbreviation associated with the mailing address of the customer.	
17	CS_ZIP	ZIP: This field allows for the ZIP+ 4 Code associated with the mailing address of the customer.	
18	CS_Country	Country: This field should identify the country associated with the mailing address. Provide the name of the country or the standard country code.	
19	CS_Birth_Dt	Customer Birth Date: The birth date on record for the customer. Must be entered in MMDDYYYY format.	
20	CS_Telephone	Customer Telephone Number: The telephone number on record for the customer.	
21	CS_Email	Customer Email Address: The e-mail address on record for the customer.	

* * * * *

By order of the Board of Directors.

Dated at Washington, DC, this 5th day of December, 2006.

Federal Deposit Insurance Corporation.

Robert E. Feldman,

Executive Secretary.

[FR Doc. E6–21143 Filed 12–12–06; 8:45 am]

BILLING CODE 6714–01–P

DEPARTMENT OF TRANSPORTATION

Federal Aviation Administration

14 CFR Part 39

[Docket No. FAA–2006–23871; Directorate Identifier 2006–NE–01–AD]

RIN 2120–AA64

Airworthiness Directives; General Electric Company (GE) CF6–80C2 Turbofan Engines

AGENCY: Federal Aviation Administration (FAA), Department of Transportation (DOT).

ACTION: Notice of proposed rulemaking (NPRM).

SUMMARY: The FAA proposes to adopt a new airworthiness directive (AD) for GE CF6–80C2 series turbofan engines. This proposed AD would require replacing certain installed part number (P/N) and serial number (SN) cast titanium weld-repaired forward engine mount platforms and cast titanium forward mount yokes, with a forged titanium or a non-welded cast titanium part. This proposed AD results from the discovery of cracks, in a weld-repaired area on a forward engine mount platform and a forward engine mount yoke, found during a fluorescent penetrant inspection (FPI). These parts were weld-repaired during manufacture. We are proposing this AD to prevent cracks in the forward engine mount platform and forward engine mount yoke that could result in possible separation of the engine from the airplane.

DATES: We must receive any comments on this proposed AD by January 12, 2007.

ADDRESSES: Use one of the following addresses to comment on this proposed AD.

- *DOT Docket Web site:* Go to *http://dms.dot.gov* and follow the instructions for sending your comments electronically.
- *Government-wide rulemaking Web site:* Go to *http://www.regulations.gov* and follow the instructions for sending your comments electronically.
- *Mail:* Docket Management Facility; U.S. Department of Transportation, 400 Seventh Street, SW., Nassif Building, Room PL–401, Washington, DC 20590–0001.
- *Fax:* (202) 493–2251.
- *Hand Delivery:* Room PL–401 on the plaza level of the Nassif Building, 400 Seventh Street, SW., Washington, DC, between 9 a.m. and 5 p.m., Monday through Friday, except Federal holidays.

You may examine the comments on this proposed AD in the AD docket on the Internet at *http://dms.dot.gov*.

FOR FURTHER INFORMATION CONTACT: James Lawrence, Aerospace Engineer, Engine Certification Office, FAA, Engine and Propeller Directorate, 12 New England Executive Park, Burlington, MA 01803; telephone (781) 238–7176; fax (781) 238–7199.

SUPPLEMENTARY INFORMATION:

Comments Invited

We invite you to send us any written relevant data, views, or arguments regarding this proposal. Send your comments to an address listed under **ADDRESSES.** Include ''Docket No. FAA–2006–23871; Directorate Identifier 2006–NE–01–AD'' in the subject line of your comments. We specifically invite comments on the overall regulatory, economic, environmental, and energy aspects of the proposed AD. We will consider all comments received by the closing date and may amend the proposed AD in light of those comments.

We will post all comments we receive, without change, to *http://dms.dot.gov*, including any personal information you provide. We will also post a report summarizing each substantive verbal contact with FAA personnel concerning this proposed AD. Using the search function of the DOT Web site, anyone can find and read the comments in any of our dockets, including the name of the individual who sent the comment (or signed the comment on behalf of an association, business, labor union, etc.). You may review the DOT's complete Privacy Act Statement in the **Federal Register** published on April 11, 2000 (65 FR 19477–78) or you may visit *http://dms.dot.gov*.

Examining the AD Docket

You may examine the docket that contains the proposal, any comments received, and any final disposition in person at the DOT Docket Office between 9 a.m. and 5 p.m., Monday through Friday, except Federal holidays. The Docket Office (telephone (800) 647–5227) is located on the plaza level of the Department of Transportation Nassif Building at the street address stated in **ADDRESSES.** Comments will be available in the AD docket shortly after the Docket Management Facility receives them.

Discussion

During an FPI inspection of the forward engine mount platform and forward engine mount yoke, an air carrier found crack indications in the forward engine mount platform and yoke, and reported the findings to GE. An audit of GE's manufacturing records revealed 25 cast titanium forward engine mount platforms, including the one found cracked, and 59 cast titanium forward engine mount yokes, had been weld-repaired at manufacture in either the pylon thrust pin hole or in the pylon attach bolt-hole region. Therefore, 25 cast titanium forward engine mount platforms and 59 cast titanium forward engine mount yokes would be affected by this proposed AD. Although the weld repairs were an approved GE practice at the time, it has since been determined that the welding results in cracking in critical areas of the forward engine mount platforms and yokes. This condition, if not corrected, could result in possible separation of the engine from the airplane.

FAA's Determination and Requirements of the Proposed AD

We have evaluated all pertinent information and identified an unsafe condition that is likely to exist or develop on other products of this same type design. We are proposing this AD, which would require replacing certain installed P/N and SN cast titanium weld-repaired forward engine mount platforms and cast titanium forward mount yokes with a forged titanium or a non-welded cast titanium part.

Costs of Compliance

There are 25 engines in service that contain the substandard forward engine mount platforms and 59 engines in service that contain the substandard forward engine mount yokes. We estimate that this proposed AD would affect 84 CF6–80C2 engines installed on airplanes of U.S. registry. We estimate that it would take 34 work-hours per engine to replace the weld-repaired cast titanium forward engine mount platforms and the weld-repaired cast titanium forward engine mount yokes. The average labor rate is $80 per work-hour. Required forward engine mount parts would cost about $12,168 per engine. Required forward engine mount yoke parts would cost about $39,560 per engine. Based on these figures, we estimate the total cost of the proposed AD to U.S. operators to be $2,866,720.

Authority for This Rulemaking

Title 49 of the United States Code specifies the FAA's authority to issue rules on aviation safety. Subtitle I, Section 106, describes the authority of the FAA Administrator. Subtitle VII, Aviation Programs, describes in more detail the scope of the Agency's authority.

We are issuing this rulemaking under the authority described in Subtitle VII, Part A, Subpart III, Section 44701, ''General requirements.'' Under that section, Congress charges the FAA with promoting safe flight of civil aircraft in air commerce by prescribing regulations for practices, methods, and procedures the Administrator finds necessary for safety in air commerce. This regulation is within the scope of that authority because it addresses an unsafe condition that is likely to exist or develop on products identified in this rulemaking action.

Regulatory Findings

We have determined that this proposed AD would not have federalism implications under Executive Order 13132. This proposed AD would not have a substantial direct effect on the States, on the relationship between the national Government and the States, or on the distribution of power and responsibilities among the various levels of government.

For the reasons discussed above, I certify that the proposed regulation:

1. Is not a ''significant regulatory action'' under Executive Order 12866;

2. Is not a ''significant rule'' under the DOT Regulatory Policies and Procedures (44 FR 11034, February 26, 1979); and

3. Would not have a significant economic impact, positive or negative, on a substantial number of small entities under the criteria of the Regulatory Flexibility Act.

We prepared a regulatory evaluation of the estimated costs to comply with this proposed AD. See the **ADDRESSES** section for a location to examine the regulatory evaluation.

List of Subjects in 14 CFR Part 39

Air transportation, Aircraft, Aviation safety, Safety.

The Proposed Amendment

Under the authority delegated to me by the Administrator, the Federal Aviation Administration proposes to amend 14 CFR part 39 as follows:

PART 39—AIRWORTHINESS DIRECTIVES

1. The authority citation for part 39 continues to read as follows:

Authority: 49 U.S.C. 106(g), 40113, 44701.

§ 39.13 [Amended]

2. The FAA amends § 39.13 by adding the following new airworthiness directive:

General Electric Company: Docket No. FAA–2006–23871; Directorate Identifier 2006–NE–01–AD.

Comments Due Date

(a) The Federal Aviation Administration (FAA) must receive comments on this airworthiness directive (AD) action by January 12, 2007.

Affected ADs

(b) None.

Applicability

(c) This AD applies to the following General Electric Company (GE) turbofan engines with cast titanium assembly engine mount platforms part numbers (P/Ns) 1292M13G06, 1301M28G08, 1459M70G07, and 1846M24G04 and cast titanium assembly engine mount yokes P/Ns 9383M43G14 and 9383M43G16 installed.

CF6–80C2A1	CF6–80C2A8	CF6–80C2B4	CF6–80C2B4F
CF6–80C2A2	CF6–80C2A5F	CF6–80C2B6	CF6–80C2B5F
CF6–80C2A3	CF6–80C2B1	CF6–80C2B1F	CF6–80C2B6F
CF6–80C2A5	CF6–80C2B2	CF6–80C2B2F	CF6–80C2B6FA

These engines are installed on, but not limited to, Boeing 747, Boeing 767, and Airbus A300–600 airplanes.

Unsafe Condition

(d) This AD results from the discovery of cracks in a forward engine mount platform and a forward engine mount yoke found during fluorescent penetrant inspection (FPI). We are issuing this AD to prevent cracks in the forward engine mount platform and forward engine mount yoke that could result in possible separation of the engine from the airplane.

Compliance

(e) You are responsible for having the actions required by this AD performed within the compliance times specified unless the actions have already been done.

P/N and SN Weld-Repaired Forward Engine Mount Platforms and Forward Engine Mount Yokes Requiring Replacement

(f) Table 1 of this AD lists the P/Ns and serial numbers (SNs) of the weld-repaired forward engine mount platforms that have a weld repair in a non-redundant area of the mount and must be replaced.

TABLE 1.—WELD-REPAIRED FORWARD ENGINE MOUNT PLATFORMS REQUIRING REPLACEMENT THAT HAVE A WELD REPAIR IN A NON-REDUNDANT AREA OF THE MOUNT.

P/Ns	SNs
1292M13G06 or 1846M24G04	WACHH228
	WACHH254
	WACHH285
	WACHH290
	WACHH292
	WACHH295
	WACHH299
	WACHH384
	WACHH427
	WACHH440
	WACHH604
1301M28G08	WACAR292
	WACAR354

(g) Table 2 of this AD lists the P/Ns and SNs of the weld-repaired forward engine mount platforms that have a weld repair in a redundant area of the mount. Because it is impossible to detect whether the mount is operating on the redundant feature, each of these mounts must be replaced. The compliance time for mounts in this category can be longer than for the mounts listed in Table 1 of this AD.

TABLE 2.—WELD-REPAIRED FORWARD ENGINE MOUNT PLATFORMS REQUIRING REPLACEMENT THAT HAVE A WELD REPAIR IN A REDUNDANT AREA OF THE MOUNT

P/Ns	SNs
1292M13G06 or 1846M24G04	WACHH173
	WACHH189
	WACHH274

TABLE 2.—WELD-REPAIRED FORWARD ENGINE MOUNT PLATFORMS REQUIRING REPLACEMENT THAT HAVE A WELD REPAIR IN A REDUNDANT AREA OF THE MOUNT—Continued

P/Ns	SNs
	WACHH278
	WACHH314
	WACHH325
	WACHH486
1301M28G08	WACAR294
	WACAR304
	WACAR353
	WACAR372
1459M70G07	MTXT1282

(h) Table 3 of this AD lists the P/Ns and SNs of the weld-repaired forward engine mount yokes that have a weld repair in a redundant area of the yoke. Because it is impossible to detect whether the mount yoke is operating on the redundant feature, each of these mount yokes must be replaced. The compliance time for mounts in this category can be longer than for the mounts listed in Table 1 of this AD.

TABLE 3.—WELD-REPAIRED FORWARD ENGINE MOUNT YOKES REQUIRING REPLACEMENT THAT HAVE A WELD REPAIR IN A NON-REDUNDANT AREA OF THE YOKE

P/Ns	SNs
9383M43G14	WACV0388
	WACV0394
	WACV0405
	WACV0406
	WACV0477
	WACV0498
	WACV0529
	WACV0556
	WACV0579
	WACV0581
	WACV0582
	WACV0600
	WACV0605
	WACV0617
	WACV0625
	WACV0627
	WACV0633
	WACV0645
	WACV0683
	WACV0703
	WACV0733
	WACV0737
	WACV0759
	WACV0775
	WACV0791
	WACV0799
	WACV0875
	WACV0883
	WACV0885
	WACV0909
	WACV1097
	WACV1615
	WACV1713
	WACV1753
	WACV1797
	WACV1867
	WACV1987

TABLE 3.—WELD-REPAIRED FORWARD ENGINE MOUNT YOKES REQUIRING REPLACEMENT THAT HAVE A WELD REPAIR IN A NON-REDUNDANT AREA OF THE YOKE—Continued

P/Ns	SNs
	WACV2131
	WACV2159
	WACV2185
	WACV2343
	WACV2511
	WACV2695
	WACV2707
	WACV2881
	WACV2899
9383M43G16	WACV0511
	WACV0515
	WACV0518
	WACV0540
	WACV0542
	WACV0571
	WACV0689
	WACV0721
	WACV0727
	WACV0730
	WACV0786
	WACV0816
	WACV0954

(i) GE advises that forward engine mount platform, P/Ns 1292M13G06 and 1846M24G04, are the same, except that P/N 1846M24G04 incorporates a previously approved field rework. This rework allows the thrust pin hole in the forward engine mount platform to be bored out to accept installation of an oversized thrust pin. GE cannot identify which SN goes with which P/N, but all SNs are affected.

Welded Cast Titanium Forward Engine Mount Platform and Forward Engine Mount Yoke Removal

(j) If the P/N and SN of the forward engine mount platform listed in Table 1 and Table 2 and the forward engine mount yoke listed in Table 3 of this AD are not installed on the engine, no further action is necessary.

(k) If the P/N and SN of the forward engine mount platform listed in Table 1 of this AD is installed on the engine:

(1) Remove the forward engine mount platform from the engine within 500 cycles or 6 months, after the effective date of this AD, whichever occurs first.

(2) Information for removal of the forward engine mount platform from the engine can be found in the CF6–80C2 Engine Manual, 72–00–01, Disassembly.

(l) If the P/N and SN of the forward engine mount platform listed in Table 2 of this AD is installed on the engine:

(1) Remove the forward engine mount platform at the next shop visit, or within 4,800 cycles after the effective date of this AD, whichever occurs first.

(2) Information for removal of the forward engine mount yoke can be found in the CF6–80C2 Engine Manual, 72–00–01, Disassembly.

(m) If the P/N and SN of the forward engine mount yoke listed in Table 3 of this AD is installed on the engine:

(1) Remove the forward engine mount yoke at the next shop visit, or within 4,800 cycles after the effective date of this AD, whichever occurs first.

(2) Information for removal of the forward engine mount yoke can be found in the CF6–80C2 Engine Manual, 72–00–01, Disassembly.

(n) Replace the affected forward engine mount platform and or the affected forward engine mount yoke with a non-weld-repaired cast titanium forward engine mount platform and or the forward engine mount yoke or a forged titanium forward engine mount platform or a forged titanium forward engine mount yoke.

(o) Information for installing the forward engine mount platform and forward engine mount yoke can be found in the CF6–80C2 Engine Manual, 72–00–01, Assembly.

(p) Location of the forward engine mount platform and forward engine mount yoke and SN are illustrated in the following Figure 1.

BILLING CODE 4910–13–P

ENGINE - Forward Mount Assembly (71-00-00) - Cast Assembly Engine Mount Platform and Cast Assembly Engine Mount Yoke Replacement

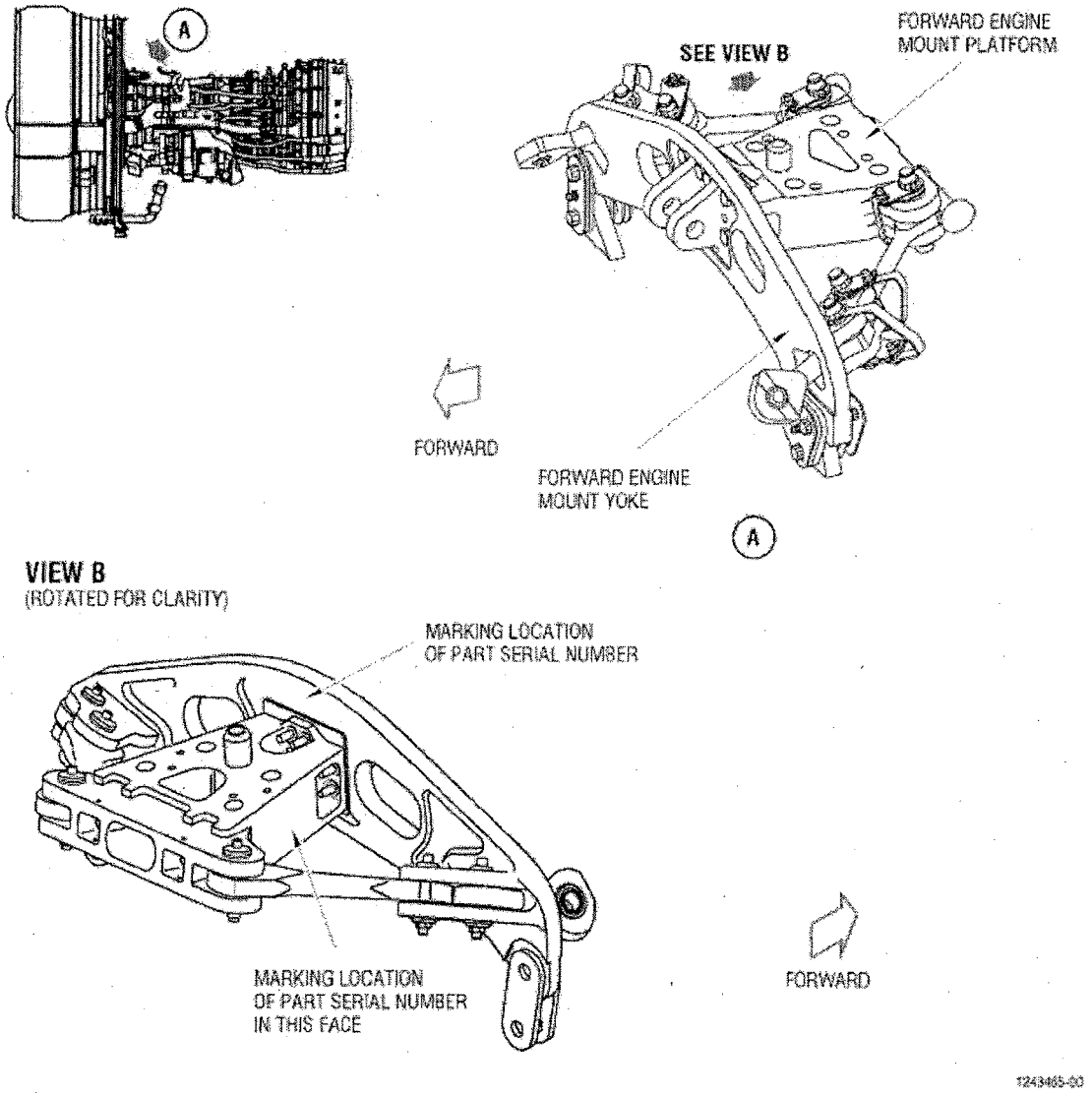

Location of Forward Engine Mount Platform and Forward Engine Mount Yoke
Figure 1

BILLING CODE 4910–13–C

(q) After the effective date of this AD, do not install a weld-repaired, cast forward engine mount platform or a weld-repaired,

cast forward engine mount yoke in any engine.

Alternative Methods of Compliance

(r) The Manager, Engine Certification Office, has the authority to approve alternative methods of compliance for this AD if requested using the procedures found in 14 CFR 39.19.

Issued in Burlington, Massachusetts, on December 7, 2006.

Robert Ganley,

Acting Manager, Engine and Propeller Directorate, Aircraft Certification Service.

[FR Doc. 06–9674 Filed 12–12–06; 8:45 am]

BILLING CODE 4910–13–P

DEPARTMENT OF TRANSPORTATION

Federal Aviation Administration

14 CFR Part 39

[Docket No. FAA–2005–20856; Directorate Identifier 2004–NE–25–AD]

RIN 2120–AA64

Airworthiness Directives; MT-Propeller Entwicklung GmbH Propellers

AGENCY: Federal Aviation Administration (FAA), Department of Transportation (DOT).

ACTION: Notice of proposed rulemaking (NPRM).

SUMMARY: The FAA proposes to supersede an existing airworthiness directive (AD) for certain MT-Propeller Entwicklung GmbH variable pitch and fixed pitch propellers manufactured before 1995 which had not been overhauled since April 1994. That AD currently requires overhauling the propeller blades and performing initial and repetitive visual inspections of affected propeller blades. That AD also requires removing all propeller blades from service with damaged erosion sheath bonding or loose erosion sheaths and installing any missing or damaged polyurethane protective strips. This proposed AD would require the same actions. This proposed AD results from the need to clarify the population of affected propellers previously listed in AD 2006–05–05. We are proposing this AD to prevent erosion sheath separation leading to damage of the airplane.

DATES: We must receive any comments on this proposed AD by February 12, 2007.

ADDRESSES: Use one of the following addresses to comment on this proposed AD.

- DOT Docket Web site: Go to *http://dms.dot.gov* and follow the instructions for sending your comments electronically.
- Government-wide rulemaking Web site: Go to *http://www.regulations.gov* and follow the instructions for sending your comments electronically.
- Mail: Docket Management Facility; U.S. Department of Transportation, 400 Seventh Street, SW., Nassif Building, Room PL–401, Washington, DC 20590–0001.
- Fax: (202) 493–2251.
- Hand Delivery: Room PL–401 on the plaza level of the Nassif Building, 400 Seventh Street, SW., Washington, DC, between 9 a.m. and 5 p.m., Monday through Friday, except Federal holidays.

Contact MT-Propeller USA, Inc., 1180 Airport Terminal Drive, Deland, FL 32724; telephone (386) 736–7762, fax (386) 736–7696 or visit *http://www.mt-propeller.com* for the service information identified in this proposed AD.

FOR FURTHER INFORMATION CONTACT: Frank Walsh, Aerospace Engineer, Boston Aircraft Certification Office, FAA, Engine and Propeller Directorate, 12 New England Executive Park, Burlington, MA 01803–5299; telephone (781) 238–7158, fax (781) 238–7170.

SUPPLEMENTARY INFORMATION:

Comments Invited

We invite you to send any written relevant data, views, or arguments regarding this proposal. Send your comments to an address listed under **ADDRESSES**. Include ''Docket No. FAA–2005–20856; Directorate Identifier 2004–NE–25–AD'' in the subject line of your comments. We specifically invite comments on the overall regulatory, economic, environmental, and energy aspects of the proposed AD. We will consider all comments received by the closing date and may amend the proposed AD in light of those comments.

We will post all comments we receive, without change, to *http://dms.dot.gov,* including any personal information you provide. We will also post a report summarizing each substantive verbal contact with FAA personnel concerning this proposed AD. Using the search function of the DMS Web site, anyone can find and read the comments in any of our dockets, including the name of the individual who sent the comment (or signed the comment on behalf of an association, business, labor union, etc.). You may review the DOT's complete Privacy Act Statement in the **Federal Register** published on April 11, 2000 (65 FR 19477–78) or you may visit *http://dms.dot.gov.*

Examining the AD Docket

You may examine the docket that contains the proposal, any comments received and any final disposition in person at the DMS Docket Office between 9 a.m. and 5 p.m., Monday through Friday, except Federal holidays. The Docket Office (telephone (800) 647–5227) is located on the plaza level of the Department of Transportation Nassif Building at the street address stated in **ADDRESSES**. Comments will be available in the AD docket shortly after the DMS receives them.

Discussion

On February 24, 2006, we issued AD 2006–05–05, Amendment 39–14502 (71 FR 11151, March 6, 2006). That AD requires overhaul of models MT, MTV–1, MTV–2, MTV–3, MTV–5, MTV–6, MTV–7, MTV–9, MTV–10, MTV–11, MTV–12, MTV–14, MTV–15, MTV–17, MTV–18, MTV–20, MTV–21, MTV–22, MTV–24, and MTV–25 propellers with serial numbers (SNs) below 95000, which had not been overhauled since April 1994, within 30 days after the effective date of the AD. That action also required performing initial and repetitive visual inspections of those propeller blades. That action also required removing all propeller blades from service with damaged erosion sheath bonding or loose erosion sheaths and to install any missing or damaged polyurethane protective strips. The European Aviation Safety Agency (EASA), which is the airworthiness authority for the European Union, notified us that an unsafe condition may exist on certain MT-Propeller Entwicklung GmbH propellers.

Actions Since AD 2006–05–05 Was Issued

Since AD 2006–05–05 was issued, MT-Propeller Entwicklung GmbH Propellers and EASA have clarified the population of affected propellers. AD 2006–05–05 described the affected propellers as variable pitch and fixed pitch propellers with serial numbers (SNs) below 95000. Because propellers with SNs starting with 00, 01, 02, 03, 04, 05, and 06, were manufactured in the years 2000, 2001, 2002, 2003, 2004, 2005, and 2006 respectively, some operators are confused as to whether their propeller SN is part of the affected population. For example, propeller SN 00246, manufactured in 2000, would appear to be part of the affected population because the number is below 95000. For clarification, we are proposing to identify the affected population as variable pitch and fixed pitch propellers manufactured before

1995 which had not been overhauled since April 1994. Also, since AD 2006–05–05 was issued, we discovered that propeller model MTV–25 was erroneously listed in the AD.

Relevant Service Information

We have reviewed and approved the technical contents of MT-Propeller Service Bulletin (SB) No. 8B, dated March 8, 2006, which lists the affected propeller population as models MT, MTV–1, MTV–2, MTV–3, MTV–5, MTV–6, MTV–7, MTV–9, MTV–10, MTV–11, MTV–12, MTV–14, MTV–15, MTV–17, MTV–18, MTV–20, MTV–21, MTV–22, and MTV–24 propellers, manufactured before 1995 which have not been overhauled since April 1994. This SB describes the visual inspections, removals, and installations proposed by this AD. EASA classified this SB as mandatory and issued AD No. 2006–0345, dated November 14, 2006, in order to ensure the airworthiness of these MT-Propeller Entwicklung GmbH propellers in Europe.

Bilateral Agreement Information

These propeller models are manufactured in Germany and are type certificated for operation in the United States under the provisions of Section 21.29 of the Federal Aviation Regulations (14 CFR 21.29) and the applicable bilateral airworthiness agreement. Under this bilateral airworthiness agreement, EASA kept us informed of the situation described above. We have examined the findings of EASA, reviewed all available information, and determined that AD action is necessary for products of this type design that are certificated for operation in the United States.

FAA's Determination and Requirements of the Proposed AD

We have evaluated all pertinent information and identified an unsafe condition that is likely to exist or develop on other products of this same type design. We are proposing this AD, which would require you to:

- Overhaul all installed propeller blades of propellers listed in the applicability, within 30 days after the effective date of this AD, unless previously done per AD 2006–05–05.
- Visually inspect certain MT-Propeller Entwicklung GmbH variable pitch and fixed pitch propellers manufactured before 1995.
- Remove from service, certain MT-Propeller Entwicklung GmbH variable pitch and fixed pitch propellers manufactured before 1995 if the propeller blades have damaged erosion sheath bonding or loose erosion sheaths.
- Install polyurethane protective strips onto propeller blades that are missing these strips or have damaged strips.

Costs of Compliance

We estimate that 103 of these MT-Propeller Entwicklung GmbH variable pitch and fixed pitch propellers installed on aircraft of U.S. registry would be affected by this proposed AD. We also estimate that it would take about 2 work-hours to inspect and install the polyurethane protective strip of each affected propeller, and 4 work-hours to remove a propeller requiring overhaul. The average labor rate is $80 per work-hour. Required parts to inspect and install the polyurethane protective strip of each affected propeller would cost about $20. Based on these figures, we estimate the total cost of the proposed AD to U.S. operators, to inspect and install protective strips to be $18,540.

Authority for This Rulemaking

Title 49 of the United States Code specifies the FAA's authority to issue rules on aviation safety. Subtitle I, Section 106, describes the authority of the FAA Administrator. Subtitle VII, Aviation Programs, describes in more detail the scope of the Agency's authority.

We are issuing this rulemaking under the authority described in Subtitle VII, Part A, Subpart III, Section 44701, ''General requirements.'' Under that section, Congress charges the FAA with promoting safe flight of civil aircraft in air commerce by prescribing regulations for practices, methods, and procedures the Administrator finds necessary for safety in air commerce. This regulation is within the scope of that authority because it addresses an unsafe condition that is likely to exist or develop on products identified in this rulemaking action.

Regulatory Findings

We have determined that this proposed AD would not have federalism implications under Executive Order 13132. This proposed AD would not have a substantial direct effect on the States, on the relationship between the national Government and the States, or on the distribution of power and responsibilities among the various levels of government.

For the reasons discussed above, I certify that the proposed regulation:

1. Is not a ''significant regulatory action'' under Executive Order 12866;

2. Is not a ''significant rule'' under the DOT Regulatory Policies and Procedures (44 FR 11034, February 26, 1979); and

3. Would not have a significant economic impact, positive or negative, on a substantial number of small entities under the criteria of the Regulatory Flexibility Act.

We prepared a regulatory evaluation of the estimated costs to comply with this proposed AD. See the **ADDRESSES** section for a location to examine the regulatory evaluation.

List of Subjects in 14 CFR Part 39

Air transportation, Aircraft, Aviation safety, Safety.

The Proposed Amendment

Accordingly, under the authority delegated to me by the Administrator, the Federal Aviation Administration proposes to amend 14 CFR part 39 as follows:

PART 39—AIRWORTHINESS DIRECTIVES

1. The authority citation for part 39 continues to read as follows:

Authority: 49 U.S.C. 106(g), 40113, 44701.

§ 39.13 [Amended]

2. The FAA amends § 39.13 by removing Amendment 39–14502 (71 FR 11151, March 6, 2006) and by adding a new airworthiness directive, to read as follows:

MT-Propeller Entwicklung GmbH: Docket No. FAA–2005–20856; Directorate Identifier 2004–NE–25–AD.

Comments Due Date

(a) The Federal Aviation Administration (FAA) must receive comments on this airworthiness directive (AD) action by February 12, 2007.

Affected ADs

(b) This AD supersedes AD 2006–05–05.

Applicability

(c) This AD applies to MT-Propeller Entwicklung GmbH, models MT, MTV–1, MTV–2, MTV–3, MTV–5, MTV–6, MTV–7, MTV–9, MTV–10, MTV–11, MTV–12, MTV–14, MTV–15, MTV–17, MTV–18, MTV–20, MTV–21, MTV–22, and MTV–24 propellers manufactured before 1995 which have not been overhauled since April 1994. These propellers may be installed on, but not limited to, Apex ATL, Apex DR400, EADS Socata Rallye, Extra EA–300, Piper PA–46, Rene Fournier RF4, Sukhoi SU–26, SU–29, and SU–31; Yakovlev YAK–52, YAK–54, and YAK–55; and Technoavia SM–92 airplanes.

Unsafe Condition

(d) This AD results from the need to clarify the population of affected propellers previously listed in AD 2006–05–05. We are issuing this AD to prevent erosion sheath separation leading to damage of the airplane.

Compliance

(e) You are responsible for having the actions required by this AD performed within

the compliance times specified unless the actions have already been done.

Note 1: Information about inspection procedures and acceptable limits can be found in Table 1 of this AD.

Overhaul of Propeller Blades

(f) Overhaul all installed propeller blades of propellers listed in the applicability, within 30 days after the effective date of this AD, unless previously done per AD 2006–05–05.

Initial Visual Inspection of the Propeller Blade

(g) During the next preflight inspection or 100-hour inspection, whichever occurs first, after the effective date of this AD, inspect all MT and MTV propellers by doing the following:

(1) Determine if the erosion sheath of any propeller blade is cracked or loose; and

(2) Determine if any propeller blade has other damage out of acceptable limits.

(3) Before the next flight, remove from service those propeller blades with a cracked or loose erosion sheath, or other damage affecting airworthiness.

TABLE 1.—SERVICE INFORMATION

For Propeller Model . . .	See Operation and Installation Manual . . .
MT	No. E–112, issued Nov. 1993 or later.
MTV–1, MTV–7, MTV–10, MTV–17, MTV–18, MTV–20	No. E–118, issued March 1994 or later
MTV–5, MTV–6, MTV–9, MTV–11, MTV–12, MTV–14, MTV–15, MTV–21, MTV–22, MTV–25.	No. E–124, issued March 1994 or later.
MTV–2, MTV–3	No. E–148, issued March 1994 or later.
MTV–24	No. E–309, issued March 1994 or later.

Initial Visual Inspection of the Propeller Blade Polyurethane Strip

(h) During the next pilot's preflight inspection after the effective date of this AD, if the polyurethane protective strip on the leading edge of the inner portion of the blade is found to be damaged or missing, the polyurethane protective strip must be replaced or installed within 10 flight hours. If electrical de-icing boots are installed, no polyurethane protective strips are required.

Repetitive Visual Inspection of the Propeller Blade

(i) If after the effective date of this AD, any propeller blade erosion sheath found to be cracked or loose during the pilot's preflight inspection, or 100-hour inspection, or annual inspection, must be repaired, replaced, or overhauled before the next flight.

Repetitive Visual Inspection of the Propeller Blade Polyurethane Strip

(j) If after the effective date of this AD, any propeller blade polyurethane protective strip found to be damaged or missing during the pilot's preflight inspection, or 100-hour inspection, or annual inspection, must be replaced or installed within 10 flight hours. If electrical de-icing boots are installed, polyurethane protective strips are not required.

Alternative Methods of Compliance

(k) The Manager, Boston Aircraft Certification Office, has the authority to approve alternative methods of compliance for this AD if requested using the procedures found in 14 CFR 39.19.

Special Flight Permits

(l) Special flight permits are prohibited.

Related Information

(m) MT-Propeller Entwicklung GmbH, Service Bulletin No. 8B, dated March 8, 2006, pertains to the subject of this AD. European Aviation Safety Agency AD No. 2006–0345, dated November 14, 2006, also addresses the subject of this AD.

Issued in Burlington, Massachusetts, on December 6, 2006.

Diane Cook,

Acting Manager, Engine and Propeller Directorate, Aircraft Certification Service.

[FR Doc. E6–21184 Filed 12–12–06; 8:45 am]

BILLING CODE 4910–13–P

DEPARTMENT OF STATE

22 CFR Parts 22 and 51

RIN 1400–AC22

[Public Notice 5643]

Card Format Passport; Changes to Passport Fee Schedule

AGENCY: Department of State.

ACTION: Proposed Rule; Extension of Comment Period.

SUMMARY: This document extends the comment period and provides an additional venue through which to make comments for the proposed regulation published in the **Federal Register** of Tuesday, October 17, 2006. The regulation relates to changes to the Department's Passport Fee Schedule, and defines the passport card.

DATES: The comment period for the proposed rule published at 71 FR 60928, October 17, 2006, is extended until January 7, 2007.

ADDRESSES: You may submit comments, identified by any of the following methods:

- *Mail* (paper, disk, or CD–ROM submissions): Comments by mail are to be addressed to the Office of Passport Policy, Planning and Advisory Services, Bureau of Consular Affairs, U.S. Department of State, 2100 Pennsylvania Ave. NW., Suite 300, Washington, DC 20037.
- *Internet:* Comments by Internet are to be sent to *http://www.regulation.gov*. This notice can also be viewed from this Internet address.
- *Electronically:* You may submit electronic comments to *PassportCardComments@state.gov*. Attachments must be in Microsoft Word.

Instructions: All submissions must include the agency name and docket number. All comments will be posted without change to *http://www.regulation.gov*, including any personal information sent with each comment.

FOR FURTHER INFORMATION CONTACT: Consuelo Pachon, Office of Passport Policy, Planning and Advisory Services, Bureau of Consular Affairs, 2100 Pennsylvania Avenue, NW., Suite 3000, Washington, DC, telephone number 202–663–2431.

SUPPLEMENTARY INFORMATION: The comment period is being extended from December 18, 2006, to January 7, 2007, to accommodate the submission of comments electronically on the *www.regulations.gov* Web site, or to *PassportCardComments@state.gov*, as well as via mail. This extension will provide an additional opportunity for public comment on this regulation. The e-mail address, *PassportCardComments@state.gov*, provides an additional venue through which to make comments, and will allow for public submission to the *www.regulations.gov*. Web site.

Dated: December 7, 2006.

Susan Bozinko,

Division Chief for Office of Legal Affairs and Law Enforcement Liaison, Department of State.

[FR Doc. E6–21219 Filed 12–12–06; 8:45 am]

BILLING CODE 4710–06–P

NATIONAL LABOR RELATIONS BOARD

29 CFR Part 102

Privacy Act of 1974; Implementation

AGENCY: National Labor Relations Board.

ACTION: Proposed rule exempting three systems of records and portions of four other systems of records from certain provisions of the Privacy Act, and amending Agency's existing Privacy Act regulations.

SUMMARY: The National Labor Relations Board (NLRB) proposes to exempt three systems of records and portions of four other systems of records from certain provisions of the Privacy Act of 1974, 5 U.S.C. 552a, pursuant to Section (k)(2) of that Act, 5 U.S.C. 552a(k)(2), and to amend existing Privacy Act regulations for clarity.

DATES: Comments on the proposed rule must be received on or before January 22, 2007.

ADDRESSES: All persons who desire to submit written comments for consideration by the Agency regarding the proposed rule shall mail them to the Agency's Privacy Officer, National Labor Relations Board, Room 7608, 1099 14th Street, NW., Washington, DC 20570–0001, or submit them electronically to *PrivacyActComments@nlrb.gov.* Comments may also be submitted electronically through *http://www.regulations.gov*, which contains a copy of this proposed rule.

Copies of all such communications will be available for examination during normal business hours (8:30 a.m. to 5 p.m. Monday through Friday, excluding Federal holidays) in the Agency's Reading Room, located in the Case Records Unit, National Labor Relations Board, Room 9201, 1099 14th Street, NW., Washington, DC 20570–0001.

FOR FURTHER INFORMATION CONTACT: Tommie Gregg, Sr., Privacy Act Officer, National Labor Relations Board, Room 7608, 1099 14th Street, NW., Washington, DC 20570–0001, (202) 273–2833, *Tommie.Gregg@nlrb.gov.*

SUPPLEMENTARY INFORMATION: Elsewhere in today's issue of the **Federal Register**, the Agency is proposing twelve systems of records under the Privacy Act of 1974, nine of which consist of an electronic case tracking system and associated paper or electronic files, and the remaining three systems consist of electronic case tracking systems only.

The Agency intends to change the section number of its Privacy Act regulations, currently designated as Section 102.117(f)–(q) of Part 102, 29 CFR Subpart K, immediately following the Agency's Freedom of Information Act regulations, by creating a new section for the Privacy Act regulations, in order to more clearly separate them from the Freedom of Information Act regulations. Under this change, the Agency's Privacy Act regulations will continue to immediately follow the Freedom of Information Act regulations at Section 102.117(a)–(e), but will be newly designated as Section 102.117a, paragraphs (a) through (n), of Part 102, 29 CFR Subpart K.

The Agency also intends to amend its Privacy Act regulations providing for notice, access, and amendment of Privacy Act records, Section 102.117a(a), (b), and (d) (as newly designated), 29 CFR 102.117a(a), (b), and (d), in order to clarify that these provisions apply only to the extent that requested information from the Privacy Act system of records at issue has not been exempted from such Privacy Act provisions.

Pursuant to subsection (k)(2) of the Privacy Act (5 U.S.C. 552a(k)(2)), and for the reasons set forth below, the Board proposes to include within the new Section 102.117a, two additional paragraphs (m) and (n) exempting three systems of records (the Case Activity Tracking System (CATS) and Associated Regional Office Files (NLRB–25), the Regional Advice and Injunction Litigation System (RAILS) and Associated Headquarters Files (NLRB–28), and the Appeals Case Tracking System (ACTS) and Associated Headquarters Files (NLRB–30)), and portions of four other systems of records (the Judicial Case Management System—Pending Case List (JCMS–PCL) and Associated Headquarters Files (NLRB–21), the Solicitor's System (SOL) and Associated Headquarters Files (NLRB–23), the Special Litigation Branch Case Tracking System (SPLIT) and Associated Headquarters Files (NLRB–27), and the Freedom of Information Act Tracking System (FTS) and Associated Agency Files (NLRB–32)) from subsections (c)(3), (d), (e)(1), (e)(4)(G), (e)(4)(H), (e)(4)(I), and (f) of the Privacy Act.

Subsection (k)(2) of the Privacy Act authorizes the head of an agency to exempt a system of records from subsections (c)(3), (d), (e)(1), (e)(4)(G), (e)(4)(H), (e)(4)(I), and (f) of the Privacy Act (5 U.S.C. 552a(c)(3), (d), (e)(1), (e)(4)(G), (e)(4)(H), (e)(4)(I), (f)) if the system of records is investigatory material compiled for law enforcement purposes other than material within the scope of subsection (j)(2) of the Privacy Act (5 U.S.C. 552a(j)(2)). As indicated in the Agency's notice proposing the systems of records, all or portions of seven of the proposed systems contain information compiled by the Agency in the course of carrying out its law enforcement responsibilities in conducting unfair labor practice and representation investigations. (All references in this proposed rule to the Agency's ''unfair labor practice cases'' include the portion of such cases known as ''compliance,'' which is the effectuation of remedial provisions of a settlement agreement, Board order, or court judgment enforcing a Board order (see NLRB Casehandling Manual, Part Three—Compliance Proceedings, § 10500.1).) This information meets the criteria of subsection (k)(2).

The requirements of subsections (c)(3), (d), (e)(1), (e)(4)(G), (e)(4)(H), (e)(4)(I), and (f) of the Privacy Act, if applied to the seven proposed systems of records, would seriously impair the ability of the Agency to conduct investigations of alleged unfair labor practice violations and representation issues. The disclosure requirements as set forth in the provisions for notice, access, amendment, review, and accountings, could enable subject individuals to take action to avoid detection of improper activities, including but not limited to concealing or destroying evidence, and intimidating sources and witnesses, or otherwise to interfere with the investigation. In addition, the requirement that information maintained in the system be limited to that which is relevant and necessary could foreclose investigators from acquiring or receiving information the relevance and necessity of which is not readily apparent and could only be ascertained after a complete review and evaluation of all the evidence.

The requirements of these subsections are largely unnecessary given the notice and procedural protections afforded by the Agency's administrative proceedings. These protections (*i.e.*, notice and, in appropriate cases, opportunity for hearing), assure that subject individuals will have the opportunity to learn of the existence of, and to challenge, those records that the Agency uses in administrative proceedings, and in any subsequent judicial proceeding.

This proposed rule relates to individuals rather than small business entities. Accordingly, pursuant to the requirements of the Regulatory Flexibility Act, 5 U.S.C. 601–612, this rule will not have a significant impact on a substantial number of small business entities.

In accordance with the Paperwork Reduction Act of 1995 (44 U.S.C. 3501 *et seq.*), the Agency has determined that this proposed rule would not impose new recordkeeping, application, reporting, or other types of information collection requirements on the public.

The proposed rule will not have a substantial direct effect on the States, on the relationship between the national Government and the States, or on the distribution of power and responsibilities among levels of government. Therefore, it is determined that this proposed rule does not have federalism implications under Executive Order 13132.

In accordance with Executive Order 12866, it has been determined that this proposed rule is not a ''significant regulatory action,'' and therefore does not require a Regulatory Impact Analysis.

List of Subjects in 29 CFR Part 102

Privacy, Reporting and Recordkeeping Requirements.

For the reasons stated in the Supplementary Information section, Part 102 of title 29, ch. I of the Code of Federal Regulations, is proposed to be amended as follows:

PART 102—RULES AND REGULATIONS, SERIES 8

Subpart K—Records and Information

1. The authority citation for part 102 is revised to read as follows:

Authority: Sections 1, 6, National Labor Relations Act (29 U.S.C. 151, 156). Section 102.117 also issued under section 552(a)(4)(A) of the Freedom of Information Act, as amended (5 U.S.C. 552(a)(4)(A)), and Section 102.117a also issued under section 552a(j) and (k) of the Privacy Act of 1974 (5 U.S.C. 552a (j) and (k)). Sections 102.143 through 102.155 also issued under section 504(c)(1) of the Equal Access to Justice Act, as amended (5 U.S.C. 504(c)(1)).

2. Section 102.117 of subpart K is amended by:

a. Removing paragraphs (f) through (q);

b. In part 102, revise all references to paragraphs 102.117(f) through (q) to read paragraphs 102.117a (a) through (l).

c. The heading of § 102.117 is revised to read as follows:

§ 102.117 Freedom of Information Act Regulations: Board materials and formal documents available for public inspection and copying; requests for described records; time limit for response; appeal from denial of request; fees for document search and duplication; files and records not subject to inspection.

3. Section 102.117a is added to read as follows:

§ 102.117a Privacy Act Regulations: notification as to whether a system of records contains records pertaining to requesting individuals; requests for access to records, amendment of such records, or accounting of disclosures; time limits for response; appeal from denial of requests; fees for document duplication; files and records exempted from certain Privacy Act requirements.

(a) An individual will be informed whether a system of records maintained by this Agency contains a record pertaining to such individual. An inquiry should be made in writing or in person during normal business hours to the official of this Agency designated for that purpose and at the address set forth in a notice of a system of records published by this Agency, in a Notice of Systems of Governmentwide Personnel Records published by the Office of Personnel Management, or in a Notice of Governmentwide Systems of Records published by the Department of Labor. Copies of such notices, and assistance in preparing an inquiry, may be obtained from any Regional Office of the Board or at the Board offices at 1099 14th Street, NW., Washington, DC 20570. The inquiry should contain sufficient information, as defined in the notice, to identify the record. Reasonable verification of the identity of the inquirer, as described in paragraph (e) of this section, will be required to assure that information is disclosed to the proper person. The Agency shall acknowledge the inquiry in writing within 10 days (excluding Saturdays, Sundays, and legal public holidays) and, wherever practicable, the acknowledgment shall supply the information requested. If, for good cause shown, the Agency cannot supply the information within 10 days, the inquirer shall within that time period be notified in writing of the reasons therefor and when it is anticipated the information will be supplied. An acknowledgment will not be provided when the information is supplied within the 10-day period. If the Agency refuses to inform an individual whether a system of records contains a record pertaining to an individual, the inquirer shall be notified in writing of that determination and the reasons therefor, and of the right to obtain review of that determination under the provisions of paragraph (f) of this section. The provisions of this paragraph do not apply to the extent that requested information from the relevant system of records has been exempted from this Privacy Act requirement.

(b) An individual will be permitted access to records pertaining to such individual contained in any system of records described in the notice of system of records published by this Agency, or access to the accounting of disclosures from such records. The request for access must be made in writing or in person during normal business hours to the person designated for that purpose and at the address set forth in the published notice of system of records. The request for access must be made in writing or in person during normal business hours to the person designated for that purpose and at the address set forth in the published notice of system of records. Copies of such notices, and assistance in preparing a request for access, may be obtained from any Regional Office of the Board or at the Board offices at 1099 14th Street, NW., Washington, DC 20570. Reasonable verification of the identity of the requester, as described in paragraph (e) of this section, shall be required to assure that records are disclosed to the proper person. A request for access to records or the accounting of disclosures from such records shall be acknowledged in writing by the Agency within 10 days of receipt (excluding Saturdays, Sundays, and legal public holidays) and, wherever practicable, the acknowledgment shall inform the requester whether access will be granted and, if so, the time and location at which the records or accounting will be made available. If access to the record or accounting is to be granted, the record or accounting will normally be provided within 30 days (excluding Saturdays, Sundays, and legal public holidays) of the request, unless for good cause shown the Agency is unable to do so, in which case the individual will be informed in writing within that 30-day period of the reasons therefor and when it is anticipated that access will be granted. An acknowledgment of a request will not be provided if the record is made available within the 10-day period. If an individual's request for access to a record or an accounting of disclosure from such a record under the provisions of this paragraph is denied, the notice informing the individual of the denial shall set forth the reasons therefor and advise the individual of the right to obtain a review of that determination under the provisions of paragraph (f) of this section. The provisions of this paragraph do not apply to the extent that requested information from the relevant system of records has been exempted from this Privacy Act requirement.

(c) An individual granted access to records pertaining to such individual contained in a system of records may review all such records. For that

purpose the individual may be accompanied by a person of the individual's choosing, or the record may be released to the individual's representative who has written consent of the individual, as described in paragraph (e) of this section. A first copy of any such record or information will ordinarily be provided without charge to the individual or representative in a form comprehensible to the individual. Fees for any other copies of requested records shall be assessed at the rate of 10 cents for each sheet of duplication.

(d) An individual may request amendment of a record pertaining to such individual in a system of records maintained by this Agency. A request for amendment of a record must be in writing and submitted during normal business hours to the person designated for that purpose and at the address set forth in the published notice for the system of records containing the record of which amendment is sought. Copies of such notices, and assistance in preparing a request for amendment, may be obtained from any Regional Office of the Board or at the Board offices at 1099 14th Street, NW., Washington, DC 20570. The requester must provide verification of identity as described in paragraph (e) of this section, and the request should set forth the specific amendment requested and the reason for the requested amendment. The Agency shall acknowledge in writing receipt of the request within 10 days of receipt (excluding Saturdays, Sundays, and legal public holidays) and, wherever practicable, the acknowledgment shall advise the individual of the determination of the request. If the review of the request for amendment cannot be completed and a determination made within 10 days, the review shall be completed as soon as possible, normally within 30 days (Saturdays, Sundays, and legal public holidays excluded) of receipt of the request unless unusual circumstances preclude completing the review within that time, in which event the requester will be notified in writing within that 30-day period of the reasons for the delay and when the determination of the request may be expected. If the determination is to amend the record, the requester shall be so notified in writing and the record shall be amended in accordance with that determination. If any disclosures accountable under the provisions of 5 U.S.C. 552a(c) have been made, all previous recipients of the record which was amended shall be advised of the amendment and its substance. If it is determined that the request should not be granted, the requester shall be notified in writing of that determination and of the reasons therefor, and advised of the right to obtain review of the adverse determination under the provisions of paragraph (f) of this section. The provisions of this paragraph do not apply to the extent that requested information from the relevant system of records has been exempted from this Privacy Act requirement.

(e) Verification of the identification of individuals required under paragraphs (a), (b), (c), and (d) of this section to assure that records are disclosed to the proper person shall be required by the Agency to an extent consistent with the nature, location, and sensitivity of the records being disclosed. Disclosure of a record to an individual in person will normally be made upon the presentation of acceptable identification. Disclosure of records by mail may be made on the basis of the identifying information set forth in the request. Depending on the nature, location, and sensitivity of the requested record, a signed notarized statement verifying identity may be required by the Agency. Proof of authorization as representative to have access to a record of an individual shall be in writing, and a signed notarized statement of such authorization may be required by the Agency if the record requested is of a sensitive nature.

(f)(1) Review may be obtained with respect to:

(i) A refusal, under paragraph (a) or (g) of this section, to inform an individual if a system of records contains a record concerning that individual,

(ii) A refusal, under paragraph (b) or (g) of this section, to grant access to a record or an accounting of disclosure from such a record, or

(iii) A refusal, under paragraph (d) of this section, to amend a record.

(iv) The request for review should be made to the Chairman of the Board if the system of records is maintained in the office of a Member of the Board, the office of the Executive Secretary, the office of the Solicitor, the Division of Information, or the Division of Administrative Law Judges. Consonant with the provisions of section 3(d) of the National Labor Relations Act, and the delegation of authority from the Board to the General Counsel, the request should be made to the General Counsel if the system of records is maintained by an office of the Agency other than those enumerated above. Either the Chairman of the Board or the General Counsel may designate in writing another officer of the Agency to review the refusal of the request. Such review shall be completed within 30 days (excluding Saturdays, Sundays, and legal public holidays) from the receipt of the request for review unless the Chairman of the Board or the General Counsel, as the case may be, for good cause shown, shall extend such 30-day period.

(2) If, upon review of a refusal under paragraph (a) or (g) of this section, the reviewing officer determines that the individual should be informed of whether a system of records contains a record pertaining to that individual, such information shall be promptly provided. If the reviewing officer determines that the information was properly denied, the individual shall be so informed in writing with a brief statement of the reasons therefor.

(3) If, upon review of a refusal under paragraph (b) or (g) of this section, the reviewing officer determines that access to a record or to an accounting of disclosures should be granted, the requester shall be so notified and the record or accounting shall be promptly made available to the requester. If the reviewing officer determines that the request for access was properly denied, the individual shall be so informed in writing with a brief statement of the reasons therefor, and of the right to judicial review of that determination under the provisions of 5 U.S.C. 552a(g)(1)(B).

(4) If, upon review of a refusal under paragraph (i) of this section, the reviewing official grants a request to amend, the requester shall be so notified, the record shall be amended in accordance with the determination, and, if any disclosures accountable under the provisions of 5 U.S.C. 552a(c) have been made, all previous recipients of the record which was amended shall be advised of the amendment and its substance. If the reviewing officer determines that the denial of a request for amendment should be sustained, the Agency shall advise the requester of the determination and the reasons therefor, and that the individual may file with the Agency a concise statement of the reason for disagreeing with the determination, and may seek judicial review of the Agency's denial of the request to amend the record. In the event a statement of disagreement is filed, that statement—

(i) will be made available to anyone to whom the record is subsequently disclosed together with, at the discretion of the Agency, a brief statement summarizing the Agency's reasons for declining to amend the record, and

(ii) will be supplied, together with any Agency statements, to any prior recipients of the disputed record to the

extent that an accounting of disclosure was made.

(g) To the extent that portions of system of records described in notices of Governmentwide systems of records published by the Office of Personnel Management are identified by those notices as being subject to the management of an officer of this Agency, or an officer of this Agency is designated as the official to contact for information, access, or contents of those records, individual requests for access to those records, requests for their amendment, and review of denials of requests for amendment shall be in accordance with the provisions of 5 CFR part 297, subpart A, § 297.101, *et seq.*, as promulgated by the Office of Personnel Management. To the extent that portions of system of records described in notices of Governmentwide system of records published by the Department of Labor are identified by those notices as being subject to the management of an officer of this Agency, or an officer of this Agency is designated as the official to contact for information, access, or contents of those records, individual requests for access to those records, requests for their amendment, and review of denials of requests for amendment shall be in accordance with the provisions of this rule. Review of a refusal to inform an individual whether such a system of records contains a record pertaining to that individual and review of a refusal to grant an individual's request for access to a record in such a system may be obtained in accordance with the provisions of paragraph (f) of this section.

(h) Pursuant to 5 U.S.C. 552a(j)(2), the system of records maintained by the Office of the Inspector General of the National Labor Relations Board that contains Investigative Files shall be exempted from the provisions of 5 U.S.C. 552a, except subsections (b), (c)(1) and (2), (e)(4)(A) through (F), (e)(6), (7), (9), (10), and (11), and (i), from 29 CFR 102.117(c) and (d), and from 29 CFR 102.117a(a), (b), (c), (d), (e), and (f), insofar as the system contains investigatory material compiled for criminal law enforcement purposes.

(i) Pursuant to 5 U.S.C. 552a(k)(2), the system of records maintained by the Office of the Inspector General of the National Labor Relations Board that contains the Investigative Files shall be exempted from 5 U.S.C. 552a(c)(3), (d), (e)(1), (e)(4)(G), (H), and (I), and (f), from 29 CFR 102.117 (c) and (d), and from 29 CFR 102.117a(a), (b), (c), (d), (e), and (f), insofar as the system contains investigatory material compiled for law enforcement purposes not within the scope of the exemption at 29 CFR 102.117a(h).

(j) Privacy Act exemptions contained in paragraphs (h) and (i) of this section are justified for the following reasons:

(1) 5 U.S.C. 552a(c)(3) requires an agency to make the accounting of each disclosure of records available to the individual named in the record at his/her request. These accountings must state the date, nature, and purpose of each disclosure of a record and the name and address of the recipient. Accounting for each disclosure would alert the subjects of an investigation to the existence of the investigation and the fact that they are subjects of the investigation. The release of such information to the subjects of an investigation would provide them with significant information concerning the nature of the investigation and could seriously impede or compromise the investigation, endanger the physical safety of confidential sources, witnesses, law enforcement personnel, and their families and lead to the improper influencing of witnesses, the destruction of evidence, or the fabrication of testimony.

(2) 5 U.S.C. 552a(c)(4) requires an agency to inform any person or other agency about any correction or notation of dispute made by the agency in accordance with subsection (d) of the Act. Since this system of records is being exempted from subsection (d) of the Act, concerning access to records, this section is inapplicable to the extent that this system of records will be exempted from subsection (d) of the Act.

(3) 5 U.S.C. 552a(d) requires an agency to permit an individual to gain access to records pertaining to him/her, to request amendment to such records, to request a review of an agency decision not to amend such records, and to contest the information contained in such records. Granting access to records in this system of records could inform the subject of an investigation of an actual or potential criminal violation, of the existence of that investigation, of the nature and scope of the information and evidence obtained as to his/her activities, or of the identity of confidential sources, witnesses, and law enforcement personnel and could provide information to enable the subject to avoid detection or apprehension. Granting access to such information could seriously impede or compromise an investigation, endanger the physical safety of confidential sources, witnesses, law enforcement personnel, and their families, lead to the improper influencing of witnesses, the destruction of evidence, or the fabrication of testimony, and disclose investigative techniques and procedures. In addition, granting access to such information could disclose classified, security-sensitive, or confidential business information and could constitute an unwarranted invasion of the personal privacy of others.

(4) 5 U.S.C. 552a(e)(1) requires each agency to maintain in its records only such information about an individual as is relevant and necessary to accomplish a purpose of the agency required by statute or by executive order of the President. The application of this provision could impair investigations and law enforcement because it is not always possible to detect the relevance or necessity of specific information in the early stages of an investigation. Relevance and necessity are often questions of judgment and timing, and it is only after the information is evaluated that the relevance and necessity of such information can be established. In addition, during the course of the investigation, the investigator may obtain information which is incidental to the main purpose of the investigative jurisdiction of another agency. Such information cannot readily be segregated. Furthermore, during the course of the investigation, the investigator may obtain information concerning the violation of laws other than those which are within the scope of his/her jurisdiction. In the interest of effective law enforcement, OIG investigators should retain this information, since it can aid in establishing patterns of criminal activity and can provide valuable leads for other law enforcement agencies.

(5) 5 U.S.C. 552a(e)(2) requires an agency to collect information to the greatest extent practicable directly from the subject individual when the information may result in adverse determinations about an individual's rights, benefits, and privileges under Federal programs. The application of this provision could impair investigations and law enforcement by alerting the subject of an investigation, thereby enabling the subject to avoid detection or apprehension, to influence witnesses improperly, to destroy evidence, or to fabricate testimony. Moreover, in certain circumstances the subject of an investigation cannot be required to provide information to investigators and information must be collected from other sources. Furthermore, it is often necessary to collect information from sources other than the subject of the investigation to

verify the accuracy of the evidence collected.

(6) 5 U.S.C. 552a(e)(3) requires an agency to inform each person whom it asks to supply information, on a form that can be retained by the person, of the authority under which the information is sought and whether disclosure is mandatory or voluntary; of the principal purposes for which the information is intended to be used; of the routine uses which may be made of the information; and of the effects on the person, if any, of not providing all or any part of the requested information. The application of this provision could provide the subject of an investigation with substantial information about the nature of that investigation that could interfere with the investigation. Moreover, providing such a notice to the subject of an investigation could seriously impede or compromise an undercover investigation by revealing its existence and could endanger the physical safety of confidential sources, witnesses, and investigators by revealing their identities.

(7) 5 U.S.C. 552a(e)(4)(G) and (H) require an agency to publish a **Federal Register** notice concerning its procedures for notifying an individual, at his/her request, if the system of records contains a record pertaining to him/her, how to gain access to such a record and how to contest its content. Since this system of records is being exempted from subsection (f) of the Act, concerning agency rules, and subsection (d) of the Act, concerning access to records, these requirements are inapplicable to the extent that this system of records will be exempt from subsections (f) and (d) of the Act. Although the system would be exempt from these requirements, OIG has published information concerning its notification, access, and contest procedures because, under certain circumstances, OIG could decide it is appropriate for an individual to have access to all or a portion of his/her records in this system of records.

(8) 5 U.S.C. 552a(e)(4)(I) requires an agency to publish a **Federal Register** notice concerning the categories of sources of records in the system of records. Exemption from this provision is necessary to protect the confidentiality of the sources of information, to protect the privacy and physical safety of confidential sources and witnesses, and to avoid the disclosure of investigative techniques and procedures. Although the system will be exempt from this requirement, OIG has published such a notice in broad generic terms.

(9) 5 U.S.C. 552a(e)(5) requires an agency to maintain its records with such accuracy, relevance, timeliness, and completeness as is reasonably necessary to assure fairness to the individual in making any determination about the individual. Since the Act defines ''maintain'' to include the collection of information, complying with this provision could prevent the collection of any data not shown to be accurate, relevant, timely, and complete at the moment it is collected. In collecting information for criminal law enforcement purposes, it is not possible to determine in advance what information is accurate, relevant, timely, and complete. Facts are first gathered and then placed into a logical order to prove or disprove objectively the criminal behavior of an individual. Material which seems unrelated, irrelevant, or incomplete when collected can take on added meaning or significance as the investigation progresses. The restrictions of this provision could interfere with the preparation of a complete investigative report, thereby impeding effective law enforcement.

(10) 5 U.S.C. 552a(e)(8) requires an agency to make reasonable efforts to serve notice on an individual when any record on such individual is made available to any person under compulsory legal process when such process becomes a matter of public record. Complying with this provision could prematurely reveal an ongoing criminal investigation to the subject of the investigation.

(11) 5 U.S.C. 552a(f)(1) requires an agency to promulgate rules which shall establish procedures whereby an individual can be notified in response to his/her request if any system of records named by the individual contains a record pertaining to him/her. The application of this provision could impede or compromise an investigation or prosecution if the subject of an investigation were able to use such rules to learn of the existence of an investigation before it could be completed. In addition, mere notice of the fact of an investigation could inform the subject and others that their activities are under or may become the subject of an investigation and could enable the subjects to avoid detection or apprehension, to influence witnesses improperly, to destroy evidence, or to fabricate testimony. Since this system would be exempt from subsection (d) of the Act, concerning access to records, the requirements of subsection (f)(2) through (5) of the Act, concerning agency rules for obtaining access to such records, are inapplicable to the extent that this system of records will be exempted from subsection (d) of the Act. Although this system would be exempt from the requirements of subsection (f) of the Act, OIG has promulgated rules which establish agency procedures because, under certain circumstances, it could be appropriate for an individual to have access to all or a portion of his/her records in this system of records.

(12) 5 U.S.C. 552a(g) provides for civil remedies if an agency fails to comply with the requirements concerning access to records under subsections (d)(1) and (3) of the Act; maintenance of records under subsection (e)(5) of the Act; and any other provision of the Act, or any rule promulgated thereunder, in such a way as to have an adverse effect on an individual. Since this system of records would be exempt from subsections (c)(3) and (4), (d), (e)(1), (2), and (3) and (4)(G) through (I), (e)(5), and (8), and (f) of the Act, the provisions of subsection (g) of the Act would be inapplicable to the extent that this system of records will be exempted from those subsections of the Act.

(k) Pursuant to 5 U.S.C. 552a(k)(2), the system of records maintained by the NLRB containing Agency Disciplinary Case Files (Nonemployees) shall be exempted from the provisions of 5 U.S.C. 552a (c)(3), (d), (e)(1), (e)(4)(G), (H), and (I), and (f) insofar as the system contains investigatory material compiled for law enforcement purposes other than material within the scope of 5 U.S.C. 552a(j)(2).

(l) The Privacy Act exemption set forth in paragraph (k) of this section is claimed on the ground that the requirements of subsections (c)(3), (d), (e)(1), (e)(4)(G), (H), and (I), and (f) of the Privacy Act, if applied to Agency Disciplinary Case Files, would seriously impair the ability of the NLRB to conduct investigations of alleged or suspected violations of the NLRB's misconduct rules, as set forth in paragraphs (j) (1), (3), (4), (7), (8), and (11) of this section.

(m) Pursuant to 5 U.S.C. 552a(k)(2), the following three proposed systems of records shall be exempted in their entirety from the provisions of 5 U.S.C. 552a(c)(3), (d), (e)(1), (e)(4)(G), (e)(4)(H), (e)(4)(I), and (f), because the systems contain investigatory material compiled for law enforcement purposes, other than material within the scope of nl;5 U.S.C. 552a(j)(2): Case Activity Tracking System (CATS) and Associated Regional Office Files (NLRB–25), Regional Advice and Injunction Litigation System (RAILS) and Associated Headquarters Files (NLRB–28), and Appeals Case Tracking System (ACTS) and Associated

Headquarters Files (NLRB–30). Pursuant to 5 U.S.C. 552a(k)(2), limited categories of information from the following four proposed systems of records shall be exempted from the provisions of nl;5 U.S.C. 552a(c)(3), (d), (e)(1), (e)(4)(G), (e)(4)(H), (e)(4)(I), and (f), insofar as the systems contain investigatory material compiled for law enforcement purposes, other than material within the scope of 5 U.S.C. 552a(j)(2):

(1) the Judicial Case Management Systems—Pending Case List (JCMS–PCL) and Associated Headquarters Files (NLRB–21)—information relating to requests to file injunctions under 29 U.S.C. 160(j), requests to initiate federal court contempt proceedings, certain requests that the Board initiate litigation or intervene in non-Agency litigation, and any other investigatory material compiled for law enforcement purposes;

(2) the Solicitor's System (SOL) and Associated Headquarters Files (NLRB–23)—information relating to requests to file injunctions under 29 U.S.C. 160(j), requests to initiate federal court contempt proceedings, certain requests that the Board initiate litigation or intervene in non-Agency litigation, and any other investigatory material compiled for law enforcement purposes;

(3) The Special Litigation Case Tracking System (SPLIT) and Associated Headquarters Files (NLRB–27)—information relating to investigative subpoena enforcement cases, injunction and mandamus actions regarding Agency cases under investigation, bankruptcy case information in matters under investigation, Freedom of Information Act cases involving investigatory records, certain requests that the Board initiate litigation or intervene in non-Agency litigation, and any other investigatory material compiled for law enforcement purposes; and

(4) The Freedom of Information Act Tracking System (FTS) and Associated Agency Files (NLRB–32)—information requested under the Freedom of Information Act, 5 U.S.C. 552, that relates to the Agency's investigation of unfair labor practice and representation cases or other proceedings described in paragraphs (m)(1) through (3) of this section.

(n) The reasons for exemption under 5 U.S.C. 552a(k)(2) are as follows:

(1) 5 U.S.C. 552a(c)(3) requires an agency to make the accounting of each disclosure of records available to the individual named in the record at such individual's request. These accountings must state the date, nature, and purpose of each disclosure of a record, and the name and address of the recipient. Providing such an accounting of investigatory information to a party in an unfair labor practice or representation matter under investigation could inform that individual of the precise scope of an Agency investigation, or the existence or scope of another law enforcement investigation. Accordingly, this Privacy Act requirement could seriously impede or compromise either the Agency's investigation, or another law enforcement investigation, by causing the improper influencing of witnesses, retaliation against witnesses, destruction of evidence, or fabrication of testimony.

(2) 5 U.S.C. 552a(d) requires an agency to permit an individual to gain access to records pertaining to such individual, to request amendment to such records, to request review of an agency decision not to amend such records, and, where the Agency refuses to amend records, to submit a statement of disagreement to be included with the records. Such disclosure of investigatory information could seriously impede or compromise the Agency's investigation by revealing the identity of confidential sources or confidential business information, or causing the improper influencing of witnesses, retaliation against witnesses, destruction of evidence, fabrication of testimony, or unwarranted invasion of the privacy of others. Amendment of the records could interfere with ongoing law enforcement proceedings and impose an undue administrative burden by requiring investigations to be continuously reinvestigated.

(3) 5 U.S.C. 552a(e)(1) requires an agency to maintain in its records only such information about an individual as is relevant and necessary to accomplish a purpose of the agency required by statute or by executive order of the President. This requirement could foreclose investigators from acquiring or receiving information the relevance and necessity of which is not readily apparent and could only be ascertained after a complete review and evaluation of all the evidence.

(4) 5 U.S.C. 552a(e)(4)(G) and (H) require an agency to publish a **Federal Register** notice concerning its procedures for notifying an individual, at the individual's request, if the system of records contains a record pertaining to the individual, for gaining access to such a record, and for contesting its content. Because certain information from these systems of records is exempt from subsection (d) of the Act concerning access to records, and consequently, from subsection (f) of the Act concerning Agency rules governing access, these requirements are inapplicable to that information.

(5) 5 U.S.C. 552a(e)(4)(I) requires an agency to publish a **Federal Register** notice concerning the categories of sources of records in the system of records. Exemption from this provision is necessary to protect the confidentiality of sources of information, to protect against the disclosure of investigative techniques and procedures, to avoid threats or reprisals against informers by subjects of investigations, and to protect against informers refusing to give full information to investigators for fear of having their identities as sources revealed.

(6) 5 U.S.C. 552a(f) requires an agency to promulgate rules for notifying individuals of Privacy Act rights granted by subsection (d) of the Act concerning access and amendment of records. Because certain information from these systems is exempt from subsection (d) of the Act, the requirements of subsection (f) of the Act are inapplicable to that information.

Dated: Washington, DC, November 15, 2006.

By direction of the Board.

Lester A. Heltzer,

Executive Secretary.

[FR Doc. 06–9682 Filed 12–12–06; 8:45 am]

BILLING CODE 7545–01–P

ENVIRONMENTAL PROTECTION AGENCY

40 CFR Part 69

[Docket No. EPA–R02–OAR–2005–VI–0001, FRL–8254–6]

Clean Air Act Section 325 Exemption for Virgin Islands Water and Power Authority

AGENCY: Environmental Protection Agency.

ACTION: Proposed Grant of Petition under section 325 of the Clean Air Act.

SUMMARY: The Environmental Protection Agency is proposing to grant, with conditions, a Petition, from the Governor of the Virgin Islands, submitted under section 325 of the Clean Air Act (CAA). The Petition requests that EPA exempt the Virgin Islands Water and Power Authority (VIWAPA) from its obligation to comply with the continuous emission monitoring system (CEMS) conditions contained in Prevention of Significant Deterioration (PSD) permits issued pursuant to section 165 of the CAA to VIWAPA for nine PSD permitted units

located on St. Thomas and St. Croix at two of its facilities.

This approval will exempt VIWAPA from its obligation to comply for a period of five (5) years with the PSD permit CEMS conditions at seven of its eight PSD permitted combustion turbines and at its two PSD permitted Heat Recovery Steam Generator (HRSG) units. These PSD permit CEMS conditions address monitoring of Nitrogen Oxides (NO_X), Carbon Monoxide (CO) and opacity emissions. Additionally, VIWAPA sought to extend the Petitioner's request to include waiver of PSD permit CEMS conditions for a new unit, Unit 23. While this approval will not exempt VIWAPA from the CEMS obligations for Unit 23, it does provide VIWAPA additional time to comply with the CEMS permit conditions.

This approval may be revoked or modified if significant changes in circumstances occur at either one or both of the two VIWAPA facilities. Failure to comply with the conditions included in this approval at Section VII (Conditions of Approval), hereinafter called ''Conditions,'' could result in the approval of the exemption being revoked by the Administrator as well as civil and/or criminal enforcement action under the Clean Air Act.

DATES: Comments must be received on or before January 12, 2007.

ADDRESSES: Submit your comments, identified by Docket ID No. EPA–R02–OAR–2005–VI–0001, by one of the following methods:

- *http://www.regulations.gov:* Follow the on-line instructions for submitting comments.
- *E-mail: Eng.Ken@epa.gov.*
- *Fax:* 212–637–3998.
- *Mail:* Kenneth Eng, Chief, Air Compliance Branch, Environmental Protection Agency, Region 2 Office, 290 Broadway, 21st Floor, New York, New York 10007–1866.
- *Hand Delivery:* Kenneth Eng, Chief, Air Compliance Branch, Environmental Protection Agency, Region 2 Office, 290 Broadway, 21st Floor, New York, New York 10007–1866. Such deliveries are only accepted during the Regional Office's normal hours of operation. The Regional Office's official hours of business are Monday through Friday, 8:30 a.m. to 4:30 p.m. excluding Federal holidays

Instructions: Direct your comments to Docket ID No. EPA–R02–OAR–2005–VI–0001. EPA's policy is that all comments received will be included in the public docket without change and may be made available online at *http://www.regulations.gov*, including any personal information provided, unless the comment includes information claimed to be Confidential Business Information (CBI) or other information whose disclosure is restricted by statute. Do not submit information that you consider to be CBI or otherwise protected through *http:.www.regulations.gov* or e-mail. The *http://www.regulations.gov* Web site is an ''anonymous access'' system, which means EPA will not know your identity or contact information unless you provide it in the body of your comment. If you send an e-mail comment directly to EPA without going through *www.regulations.gov* your e-mail address will be automatically captured and included as part of the comment that is placed in the public docket and made available on the Internet. If you submit an electronic comment, EPA recommends that you include your name and other contact information in the body of your comment and with any disk or CD–ROM you submit. If EPA cannot read your comment due to technical difficulties and cannot contact you for clarification, EPA may not be able to consider your comment. Electronic files should avoid the use of special characters, any form of encryption, and be free of any defects or viruses. For additional information about EPA's public docket visit the EPA Docket Center homepage at *http://www.epa.gov/epahome/dockets.htm.*

Copies of the Governor's Petition, additional submittals relied upon in evaluating this Petition, and the Technical Support Document explaining the Environmental Protection Agency's rationale are available on line at *http://www.regulations.gov* in docket EPA–R02–OAR–2005–VI–0001 and at the following address for inspection during normal business hours: Environmental Protection Agency, Region 2 Office, Air Compliance Branch, 290 Broadway, 21st Floor, New York, New York 10007–1866, Attn: Gaetano LaVigna, (212) 637–4069.

FOR FURTHER INFORMATION CONTACT: Gaetano LaVigna, Air Compliance Branch, Environmental Protection Agency, Region 2 Office, 290 Broadway, 21st Floor, New York, New York 10007–1866, (212) 637–4069 or at *LaVigna.Gaetano@epa.gov.*

SUPPLEMENTARY INFORMATION: The following table of contents describes the format for the Supplementary Information section:

I. What Action is the Environmental Protection Agency (EPA) Taking Today?
II. What are the Regulatory Requirements for Authorizing an Exemption under the Clean Air Act?
III. What are the Bases for the Petitioner's Request and what is EPA's Analysis of the Petition?
IV. What are Grounds for Revocation of the Exemption?
V. What is EPA's Conclusion?
VI. What is the Effective Date of the Approval of Petition and Timing of the Requirements?
VII. What are the Conditions of Approval?
VIII. Statutory and Executive Order Review

I. What Action is the Environmental Protection Agency (EPA) Taking Today?

EPA is proposing a five (5) year approval, with Conditions, of the Governor of the Virgin Islands' March 7, 2002 Clean Air Act (CAA) section 325 Petition (''Petition''). On behalf of the Virgin Islands Water and Power Authority (VIWAPA or ''the Authority''), the Governor of the Virgin Islands requested that the Authority be exempted from continuous emission monitoring system (CEMS) conditions, which are contained in Prevention of Significant Deterioration (PSD) permits issued to VIWAPA pursuant to section 165 of the CAA. If finally approved, this exemption will become effective for a period of five (5) years from the date of final publication.

For the effective period of the exemption, VIWAPA will not be required to comply with the CEMS conditions in its PSD permits for seven of its PSD permitted combustion turbines and its two PSD permitted Heat Recovery Steam Generating (HRSG) units. EPA is not granting the Petition with respect to the newly permitted eighth combustion turbine, Unit 23. However, the exemption provides VIWAPA additional time to comply with the CEMS conditions in its PSD permit for Unit 23, as delineated in the Conditions provided in Section VII. The PSD permit CEMS conditions relate to monitoring of NO_X, CO and opacity emissions. All of the units subject to this proposed approval are located at VIWAPA's two facilities in St. Thomas and St. Croix. Failure to comply with the Conditions could result in the exemption being revoked by the Administrator as well as civil and/or criminal enforcement action under the CAA.

The Petitioner's request, supporting documents submitted and presentations given by VIWAPA are summarized in this notice and detailed in a Technical Support Document available from EPA at the addresses listed above.

II. What are the Regulatory Requirements for Authorizing an Exemption Under the CAA?

Section 325(a) of the CAA authorizes the Administrator of EPA, upon a Governor's petition, to exempt any person or source or class of persons or sources in the U.S. Virgin Islands, Guam, American Samoa, or the Commonwealth of the Northern Mariana Islands from CAA requirements other than section 112 or any requirements of section 110 or part D of subchapter I of the CAA necessary to attain or maintain a national primary ambient air quality standard (NAAQS). EPA may grant a petition for exemption if the Administrator finds that compliance with such a requirement is not feasible or is unreasonable due to unique geographical, meteorological, or economic factors of such territory, or other local factors that the Administrator deems significant. The CAA further provides that any such petition shall be considered in accordance with section 7607(d) of the Act and any exemption granted shall be considered final action by the Administrator for the purposes of section 7607(b) of the CAA.

Further, EPA is required to notify the Committees on Energy and Commerce and on Natural Resources of the House of Representatives and the Committees on Environment and Public Works and on Energy and Natural Resources of the Senate upon receipt of a petition under section 325(a) of the CAA and upon approval or rejection of a petition under section 325(a). EPA notified the appropriate committees and will also notify them upon final action on this Petition.

III. What are the Bases for the Petitioner's Request and What Is EPA's Analysis of the Petition?

The Governor in his Petition and VIWAPA in support of the Petition seek a CAA section 325 exemption from its PSD permit CEMS conditions because, they argue, compliance with these conditions is not feasible or reasonable due to unique geographical, meteorological, economic and other local factors in the Virgin Islands. The Petition and VIWAPA provide a number of arguments in support of an approval of an exemption. EPA analyzed each basis for the Petitioner's and VIWAPA's request as follows:

A. Attainment and Maintenance of National Ambient Air Quality Standards

Pursuant to section 325 of the Act, the Administrator is not authorized to exempt a source from requirements under CAA section 110 or part D of subchapter I of the Act necessary to attain or maintain a national primary ambient air quality standard (NAAQS). Therefore, whether the requested exemptions will result in nonattainment of a NAAQS is a threshold requirement for consideration of this, and any other, CAA section 325 petition. This threshold requirement was addressed in the Petition and in subsequent information provided by VIWAPA.

Because EPA had obtained modeling data from another facility suggesting that the Island of St. Croix may be close to exceeding the NAAQS for NO_X, EPA requested and reviewed new NO_X modeling data submitted by VIWAPA. EPA sought to determine whether the Air Quality Control Regions of both St. Croix and St. Thomas as well as the Class I area of St. John would still be in attainment if EPA were to approve the Petition for exemption. One of VIWAPA's PSD permits requires that the nitrogen content of the fuel oil be no greater than 150 ppm. VIWAPA's exclusive fuel oil supplier indicated that it can no longer supply VIWAPA fuel oil with a nitrogen content specified in the PSD permit. VIWAPA's supplier will only guarantee fuel oil with a nitrogen content of no more than 1,000 ppm. Therefore, VIWAPA submitted air modeling of the potential emissions from combustion of fuel with a nitrogen content of up to 1,000 ppm. The modeling demonstrates that properly controlled use of fuel oil with a nitrogen content of 1,000 ppm at VIWAPA's two facilities will not cause an exceedance of the NAAQS. The modeling demonstrates that VIWAPA has met this threshold requirement for consideration of the Petition.

B. Statutory and Regulatory Authority for Requiring CEMS

The Petitioner contends that there is no statutory or regulatory requirement that mandates the use of CEMS. However, the units in question are subject to PSD. In PSD permits, like the ones issued to VIWAPA, EPA routinely requires the use of CEMS to directly and continuously measure emissions as a means of determining compliance with PSD Best Available Control Technology (BACT) limits. In the VIWAPA permits, EPA established BACT limits for NO_X and CO and set limits for opacity and required CEMS to ensure compliance with these limits. EPA's 1990 Draft New Source Review Workshop Manual indicates that continuous and quantitative measurements be obtained where feasible; if not, surrogate parameters must be expressed in the permit. EPA has consistently applied this policy in its issuance of PSD permits.

In reviewing VIWAPA's PSD applications for its PSD affected units, EPA determined that VIWAPA had not demonstrated that continuous, quantitative measurements are infeasible, therefore all of VIWAPA's PSD permits include CEMS requirements to ensure that VIWAPA continually meets the BACT limits established in its PSD permits.

C. Unique Geographical Location as it Relates to Difficulties in Obtaining and Retaining CEMS Operators and Contractors

The Petitioner and VIWAPA indicate that because VIWAPA is located approximately 1,100 miles from the mainland of the United States, the Authority has had significant difficulties hiring full-time qualified technical and engineering personnel to maintain and service CEMS at the VIWAPA facilities. In addition they indicate that when necessary, the Authority had been unable to timely obtain contractor assistance due to difficulties in contractors obtaining flights. Furthermore, the Petitioner and VIWAPA assert that there are no locally available vendors that can provide hardware and/or software service. In addition, the Petitioner and VIWAPA indicated that off-Island contractors are not always available for the extra two (2) days needed to travel to and from the Virgin Islands.

EPA investigated the Petitioner's and VIWAPA's assertions, and has determined that while some of VIWAPA's difficulties are attributable to its location, its difficulties with contractors are more likely attributable to other issues discussed in later sections. In addition, even sources on the mainland are located in areas which are difficult to get to within a day. Thus, while EPA recognizes that the travel distance presents some support for the exemption, it would not, on its own, be a sufficient basis for approval of the exemption.

D. VIWAPA's Financial Condition as it Relates to Difficulties in Obtaining and Retaining CEMS Operators and Contractors

Documents provided by VIWAPA show that it often cannot pay its contractors on a timely basis. The Virgin Islands Government frequently delays payments to VIWAPA which, in turn, delays payments to its contractors. This leads to difficulties in retaining contractors, resulting in poorly maintained equipment. EPA recognizes

that VIWAPA's financial circumstances create difficulties in obtaining and retaining CEMS expertise. EPA has determined that these difficulties warrant a five (5) year approval of the Petition, with the Conditions specified in Section VII.

E. Summary of Difficulties in Obtaining and Retaining Expertise To Manage and Maintain Old CEMS

VIWAPA identified numerous difficulties in obtaining and retaining qualified technical and engineering personnel and contractors to maintain and service its CEMS and related data acquisition software. VIWAPA's CEMS vendor indicated to EPA that it is no longer providing hardware and software services for VIWAPA's old CEMS because its staff is no longer trained in supporting systems that are as old as the ones in place at VIWAPA. VIWAPA has told EPA that it does not have trained in-house personnel to manage and maintain these systems, and has indicated that there are no local vendors available to provide such hardware and software service, and there exists no alternatives for VIWAPA to keep these old CEMS-related equipment operating. Based upon VIWAPA's representations as well as our discussions with VIWAPA's CEM's vendor, EPA agrees that VIWAPA is likely to experience continued difficulties in obtaining and retaining expertise to manage and maintain the current antiquated CEMS.

F. Other Relevant Financial Considerations

The Petitioner stated that VIWAPA's ''scarce resources should not be wasted on unnecessary and unreliable monitoring.'' EPA does not agree that such monitoring is unnecessary and unreliable. Monitoring is a necessary tool for determining compliance with the PSD permit emission limits. VIWAPA also contends that the CEMS replacement alone will cost between $900,000 and $1,600,000. EPA hired a financial analyst to review VIWAPA's financial statements, annual budgets and other documents submitted in support of the Petition's position on financial considerations. The analyst determined that the cost of installation, operation and maintenance of the PSD-required CEMS is financially feasible. EPA also researched the costs of replacement and determined them unlikely to be as high as VIWAPA stated.

G. Current Condition of PSD Permit-Required CEMS and Supporting Software

The Petitioner and VIWAPA stated that the monitors and data acquisition system (DAS), which are installed on all but the newly permitted and constructed Unit 23, have reached the end of their useful lives. The NO_X, CO and old opacity CEMS have been unable to meet the minimum monitor availability requirements and the monitors themselves have not been functioning properly, in part, because of excessive stack flexing and vibration resulting in improper alignment, etc. EPA's position is that CEMS replacement is expected during the life of a combustion turbine, as is servicing and repair of CEMS in order to comply with PSD permit CEMS conditions. EPA has decided that during the period of the exemption, VIWAPA shall make necessary improvements to its gas turbines and their associated stacks, to address the problems that adversely impacted on the operation of the CEMS at the PSD-permitted units. Addressing the problems and improving the alternative monitoring system (AMS) will facilitate better operation and maintenance of new generation CEMS that will be installed in the future.

H. Attempts To Replace PSD Permit-Required CEMS

Prior to the Governor's submission of the Petition, VIWAPA sent out an RFP for purchase, installation and support of new CEMS. Vendors responding to the RFP indicated that they could not fully accept the terms specified in the RFP. Upon reviewing the RFP, EPA found that the RFP required not only that a vendor install, operate and maintain the CEMS in compliance with the PSD permits, but also that the vendor bear the liability of any civil penalties resulting from noncompliance with the PSD permits. EPA determined that this was an unreasonable requirement to place in the RFP and that it created a barrier to engaging a CEMS replacement contractor. The Agency also has determined that commercially available CEMS are far more reliable and easier to operate than the monitors and data acquisition systems that VIWAPA currently operates; therefore, VIWAPA should be able to operate these systems with relatively fewer difficulties. EPA concluded that a permanent exemption from the CEMS conditions is not warranted based on VIWAPA's prior contracting experience with vendors. However, as stated in section III(G), above, a five (5) year exemption will provide sufficient time for VIWAPA to improve its facilities and, in particular, its turbines, so that they can effectively use new monitors and data acquisition systems.

I. Proposed Alternative Monitoring

The Petitioner and VIWAPA propose using an alternative monitoring system (AMS) in lieu of compliance with the PSD permit-required CEMS. EPA determined that using the AMS system instead of CEMS for monitoring NO_X emissions is acceptable for a five (5) year period provided VIWAPA monitors its compliance by conducting visible emission readings, performing stack testing and using the portable analyzers. The AMS would compare the actual water and/or steam injection rates with the injection rates established through the permit-required stack testing as well as the stack testing conditions in this proposed exemption. The AMS includes an alarm system to alert operating personnel trained to respond whenever operating levels approach or exceed permit limits. This exemption conditions the use of the proposed AMS on specific improvements to include recording the hours of operation, turbine operation load, compliance parameters, and minimum data availability requirements. The exemption also includes additional conditions on reporting and recordkeeping to alleviate any ambiguity as to required submissions and the schedule for such submissions.

The Agency is proposing additional periodic monitoring conditions, including the use of portable analyzers to measure CO, O_2 and NO_X emissions from the stacks. In addition, the Agency also has determined that the exemption will require annual stack tests, as discussed in the Governor's petition. During stack testing, VIWAPA shall establish additional parameters that correlate with compliance and VIWAPA shall add these parameters to its automated AMS. Properly operated, an improved AMS should provide necessary compliance information during the five (5) year period of the exemption and provide a foundation for determining compliance with the PSD limits after the exemption terminates. VIWAPA may choose to terminate the AMS upon implementing CEMS in compliance with Section 165 PSD permit requirements, this may occur prior to but not later than the end of the five (5) year period of the exemption.

J. Fuel Supply Changes

As stated earlier, VIWAPA indicated that its fuel supplier is currently able to guarantee fuel oil with no greater than 1,000 ppm nitrogen, rather than fuel oil

with 150 ppm nitrogen-in-fuel content used to establish the BACT limits in all of VIWAPA's PSD permits other than Unit 23. While EPA has reviewed and analyzed modeling and other information that VIWAPA provided in support of the Governor's Petition regarding VIWAPA's use of fuel oil with greater than 150 ppm nitrogen content, the Agency is not approving such a fuel change in this exemption. Action on the section 325 Petition is not the appropriate forum for EPA approval of PSD permit modification requests. VIWAPA has recently submitted an application to revise its PSD permits to reflect the higher nitrogen fuel that is presently being combusted. The Agency is currently evaluating this application.

K. Status of Recently Installed Opacity CEMS

VIWAPA argues that, due to geographic and financial difficulties, it is currently unable to obtain appropriate contractor support for a CEMS data acquisition system necessary to collect CEMS data including data relating to opacity monitoring. EPA includes visible emission (VE) reading requirements in this exemption in lieu of operating the Opacity CEMS. The Agency determined that for the duration of the approval, VIWAPA should be exempted from its obligation to comply with PSD conditions relating to opacity CEMS in part because the Agency recognized that it would take time to improve the physical condition of the older existing gas turbines and their associated stacks (e.g., reduce excessive stack vibration, stack flexing, and maintain proper alignment, etc.), which adversely affects the performance of the opacity monitors. The temporary exemption allows VIWAPA time to improve the condition of the older existing turbines so that they will not contribute to poor performance of new opacity CEMS.

L. VIWAPA's Request for Consideration of Exemption From Obligation To Comply With Unit 23 PSD Permit CEMS Conditions

Although the Governor submitted the Petition prior to the construction of Unit 23, VIWAPA claims that the request for an exemption from CEMS requirements was non-specific and applies to all of its PSD permitted units. Representatives of the Governor's office and VIWAPA have repeatedly asserted in subsequent meetings and correspondence with EPA that the Petition also applies to Unit 23. Accordingly, EPA reviewed information provided by VIWAPA relating to the possibility of exempting the Authority from compliance with CEMS conditions in Unit 23's PSD permit.

The Agency is not convinced that an exemption of Unit 23 CEMS is justified. Current generation CEMS and DAS are much easier to operate and maintain than those currently in place at VIWAPA's other units. Since Unit 23 is new, it does not suffer from the various operational problems of the older turbines and its condition will not have a negative impact on the operation of CEMS. Moreover, EPA has determined that by operating CEMS at Unit 23, VIWAPA will gain the knowledge and experience that will assist it in phasing in CEMS installation and operation at all its units. However, although EPA is not exempting Unit 23 from the CEMS requirements, the exemption provides VIWAPA additional time to fully comply with the CEMS installation and operation requirements in its PSD permit for Unit 23. The Conditions pertaining to Unit 23 are delineated in section VII, entitled ''Conditions of Approval.''

IV. What are Grounds for Revocation of the Exemption?

This approval may be revoked or modified in whole or in part, by the Administrator, if significant changes in circumstances at the facility occur, if significant violations of the exemption occur, or if significant changes in the factual circumstances upon which the approval is based occur. These changes include, but are not limited to, changes in commitments and modeling information made in the Petition or in support of the Petition, changes at the facility or in the status of the Air Quality Control Region, changes in financial status, and changes in ownership (including privatization—in whole or in part) that could have an impact upon the facilities' finances or ability to hire and retain technical and engineering personnel.

Significant violations also include, but are not be limited to, failures to meet any and all conditions of this exemption, such as stack testing, periodic monitoring, improvement of the AMS and water injection system, and failures to adhere to established compliance parameters. The exemption requires VIWAPA to bring any such changes to the attention of the Agency for review as soon as practicable.

In addition to revocation and/or modification, failure to comply with the Conditions could result in civil and/or criminal enforcement action under the CAA.

V. What is EPA's Conclusion?

Based on EPA's review of the Petition, information and presentations provided in support of this Petition, EPA has determined that VIWAPA's unique geographical location and financial circumstances have caused it difficulties in operating existing CEMS at its older turbines and difficulties in obtaining and retaining contractors and staff with expertise to operate and maintain the CEMS. EPA is, therefore, proposing to approve, with Conditions specified in Section VII, the Governor's Petition for exemption for a period of five (5) years. The approval will exempt VIWAPA from its obligation to comply with the PSD permit CEMS conditions at seven of its eight PSD permitted combustion turbines and at its two PSD permitted HRSG units. These PSD permit CEMS conditions address monitoring of NO_X, CO and opacity emissions. During the five (5) year period of the exemption, VIWAPA is required, in accordance with good air pollution control practice, to make improvements to its facilities, including but not limited to the turbines, necessary to ensure proper operation of new generation CEMS upon termination of this exemption. Additionally, the Administrator is providing, in this notice, a set period of time for VIWAPA to comply with its PSD permit CEMS requirements for Unit 23, as delineated in the Conditions. During the period of this exemption, it is EPA's expectation that VIWAPA's staff will gain the necessary experience to properly operate and maintain such equipment at Unit 23, and then apply this knowledge to the operation of CEMS at the rest of their units upon termination, if not earlier, of this exemption.

In summary, the Conditions require: (a) Improvements to VIWAPA's AMS and water injection system; (b) initial and periodic (annual) stack tests, (c) ongoing portable analyzer monitoring, (d) visible emissions readings, (e) record keeping and reporting, and (f) planning for and installation of new CEMS.

One of the reasons for EPA's inclusion of Conditions to the exemption relating to stack testing and portable analyzer monitoring in conjunction with AMS and water injection system improvement is to ensure the creation and maintenance of operating parameters which accurately correlate with VIWAPA's operating conditions at the time of opacity, NO_X and CO limit compliance demonstrations made during compliance tests conducted in accordance with the New Source Performance Standards, PSD and this exemption.

VI. What is the Effective Date of the Approval of Petition and Timing of the Requirements?

The effective date of the approval is the date of final publication of the EPA exemption in the **Federal Register**. The exemption will be in effect for a period of five (5) years from such date. Under the proposed exemption, VIWAPA will be allowed to discontinue operation of its CEMS at all of the PSD affected units, except for Unit 23, which is being provided a limited time to achieve permanent, consistent compliance with its PSD permit CEMS conditions, as delineated in section VII, below.

Once VIWAPA complies with conditions 2, 3, 4, 6, 7, 8, 9, 10, 11 and 23, operation of CEMS at PSD permitted units other than Unit 23 can be discontinued. VIWAPA shall submit Monthly Status Reports delineating its progress in complying with these Conditions. Once VIWAPA has complied with the above conditions, VIWAPA shall submit Quarterly Reports as directed in the Conditions.

VII. What are the Conditions of Approval?

Conditions of Approval

All of the units affected by this exemption, with the exception of Unit 23, are subject to conditions 1–32, and conditions 36 and 37 below. The Unit 23 conditions are separately specified. Condition 38 applies to all units. The Conditions are to be in effect for a period of no more than five (5) years from the effective date of the approval.

VIWAPA shall conduct initial stack testing, prior to the discontinuation of the CEMS operation, to establish the water and fuel injection rates as well as to establish additional compliance monitoring parameters and their associated compliance values. VIWAPA shall monitor all of these parameters using its alternate monitoring system. Any necessary changes to accommodate monitoring of these parameters shall be in place prior to discontinuation of the CEMS operation. In addition, a number of Conditions require other methods of monitoring in lieu of the CEMS operation. These monitoring measures shall be available and in place prior to discontinuation of the CEMS operation. For example, the exemption requires VIWAPA to purchase portable analyzers as well as to submit for EPA approval a sampling protocol for use of the portable analyzers. In addition, the exemption requires VIWAPA to have certified visible emissions readers available on staff to conduct required visible emissions readings. Furthermore, the exemption requires VIWAPA to complete a third-party audit of the water injection system to identify any problems associated with the operation of the system and to correct these problems. Proper operation of the water injection system is critical because it is the only form of control of NO_X emissions from the affected units.

Once VIWAPA has complied with conditions 2, 3, 4, 6, 7, 8, 9, 10, 11, and 23, the operation of the CEMS at PSD permitted units other than Unit 23 can be discontinued. VIWAPA shall submit Monthly Status Reports delineating its progress in complying with these specific conditions until the specific conditions have been adequately addressed. Thereafter, VIWAPA shall submit Quarterly Reports on ongoing compliance with these conditions.

Heat Recovery Steam Generator (HRSG) Stack Damper

1. VIWAPA shall demonstrate that, prior to required stack testing, during simple cycle operation, no air flow goes to the HRSG. Provisions for making this demonstration shall be included in the stack test protocol submitted for performance testing. This is necessary to show that all emissions are correctly recorded by the CEMS when the monitors are reinstalled. In addition, VIWAPA has agreed and the exemption requires the elimination of the capability of firing fuel in the HRSG unit for turbines 15 and 18. VIWAPA shall eliminate the capability of firing fuel in the HRSG unit for turbines 15 and 18. Within one hundred twenty (120) days of the approval of the exemption, VIWAPA shall provide to EPA a certification signed by a corporate representative indicating that the capability to fire fuel in the HRSG for turbines 15 and 18 has been eliminated.

Stack Testing

2. VIWAPA shall plan, conduct, and report upon stack emission tests to be conducted at each PSD permitted gas turbine. VIWAPA shall conduct stack tests initially within thirty (30) days of EPA protocol approval. VIWAPA shall complete no later than one hundred eighty (180) days from publication of the final approval of the Petition, and shall repeat stack testing every twelve (12) months thereafter. VIWAPA shall provide EPA at least two (2) weeks notice prior to the date proposed for conducting stack tests.

3. VIWAPA shall submit stack testing protocols covering all testing scenarios and all parameters to be tested and measured (including load, fuel bound nitrogen, and all AMS parameters, including but not limited to water/steam and fuel rates) to EPA for review, revision and approval at least sixty (60) days before each stack test. VIWAPA may, at its option, submit a separate protocol for each test or combined protocols covering more than one unit. If combined protocols are submitted, VIWAPA shall submit for each unit, separate sections, figures, and/or tables clearly indicating the specific unit, load, fuel, AMS, stack and sampling configurations and all other unit-specific information. VIWAPA shall conduct stack tests for each PSD permitted gas turbine during at least the four loads required by NSPS Subpart GG, or more, as specified in VIWAPA's current PSD permit. VIWAPA shall include in the stack testing protocols, provisions for verifying that all flow from units connected to the HRSG passes through the turbine stack in simple cycle mode.

4. VIWAPA shall conduct stack tests to determine compliance with PSD NO_X, and CO emissions limits, and opacity limits as well as to establish and then assure maintenance of AMS compliance parameters, which shall be utilized to ensure Federal enforceability. VIWAPA's Title V permits also require these tests as well as stack tests for VOC, PM and PM_{10}.

5. VIWAPA shall determine the nitrogen content of fuel combusted during stack testing using any of the following ASTM Test Methods: D2597–94 (reapproved 1994), D6366–99, D4629–02, or D5762–02.

6. VIWAPA shall recalibrate the water injection system before each stack test. VIWAPA shall establish new compliance parameter values including but not limited to water-to-fuel ratios after each stack test. Periods in which compliance parameters are exceeded shall be considered violations of the NO_X limit.

Periodic Monitoring

7. VIWAPA shall purchase two (2) Portable Flue Gas Emission Analyzers, one each for its St. Thomas and St. Croix facilities. In addition to these analyzers, VIWAPA shall purchase all appropriate calibration and operational equipment and supplies, and thereafter shall maintain a sufficient inventory of such on each island. VIWAPA shall calibrate and operate the instruments in accordance with the manufacturer's instructions. VIWAPA shall monitor every week for NO_X, CO, O_2 and SO_2 emissions from the stack of each PSD affected gas turbine ''available to operate'' (excluding units that are ''down for service'') and that operate a minimum of five (5) hours per week. VIWAPA shall sample the nitrogen content of the fuel combusted at the

time of portable analyzer monitoring. VIWAPA shall submit a sampling protocol which includes a monitoring period it believes acceptable for determining compliance. This protocol is subject to EPA review, revision and approval. Should any concentrations measured by the portable analyzer be in excess of the emission limits in the applicable permit, VIWAPA shall make any adjustments necessary to the affected unit to return it to compliance with the emission limit. Within two (2) days of making any necessary adjustments, VIWAPA shall re-monitor the affected unit, in accordance with the protocol, to demonstrate compliance with the emission limit. VIWAPA shall continue this process until VIWAPA achieves compliance with each PSD-permit emission limit.

After VIWAPA demonstrates continual compliance with the emission standards using the portable analyzer for a period of six (6) months, VIWAPA shall reduce the initial frequency of monitoring to biweekly (once every two (2) weeks). VIWAPA shall further reduce the subsequent frequency of monitoring to monthly after a demonstration of continual compliance of the emission standards using the portable analyzer for a period of six (6) months. VIWAPA shall not reduce the frequency of the periodic monitoring using the portable analyzer any further than once every month. VIWAPA shall revert back to the prior frequency of periodic monitoring if two (2) consecutive measurements with the portable analyzer indicate noncompliance with the emission limit.

During periods that the PSD affected gas turbines operate less than five (5) hours per week, the exemption allows VIWAPA to forgo the required portable analyzer monitoring for that weekly period. Where VIWAPA has not operated a unit for a two-week period and such unit begins operation greater than five (5) hours per week, VIWAPA shall conduct the monitoring with the portable analyzer within two (2) days of the day in which the unit had been operated for more than five (5) hours that week. If VIWAPA does not operate a unit or operates a unit for less than five (5) hours per week, VIWAPA shall monitor such a unit at a lower frequency of no less than once every two (2) months. A unit shall be considered to be operating when fuel is being combusted regardless of the capacity at which it is burning the fuel.

VIWAPA shall submit copies of all data relating to the periodic sampling and shall be submitted with VIWAPA's quarterly reports. During periods when stack tests are performed, VIWAPA shall use the portable flue gas emission analyzer for correlation purposes to verify accuracy. VIWAPA shall submit for EPA approval its selection of the portable flue gas analyzer it proposes to use for the periodic sampling. (Examples of such portable devices include but are not limited to Lancom III by Land Instrument, Enerac 3000 by Energy Efficiency Systems and PEM 9002 by Teledyne Analytical Instruments.) This list of examples is not an EPA pre-endorsement of any of these devices.

All exceedances of the NO_X emission limits measured by the portable analyzer for the sampling period determined through the EPA approved sampling protocol shall be considered violations of the emissions standards.

Improving the Alternative Monitoring System (AMS)

8. VIWAPA shall monitor the water injection rates and the established compliance parameters.

9. VIWAPA shall ensure that the AMS be completely automated and that mechanisms or safeguards are implemented to ensure that the raw data cannot be altered.

10. VIWAPA shall design a data logging system to function and continue to function at all times, including but not limited to instances when the water injection system is switched from automatic operation to manual operation, when water injection pumps are switched, when the water injection system trips and when sensors malfunction.

11. VIWAPA shall ensure that the AMS record the specific hours of operation and operating load of each turbine.

12. VIWAPA shall keep a log that indicates any instances in which a compliance parameter is exceeded, the reasons for the exceedance, and the corrective action(s) taken (Compliance Parameter Log).

13. VIWAPA shall keep logs of all parameters manually which include the reasons for system failure and corrective measures when the AMS system is unable to log data.

14. VIWAPA shall test alarms weekly to ensure proper operation.

15. VIWAPA shall ensure that the AMS monitoring system maintains a data availability of 95% per quarter over all of the hours of the quarter. VIWAPA shall ensure that the AMS monitoring system, in conjunction with the manual logging during any period where the AMS is not in operation, maintain a data availability of 98% per quarter over all the hours of the quarter.

Water Injection System

16. Within sixty (60) days of the approval, VIWAPA shall complete a third-party system-wide evaluation of the water injection system of each PSD permitted turbine. VIWAPA shall perform the evaluation to identify and to determine the causes of any system failure, to determine the integrity of the water injection system, to determine why operators continually switch water injection pumps and why some pump switches result in excess emissions being measured at the CEMS and not the AMS.

17. Within sixty (60) days of completion of the third-party system-wide evaluation, VIWAPA shall implement a capital improvement program to replace all damaged and/or deteriorated equipment relating to the water injection systems for all PSD permitted turbines and to correct any equipment, hardware, software, or operational deficiencies revealed during the audits.

18. Within sixty (60) days of completion of the third-party system-wide evaluation, VIWAPA shall ensure that water flow monitors shall be located as close as possible to the turbine injection points to minimize false readings caused by leaks downstream, clogged filters, or unforeseen problems.

19. Within sixty (60) days of the approval, VIWAPA shall install, operate and maintain a feed water pretreatment system to remove minerals that lead to scaling and clogging of the water injection nozzles.

20. Within one hundred twenty (120) days of the approval, VIWAPA shall develop and implement a preventative operation and maintenance plan (including standard operation procedures) to ensure the proper and continual operation of the water injection system. Such a plan shall include, but is not limited to schedules for periodic pump maintenance, replacing filters, identifying and repairing leaks (temporary and permanent), and schedules and procedures for calibrations of water and fuel monitors. VIWAPA shall ensure that good air pollution control practices are utilized at all times during the operation of the water injection system.

21. Within one hundred twenty (120) days of the approval, VIWAPA shall implement a spare parts inventory program at each facility. The spare parts inventory program shall contain an inventory of various replacement parts for routine maintenance. VIWAPA shall maintain lists/logs of the average frequency at which hardware

components are required to be replaced and the dates of replacement of such components. VIWAPA shall assess the minimum quantity of each replacement component that may be maintained based upon evaluation, at the very least, of the lead and the delivery time for procurement and the frequency at which each a component is required to be replaced in the equipment. VIWAPA shall design the spare parts inventory to ensure minimum water injection system downtime in the event of a water injection system failure.

22. VIWAPA shall ensure that at least one technical person or engineer be available on site at its St. Thomas and St. Croix facilities at all times who is trained and experienced in operating and maintaining the water injection system.

Visible Emission Readings

23. VIWAPA shall have a minimum of three (3) EPA Method 9 certified visible emission readers on its staff at its St. Thomas facility and three (3) visible emission readers on its staff at its St. Croix facility. VIWAPA shall ensure that two (2) certified visible emission readers be on-site to conduct two (2) consecutive six-minute Method 9 visible emissions readings in accordance with EPA recognized interpretations of Method 9 for each operating turbine, once during each day of operation. If these observations demonstrate an exceedance of the opacity limits, VIWAPA shall continue to conduct visible emissions observations until the visible emissions readings document that opacity is below the applicable limits.

VIWAPA shall be required to increase the frequency of visible emissions readings to once per eight (8) hour operating shift, during daylight operation, for a period of thirty (30) operating days on a unit where there is a total of thirty (30) minutes or more of visible emissions readings indicating noncompliance with the PSD limit within a twenty four (24) hour period. During this thirty (30) operating day period, if there are a total of eighteen (18) minutes or more of visible emissions readings indicating noncompliance with the PSD limit within a twenty four (24) hour period, the thirty (30) operating day period shall be restarted from that day. Readings taken between each shift must be separated by a minimum of two (2) hours.

Any periods of exceedance shall be considered violations of the opacity limitations in the PSD permit. VIWAPA shall document any periods where it does not conduct the required visible emissions readings, explaining the reason(s) that it did not perform these readings. Any visible emissions readings, conducted by EPA and/or VIDPNR that indicate noncompliance with the PSD limits for the durations specified above, shall also result in VIWAPA's increasing or extending the frequency of required visible emissions readings.

Improving the Physical Condition of the Turbines and Associated Stacks

24. VIWAPA shall take all steps necessary to improve the physical condition of the gas turbines and associated stacks in order to eliminate excessive vibration, stack flexing, improper alignment and any other such problem that adversely affects proper operation of the CEMS. Within sixty (60) days of this approval, VIWAPA shall provide EPA with a plan, including a schedule for repairs and improvements, to ensure that VIWAPA will be able to install and properly operate new CEMS upon termination of the five (5) year exemption. VIWAPA shall implement the submitted plan and schedule after review and approval by EPA.

Reporting and Recordkeeping

25. VIWAPA shall keep on site records of activities conducted pursuant to this exemption shall be kept on site for seven (7) years and shall make these records available to EPA upon request.

26. VIWAPA shall report to EPA any significant or anticipated changes in circumstances as prescribed above at the facility as soon as practicable but no later than 15 days after knowledge of such change. Significant changes in circumstances include, but are not limited to, changes at the facility or in the NAAQS attainment area, changes which could impact upon the maintenance of the NAAQS, changes in financial status, and changes in ownership (including privatization—in whole or in part), which could have an impact upon the facilities' finances or ability to hire and retain technical and engineering personnel.

27. Within sixty (60) days of the completion of stack testing, VIWAPA shall submit stack test reports to EPA covering all tests on all units at its St. Thomas and St. Croix facilities. VIWAPA may, at its option, submit a report for each unit or a single consolidated report, as long as all information for all units is clearly identified and submitted on time. For each test on each unit, the test report(s) shall include:

- Certified true copies of all raw data collected from each part of each test for each parameter measured or observed during and associated with each test, including, for example, all raw data from the emission tests (both field and laboratory), fuel bound nitrogen measurements, all AMS parameter measurements, load measurements, all quality control and/or quality assurance measurements associated with all of the proceeding, etc.
- Summary sheets, showing, for each test, the values determined for each measured pollutant along with the applicable compliance limit,
- Results of all calculations including example calculations for each step,
- All compliance parameters proposed for each operating condition or set of conditions, along with tabulated and/or graphical evidence confirming that those parameter settings would ensure compliance with the emission limitations.

28. Within sixty (60) days of completion of the third-party system-wide evaluation of the water injection systems, VIWAPA shall submit a report that includes a timetable to correct all problems identified as well as the preventative and operations maintenance plan to EPA for review, revision and approval.

29. Within one hundred twenty (120) days of the approval, VIWAPA shall submit documentation to demonstrate that data logging for the AMS is completely automated and that raw data cannot be altered.

30. VIWAPA shall submit Quarterly reports to EPA covering the activities performed in accordance with the monitoring requirements for each calendar quarter and shall postmark these reports by the thirtieth (30th) day following the end of each calendar quarter. VIWAPA shall submit such a report for the first quarter, even if it does not include a full three month period.

31. VIWAPA shall include in Quarterly reports the following information about activities which occurred during the reporting period, for each unit: The AMS, periodic monitoring, visible emissions observations, fuel-bound nitrogen and sulfur content monitoring, and improvements to the physical condition of the gas turbines and associated stacks in accordance with paragraph 24.

- Alternative Monitoring System:

—Copies of the AMS Compliance Parameter Log documenting each measured exceedance of the emission standard, indicating, at least the start and stop times for each exceedance, the hourly average water to fuel ratio during the exceedance period, the established water to fuel compliance ratio for the

period, an explanation of the possible causes of the exceedance, with the number of hours attributed to each cause, the total operating hours for the unit during the quarter, and the corrective action taken.

—Copies of the Incident Log, and the Manual Log for each unit, indicating each time that the AMS became inoperable or performed improperly or was out of service for any reason, including the start and stop time of the outage, the reason determined for the outage, and the corrective action taken.

—Summary Reports for all water-to-fuel exceedances and AMS downtimes for the unit during the quarter, including the total number of exceedance hours and downtime hours, the total number of operating hours in the quarter, and the percent of total operating hours for which there were exceedances or downtimes. A listing of the minimum information required in the summary sheet in the recommended format is attached as Attachment 1.

• Periodic monitoring, visible emissions observations and fuel bound nitrogen and sulfur content monitoring:

—Copies of all data for each monitoring type (periodic, etc.)

—Supplemental information related to exceedances and missed samples or data for each monitoring type, including a listing of each exceedance or missed sample, documentation of the date, time, duration, cause, and corrective action for each.

—Summary sheet for each testing and/or monitoring activity. A listing of the minimum information required in the summary sheet in the recommended format is attached as Attachment 2.

• EPA reserves the right, following review of any Quarterly Report, to require changes in subsequent reporting to facilitate facility response and EPA reviews.

32. In order for EPA to ensure the acceptability of the format of the Quarterly Summary Reports and accompanying detailed excess emission reports, VIWAPA shall submit copies of draft reports to EPA review and approval within one hundred twenty (120) days of the approval of the Petition to: Air and Water QA Team, Monitoring and Assessment Branch, US EPA Region 2, 2890 Woodbridge Ave. Edison, New Jersey 08837.

Unit 23

33. VIWAPA shall install and performance test the CEMS required by the PSD permit for Unit 23 in accordance with its PSD permit conditions, within one hundred eighty (180) days of the effective date of the approval. Failure to do so, within one hundred eighty (180) days of the effective date of this approval, will subject VIWAPA to penalties for non-compliance with its PSD permit.

34. VIWAPA shall be allowed a period, of up to one hundred eighty (180) days after all of the CEMS are performance tested but no greater than one (1) year of the effective date of the approval, to address any training, operation and maintenance issues as they relate to meeting the PSD permit CEMS performance conditions. During this period of time, VIWAPA shall not be penalized for failing to comply with the PSD performance conditions. After this period, VIWAPA shall be subject to penalties for any violations of its PSD permit CEMS conditions.

35. VIWAPA shall submit all reports relating to the CEMS for Unit 23 in accordance with the requirements of its PSD permit.

Future Installation of New CEMS

36. Within one hundred twenty (120) days of the approval, VIWAPA shall submit a detailed plan for securing funding to purchase and install new CEMS at the PSD permitted units. Such a plan shall include a feasibility option for installation of time-share CEMS which could result in a significant reduction in the number of CEMS required and significantly reduce future CEMS purchase, installation and maintenance costs.

37. VIWAPA shall implement the submitted plan to ensure funding, purchase, installation and operation of CEMS at all of the PSD permitted units by no later than the termination date of this exemption.

Enforcement

38. In accordance with the CAA, penalties for violations or multiple violations of operating, emission, monitoring, and recordkeeping requirements may be assessed for periods such as when the AMS system does not automatically log or logs improperly, when the integrity of the data is not ensured, when the water to fuel injection rates are below the established minimum water-to-fuel ratio as monitored by the AMS; when the permitted turbines are operating without water injection; when records are not maintained; and/or when required changes to reporting are not made.

VIII. Statutory and Executive Order Review

A. Executive Order 12866, Regulatory Planning and Review

This action is not a ''significant regulatory action'' under the terms of Executive Order (EO) 12866 (58 FR 51735, October 4, 1993) and is therefore not subject to review under the EO. It involves a temporary exemption from existing regulatory requirements for two sources, requested by a Petition filed by the Governor of the Virgin Islands on behalf of the regulated sources.

B. Paperwork Reduction Act

Under the Paperwork Reduction Act, 44 U.S.C. 3501 *et seq.*, OMB must approve all ''collections of information'' by EPA. The Act defines ''collection of information'' as a requirement for ''answers to * * * identical reporting or record keeping requirements imposed on ten or more persons * * * '' 44 U.S.C. 3502(3)(A). Because the proposed exemption only applies to one company, the Paperwork Reduction Act does not apply.

C. Regulatory Flexibility Act

The Regulatory Flexibility Act (RFA) generally requires an agency to conduct a regulatory flexibility analysis of any rule subject to notice and comment rulemaking requirements under the Administrative Procedure Act or any other statute unless the agency certifies that the rule will not have a significant economic impact on a substantial number of small entities. Small entities include small businesses, small organizations, and small governmental jurisdictions.

For purposes of assessing the impacts of today's rule on small entities, small entity is defined as: (1) A small business as defined by the Small Business Administration's (SBA) regulations at 13 CFR 121.201; (2) a small governmental jurisdiction that is a government of a city, county, town, school district or special district with a population of less than 50,000; and (3) a small organization that is any not-for-profit enterprise which is independently owned and operated and is not dominant in its field.

After considering the economic impact of today's proposed rule on small entities, I certify that this action will not have a significant impact on a substantial number of small entities. The exemption applies to only two source and only postpones compliance with PSD permit conditions for a five (5) year period. We continue to be interested in the potential impacts of the proposed rule on small entities and welcome comments on issues related to such impacts.

D. Unfunded Mandates Reform Act

Under section 202 of the Unfunded Mandates Reform Act of 1995 (''Unfunded Mandates Act''), signed

into law on March 22, 1995, EPA must prepare a budgetary impact statement to accompany any proposed or final rule that includes a Federal mandate that may result in estimated costs to State, local, or tribal governments in the aggregate; or to the private sector, of $100 million or more. Under section 205, EPA must select the most cost-effective and least burdensome alternative that achieves the objectives of the rule and is consistent with statutory requirements. Section 203 requires EPA to establish a plan for informing and advising any small governments that may be significantly or uniquely impacted by the rule.

EPA has determined that the approval action proposed does not include a Federal mandate that may result in estimated costs of $100 million or more to either State, local, or tribal governments in the aggregate, or to the private sector. This Federal action proposes to approve a waiver under Federal law, and imposes no new requirements. Accordingly, no additional costs to State, local, or tribal governments, or to the private sector, result from this action.

E. Executive Order 13132, Federalism

Federalism (64 FR 43255, August 10, 1999) revokes and replaces Executive Orders 12612 (Federalism) and 12875 (Enhancing the Intergovernmental Partnership). Executive Order 13132 requires EPA to develop an accountable process to ensure ''meaningful and timely input by State and local officials in the development of regulatory policies that have federalism implications.'' ''Policies that have federalism implications'' is defined in the Executive Order to include regulations that have ''substantial direct effects on the States, on the relationship between the national government and the States, or on the distribution of power and responsibilities among the various levels of government.'' This proposed rule does not have federalism implications.

It will not have substantial direct effects on the States, on the relationship between the national government and the States, or on the distribution of power and responsibilities among the various levels of government, as specified in Executive Order 13132, because it merely propose approval of a waiver from a Federal standard, and does not alter the relationship or the distribution of power and responsibilities established in the CAA. Thus, the requirements of Section 6 of the Executive Order do not apply to this rule.

F. Executive Order 13175, Coordination With Indian Tribal Governments

Executive Order 13175, entitled ''Consultation and Coordination with Indian Tribal Governments'' (65 FR 67249, November 9, 2000), requires EPA to develop an accountable process to ensure ''meaningful and timely input by tribal officials in the development of regulatory policies that have tribal implications.'' This proposed rule does not have tribal implications, as specified in Executive Order 13175.

Today's proposed rule does not significantly or uniquely affect the communities of Indian tribal governments. This action does not involve or impose any requirements that affect Indian Tribes. Thus, Executive Order 13175 does not apply to this rule.

G. Executive Order 13045, Protection of Children From Environmental Health Risks and Safety Risks

Protection of Children from Environmental Health Risks and Safety Risks (62 FR 19885, April 23, 1997), applies to any rule that: (1) Is determined to be ''economically significant'' as defined under Executive Order 12866, and (2) concerns an environmental health or safety risk that EPA has reason to believe may have a disproportionate effect on children. If the regulatory action meets both criteria, the Agency must evaluate the environmental health or safety effects of the planned rule on children, and explain why the planned regulation is preferable to other potentially effective and reasonably feasible alternatives considered by the Agency.

This rule is not subject to Executive Order 13045 because it does not involve decisions intended to mitigate environmental health or safety risks.

H. Executive Order 13211, Actions That Significantly Affect Energy Supply, Distribution, or Use

This rule is not subject to Executive Order 13211, ''Actions Concerning Regulations That Significantly Affect Energy Supply, Distribution, or Use'' (66 FR 28355, May 22, 2001) because it is not a significant regulatory action under Executive Order 12866.

I. National Technology Transfer and Advancement Act

Section 12(d) of the National Technology Transfer and Advancement Act of 1995 (''NTTAA''), Public Law 104–113, 12(d) (15 U.S.C. 272 note) directs EPA to use voluntary consensus standards in its regulatory activities unless to do so would be inconsistent with applicable law or otherwise impractical. Voluntary consensus standards are technical standards (e.g., materials specifications, test methods, sampling procedures, and business practices) that are developed or adopted by voluntary consensus standards bodies. The NTTAA directs EPA to provide Congress, through OMB, explanations when the Agency decides not to use available and applicable voluntary consensus standards.

This proposed rulemaking involves technical standards. EPA proposes the use of the following ASTM Test Methods: D2597–994, D6366–99, D4629–02 or D5762–02 for measuring the nitrogen content of fuel. They are available from ASTM International and will help insure compliance with the conditions of this action. EPA welcomes comments on this aspect of the proposed rulemaking and, specifically, invites the public to identify potentially-applicable voluntary consensus standards and to explain why such standards should be used in this regulation.

List of Subjects in 40 CFR Part 69

Environmental protection, Air pollution control.

Authority: 42 U.S.C. 7401 *et seq.*

Dated: December 7, 2006.

Stephen L. Johnson,

Administrator.

[FR Doc. E6–21198; Filed 12–12–06; 8:45 am]

BILLING CODE 6560–50–P

Notices

Federal Register

Vol. 71, No. 239

Wednesday, December 13, 2006

This section of the FEDERAL REGISTER contains documents other than rules or proposed rules that are applicable to the public. Notices of hearings and investigations, committee meetings, agency decisions and rulings, delegations of authority, filing of petitions and applications and agency statements of organization and functions are examples of documents appearing in this section.

DEPARTMENT OF AGRICULTURE

Forest Service

Tehama County Resource Advisory Committee

AGENCY: Forest Service, USDA.

ACTION: Notice of Meeting.

SUMMARY: The Tehama County Resource Advisory Committee (RAC) will meet in Red Bluff, California. Agenda items to be covered include: (1) Introductions, (2) Approval of Minutes, (3) Public Comment, (4) Status of Legislation, (5) New Allocation, (6) Chairman's Perspective, (7) General Discussion, (8) Next Agenda.

DATES: The meeting will be held on January 11, 2007, from 9 a.m. and end at approximately 12 p.m.

ADDRESSES: The meeting will be held at the Lincoln Street School, Conference Room A, 1135 Lincoln Street, Red Bluff, CA. Individuals wishing to speak or propose agenda items must send their names and proposals to David T. Morton, Acting DFO, 825 N. Humboldt Ave., Willows, CA 95988.

FOR FURTHER INFORMATION CONTACT: Bobbin Gaddini, Committee Coordinator, USDA, Mendocino National Forest, Grindstone Ranger District, P.O. Box 164, Elk Creek, CA 95939. (530) 968–5329; E-MAIL *ggaddini@fs.fed.us.*

SUPPLEMENTARY INFORMATION: The meeting is open to the public. Committee discussion is limited to Forest Service staff and Committee members. However, persons who wish to bring matters to the attention of the Committee may file written statements with the Committee staff before or after the meeting. Public input sessions will be provided and individuals who made written requests by January 7, 2007 will have the opportunity to address the committee at those sessions.

Dated: December 7, 2006.

David T. Morton,

Acting Designated Federal Official.

[FR Doc. 06–9651 Filed 12–12–06; 8:45 am]

BILLING CODE 3410–11–M

DEPARTMENT OF AGRICULTURE

Forest Service

Notice of Resource Advisory Committee Meeting

AGENCY: Modoc Resource Advisory Committee, Alturas, California, USDA Forest Service.

ACTION: Notice of meeting.

SUMMARY: Pursuant to the authorities in the Federal Advisory Committees Act (Public Law 92–463) and under the Secure Rural Schools and Community Self-Determination Act of 2000 (Public Law 106–393) the Modoc National Forest's Modoc Resource Advisory Committee will meet Monday, January 8, 2007 in Alturas, California for business meetings. The meetings are open to the public.

SUPPLEMENTARY INFORMATION: The business meeting January 8th begins at 4 p.m., at the Modoc National Forest Office, Conference Room, 800 West 12th St., Alturas. Agenda topics will include existing and future projects that meet the intent of Pub. L. 106–393. Time will also be set aside for public comments at the beginning of the meeting.

FOR FURTHER INFORMATION CONTACT: Stan Sylva, Forest Supervisor and Designated Federal Officer, at (530) 233–8700; or Public Affairs Officer Louis J. Haynes at (530) 233–8846.

Stanley G Sylva,

Forest Supervisor.

[FR Doc. E6–21211 Filed 12–12–06; 8:45 am]

BILLING CODE 3410–11–P

DEPARTMENT OF AGRICULTURE

Forest Service

Notice of Extension of Public Comment Period for Outfitting and Guiding Land Use Fees in the Alaska Region

AGENCY: Forest Service, USDA.

ACTION: Notice of extension of the public comment period.

SUMMARY: The Alaska Region of the Forest Service is extending the public comment period an additional 90 days for the notice of proposed policy published in the **Federal Register** September 15, 2006 (FR Vol. 71, No. 179, pp. 54454–54464) concerning a long term flat fee policy for outfitters and guides operating in the Alaska Region. The original notice provided for a comment period to end on December 14, 2007. The Forest Service is extending the comment period until March 14, 2007.Under the flat fee policy, a single land use fee would be charged for each type of service provided by outfitters and guides in the Alaska Region.

DATES: Comments must be received in writing by March 14, 2007.

ADDRESSES: Send comment to Regional Forester, Attention: Recreation, Lands and Minerals, P.O. Box 21628, Juneau, Alaska 99802–1628; via electronic mail to *comments-alaska-regional-office@fs.fed.us;* or via facsimile to (907) 586–7866. The public is not required to send duplicate comments via regular mail when submitting by e-mail. Please confine written comments to issues pertinent to the proposed fee policy. All comments, including names and addresses when provided, will be placed in the record and will be available for public inspection and copying. The public may inspect comments received on this proposed policy in the Recreation, Lands and Minerals Staff, Room 519D, Federal Office Building, 709 West 9th Street, Juneau, Alaska, between 9 a.m. and 4 p.m. business days. Those wishing to inspect comments are encouraged to call ahead to facilitate meeting with the Forest Service.

FOR FURTHER INFORMATION CONTACT: Trish Clabaugh, (907) 586–8855, or Neil Hagadorn, (907) 586–9336.

SUPPLEMENTARY INFORMATION: Comments received to date and those submitted until March 14, 2007 will provide the public with an opportunity to review and comment on the notice of proposed policy.

Dated: November 30, 2006.

Dennis E. Bschor,

Regional Forester, Alaska Region.

[FR Doc. 06–9655 Filed 12–12–06; 8:45 am]

BILLING CODE 3410–11–M

DEPARTMENT OF COMMERCE

International Trade Administration

A–821–819

Notice of Extension of Time Limit for Preliminary Results of Antidumping Duty Administrative Review: Magnesium Metal From the Russian Federation

AGENCY: Import Administration, International Trade Administration, Department of Commerce

EFFECTIVE DATE: December 13, 2006.

FOR FURTHER INFORMATION CONTACT: Gene Calvert or Jun Jack Zhao,AD/CVD Operations, Office 6, Import Administration, International Trade Administration, U.S. Department of Commerce, 14th Street and Constitution Avenue, NW, Washington, DC 20230; telephone: (202) 482–3586 or (202) 482–1396, respectively.

Background

The Department of Commerce (the Department) published an antidumping duty order on magnesium metal from the Russian Federation on April 15, 2005. *See Notice of Antidumping Duty Order: Magnesium Metal from the Russian Federation*, 70 FR 19930 (April 15, 2005). On April 4, 2006 and April 6, 2006, PSC VSMPO–AVISMA Corporation (formerly known as JSC AVISMA Titianium–Magnesium Works) and its affiliated U.S. reseller VSMPO–Tirus, U.S. Inc., and Solikamsk Magnesium Works, Russian Federation producers of the subject merchandise, respectively requested that the Department conduct an administrative review. On April 28, 2006, U.S. Magnesium Corporation LLC, petitioner in the investigation, also requested that the Department conduct an administrative review. On May 31, 2006, the Department published a notice of initiation of an administrative review of the antidumping duty order on the subject merchandise, for the period October 4, 2004, through March 31, 2006. *See Initiation of Antidumping and Countervailing Duty Administrative Reviews and Request for Revocation in Part*, 71 FR 30864 (May 31, 2006). The preliminary results of this administrative review are currently due no later than December 31, 2006.

Extension of Time Limit for Preliminary Results

Pursuant to section 751(a)(3)(A) of the Tariff Act of 1930, as amended, (the Act), the Department shall issue preliminary results in an administrative review of an antidumping duty order within 245 days after the last day of the anniversary month of the date of the publication of the order. The Act further provides, however, that the Department may extend the deadline for the completion of the preliminary results of a review from 245 days to 365 days if it determines that it is not practicable to complete the preliminary results within the 245-day period. *See* section 751(a)(3)(A) of the Act. Due to the complexity of issues present in this administrative review, such as complicated cost accounting issues regarding the revaluation of capital assets and the calculation of the proper byproduct offset values which will be used to determine production costs of the subject merchandise, the Department has determined that it is not practicable to complete the review within the original time period.

Section 751(a)(3)(A) of the Act and section 351.213(h)(2) of the Department's regulations allow the Department to extend the deadline for the preliminary results to a maximum 365 days from the last day of the anniversary month of the order. For the reason noted above, we are extending the time for the completion of preliminary results until no later than April 30, 2007. The deadline for the final results of this administrative review continues to be 120 days after the publication of the preliminary results.

This notice is issued and published in accordance with section 751(a)(3)(A) of the Act.

Dated: December 6, 2006.

Stephen J. Claeys

Deputy Assistant Secretary for Import Administration

[FR Doc. E6–21209 Filed 12–12–06; 8:45 am]

BILLING CODE 3510–DS–S

DEPARTMENT OF COMMERCE

International Trade Administration

[A–428–825]

Stainless Steel Sheet and Strip in Coils From Germany; Notice of Final Results of Antidumping Duty Administrative Review

AGENCY: Import Administration, International Trade Administration, Department of Commerce.

ACTION: Notice of Final Results of Antidumping Duty Administrative Review.

SUMMARY: On August 8, 2006, the Department of Commerce (the Department) published the preliminary results of administrative review of the antidumping duty order covering stainless steel sheet and strip in coils from Germany. *See Stainless Steel Sheet and Strip in Coils from Germany; Notice of Preliminary Results of Antidumping Duty Administrative Review*, 71 FR 45024 (August 8, 2006) (*Preliminary Results*). The merchandise covered by this order is stainless steel sheet and strip in coils as described in the ''Scope of the Order'' section of this notice. The period of review (POR) is July 1, 2004, through June 30, 2005. In the *Preliminary Results* we invited parties to provide comments. Based on our analysis of the comments received, we have made changes to the margin calculation. Therefore, the final results differ from the preliminary results. The final weighted–average dumping margin for the reviewed firm is listed below in the section entitled ''Final Results of the Review.''

EFFECTIVE DATE: December 13, 2006.

FOR FURTHER INFORMATION CONTACT: Deborah Scott, Tyler Weinhold, or Robert James, AD/CVD Operations, Office 7, Import Administration, International Trade Administration, U.S. Department of Commerce, 14th Street and Constitution Avenue, NW, Washington, DC 20230; telephone: (202) 482–2657, (202) 482–1121, and (202) 482–0649, respectively.

SUPPLEMENTARY INFORMATION:

Background

On August 8, 2006, the Department published the preliminary results of administrative review of the antidumping order covering stainless steel sheet and strip in coils from Germany. *See Preliminary Results*. In the *Preliminary Results* we invited parties to provide comments. In response, the Department received a case brief from German producers ThyssenKrupp Nirosta GmbH (ThyssenKrupp Nirosta), ThysssenKrupp Nirosta Prazisionsband GmbH (TKNP), ThyssenKrupp VDM GmbH (TKVDM), along with their affiliated U.S. importers ThyssenKrupp Nirosta North America, Inc. (TKNNA) and ThyssenKrupp VDM USA, Inc. (TKVDMUSA) (collectively, TKN) on September 7, 2006. Allegheny Ludlum, North American Stainless, United Auto Workers Local 3303, United Steelworkers of America, AFL–CIO/CLC, and Zanesville Armco Independent Organization (collectively, Petitioners) submitted a rebuttal brief on September 14, 2006. No party requested a hearing; accordingly, none was held.

Scope of the Order

The products covered by this order are certain stainless steel sheet and strip

in coils. Stainless steel is an alloy steel containing, by weight, 1.2 percent or less of carbon and 10.5 percent or more of chromium, with or without other elements. The subject sheet and strip is a flat–rolled product in coils that is greater than 9.5 mm in width and less than 4.75 mm in thickness, and that is annealed or otherwise heat treated and pickled or otherwise descaled. The subject sheet and strip may also be further processed (*e.g.*, cold–rolled, polished, aluminized, coated, *etc.*) provided that it maintains the specific dimensions of sheet and strip following such processing. The merchandise subject to this order is currently classifiable in the Harmonized Tariff Schedule of the United States (HTSUS) at subheadings: 7219.13.0031, 7219.13.0051, 7219.13.0071, 7219.1300.81[1], 7219.14.0030, 7219.14.0065, 7219.14.0090, 7219.32.0005, 7219.32.0020, 7219.32.0025, 7219.32.0035, 7219.32.0036, 7219.32.0038, 7219.32.0042, 7219.32.0044, 7219.33.0005, 7219.33.0020, 7219.33.0025, 7219.33.0035, 7219.33.0036, 7219.33.0038, 7219.33.0042, 7219.33.0044, 7219.34.0005, 7219.34.0020, 7219.34.0025, 7219.34.0030, 7219.34.0035, 7219.35.0005, 7219.35.0015, 7219.35.0030, 7219.35.0035, 7219.90.0010, 7219.90.0020, 7219.90.0025, 7219.90.0060, 7219.90.0080, 7220.12.1000, 7220.12.5000, 7220.20.1010, 7220.20.1015, 7220.20.1060, 7220.20.1080, 7220.20.6005, 7220.20.6010, 7220.20.6015, 7220.20.6060, 7220.20.6080, 7220.20.7005, 7220.20.7010, 7220.20.7015, 7220.20.7060, 7220.20.7080, 7220.20.8000, 7220.20.9030, 7220.20.9060, 7220.90.0010, 7220.90.0015, 7220.90.0060, and 7220.90.0080. Although the HTSUS subheadings are provided for convenience and customs purposes, the Department's written description of the merchandise under this order is dispositive.

Excluded from the scope of the order are the following: (1) sheet and strip that is not annealed or otherwise heat treated and pickled or otherwise descaled, (2) sheet and strip that is cut to length, (3) plate (*i.e.*, flat–rolled stainless steel products of a thickness of 4.75 mm or more), (4) flat wire (*i.e.*, cold–rolled sections, with a prepared edge, rectangular in shape, of a width of not more than 9.5 mm), and (5) razor blade steel. Razor blade steel is a flat–rolled product of stainless steel, not further worked than cold–rolled (cold-reduced), in coils, of a width of not more than 23 mm and a thickness of 0.266 mm or less, containing, by weight, 12.5 to 14.5 percent chromium, and certified at the time of entry to be used in the manufacture of razor blades. *See* chapter 72 of the HTSUS, ''Additional U.S. Note'' 1(d).

Flapper valve steel is also excluded from the scope of the order. This product is defined as stainless steel strip in coils containing, by weight, between 0.37 and 0.43 percent carbon, between 1.15 and 1.35 percent molybdenum, and between 0.20 and 0.80 percent manganese. This steel also contains, by weight, phosphorus of 0.025 percent or less, silicon of between 0.20 and 0.50 percent, and sulfur of 0.020 percent or less. The product is manufactured by means of vacuum arc remelting, with inclusion controls for sulphide of no more than 0.04 percent and for oxide of no more than 0.05 percent. Flapper valve steel has a tensile strength of between 210 and 300 ksi, yield strength of between 170 and 270 ksi, plus or minus 8 ksi, and a hardness (Hv) of between 460 and 590. Flapper valve steel is most commonly used to produce specialty flapper valves in compressors.

Also excluded is a product referred to as suspension foil, a specialty steel product used in the manufacture of suspension assemblies for computer disk drives. Suspension foil is described as 302/304 grade or 202 grade stainless steel of a thickness between 14 and 127 microns, with a thickness tolerance of plus–or-minus 2.01 microns, and surface glossiness of 200 to 700 percent Gs. Suspension foil must be supplied in coil widths of not more than 407 mm, and with a mass of 225 kg or less. Roll marks may only be visible on one side, with no scratches of measurable depth. The material must exhibit residual stresses of 2 mm maximum deflection, and flatness of 1.6 mm over 685 mm length.

Certain stainless steel foil for automotive catalytic converters is also excluded from the scope of this order. This stainless steel strip in coils is a specialty foil with a thickness of between 20 and 110 microns used to produce a metallic substrate with a honeycomb structure for use in automotive catalytic converters. The steel contains, by weight, carbon of no more than 0.030 percent, silicon of no more than 1.0 percent, manganese of no more than 1.0 percent, chromium of between 19 and 22 percent, aluminum of no less than 5.0 percent, phosphorus of no more than 0.045 percent, sulfur of no more than 0.03 percent, lanthanum of less than 0.002 or greater than 0.05 percent, and total rare earth elements of more than 0.06 percent, with the balance iron.

Permanent magnet iron–chromium-cobalt alloy stainless strip is also excluded from the scope of this order. This ductile stainless steel strip contains, by weight, 26 to 30 percent chromium, and 7 to 10 percent cobalt, with the remainder of iron, in widths 228.6 mm or less, and a thickness between 0.127 and 1.270 mm. It exhibits magnetic remanence between 9,000 and 12,000 gauss, and a coercivity of between 50 and 300 oersteds. This product is most commonly used in electronic sensors and is currently available under proprietary trade names such as ''Arnokrome III.''[2]

Also excluded from this order is a permanent magnet iron–chromium-cobalt stainless steel strip containing, by weight, 13 percent chromium, 6 percent cobalt, 71 percent iron, 6 percent nickel and 4 percent molybdenum. The product is supplied in widths up to 1.27 cm (12.7 mm), inclusive, with a thickness between 45 and 75 microns, inclusive. This product exhibits magnetic remanence between 400 and 780 nWb, and coercivity of between 60 and 100 oersteds. This product is currently supplied under the trade name ''SemiVac 90.''

Certain electrical resistance alloy steel is also excluded from the scope of this order. This product is defined as a non–magnetic stainless steel manufactured to American Society of Testing and Materials (ASTM) specification B344 and containing, by weight, 36 percent nickel, 18 percent chromium, and 46 percent iron, and is most notable for its resistance to high temperature corrosion. It has a melting point of 1390 degrees Celsius and displays a creep rupture limit of 4 kilograms per square millimeter at 1000 degrees Celsius. This steel is most commonly used in the production of heating ribbons for circuit breakers and industrial furnaces, and in rheostats for railway locomotives. The product is currently available under proprietary trade names such as ''Gilphy 36.''[3]

Certain martensitic precipitation–hardenable stainless steel is also excluded from the scope of this order. This high–strength, ductile stainless steel product is designated under the Unified Numbering System (UNS) as

[1] Due to changes to the HTS numbers in 2001, 7219.13.0030, 7219.13.0050, 7219.13.0070, and 7219.13.0080 are now 7219.13.0031, 7219.13.0051, 7219.13.0071, and 7219.13.0081, respectively.

[2] ''Arnokrome III'' is a trademark of the Arnold Engineering Company.

[3] ''Gilphy 36'' is a trademark of Imphy, S.A.

S45500–grade steel, and contains, by weight, 11 to 13 percent chromium, and 7 to 10 percent nickel. Carbon, manganese, silicon and molybdenum each comprise, by weight, 0.05 percent or less, with phosphorus and sulfur each comprising, by weight, 0.03 percent or less. This steel has copper, niobium, and titanium added to achieve aging, and will exhibit yield strengths as high as 1700 Mpa and ultimate tensile strengths as high as 1750 Mpa after aging, with elongation percentages of 3 percent or less in 50 mm. It is generally provided in thicknesses between 0.635 and 0.787 mm, and in widths of 25.4 mm. This product is most commonly used in the manufacture of television tubes and is currently available under proprietary trade names such as ''Durphynox 17.''[4]

Finally, three specialty stainless steels typically used in certain industrial blades and surgical and medical instruments are also excluded from the scope of this order. These include stainless steel strip in coils used in the production of textile cutting tools (*e.g.*, carpet knives).[5] This steel is similar to AISI grade 420 but containing, by weight, 0.5 to 0.7 percent of molybdenum. The steel also contains, by weight, carbon of between 1.0 and 1.1 percent, sulfur of 0.020 percent or less, and includes between 0.20 and 0.30 percent copper and between 0.20 and 0.50 percent cobalt. This steel is sold under proprietary names such as ''GIN4 Mo.'' The second excluded stainless steel strip in coils is similar to AISI 420–J2 and contains, by weight, carbon of between 0.62 and 0.70 percent, silicon of between 0.20 and 0.50 percent, manganese of between 0.45 and 0.80 percent, phosphorus of no more than 0.025 percent and sulfur of no more than 0.020 percent. This steel has a carbide density on average of 100 carbide particles per 100 square microns. An example of this product is ''GIN5'' steel. The third specialty steel has a chemical composition similar to AISI 420 F, with carbon of between 0.37 and 0.43 percent, molybdenum of between 1.15 and 1.35 percent, but lower manganese of between 0.20 and 0.80 percent, phosphorus of no more than 0.025 percent, silicon of between 0.20 and 0.50 percent, and sulfur of no more than 0.020 percent. This product is supplied with a hardness of more than Hv 500 guaranteed after customer processing, and is supplied as, for example, ''GIN6.''[6]

[4] ''Durphynox 17'' is a trademark of Imphy, S.A.

[5] This list of uses is illustrative and provided for descriptive purposes only.

[6] ''GIN4 Mo,'' ''GIN5'' and ''GIN6'' are the proprietary grades of Hitachi Metals America, Ltd.

Analysis of Comments Received

All issues raised in TKN's case brief and in Petitioners' rebuttal brief are addressed in the Memorandum to David M. Spooner, Assistant Secretary for Import Administration (Decision Memorandum), dated December 6, 2006, which is hereby adopted by this notice. A list of the issues which parties have raised and to which we have responded, all of which are in the Decision Memorandum, is attached to this notice as an appendix. The Decision Memorandum is on file in room B–099 of the main Department of Commerce building. In addition, a complete version of the Decision Memorandum can be accessed directly on the Internet at http://www.ia.ita.doc.gov/frn/index.html. The paper copy and electronic version of the Decision Memorandum are identical in content.

Changes Since the Preliminary Results

Based on our analysis of comments received, we have made changes to the margin calculation. The changes are listed below:

1. For the preliminary results, we inadvertently treated indirect selling expenses incurred in Mexico on TKN's behalf as U.S. indirect selling expenses, and deducted them from CEP. For these final results, we have treated these expenses properly as foreign indirect selling expenses and have not deducted them from CEP. See Decision Memorandum at Comment 1.
2. For the preliminary results we miscalculated the home market (HM) costs used in the CEP profit calculation by failing to convert HM quantity from metric tons to hundredweight. This had the effect of overstating the CEP profit rate and CEP profit, which is deducted from CEP. For these final results, we have recalculated these CM costs and CEP profit using the correct quantity amounts. See Decision Memorandum at Comment 2.

Final Results of the Review

We determine the following percentage weighted–average margin exists for the period July 1, 2004, through June 30, 2005:

Manufacturer / Exporter	Weighted Average Margin (percentage)
TKN	2.45

Assessment

The Department shall determine, and U.S. Bureau of Customs and Border Protection (CBP) shall assess, antidumping duties on all appropriate entries. In accordance with 19 CFR 351.212(b)(1), the Department calculates an assessment rate for each importer of the subject merchandise. Upon issuance of the final results of this review, if any importer–specific assessment rates calculated in the final results are above *de minimis* (*i.e.*, at or above 0.5 percent), we will issue appraisement instructions directly to CBP to assess antidumping duties on appropriate entries by applying the assessment rate to the entered value of the merchandise. To determine whether the duty–assessment rate covering the period is *de minimis*, in accordance with the requirement set forth in 19 CFR 351.106(c)(2), we have calculated an importer–specific assessment *ad valorem* rate by aggregating the dumping margins calculated for all U.S. sales to each customer or importer and dividing this amount by the total entered value of these sales. Where the importer–specific *ad valorem* rate is greater than *de minimis*, and where the respondent has reported reliable entered values, we instruct CBP to apply the assessment rate to the entered value of the importer's entries during the POR. The Department intends to issue assessment instructions to CBP 15 days after the date of publication of the final results of review.

The Department clarified its ''automatic assessment'' regulation on May 6, 2003. *See Antidumping and Countervailing Duty Proceedings: Assessment of Antidumping Duties*, 68 FR 23954 (May 6, 2003) (*Assessment of Antidumping Duties*). This clarification will apply to entries of subject merchandise during the period of review produced by the respondent for which it did not know its merchandise was destined for the United States. In such instances, we will instruct CBP to liquidate unreviewed entries at hte all–others rate if there is no rate for the intermediate company (or companies) involved in the transaction. For a full discussion of this clarification, *see Assessment of Antidumping Duties*.

Cash Deposit Requirements

The following deposit requirements will be effective upon publication of this notice of final results of

administrative review for all shipments of stainless steel sheet and strip in coils from Germany entered, or withdrawn from warehouse, for consumption on or after the date of publication, as provided by section 751(a)(1) of the Tariff Act of 1930, as amended (the Tariff Act): (1) the cash deposit rate for the reviewed company will be the rate shown above; (2) for previously reviewed or investigated companies not listed above, the cash deposit rate will continue to be the company–specific rate published for the most recent period; (3) if the exporter is not a firm covered in this review, a prior review, or the original less–than-fair–value (LTFV) investigation, but the manufacturer is, the cash deposit rate will be the rate established for the most recent period for the manufacturer of the merchandise; and (4) the cash deposit rate for all other manufacturers or exporters will continue to be 13.48 percent. This rate is the ''All Others'' rate from the amended final determination in the LTFV investigation of stainless steel sheet and strip in coils from Germany. *See Stainless Steel Sheet and Strip in Coils From Germany: Amended Final Determination of Antidumping Duty Investigation*, 67 FR 15178, 15179 (March 29, 2002).

These deposit requirements shall remain in effect until publication of the final results of the next administrative review.

Reimbursement

This notice also serves as a final reminder to importers of their responsibility under 19 CFR 351.402(f) to file a certificate regarding the reimbursement of antidumping or countervailing duties prior to liquidation of the relevant entries during this review period. Failure to comply with this requirement could result in the Secretary's presumption that reimbursement of antidumping or countervailing duties occurred and the subsequent assessment of doubled antidumping duties.

Notification Regarding Administrative Protective Orders

This notice also serves as a reminder to parties subject to administrative protective orders (APO) of their responsibility concerning the return or destruction of proprietary information disclosed under APO in accordance with 19 CFR 351.305. Timely written notification of the return or destruction of APO materials or conversion to judicial protective order is hereby requested. Failure to comply with the regulations and terms of an APO is a violation which is subject to sanction.

We are issuing and publishing this notice in accordance with sections 751(a)(1) and 777(i) of the Tariff Act.

Dated: December 6, 2006.

David M. Spooner,

Acting Assistant Secretaryfor Import Administration.

Appendix

Comments and Responses:

1. Whether the Department properly deducted indirect selling expenses incurred in Mexico by an affiliate on behalf of respondent TKN from CEP.
2. Whether the Department miscalculated the CEP profit rate and CEP profit.
3. Whether the Department should grant a circumstance of sale adjustment to normal value for home market (HM) indirect selling expenses beyond the amount allowed under the CEP offset.
4. Whether the Department should allow non–dumped sales to offset dumped sales in its margin calculation (zeroing)

[FR Doc. E6–21197 Filed 12–12–06; 8:45 am]

BILLING CODE 3510–DS–S

DEPARTMENT OF COMMERCE

International Trade Administration

(A–449–804)

Notice of Final Results of Antidumping Duty Administrative Review: Steel Concrete Reinforcing Bars from Latvia

AGENCY: Import Administration, International Trade Administration, Department of Commerce.

SUMMARY: On August 8, 2006, the Department of Commerce (the Department) published the preliminary results of its fourth administrative review of the antidumping duty order on steel concrete reinforcing bars (rebar) from Latvia. The review covers one producer of the subject merchandise. The period of review (POR) is September 1, 2004, through August 31, 2005. Based on our analysis of comments received, these final results differ from the preliminary results. The final results are listed below in the *Final Results of Review* section.

EFFECTIVE DATE: December 13, 2006.

FOR FURTHER INFORMATION CONTACT: Saliha Loucif at (202) 482–1779 or Julie Santoboni at (202) 482–4194; AD/CVD Operations, Office 1, Import Administration, International Trade Administration, U.S. Department of Commerce, 14th Street & Constitution Avenue, NW, Washington, DC 20230.

SUPPLEMENTARY INFORMATION:

Background

On August 8, 2006, the Department published in the **Federal Register** the preliminary results of the fourth administrative review of the antidumping duty order on rebar from Latvia. *See Notice of Preliminary Results of Antidumping Duty Administrative Review: Steel Concrete Reinforcing Bars from Latvia*, 71 FR 45031 (August 8, 2006) (*Preliminary Results*). We invited parties to comment on the *Preliminary Results*. On September 7, 2006, we received case briefs from the sole respondent, Joint Stock Company Liepajas Metalurgs (LM), and from the petitioners, the Rebar Trade Action Coalition (RTAC) and its individual members.[1] No interested party requested a hearing during this review.

Scope of the Order

The product covered by this order is all steel concrete reinforcing bars sold in straight lengths, currently classifiable in the Harmonized Tariff Schedule of the United States (HTSUS) under item numbers 7214.20.00, 7228.30.8050, 7222.11.0050, 7222.30.0000, 7228.60.6000, 7228.20.1000, or any other tariff item number. Specifically excluded are plain rounds (i.e., non–deformed or smooth bars) and rebar that has been further processed through bending or coating. HTSUS subheadings are provided for convenience and customs purposes. The written description of the scope of the order is dispositive.

Analysis of Comments Received

The issues raised in the briefs by parties to this administrative review are addressed in the *Issues and Decision Memorandum* to David M. Spooner, Assistant Secretary for Import Administration, from Stephen J. Claeys, Deputy Assistant Secretary (*Decision Memorandum*), dated December 6, 2006, which is hereby adopted by this notice. A list of the issues addressed in the *Decision Memorandum* is appended to this notice. The *Decision Memorandum* is on file in Room B–099 of the main Department building, and can also be accessed directly on the Web at *http://ia.ita.doc.gov/frn/index.html*. The paper copy and electronic version of the *Decision Memorandum* are identical in content.

[1] Commercial Metals Company, Gerdau Ameristeel Corporation, and Nucor Corporation are the members of RTAC.

Changes Since the Preliminary Results

Based on our analysis of comments received, we adjusted the calculation methodology used in the *Preliminary Results*. First, we calculated general and administrative expenses (G&A) and interest expenses based on LM's financial statements for the Fiscal Year 2005, which is the time period that most closely corresponds to the POR. Second, we moved expenses for LM's football and hockey clubs from G&A expenses to indirect selling expenses because these clubs provide indirect advertising benefits to the company. Finally, we adjusted the calculation of the variable cost of manufacturing in the margin calculation program to account for a clerical error. These adjustments are discussed in detail in the *Decision Memorandum*.

Final Results of Review

As a result of our review, we determine that the following weighted–average margin exists for the period of September 1, 2004, through August 31, 2005:

Producer	Weighted–Average Margin (Percentage)
Joint Stock Company Liepajas Metalurgs	5.94

Assessment

The Department will determine, and U.S. Customs and Border Protection (CBP) shall assess, antidumping duties on all appropriate entries, pursuant to 19 CFR 351.212(b). The Department calculated importer–specific duty assessment rates on the basis of the ratio of the total amount of antidumping duties calculated for the examined sales to the total entered value of the examined sales for that importer. Where the assessment rate is above *de minimis*, we will instruct CBP to assess duties on all entries of subject merchandise by that importer. The Department intends to issue assessment instructions to CBP 15 days after the date of publication of these final results of review.

The Department clarified its ''automatic assessment'' regulation on May 6, 2003 (68 FR 23954). This clarification will apply to entries of subject merchandise during the POR produced by companies included in these preliminary results of review for which the reviewed companies did not know their merchandise was destined for the United States. In such instances, the Department will instruct CBP to liquidate unreviewed entries at the all–others rate if there is no rate for the intermediate company(ies) involved in the transaction. For a full discussion of this clarification, *see Antidumping and Countervailing Duty Proceedings: Assessment of Antidumping Duties*, 68 FR 23954 (May 6, 2003).

Cash Deposits

Furthermore, the following deposit requirements will be effective upon publication of the final results of this administrative review for all shipments of rebar from Latvia entered, or withdrawn from warehouse, for consumption on or after the publication date of these final results, as provided by section 751(a) of the Tariff Act of 1930, as amended (the Act): (1) For LM, the cash deposit rate will be 5.94 percent; (2) for merchandise exported by producers or exporters not covered in this review but covered in a previous segment of this proceeding, the cash deposit rate will continue to be the company–specific rate published in the most recent final results in which that producer or exporter participated; (3) if the exporter is not a firm covered in this review or in any previous segment of this proceeding, but the producer is, the cash deposit rate will be that established for the producer of the merchandise in these final results of review or in the most recent final results in which that producer participated; and (4) if neither the exporter nor the producer is a firm covered in this review or in any previous segment of this proceeding, the cash deposit rate will be 17.21 percent, the ''All Others'' rate established in the less–than-fair–value investigation. These deposit requirements shall remain in effect until publication of the final results of the next administrative review.

This notice also serves as a final reminder to importers of their responsibility under 19 CFR 351.402(f) to file a certificate regarding the reimbursement of antidumping duties prior to liquidation of the relevant entries during this review period. Failure to comply with this requirement could result in the Secretary's presumption that reimbursement of antidumping duties occurred, and in the subsequent assessment of double antidumping duties.

This notice also is the only reminder to parties subject to administrative protective order (APO) of their responsibility concerning the return or destruction of proprietary information disclosed under APO in accordance with 19 CFR 351.305. Timely written notification of the return/destruction of APO materials or conversion to judicial protective order is hereby requested. Failure to comply with the regulations and the terms of an APO is a sanctionable violation.

We are issuing and publishing these results and notice in accordance with sections 751(a)(1) and 777(i)(1) of the Act.

Dated: December 6, 2006.

David M. Spooner,

Assistant Secretaryfor Import Administration.

Appendix

Comment 1: Use of Monthly Cost Comparison Periods
Comment 2: Date of Sale
Comment 3: General and Administrative Expense Ratio Calculation
Comment 4: Clerical Error
Comment 5: Treatment of Non–Dumped Sales
Comment 6: Financial Statements Used for General and Administrative Expenses and Interest Expenses

[FR Doc. E6–21205 Filed 12–12–06; 8:45 am]

BILLING CODE 3510–DS–S

ENVIRONMENTAL PROTECTION AGENCY

[EPA–HQ–OPP–2006–0987; FRL–8107–9]

FIFRA Scientific Advisory Panel; Notice of Public Meeting

AGENCY: Environmental Protection Agency (EPA).

ACTION: Notice.

SUMMARY: There will be a 2–day meeting of the Federal Insecticide, Fungicide, and Rodenticide Act Scientific Advisory Panel (FIFRA SAP) to consider and review the status of the *in utero* through lactational assay in the Endocrine Disruptor Screening Program (EDSP).

DATES: The meeting will be held on February 27-28, 2007, from 8:30 a.m. to 5 p.m, eastern time.

Comments: The Agency encourages submission of written comments by February 13, 2007 and requests for oral comments by February 20, 2007. However, written comments and requests to make oral comments may be submitted until the date of the meeting. For additional instructions, see Unit I.C. of the **SUPPLEMENTARY INFORMATION**.

Nominations: Nominations of candidates to serve as ad hoc members of the FIFRA SAP for this meeting should be provided on or before December 26, 2006.

Special Accommodations: For information on access or services for individuals with disabilities, and to request accommodation of a disability, please contact the Designated Federal Official (DFO) listed under **FOR FURTHER INFORMATION CONTACT** at least 10 days prior to the meeting to give EPA as much time as possible to process your request.

ADDRESSES: The meeting will be held at the Environmental Protection Agency, Conference Center - Lobby Level, One Potomac Yard (South Bldg.), 2777 S. Crystal Drive, Arlington, VA 22202.

Comments: Submit your comments, identified by docket ID number EPA–HQ–OPP–2006–0987, by one of the following methods:

- *Federal eRulemaking Portal: http://www.regulations.gov*. Follow the on-line instructions for submitting comments. Your use of the Federal eRulemaking Portal to submit comments to EPA electronically is EPA's preferred method for receiving comments.
- *Mail*: Office of Pesticide Programs (OPP) Regulatory Public Docket (7502P), Environmental Protection Agency, 1200 Pennsylvania Ave., N.W., Washington, DC 20460-0001.
- *Delivery*: OPP Regulatory Public Docket (7502P), Environmental Protection Agency, Rm. S-4400, One Potomac Yard (South Bldg), 2777 S. Crystal Drive, Arlington, VA. Deliveries are only accepted during the Docket's normal hours of operation (8:30 a.m. to 4 p.m., Monday through Friday, excluding legal holidays). Special arrangements should be made for deliveries of boxed information. The Docket telephone number is (703) 305-5805.

Instructions: Direct your comments to docket ID number EPA–HQ–OPP–2006–0987. If your comments contain any information that you consider to be CBI or otherwise protected, please contact the DFO listed under **FOR FURTHER INFORMATION CONTACT** to obtain special instruction before submitting your comments. EPA's policy is that all comments received will be included in the docket without change and may be made available on-line at *http://www.regulations.gov*, including any personal information provided, unless the comment includes information claimed to be Confidential Business Information (CBI) or other information whose disclosure is restricted by statute. Do not submit information that you consider to be CBI or otherwise protected through regulations.gov or e-mail. The regulations.gov website is an ''anonymous access'' system, which means EPA will not know your identity or contact information unless you provide it in the body of your comment. If you send an e-mail comment directly to EPA without going through regulations.gov, your e-mail address will be automatically captured and included as part of the comment that is placed in the docket and made available on the Internet. If you submit an electronic comment, EPA recommends that you include your name and other contact information in the body of your comment and with any disk or CD ROM you submit. If EPA cannot read your comment due to technical difficulties and cannot contact you for clarification, EPA may not be able to consider your comment. Electronic files should avoid the use of special characters, any form of encryption, and be free of any defects or viruses.

Docket: All documents in the docket are listed in a docket index that is available at *http://www.regulations.gov.* Although listed in a docket index, some information is not publicly available, e.g., CBI or other information whose disclosure is restricted by statute. Certain other material, such as copyrighted material, is not placed on the Internet and will be publicly available only in hard copy form. Publicly available docket materials are available in the electronic docket at *http://www.regulations.gov*, or, if only available in hard copy, at the OPP Regulatory Public Docket in Rm. S-4400, One Potomac Yard (South Bldg), 2777 S. Crystal Drive, Arlington, VA. The hours of operation of this Docket Facility are from 8:30 a.m. to 4 p.m., Monday through Friday, excluding legal holidays. The Docket telephone number is (703) 305-5805.

Nominations, requests to present oral comments, and requests for special accommodations: Submit nominations to serve as an ad hoc member of the FIFRA SAP, requests for special seating accommodations, or requests to present oral comments to the DFO listed under **FOR FURTHER INFORMATION CONTACT**.

FOR FURTHER INFORMATION CONTACT: William Wooge, DFO, Office of Science Coordination and Policy (7201M), Environmental Protection Agency, 1200 Pennsylvania Ave., NW., Washington, DC 20460; telephone number: 202-564-8476; fax number: 202-564-8382; e-mail addresses: *wooge.william@epa.gov*.

SUPPLEMENTARY INFORMATION:

I. General Information

A. Does this Action Apply to Me?

This action is directed to the public in general. This action may, however, be of interest to persons who are or may be required to conduct testing of chemical substances under the Federal Food, Drug, and Cosmetic Act (FFDCA), FIFRA, and the Food Quality Protection Act of 1996 (FQPA). Since other entities may also be interested, the Agency has not attempted to describe all the specific entities that may be affected by this action. If you have any questions regarding the applicability of this action to a particular entity, consult the DFO listed under **FOR FURTHER INFORMATION CONTACT**.

B. What Should I Consider as I Prepare My Comments for EPA?

Tips for preparing your comments. When submitting comments, remember to:

1. Identify the document by docket ID number and other identifying information (subject heading, **Federal Register** date and page number).
2. Follow directions. The Agency may ask you to respond to specific questions or organize comments by referencing a Code of Federal Regulations (CFR) part or section number.
3. Explain why you agree or disagree; suggest alternatives and substitute language for your requested changes.
4. Describe any assumptions and provide any technical information and/or data that you used.
5. If you estimate potential costs or burdens, explain how you arrived at your estimate in sufficient detail to allow for it to be reproduced.
6. Provide specific examples to illustrate your concerns and suggest alternatives.
7. Explain your views as clearly as possible, avoiding the use of profanity or personal threats.
8. Make sure to submit your comments by the comment period deadline identified.

C. How May I Participate in this Meeting?

You may participate in this meeting by following the instructions in this unit. To ensure proper receipt by EPA, it is imperative that you identify docket ID number EPA–HQ–OPP–2006–0987 in the subject line on the first page of your request.

1. *Written comments*. The Agency encourages that written comments be submitted, using the instructions in **ADDRESSES**, no later than February 13, 2007, to provide FIFRA SAP the time necessary to consider and review the written comments. However, written comments are accepted until the date of the meeting. Persons wishing to submit written comments at the meeting should contact the DFO listed under **FOR FURTHER INFORMATION CONTACT** and submit 30 copies. There is no limit on the extent of written comments for consideration by FIFRA SAP.

2. *Oral comments*. The Agency encourages that each individual or group wishing to make brief oral comments to the FIFRA SAP submit their request to the DFO listed under **FOR FURTHER INFORMATION CONTACT** no later than February 20, 2007, in order to be included on the meeting agenda.

Requests to present oral comments will be accepted until the date of the meeting and, to the extent that time permits, the Chair of the FIFRA SAP may permit the presentation of oral comments at the meeting by interested persons who have not previously requested time. The request should identify the name of the individual making the presentation, the organization (if any) the individual will represent, and any requirements for audiovisual equipment (e.g., overhead projector, 35 mm projector, chalkboard). Oral comments before FIFRA SAP are limited to approximately 5 minutes unless prior arrangements have been made. In addition, each speaker should bring 30 copies of his or her comments and presentation slides for distribution to the FIFRA SAP at the meeting.

3. *Seating at the meeting*. Seating at the meeting will be on a first-come basis.

4. *Request for nominations to serve as ad hoc members of the FIFRA SAP for this meeting*. As part of a broader process for developing a pool of candidates for each meeting, the FIFRA SAP staff routinely solicits the stakeholder community for nominations of prospective candidates for service as ad hoc members of the FIFRA SAP. Any interested person or organization may nominate qualified individuals to be considered as prospective candidates for a specific meeting. Individuals nominated for this meeting should have expertise in one or more of the following areas: Mammalian (rat) reproductive endocrinology and developmental and reproductive toxicology. Nominees should be scientists who have sufficient professional qualifications, including training and experience, to be capable of providing expert comments on the scientific issues for this meeting. Nominees should be identified by name, occupation, position, address, and telephone number. Nominations should be provided to the DFO listed under **FOR FURTHER INFORMATION CONTACT** on or before December 26, 2006. The Agency will consider all nominations of prospective candidates for this meeting that are received on or before this date. However, final selection of ad hoc members for this meeting is a discretionary function of the Agency.

The selection of scientists to serve on the FIFRA SAP is based on the function of the panel and the expertise needed to address the Agency's charge to the panel. No interested scientists shall be ineligible to serve by reason of their membership on any other advisory committee to a Federal department or agency or their employment by a Federal department or agency except the EPA. Other factors considered during the selection process include availability of the potential panel member to fully participate in the panel's reviews, absence of any conflicts of interest or appearance of lack of impartiality, independence with respect to the matters under review, and lack of bias. Though financial conflicts of interest, the appearance of lack of impartiality, lack of independence, and bias may result in disqualification, the absence of such concerns does not assure that a candidate will be selected to serve on the FIFRA SAP. Numerous qualified candidates are identified for each panel. Therefore, selection decisions involve carefully weighing a number of factors including the candidates' areas of expertise and professional qualifications and achieving an overall balance of different scientific perspectives on the panel. In order to have the collective breadth of experience needed to address the Agency's charge for this meeting, the Agency anticipates selecting approximately 10 ad hoc scientists. If a prospective candidate for service on the FIFRA SAP is considered for participation in a particular session, the candidate is subject to the provisions of 5 CFR part 2634, Executive Branch Financial Disclosure, as supplemented by the EPA in 5 CFR part 6401. As such, the FIFRA SAP candidate is required to submit a Confidential Financial Disclosure Form for Special Government Employees Serving on Federal Advisory Committees at the U.S. Environmental Protection Agency (EPA Form 3110-48 [5-02]) which shall fully disclose, among other financial interests, the candidate's employment, stocks and, bonds, and where applicable, sources of research support. The EPA will evaluate the candidates financial disclosure form to assess whether there are financial conflicts of interest, appearance of a lack of impartiality or any prior involvement with the development of the documents under consideration (including previous scientific peer review) before the candidate is considered further for service on the FIFRA SAP. Those who are selected from the pool of prospective candidates will be asked to attend the public meetings and to participate in the discussion of key issues and assumptions at these meetings. In addition, they will be asked to review and to help finalize the meeting minutes. The list of FIFRA SAP members participating at this meeting will be posted on the FIFRA SAP web site at *http://epa.gov/scipoly/sap* or may be obtained from the OPP Regulatory Public Docket at *http://www.regulations.gov*.

II. Background

A. Purpose of the FIFRA SAP

The FIFRA SAP serves as the primary scientific peer review mechanism of the United States Environmental Protection Agency (EPA), Office of Prevention, Pesticides and Toxic Substances and is structured to provide scientific advice, information and recommendations to the EPA Administrator on pesticides and pesticide-related issues as to the impact of regulatory actions on health and the environment. The FIFRA SAP is a Federal advisory committee established in 1975 under the Federal Insecticide, Fungicide and Rodenticide Act that operates in accordance with requirements of the Federal Advisory Committee Act. The FIFRA SAP is composed of a permanent panel consisting of seven members who are appointed by the EPA Administrator from nominees provided by the National Institutes of Health and the National Science Foundation. FIFRA, as amended by the 1996 Food Quality Protection Act, established a Science Review Board consisting of at least 60 scientists who are available to the Scientific Advisory Panel on an ad hoc basis to assist in reviews conducted by the Panel. As a peer review mechanism, the FIFRA SAP provides comments, evaluations and recommendations to improve the effectiveness and quality of analyses made by Agency scientists. Members of the FIFRA SAP are scientists who have sufficient professional qualifications, including training and experience, to provide expert advice and recommendations to the Agency.

B. Public Meeting

The EPA is implementing the Endocrine Disruptor Screening Program (EDSP) in response to a 1996 Congressional mandate in the Federal Food, Drug, and Cosmetic Act (FFDCA) to establish a screening program using validated assays to identify pesticides that may have estrogenic effects in humans and other endocrine effects, as designated by the EPA Administrator. The Agency also has authority to include other non-pesticide chemicals that have an effect cumulative to that of a pesticide to which a substantial human population may be exposed. In developing the EDSP, the EPA considered the recommendations of the Endocrine Disruptor Screening and Testing Advisory Committee (EDSTAC), a panel chartered pursuant to the Federal Advisory Committee Act

(FACA). The screening program was also reviewed by EPA's Science Advisory Board and by the Scientific Advisory Panel (SAB/SAP), as required by the FFDCA. It was recommended that the EPA address both human and ecological effects and examine effects to estrogen, androgen, and thyroid (EAT) related processes, and that a two-tiered approach be used for screening. The purpose of the Tier-1 battery is to identify substances that have the potential to interact with the endocrine system. The purpose of Tier 2 is to confirm the interaction, identify any adverse effects, and establish quantitative relationships between dose and adverse effects.

Both the EDSTAC and SAB/SAP recognized the importance of chemical exposure during development *in utero* as well as during lactation and, therefore, recommended an *in utero* through lactational animal model to detect effects that may result from pre- and postnatal exposure. The EDSTAC and SAB/SAP also recommended that any *in utero* through lactational bioassay should be developed in a way that would allow for replacement of one or more of the other assays proposed for the Tier-1 screening battery.

The EDSP commissioned an *in utero* through lactational Detailed Review Paper (DRP) that consisted of an extensive review of the scientific literature regarding chemicals known to disrupt the EAT hormone systems during pre- and postnatal development. The DRP presented three *in utero* through lactational bioassay protocols for the EDSP to consider. The EPA presented the DRP and its recommendations to the Endocrine Disruptor Methods Validation Subcommittee (EDMVS) for review and discussion. The most comprehensive of the three protocols was chosen and tested with methoxychlor, a positive compound that is known to have estrogenic, anti-estrogenic and anti-androgenic effects. In general, the EDMVS agreed with this pre-validation approach with the expectation that the EPA would return to a federal advisory committee such as the SAP to review and discuss the results of the *in utero* through lactational study with methoxychlor.

The purpose of this meeting is to allow the SAP to review and discuss the protocol and assay results of an *in utero* through lactational study with methoxychlor within the current context of the EDSP and to provide advice that will inform the EPA's decision to continue, modify or suspend the development of an *in utero* through lactational bioassay as a screening assay in a Tier-1 battery.

C. FIFRA SAP Documents and Meeting Minutes.

EPA's background materials, charge/questions to the FIFRA SAP, FIFRA SAP composition (i.e., members and ad hoc members for this meeting), and the meeting agenda will be available by late January 2007. In addition, the Agency may provide additional background documents as the materials become available. You may obtain electronic copies of these documents, and certain other related documents that might be available electronically, at http://www.regulations.gov and the FIFRA SAP homepage at *http://www.epa.gov/scipoly/sap.*

The FIFRA SAP will prepare meeting minutes summarizing its recommendations to the Agency approximately 90 days after the meeting. The meeting minutes will be posted on the FIFRA SAP web site or may be obtained from the OPP Regulatory Public Docket at *http://www.regulations.gov.*

List of Subjects

Environmental protection, Pesticides and pests.

Dated: December 7, 2006.

Elizabeth A. Resek,

Director, Office of Science Coordination and Policy.

[FR Doc. E6–21201 Filed 12–12–06; 8:45 am]

BILLING CODE 6560–50–S

ENVIRONMENTAL PROTECTION AGENCY

[EPA-HQ-OPP-2005-0098; FRL–8107–1]

Ethyl Parathion; Product Cancellation Order

AGENCY: Environmental Protection Agency (EPA).

ACTION: Notice.

SUMMARY: This notice announces EPA's order for the cancellations, voluntarily requested by the Drexel Chemical Company and accepted by the Agency, of products containing the pesticide ethyl parathion, pursuant to section 6(f)(1) of the Federal Insecticide, Fungicide, and Rodenticide Act (FIFRA), as amended. This cancellation order follows April 27, 2005 **Federal Register** Notice of Receipt of Requests from the ethyl parathion registrant to voluntarily cancel all their ethyl parathion product registrations. These are the last ethyl parathion products registered for use in the United States. In the April 27, 2005 Notice, EPA indicated that it would issue an order implementing the cancellations and/or amendments to terminate uses, unless the Agency received substantive comments within the 30–day comment period that would merit its further review of these requests, or unless the registrants withdrew their requests within this period. The Agency did not receive any comments on the Notice. Further, the registrant did not withdraw their requests. Accordingly, EPA hereby issues in this notice a cancellation order granting the requested cancellations. Any distribution, sale, or use of the ethyl parathion products subject to this cancellation order is permitted only in accordance with the terms of this order, including any existing stocks provisions.

DATES: The cancellations are effective December 13, 2006.

FOR FURTHER INFORMATION CONTACT: Laura Parsons, Special Review and Reregistration Division (7508P), Office of Pesticide Programs, Environmental Protection Agency, 1200 Pennsylvania Ave., NW., Washington, DC 20460-0001; telephone number: (703) 305-5776; fax number: (703) 305-8005; e-mail address: *parsons.laura@epa.gov*.

SUPPLEMENTARY INFORMATION:

I. General Information

A. Does this Action Apply to Me?

This action is directed to the public in general, and may be of interest to a wide range of stakeholders including environmental, human health, and agricultural advocates; the chemical industry; pesticide users; and members of the public interested in the sale, distribution, or use of pesticides. Since others also may be interested, the Agency has not attempted to describe all the specific entities that may be affected by this action. If you have any questions regarding the applicability of this action to a particular entity, consult the person listed under **FOR FURTHER INFORMATION CONTACT.**

B. How Can I Get Copies of this Document and Other Related Information?

1. *Docket.* EPA has established a docket for this action under docket identification (ID) number EPA-HQ-OPPT-2005-0098. Publicly available docket materials are available either in the electronic docket at *http://www.regulations.gov*, or, if only available in hard copy, at the Office of Pesticide Programs (OPP) Regulatory Public Docket in Rm. S-4400, One Potomac Yard (South Building), 2777 S. Crystal Drive Arlington, VA. The hours

of operation of this Docket Facility are from 8:30 a.m. to 4 p.m., Monday through Friday, excluding legal holidays. The Docket telephone number is (703) 305-5805.

2. *Electronic access.* You may access this **Federal Register** document electronically through the EPA Internet under the **Federal Register** listings at *http://www.epa.gov/fedrgstr/*.

II. What Action is the Agency Taking?

This notice announces the cancellation, as requested by registrants, of all end-use and manufacturing-use ethyl parathion products registered under section 3 of FIFRA. These registrations are listed in sequence by registration number in Table 1 of this unit.

TABLE 1.—ETHYL PARATHION PRODUCT CANCELLATIONS

EPA Registration No.	Product Name
19713-322	Drexel Seis-TRES 6-3
19713-323	Drexel Parathion 8
19713-324	IDA Seis-Tres 6-3
19713-325	Drexel Parathion 4 EC

Table 2 of this unit includes the name and address of record for the registrant of the products in Table 1 of this unit.

TABLE 2.—REGISTRANT OF CANCELLED ETHYL PARATHION PRODUCTS

EPA Company No.	Company Name and Address
19713	Drexel Chemical Company 1700 Channel Avenue P.O. Box 13327 Memphis, TN 38113-0327

III. Summary of Public Comments Received and Agency Response to Comments

During the public comment period provided, EPA received no comments in response to the April 27, 2005 **Federal Register** (70 FR 21761; FRL-7709-8) notice announcing the Agency's receipt of the request for voluntary cancellations.

IV. Cancellation Order

Pursuant to FIFRA section 6(f), EPA hereby approves the requested cancellations of ethyl parathion registrations identified in Table 1 of Unit II. Accordingly, the Agency orders that the ethyl parathion product registrations identified in Table 1 of Unit II. are hereby canceled. Any distribution, sale, or use of existing stocks of the products identified in Table 1 of Unit II. in a manner inconsistent with any of the Provisions for Disposition of Existing Stocks set forth in Unit VI. will be considered a violation of FIFRA.

V. What is the Agency's Authority for Taking this Action?

Section 6(f)(1) of FIFRA provides that a registrant of a pesticide product may at any time request that any of its pesticide registrations be canceled or amended to terminate one or more uses. FIFRA further provides that, before acting on the request, EPA must publish a notice of receipt of any such request in the **Federal Register**. Thereafter, following the public comment period, the Administrator may approve such a request.

VI. Provisions for Disposition of Existing Stocks

Existing stocks are those stocks of registered pesticide products which are currently in the United States and which were packaged, labeled, and released for shipment prior to the effective date of the cancellation action. The cancellation order issued in this Notice includes the following existing stocks provisions. Because no product has been produced, sold or distributed for several years, the prohibition on sales, distribution and use of existing stocks is effective immediately.

List of Subjects

Environmental protection, Pesticides and pests.

Dated: December 4, 2006.

Debra Edwards,

Director, Special Review and Reregistration Division, Office of Pesticide Programs.

[FR Doc. E6–20988 Filed 12–12–06; 8:45 am]

BILLING CODE 6560–50–S

ENVIRONMENTAL PROTECTION AGENCY

[EPA-HQ-OPP-2002-0202; FRL-8103-4]

Lindane; Cancellation Order

AGENCY: Environmental Protection Agency (EPA).

ACTION: Notice.

SUMMARY: This notice announces EPA's issuance of final orders cancelling the registrations of all pesticide products containing the pesticide lindane. The cancellation orders followed the August 23, 2006 **Federal Register** Notice of Receipt of Requests (71 FR 49445) (FRL-8089-1) from the lindane registrants to voluntarily cancel their lindane product registrations and announcing the commencement of a public comment period as required by section 6(f)(1) of the Federal Insecticide, Fungicide and Rodenticide Act (FIFRA). In the August 23, 2006 notice, EPA indicated that it would issue an order implementing the cancellations to terminate uses unless the Agency received substantive comments within the 30-day comment period that would merit its further review of these requests, or unless the registrant(s) withdrew their request(s) within this period. The Agency did not receive any comments that required further review of the cancellation requests. Further, the registrants did not withdraw their requests. Accordingly, EPA sent final cancellation orders to the registrants granting the requested cancellations. Any distribution, sale, or use of the lindane products subject to these cancellation orders is permitted only in accordance with the terms of the existing stocks provisions in the cancellation orders and described in Unit VI.

DATES: Cancellation of manufacturing-use product registrations was effective on October 4, 2006, and the last date of use will be July 1, 2007. Cancellation of end-use product registrations will be effective on July 1, 2007, and the last date of use will be October 1, 2009.

FOR FURTHER INFORMATION CONTACT: Mark T. Howard, Special Review and Reregistration Division (7508P), Office of Pesticide Programs, Environmental Protection Agency, 1200 Pennsylvania Ave., NW., Washington, DC 20460-0001; telephone number: (703) 308-8172; fax number: (703) 308-8005; e-mail address: *howard.markt@epa.gov*.

SUPPLEMENTARY INFORMATION:

I. General Information

A. Does this Action Apply to Me?

This action is directed to the public in general, and may be of interest to a wide range of stakeholders including environmental, human health, and agricultural advocates; the chemical industry; pesticide users; and members of the public interested in the sale, distribution, or use of pesticides. Since others also may be interested, the Agency has not attempted to describe all the specific entities that may be affected by this action. If you have any questions regarding the applicability of this action to a particular entity, consult the person listed under **FOR FURTHER INFORMATION CONTACT**.

B. How Can I Get Copies of this Document and Other Related Information?

1. *Docket*. EPA has established a docket for this action under docket identification (ID) number EPA-HQ-OPP-2002-0202. Publicly available docket materials are available either in the electronic docket at *http://www.regulations.gov*, or, if only available in hard copy, at the Office of Pesticide Programs (OPP) Regulatory Public Docket in Rm. S-4400, One Potomac Yard (South Bldg.), 2777 S. Crystal Dr., Arlington, VA. The hours of operation of this Docket Facility are from 8:30 a.m. to 4 p.m., Monday through Friday, excluding legal holidays. The Docket telephone number is (703) 305-5805.

2. *Electronic access*. You may access this **Federal Register** document electronically through the EPA Internet under the **Federal Register** listings at *http://www.epa.gov/fedrgstr*.

II. What Action is the Agency Taking?

This notice announces the cancellation of registrations of all lindane products. These registrations are listed in sequence by registration number in Table 1 of this unit, along with the effective date of the cancellation and last date of use.

TABLE 1.—LINDANE PRODUCT CANCELLATIONS

Registration No.	Product name	Company	Effective Date of Cancellation	Last Date of Use
400-490	Gustafson Flowable Lindane 40%	Chemtura USA Corp.	July 1, 2007	October 1, 2009
400-532	Sorghum Guard	Chemtura USA Corp.	July 1, 2007	October 1, 2009
400-538	Gustafson Lindane 30C Flowable	Chemtura USA Corp.	July 1, 2007	October 1, 2009
400-539	Gustafson Captan Lindane 12.5-25	Chemtura USA Corp.	July 1, 2007	October 1, 2009
400-540	Gustafson Vitavax-Thiram-Lindane Flowable Fungicide Insecticide	Chemtura USA Corp.	July 1, 2007	October 1, 2009
554-140	DB-Green L	AGSCO Inc.	July 1, 2007	October 1, 2009
554-144	Lindane ST-40	AGSCO Inc	July 1, 2007	October 1, 2009
19713-61	Lindane Technical	Drexel Chemical Co.	October 4, 2006	July 1, 2007
19713-191	Lindane Technical	Drexel Chemical Co.	October 4, 2006	July 1, 2007
19713-387	Lindane Flowable	Drexel Chemical Co.	July 1, 2007	October 1, 2009
19713-401	Lindane 30%	Drexel Chemical Co.	July 1, 2007	October 1, 2009
82378-1	Lindane Technical	JLM International Inc.	October 4, 2006	July 1, 2007

Table 2 of this unit includes the names and addresses of record for all registrants of the products in Table 1 of this unit, in sequence by EPA company number.

TABLE 2—REGISTRANTS OF CANCELLED LINDANE PRODUCTS

EPA Company No.	Company Name and Address
400	Chemtura USA Corporation 199 Benson Road Middlebury, Connecticut 06749
540	AGSCO Inc. PO Box 13458 Grand Forks, North Dakota 58208-3458
19713	Drexel Chemical Co. 1700 Channel Avenue, PO Box 13327 Memphis, Tennessee 38113-0327

TABLE 2—REGISTRANTS OF CANCELLED LINDANE PRODUCTS—Continued

EPA Company No.	Company Name and Address
82378	JLM International Inc. 8675 Hidden River Parkway Tampa, Florida 33637

III. Summary of Public Comments Received and Agency Response to Comments

The Agency received one comment from a children's advocacy group in favor of the cancellation.

IV. Summary of Cancellation Orders

Pursuant to FIFRA section 6(f)(1)(A), EPA granted the cancellation requests for the registrations identified in Table 1 of Unit II. Accordingly, the Agency ordered the cancellation of the manufacturing-use product registrations effective October 4, 2006. EPA ordered the cancellation of end-use product registrations effective July 1, 2007. Any distribution, sale, or use of existing stocks of the products identified in Table 1 in Unit II. in a manner inconsistent with any of the Provisions for Disposition of Existing Stocks set forth in Unit VI. and in the cancellation orders sent to the registrants will be considered a violation of FIFRA. Copies of the cancellation orders are in the docket.

V. What is the Agency's Authority for Taking this Action?

Section 6(f)(1) of FIFRA provides that a registrant of a pesticide product may at any time request that any of its pesticide registrations be canceled or amended to terminate one or more uses. FIFRA further provides that, before acting on the request, EPA must publish a notice of receipt of any such request in the **Federal Register**. Thereafter, following the public comment period, the Administrator may approve such a request.

VI. Provisions for Disposition of Existing Stocks

Cancellation of manufacturing-use product registrations was effective on October 4, 2006. Cancellation of end-use product registrations will be effective on July 1, 2007. Existing stocks are those stocks of registered pesticide products which are currently in the United States and which were packaged, labeled, and released for shipment prior to the effective date of the cancellation action. It would be a violation of FIFRA to distribute or sell any stocks currently in the United States which have been produced, packaged, labeled, or released for shipment after the effective dates of cancellation listed in this document.

Existing stocks of the canceled products may be legally distributed or sold until the last date on which the product can be used, as specified in the cancellation orders, provided that use of existing stocks is consistent with the terms of the previously approved labeling on, or that accompanies, the modified product. For manufacturing-use products, the Agency has established in the canellation orders July 1, 2007, as the last day on which exisiting stocks of these products can be used. For end-use products, the Agency expects that existing stocks will be exhausted by October 1, 2009, and, as such, has established in the cancellation orders October 1, 2009, as the last day on which existing stocks of these products can be used.

List of Subjects

Environmental protection, Lindane, Pesticides and pests.

Dated: December 4, 2006.

Debra Edwards,

Director, Special Review and Reregistration Division, Office of Pesticide Programs.

[FR Doc. E6–21101 Filed 12–12–06; 8:45 am]

BILLING CODE 6560–50–S

ENVIRONMENTAL PROTECTION AGENCY

[FRL–8254–8]

Clean Water Act Section 303(d): Availability of 10 Total Maximum Daily Loads (TMDLs)

AGENCY: Environmental Protection Agency (EPA).

ACTION: Notice of availability.

SUMMARY: This notice announces the availability of the administrative record file for comment on 10 TMDLs and the calculations for these TMDLs prepared by EPA Region 6 for waters listed in the state of Arkansas under section 303(d) of the Clean Water Act (CWA). These TMDLs were completed in response to the lawsuit styled *Sierra Club, et al.* v. *Browner, et al.,* No. LR–C–99–114.

DATES: Comments must be submitted in writing to EPA on or before January 12, 2007.

ADDRESSES: Comments on the 10 TMDLs should be sent to Ms. Diane Smith, Environmental Protection Specialist, Water Quality Protection Division, U.S. Environmental Protection Agency Region 6, 1445 Ross Ave., Dallas, TX 75202–2733, facsimile (214) 665–7373, or e-mail: *smith.diane@epa.gov.* For further information, contact Diane Smith at (214) 665–2145. Documents from the administrative record file for these TMDLs are available for public inspection at this address as well. Documents from the administrative record file may be viewed at *http://www.epa.gov/region6/6wq/npdes/tmdl/index.htm,* or obtained by calling (214) 665–2145 or writing Ms. Smith at the above address. Please contact Ms. Smith to schedule an inspection.

FOR FURTHER INFORMATION CONTACT: Diane Smith at (214) 665–2145.

SUPPLEMENTARY INFORMATION: In 1999, five Arkansas environmental groups, the Sierra Club, Federation of Fly Fishers, Crooked Creek Coalition, Arkansas Fly Fishers, and Save our Streams (plaintiffs), filed a lawsuit in Federal Court against the EPA, styled *Sierra Club, et al.* v. *Browner, et al.,* No. LR–C–99–114. Among other claims, plaintiffs alleged that EPA failed to establish Arkansas TMDLs in a timely manner. EPA proposes these TMDLs pursuant to a consent decree entered in this lawsuit.

EPA Seeks Comments on 10 TMDLs

By this notice EPA is seeking comment on the following 10 TMDLs for waters located within the state of Arkansas:

Segment-Reach	Waterbody Name	Pollutant
08020203–625	Bear Creek Lake	Nutrient.
08020203	Horseshoe Lake	Nutrient.
08020204	Mallard Lake	Nutrient.
08020302	Frierson Lake	Turbidity.
08020303	Old Town Lake	Nutrient.
08040203–904	Big Creek	CBOD and Ammonia.
08050002	Grand Lake	Nutrient.
11110204	Spring Lake	Mercury.
11140201	First Old River Lake	Nutrient.

EPA requests that the public provide to EPA any water quality related data and information that may be relevant to the calculations for these 10 TMDLs. EPA will review all data and information submitted during the public comment period and revise the TMDLs and determinations where appropriate. EPA will then forward the TMDLs to the Arkansas Department of Environmental Quality (ADEQ). The ADEQ will incorporate the TMDLs into its current water quality management plan.

Dated: December 6, 2006.

James R. Brown,

P.G., Acting Division Director, Water Quality Protection Division, Region 6.

[FR Doc. E6–21200 Filed 12–12–06; 8:45 am]

BILLING CODE 6560–50–P

FEDERAL COMMUNICATIONS COMMISSION

Notice of Public Information Collection(s) Being Submitted for Review to the Office of Management and Budget

November 30, 2006.

SUMMARY: The Federal Communications Commission, as part of its continuing effort to reduce paperwork burden invites the general public and other Federal agencies to take this opportunity to comment on the

following information collection(s), as required by the Paperwork Reduction Act (PRA) of 1995, Public Law 104–13. An agency may not conduct or sponsor a collection of information unless it displays a currently valid control number. No person shall be subject to any penalty for failing to comply with a collection of information subject to the Paperwork Reduction Act (PRA) that does not display a valid control number. Comments are requested concerning (a) whether the proposed collection of information is necessary for the proper performance of the functions of the Commission, including whether the information shall have practical utility; (b) the accuracy of the Commission's burden estimate; (c) ways to enhance the quality, utility, and clarity of the information collected; and (d) ways to minimize the burden of the collection of information on the respondents, including the use of automated collection techniques or other forms of information technology.

DATES: Written Paperwork Reduction Act (PRA) comments should be submitted on or before January 12, 2007. If you anticipate that you will be submitting PRA comments but find it difficult to do so within the period of time allowed by this notice, you should advise the FCC contact listed below as soon as possible.

ADDRESSES: Direct all PRA comments to Allison E. Zaleski, Office of Management and Budget, Room 10236 NEOB, Washington, DC 20503, (202) 395–6466, or via fax at (202) 395–5167 or via Internet at *Allison_E._Zaleski@eop.omb.gov* and to *Leslie_F._Smith@fcc.gov*, Federal Communications Commission, Room 1–C216, 445 12th Street, SW., Washington, DC 20554, or an e-mail to *PRA@fcc.gov*. If you would like to obtain or view a copy of this information collection, you may do so by visiting the FCC PRA Web page at: *http://www.fcc.gov/omd/pra*.

FOR FURTHER INFORMATION CONTACT: For additional information or copies of the information collection(s), contact Leslie F. Smith at (202) 418–0217 or via the Internet at *Leslie.Smith@fcc.gov*.

SUPPLEMENTARY INFORMATION:

OMB Control Number: 3060–0773.

Title: Section 2.803, Marketing of RF Devices Prior to Equipment Authorization.

Form Number: N/A.

Type of Review: Extension of a currently approved collection.

Respondents: Businesses or other for-profit entities.

Number of Respondents: 6,000.

Estimated Time per Response: 0.5 hours.

Frequency of Response: One time and on occasion reporting requirements; Third party disclosure.

Obligation To Respond: Required to obtain or retain benefits.

Total Annual Burden: 3,000 hours.

Total Annual Costs: N/A.

Nature and Extent of Confidentiality: There is no need for confidentiality.

Privacy Act Impact Assessment: No impact(s).

Needs and Uses: FCC rules permit the display and advertising of radio frequency (RF) devices prior to equipment authorization or to a determination of compliance, providing that the advertising or display contains a conspicuous notice as specified at 47 CFR 2.803(c). A notice must also accompany RF prototype equipment devices offered for sale, as stated in 47 CFR 2.803(c)(1), prior to equipment authorization or to a showing of compliance, that the equipment is a prototype and is not for sale. This information informs third parties of the FCC's requirement for the responsible party to comply with its rules.

Federal Communications Commission.

Marlene H. Dortch,

Secretary.

[FR Doc. E6–20907 Filed 12–12–06; 8:45 am]

BILLING CODE 6712–01–P

FEDERAL COMMUNICATIONS COMMISSION

Notice of Public Information Collection(s) Being Reviewed by the Federal Communications Commission for Extension Under Delegated Authority

December 5, 2006.

SUMMARY: The Federal Communications Commission, as part of its continuing effort to reduce paperwork burden invites the general public and other Federal agencies to take this opportunity to comment on the following information collection(s), as required by the Paperwork Reduction Act (PRA) of 1995, Public Law 104–13. An agency may not conduct or sponsor a collection of information unless it displays a currently valid control number. No person shall be subject to any penalty for failing to comply with a collection of information subject to the Paperwork Reduction Act that does not display a valid control number. Comments are requested concerning (a) whether the proposed collection of information is necessary for the proper performance of the functions of the Commission, including whether the information shall have practical utility; (b) the accuracy of the Commission's burden estimate; (c) ways to enhance the quality, utility, and clarity of the information collected; and (d) ways to minimize the burden of the collection of information on the respondents, including the use of automated collection techniques or other forms of information technology.

DATES: Written Paperwork Reduction Act (PRA) comments should be submitted on or before February 12, 2007. If you anticipate that you will be submitting comments, but find it difficult to do so within the period of time allowed by this notice, you should advise the contact listed below as soon as possible.

ADDRESSES: You may submit your all Paperwork Reduction Act (PRA) comments by e-mail or U.S. postal mail. To submit your comments by e-mail send them to *PRA@fcc.gov*. To submit your comments by U.S. mail, mark them to the attention of Cathy Williams, Federal Communications Commission, Room 1–C823, 445 12th Street, SW., Washington, DC 20554.

FOR FURTHER INFORMATION CONTACT: For additional information about the information collection(s) send an e-mail to *PRA@fcc.gov* or contact Cathy Williams at (202) 418–2918.

SUPPLEMENTARY INFORMATION:

OMB Control Number: 3060–1040.

Title: Broadcast Ownership Rules, Report and Order in MB Docket No. 02–277 and MM Docket Nos. 02–235, 02–327 and 00–244.

Form Number: Not applicable.

Type of Review: Extension of a currently approved collection.

Respondents: Business or other for-profit entities.

Number of Respondents: 12.

Estimated Time per Response: 2–10 hours.

Frequency of Response: One-time reporting requirement.

Obligation to Respond: Required to obtain and retain benefits.

Total Annual Burden: 12 hours.

Total Annual Cost: None.

Privacy Impact Assessment: No impact(s).

Nature and Extend of Confidentiality: There is no need for confidentiality.

Needs and Uses: On June 2, 2003, the Commission adopted a Report and Order and Notice of Proposed Rulemaking (R&O), In the Matter of 2002 Biennial Regulatory Review—Review of the Commission's Broadcast Ownership Rules and Other Rules Adopted Pursuant to Section 202 of the Telecommunications Act of 1996, MM Docket No. 02–277, Cross Ownership of Broadcast Stations and Newspapers, MM Docket No. 01–235, Rules and

Policies Concerning Multiple Ownership of Radio Broadcast Stations in Local Markets, MM Docket No. 01–317, Definition of Radio Markets, MM Docket No. 00–244, and Definition of Radio Markets for Areas Not Located in an Arbitron Survey Areas Not Located in an Arbitron Survey Area, MB Docket No. 03–130, FCC 03–127. That R&O contained several one-time reporting requirements which were outside of form collections, affecting licensees with temporary waivers, conditional waivers, pending waiver requests, extensions of waiver, or requests for permanent waivers of the broadcast ownership rules. These reporting requirements were adopted to ensure compliance with the new broadcast ownership rules and to ensure the rules' effectiveness.

Federal Communications Commission.

Marlene H. Dortch,

Secretary.

[FR Doc. E6–20997 Filed 12–12–06; 8:45 am]

BILLING CODE 6712–10–P

FEDERAL COMMUNICATIONS COMMISSION

Notice of Public Information Collection(s) Being Submitted for Review to the Office of Management and Budget

December 1, 2006.

SUMMARY: The Federal Communications Commission, as part of its continuing effort to reduce paperwork burden invites the general public and other Federal agencies to take this opportunity to comment on the following information collection(s), as required by the Paperwork Reduction Act (PRA) of 1995, Public Law 104–13. An agency may not conduct or sponsor a collection of information unless it displays a currently valid control number. No person shall be subject to any penalty for failing to comply with a collection of information subject to the Paperwork Reduction Act (PRA) that does not display a valid control number. Comments are requested concerning (a) whether the proposed collection of information is necessary for the proper performance of the functions of the Commission, including whether the information shall have practical utility; (b) the accuracy of the Commission's burden estimate; (c) ways to enhance the quality, utility, and clarity of the information collected; and (d) ways to minimize the burden of the collection of information on the respondents, including the use of automated collection techniques or other forms of information technology.

DATES: Written Paperwork Reduction Act (PRA) comments should be submitted on or before January 12, 2007. If you anticipate that you will be submitting PRA comments, but find it difficult to do so within the period of time allowed by this notice, you should advise the FCC contact listed below as soon as possible.

ADDRESSES: Direct all PRA comments to Allison E. Zaleski, Office of Management and Budget, Room 10236 NEOB, Washington, DC 20503, (202) 395–6466, or via fax at 202–395–5167 or via Internet at *Allison_E._Zaleski@eop.omb.gov* and to *Judith-B.Herman@fcc.gov*, Federal Communications Commission, Room 1–B441, 445 12th Street, SW., Washington, DC 20554 or an e-mail to *PRA@fcc.gov*. If you would like to obtain or view a copy of this information collection, you may do so by visiting the FCC PRA Web page at: *http://www.fcc.gov/omd/pra*.

FOR FURTHER INFORMATION CONTACT: For additional information or copies of the information collection(s), contact Judith B. Herman at 202–418–0214 or via the Internet at *Judith-B.Herman@fcc.gov*.

SUPPLEMENTARY INFORMATION: *OMB Control Number:* 3060–0531.

Title: Local Multipoint Distribution Service (LMDS).

Form No.: N/A.

Type of Review: Extension of a currently approved collection.

Respondents: Business or other for-profit.

Number of Respondents: 423 respondents; 423 responses.

Estimated Time per Response: .25–20 hours.

Frequency of Response: On occasion and every 10 year reporting requirements and third party disclosure requirement.

Obligation to Respond: Required to obtain or retain benefits.

Total Annual Burden: 6,394 hours.

Total Annual Cost: $10,800.

Privacy Act Impact Assessment: N/A.

Nature and Extent of Confidentiality: There is no need for confidentiality. Respondents may request materials or information submitted to the Commission be withheld from public inspection under 47 CFR 0.459 of the Commission's rules.

Needs and Uses: The Commission will submit this information collection to OMB as an extension (no change in reporting or third party disclosure requirements) after this 30 day comment period to obtain the full three-year clearance from them.

This collection of information for Local Multipoint Distribution Service (LMDS) is imposed on respondents pursuant to 47 CFR 101.103 and 101.1011.

Pursuant to 47 CFR 101.1011, LMDS licensees must make a showing of substantial service in their license area within ten years of being licensed. A licensee must demonstrate that it provided service which is sound, favorable, and substantially above a level of mediocre service which might minimally warrant renewal.

In order to do so, an LMDS licensee seeking renewal must submit a showing to explain why renewal of the license is warranted. At a minimum, this showing must include: (1) A description of its current service in terms of geographic coverage and population served; (2) an explanation of its record of expansion, including a timetable of new construction to meet changes in demand for service; and (3) copies of all Commission rule or policy and a list of an pending proceedings that relate to any matter described directly above. Renewal applications must be filed once every ten years. The information is used by Commission staff in carrying out its duties to determine the technical, legal and other qualifications of applicants to operate and remain license to operate a station in the LMDS. Specifically, the frequency coordination information requested pursuant to section 101.103 is necessary to facilitate the rendition of communication service on an interference-free basis in each service area. The frequency coordination procedures ensure that LMDS applicants and licensees have the information necessary to cooperate in the selection and use of frequencies assigned in order to minimize interference and thereby obtain the most effective use of the spectrum. The information is also necessary for the Commission to resolve interference conflicts that cannot be settled between or among the affected applicants and licensees. For LMDS licensees seeking renewal, the information requested pursuant to section 101.1011 is necessary for the Commission staff to determine whether a licensee has provided sufficient evidence of substantial service during its license term and has substantially complied with the Communications Act and with applicable Commission rules and policies.

Federal Communications Commission.

Marlene H. Dortch,

Secretary.

[FR Doc. E6–20998 Filed 12–12–06; 8:45 am]

BILLING CODE 6712–01–P

FEDERAL COMMUNICATIONS COMMISSION

Notice of Public Information Collection(s) Being Submitted to OMB for Review and Approval

December 5, 2006.

SUMMARY: The Federal Communications Commissions, as part of its continuing effort to reduce paperwork burden invites the general public and other Federal agencies to take this opportunity to comment on the following information collection, as required by the Paperwork Reduction Act of 1995, Public Law 104–13. An agency may not conduct or sponsor a collection of information unless it displays a currently valid control number. No person shall be subject to any penalty for failing to comply with a collection of information subject to the Paperwork Reduction Act (PRA) that does not display a valid control number. Comments are requested concerning (a) whether the proposed collection of information is necessary for the proper performance of the functions of the Commission, including whether the information shall have practical utility; (b) the accuracy of the Commission's burden estimate; (c) ways to enhance the quality, utility, and clarity of the information collected; and (d) ways to minimize the burden of the collection of information on the respondents, including the use of automated collection techniques or other forms of information technology.

DATES: Written comments should be submitted on or before January 12, 2007. If you anticipate that you will be submitting comments, but find it difficult to do so within the period of time allowed by this notice, you should advise the contact listed below as soon as possible.

ADDRESSES: You may submit your Paperwork Reduction Act (PRA) comments by e-mail or U.S. postal mail. To submit your comments by e-mail send them to *PRA@fcc.gov*. To submit your comments by U.S. mail, mark them to the attention of Cathy Williams, Federal Communications Commission, Room 1–C823, 445 12th Street, SW., Washington, DC 20554 and Allison E. Zaleski, Office of Management and Budget (OMB), Room 10236 NEOB, Washington, DC 20503, (202) 395–6466 or via the Internet at *Allison_E._Zaleski@omb.eop.gov*.

FOR FURTHER INFORMATION CONTACT: For additional information about the information collection(s) send an e-mail to PRA@fcc.gov or contact Cathy Williams at (202) 418–2918. If you would like to obtain a copy of the information collection, you may do so by visiting the FCC PRA Web page at: *http://www.fcc.gov/omd/pra.*

SUPPLEMENTARY INFORMATION: *OMB Control Number:* 3060–0349.

Title: Sections 73.2080, 76.73, 76.75, 76.79, 76.1702, Equal Employment Opportunity (''EEO'') Policy.

Form Number: Not applicable.

Type of Review: Revision of a currently approved collection.

Respondents: Business or other for-profit entities; not-for-profit institutions.

Number of Respondents: 14,178.

Estimated Time per Response: 42 hours.

Frequency of Response: Recordkeeping requirement; Annual reporting requirement; Every five-year reporting requirement.

Obligation to Respond: Required to obtain or retain benefits.

Total Annual Burden: 595,476 hours.

Total Annual Cost: None.

Privacy Impact Assessment: No impact(s).

Nature and Extent of Confidentiality: There is no need for confidentiality.

Needs and Uses: 47 CFR 73.2080 provides that equal opportunity in employment shall be afforded by all broadcast stations to all qualified persons and no person shall be discriminated against in employment by such stations because of race, color, religion, national origin or sex.

This section also requires that each broadcast station employment unit with 5 or more full-time employees shall establish, maintain and carry out a program to assure equal opportunity in every aspect of a broadcast station's policy and practice.

Section 76.73 provides that equal opportunity in employment shall be afforded by all multichannel video program distributors (''MVPD'') to all qualified persons and no person shall be discriminated against in employment by such entities because of race, color, religion, national origin, age or sex.

Section 76.75 requires that each MVPD employment unit shall establish, maintain and carry out a program to assure equal opportunity in every aspect of a cable entity's policy and practice.

Section 76.79 requires that every MVPD employment unit maintain, for public inspection, a file containing copies of all annual employment reports and related documents.

Section 76.1702 requires that every MVPD place certain information concerning its EEO program in the public inspection file.

Federal Communications Commission.

Marlene H. Dortch,

Secretary.

[FR Doc. E6–21000 Filed 12–12–06; 8:45 am]

BILLING CODE 6712–01–P

FEDERAL COMMUNICATIONS COMMISSION

Notice of Public Information Collection(s) Being Submitted for Review to the Office of Management and Budget

December 5, 2006.

SUMMARY: The Federal Communications Commission, as part of its continuing effort to reduce paperwork burden invites the general public and other Federal agencies to take this opportunity to comment on the following information collection(s), as required by the Paperwork Reduction Act (PRA) of 1995, Public Law 104–13. An agency may not conduct or sponsor a collection of information unless it displays a currently valid control number. No person shall be subject to any penalty for failing to comply with a collection of information subject to the Paperwork Reduction Act (PRA) that does not display a valid control number. Comments are requested concerning (a) whether the proposed collection of information is necessary for the proper performance of the functions of the Commission, including whether the information shall have practical utility; (b) the accuracy of the Commission's burden estimate; (c) ways to enhance the quality, utility, and clarity of the information collected; and (d) ways to minimize the burden of the collection of information on the respondents, including the use of automated collection techniques or other forms of information technology.

DATES: Written Paperwork Reduction Act (PRA) comments should be submitted on or before January 12, 2007. If you anticipate that you will be submitting PRA comments, but find it difficult to do so within the period of time allowed by this notice, you should advise the FCC contact listed below as soon as possible.

ADDRESSES: Direct all PRA comments to Allison E. Zaleski, Office of Management and Budget, Room 10236 NEOB, Washington, DC 20503, (202) 395–6466, or via fax at (202) 395–5167 or via Internet at *Allison_E._Zaleski@eop.omb.gov* and to *Leslie_F._Smith@fcc.gov*, Federal Communications Commission, Room 1–C216, 445 12th Street, SW., Washington, DC 20554, or an e-mail to *PRA@fcc.gov*. If you would like to

obtain or view a copy of this information collection, you may do so by visiting the FCC PRA Web page at: *http://www.fcc.gov/omd/pra*.

FOR FURTHER INFORMATION CONTACT: For additional information or copies of the information collection(s), contact Leslie F. Smith at (202) 418–0217 or via the Internet at *Leslie.Smith@fcc.gov*.

SUPPLEMENTARY INFORMATION: *OMB Control Number:* 3060–0059.

Title: Statement Regarding the Importation of Radio Frequency Devices Capable of Harmful Interference, FCC Form 740.

Form Number: FCC 740.

Type of Review: Extension of a currently approved collection.

Respondents: Business or other for-profit entities.

Number of Respondents: 5,000.

Estimated Time per Response: 1–5 minutes.

Frequency of Response: One time and on occasion reporting requirement; Third party disclosure.

Obligation To Respond: Required to obtain or retain benefits.

Total Annual Burden: 29,120 hours.

Total Annual Costs: None.

Nature and Extent of Confidentiality: There are no confidentiality issues.

Privacy Act Impact Assessment: No impact(s).

Needs and Uses: The FCC, working in conjunction with the U.S. Customs Service, is responsible for the regulation of both authorized radio services and devices that can cause interference. FCC Form 740 must be completed for each radio frequency device, which is imported into the United States, and is used to keep non-compliant devices from being distributed to the general public, thereby reducing the potential for harmful interference being caused to authorized communications. FCC Form 740 may be filed on paper or electronically via the FCC's Internet portal.

Federal Communications Commission.

Marlene H. Dortch,

Secretary.

[FR Doc. E6–21001 Filed 12–12–06; 8:45 am]

BILLING CODE 6712–01–P

FEDERAL COMMUNICATIONS COMMISSION

Notice of Public Information Collection(s) Being Submitted for Review to the Office of Management and Budget

December 7, 2006.

SUMMARY: The Federal Communications Commission, as part of its continuing effort to reduce paperwork burden invites the general public and other Federal agencies to take this opportunity to comment on the following information collection(s), as required by the Paperwork Reduction Act (PRA) of 1995, Public Law 104–13. An agency may not conduct or sponsor a collection of information unless it displays a currently valid control number. No person shall be subject to any penalty for failing to comply with a collection of information subject to the Paperwork Reduction Act (PRA) that does not display a valid control number. Comments are requested concerning (a) whether the proposed collection of information is necessary for the proper performance of the functions of the Commission, including whether the information shall have practical utility; (b) the accuracy of the Commission's burden estimate; (c) ways to enhance the quality, utility, and clarity of the information collected; and (d) ways to minimize the burden of the collection of information on the respondents, including the use of automated collection techniques or other forms of information technology.

DATES: Written Paperwork Reduction Act (PRA) comments should be submitted on or before January 12, 2007. If you anticipate that you will be submitting PRA comments, but find it difficult to do so within the period of time allowed by this notice, you should advise the FCC contact listed below as soon as possible.

ADDRESSES: Direct all PRA comments to Allison E. Zaleski, Office of Management and Budget, Room 10236 NEOB, Washington, DC 20503, (202) 395–6466, or via fax at 202–395–5167 or via Internet at *Allison_E._Zaleski@eop.omb.gov* and to *Judith-B.Herman@fcc.gov*, Federal Communications Commission, Room 1–B441, 445 12th Street, SW., Washington, DC 20554 or an e-mail to *PRA@fcc.gov*. If you would like to obtain or view a copy of this information collection, you may do so by visiting the FCC PRA Web page at: *http://www.fcc.gov/omd/pra*.

FOR FURTHER INFORMATION CONTACT: For additional information or copies of the information collection(s), contact Judith B. Herman at 202–418–0214 or via the Internet at *Judith-B.Herman@fcc.gov*.

SUPPLEMENTARY INFORMATION:

OMB Control Number: 3060–0855.

Title: Telecommunications Reporting Worksheet, CC Docket No. 96–45.

Form Nos.: FCC Forms 499–A and 499–Q.

Type of Review: Revision of a currently approved collection.

Respondents: Business or other for-profit and not-for-profit institutions.

Number of Respondents: 5,625 respondents; 17,465 responses.

Estimated Time per Response: 15 hours (average).

Frequency of Response: On occasion, one-time, annual and quarterly reporting requirements, recordkeeping requirement and third party disclosure requirement.

Obligation to Respond: Mandatory.

Total Annual Burden: 263,230 hours.

Total Annual Cost: N/A.

Privacy Act Impact Assessment: N/A.

Nature and Extent of Confidentiality: The Commission will allow respondents to certify that data contained in their submissions are privileged or confidential commercial or financial information and that disclosure of such information would likely cause substantial harm to the competitive position of the entity filing the Worksheet. If the Commission receives a request for or proposes to disclose the information, the respondent would be required to make the full showing pursuant to the Commission's rules for withholding from public inspection information submitted to the Commission. (See 47 CFR 0.459).

Needs and Uses: The Commission will submit this information collection to OMB as a revision during this comment period to obtain the full three-year clearance from them.

The Federal Communications Commission (Commission) requires telecommunications carriers and other providers of telecommunications to contribute to the Universal Service Fund (USF) and other funds. Contribution revenue data, as well as other information, are reported by carriers on FCC Forms 499–A (annual) and 499–Q (quarterly). Accompanying these forms are instructions on how to report revenue. The revisions that are proposed for this information collection will provide clarifications to the 2007 FCC Forms 499–A and 499–Q, and instructions in order to improve the revenue reporting process for respondents. The revisions provide filers with additional information concerning, for example, the reporting of prepaid calling card revenue to reflect clarifications adopted in various Commission orders; the treatment of wireline broadband internet access service revenue as a result of the Commission's Wireline Broadband Internet Access Services Order; and the filing of revenues by VoIP toll providers to reflect the Commission's IP-in-the-Middle Order. The revisions also provide guidance to entities regarding filing of Form 499–A and 499–Q

following the merger of two entities. The forms and instructions also provide additional information on the need for, and use of, e-mail addresses from the filing entities. Other proposed changes to the forms and instructions would help respondents better determine how to report subject revenues and generally seek to provide respondents with an efficient, less burdensome information collection.

The revisions proposed will be minimal or have no effect on the burden associated with filing FCC Forms 499–A and 499–Q for respondents. The revisions proposed in this submission to OMB would go into effect January 31, 2007.

In addition, the 2006 FCC forms and instructions which already reflect the changes to the contribution methodology adopted in the 2006 Interim Contribution Methodology Order should remain in effect until the revised forms become effective January 31, 2007 and should continue to be available thereafter for filers to use in amending prior submissions. On July 27, 2006, the Commission received emergency approval of the information collection requirements in which the Commission made minor editorial corrections of typographical errors or omissions as well as other minor changes to ensure consistency between the forms and the instructions. OMB approval for emergency requests are only granted for six months, thus this collection's OMB approval will expire on 1/31/07. The Commission is now submitting this collection under OMB's regular procedures in order to obtain the full three year clearance from them.

Federal Communications Commission.

Marlene H. Dortch,

Secretary.

[FR Doc. E6–21204 Filed 12–12–06; 8:45 am]

BILLING CODE 6712–01–P

FEDERAL MARITIME COMMISSION

Notice of Agreements Filed

The Commission hereby gives notice of the filing of the following agreements under the Shipping Act of 1984. Interested parties may submit comments on agreements to the Secretary, Federal Maritime Commission, Washington, DC 20573, within ten days of the date this notice appears in the **Federal Register**. Copies of agreements are available through the Commission's Office of Agreements (202–523–5793 or *tradeanalysis@fmc.gov*).

Agreement No.: 010071–033.

Title: Cruise Lines International Association Agreement.

Parties: American Cruise Lines, Inc.; Carnival Cruise Lines; Celebrity Cruises, Inc.; Costa Cruise Lines; Crystal Cruises; Cunard Line; Disney Cruise Line; Holland America Line; MSC Cruises; NCL America; Norwegian Coastal Voyage, Inc./Bergen Line Services; Norwegian Cruise Line; Oceania Cruises; Orient Lines; Princess Cruises; Regent Seven Seas Cruises; Royal Caribbean International; Seabourn Cruise Line; SeaDream Yacht Club; Silversea Cruises, Ltd.; and Windstar Cruises.

Filing Party: Terry Dale, President; Cruise Lines International Association; 80 Broad Street; Suite 1800; New York, NY 10004.

Synopsis: The amendment reflects changes to the Association arising from its consolidation with the International Council of Cruise Lines and CLIA's subsequent incorporation. The amendment also adds NCL America and SeaDream Yacht Club as parties.

Agreement No.: 011574–017.

Title: Pacific Islands Discussion Agreement.

Parties: CMA CGM, SA; Compagnie Maritime Marfret, SA; Hamburg–Süd; Hapag–Lloyd AG; and Polynesia Line Ltd.

Filing Party: Wayne R. Rohde, Esq.; Sher & Blackwell, LLP; 1850 M Street, NW.; Suite 900; Washington, DC 20036.

Synopsis: The amendment removes Australia–New Zealand Direct Line as a party to the agreement.

Agreement No.: 011947–003.

Title: Grimaldi/Sallaum Space Charter Agreement.

Parties: Grimaldi Compagnia di Navigazione and Sallaum Lines SAL.

Filing Party: Wayne R. Rohde, Esq.; Sher & Blackwell LLP; 1850 M Street, NW.; Suite 900; Washington, DC 20036.

Synopsis: The amendment expands the geographic scope of the agreement to cover all ports in West Africa in the Senegal to Angola range.

Agreement No.: 201143–008.

Title: West Coast MTO Agreement.

Parties: APM Terminals Pacific, Ltd.; California United Terminals, Inc.; Eagle Marine Services, Ltd.; International Transportation Service, Inc.; Long Beach Container Terminal, Inc.; Seaside Transportation Service LLC; Trans Pacific Container Service Corporation; Total Terminals LLC; West Basin Container Terminal LLC; Yusen Terminals, Inc.; Pacific Maritime Services, L.L.C.; and SSA Terminal (Long Beach), LLC.

Filing Party: David F. Smith, Esq.; Sher & Blackwell LLP; 1850 M Street, NW.; Suite 900; Washington, DC 20036.

Synopsis: The amendment adds language and new Articles to the agreement to authorize the parties to discuss, agree upon and implement or assist in the implementation of measures to improve air quality in port areas and agree upon, test and implement security related measures, particularly those relating to transportation worker identification credentials.

Dated: December 8, 2006.

By Order of the Federal Maritime Commission.

Bryant L. VanBrakle,

Secretary.

[FR Doc. E6–21179 Filed 12–12–06; 8:45 am]

BILLING CODE 6730–01–P

FEDERAL MARITIME COMMISSION

Ocean Transportation Intermediary License Applicants

Notice is hereby given that the following applicants have filed with the Federal Maritime Commission an application for license as a Non-Vessel–Operating Common Carrier and Ocean Freight Forwarder—Ocean Transportation Intermediary pursuant to section 19 of the Shipping Act of 1984 as amended (46 U.S.C. Chapter 409 and 46 CFR part 515).

Persons knowing of any reason why the following applicants should not receive a license are requested to contact the Office of Transportation Intermediaries, Federal Maritime Commission, Washington, DC 20573.

Non-Vessel–Operating Common Carrier Ocean Transportation Intermediary Applicants:

Transmodal Logistics International Inc., 5520 Minoru Blvd., Suite 202, Richmond, British Columbia, Canada V6X 249.

Officers: Sanjeev Bhalla, Vice President (Qualifying Individual), Dave B. Tangry, President.

ILS Cargo Corp. dba Container Line, 7517–21 NW 52 Street, Miami, FL 33166.

Officers: Placido Sanchez, President (Qualifying Individual), Rafael Mosquera, Vice President.

Non-Vessel–Operating Common Carrier and Ocean Freight Forwarder Transportation Intermediary Applicants:

Cedars Express International, Inc., 8415 Beckford Avenue, Northridge, CA 91324.

Officers: Manal Fouad Guirguis, Vice President (Qualifying Individual), George N. Salloum, President.

Ferrara International Worldwide Inc., 640 Dowd Avenue, Elizabeth, NJ 07201.

Officers: Suzanne Simonetti, Vice President (Qualifying Individual), Nicholas Ferrara, President.

Ocean Freight Forwarder—Ocean Transportation Intermediary Applicants:

Mayfak International, LLC, 1231 NW 93 Ct., Doral, FL 33172.
Officer: Mario Osorio, President (Qualifying Individual).

International Logistics Solutions, Inc., 58 South Burty Road, Piedmont, SC 29673.
Officers: Gavin Berkowitz, Vice President (Qualifying Individual), Chris Apple, President.

Dated: December 8, 2006.

Bryant L. VanBrakle,

Secretary.

[FR Doc. E6–21177 Filed 12–12–06; 8:45 am]

BILLING CODE 6730–01–P

FEDERAL MARITIME COMMISSION

Ocean Transportation Intermediary Licenses Correction

In the OTI Applicant Notice published in the **Federal Register** on November 1, 2006 (71 FR 64281) reference to the name of the Zenus (USA) Logistics LLC is corrected to read: ''Zeus (USA) Logistics LLC''.

Dated: December 8, 2006.

Bryant L. VanBrakle,

Secretary.

[FR Doc. E6–21168 Filed 12–12–06; 8:45 am]

BILLING CODE 6730–01–P

FEDERAL RESERVE SYSTEM

Change in Bank Control Notices; Acquisition of Shares of Bank or Bank Holding Companies

The notificants listed below have applied under the Change in Bank Control Act (12 U.S.C. 1817(j)) and § 225.41 of the Board's Regulation Y (12 CFR 225.41) to acquire a bank or bank holding company. The factors that are considered in acting on the notices are set forth in paragraph 7 of the Act (12 U.S.C. 1817(j)(7)).

The notices are available for immediate inspection at the Federal Reserve Bank indicated. The notices also will be available for inspection at the office of the Board of Governors. Interested persons may express their views in writing to the Reserve Bank indicated for that notice or to the offices of the Board of Governors. Comments must be received not later than December 28, 2006.

A. Federal Reserve Bank of Kansas City (Donna J. Ward, Assistant Vice President) 925 Grand Avenue, Kansas City, Missouri 64198-0001:

1. Raymond E. Wooldridge, Dallas, Texas; to acquire voting shares of Reeves Bancshares, Inc., Gould, Oklahoma, and thereby indirectly acquire voting shares of Stockmans Bank, Altus, Oklahoma.

Board of Governors of the Federal Reserve System, December 8, 2006.

Robert deV. Frierson,

Deputy Secretary of the Board.

[FR Doc. E6–21149 Filed 12–12–06; 8:45 am]

BILLING CODE 6210–01–S

FEDERAL TRADE COMMISSION

Charges For Certain Disclosures

AGENCY: Federal Trade Commission.

ACTION: Notice regarding charges for certain disclosures.

SUMMARY: The Federal Trade Commission announces that the ceiling on allowable charges under Section 612(f) of the Fair Credit Reporting Act (''FCRA'') will remain unchanged at $10.00 for 2007. Under 1996 amendments to the FCRA, the Federal Trade Commission is required to increase the $8.00 amount referred to in paragraph (1)(A)(i) of Section 612(f) on January 1 of each year, based proportionally on changes in the Consumer Price Index (''CPI''), with fractional changes rounded to the nearest fifty cents. The CPI increased 25.88 percent between September 1997, the date the FCRA amendments took effect, and September 2006. This increase in the CPI and the requirement that any increase be rounded to the nearest fifty cents results in no change in the current maximum allowable charge of $10.00.

DATES: *Effective Date:* January 1, 2007.

ADDRESSES: Federal Trade Commission, Washington, DC 20580.

FOR FURTHER INFORMATION CONTACT: Keith B. Anderson, Bureau of Economics, Federal Trade Commission, Washington, DC 20580, 202–326–3428.

SUPPLEMENTARY INFORMATION: Section 612(f)(1)(A) of the Fair Credit Reporting Act, which became effective in 1997, provides that a consumer reporting agency may charge a consumer a reasonable amount for making a disclosure to the consumer pursuant to Section 609 of the Act.[1] The law states that, where a consumer reporting agency is permitted to impose a reasonable charge on a consumer for making a disclosure to the consumer pursuant to Section 609, the charge shall not exceed $8 and shall be indicated to the consumer before making the disclosure. Section 612(f)(2) states that the Federal Trade Commission (''the Commission'') shall increase the $8.00 maximum amount on January 1 of each year, based proportionally on changes in the Consumer Price Index, with fractional changes rounded to the nearest fifty cents.

Section 211(a)(2) of the Fair and Accurate Credit Transactions Act of 2003 (''FACT Act'') added a new Section 612(a) to the FCRA that gives consumers the right to request free annual disclosures once every 12 months. The maximum allowable charge established by this Notice does not apply to requests made under that provision. The charge will, however, apply when a consumer who orders a file disclosure has already received a free annual disclosure and does not otherwise qualify for an additional free disclosure.

The Commission considers the $8 amount referred to in paragraph (1)(A)(i) of Section 612(f) to be the baseline for the effective ceiling on reasonable charges dating from the effective date of the amended FCRA, *i.e.*, September 30, 1997. Each year the Commission calculates the proportional increase in the Consumer Price Index (using the most general CPI, which is for all urban consumers, all items) from September 1997 to September of the current year. The Commission then determines what modification, if any, from the original base of $8 should be made effective on January 1 of the subsequent year, given the requirement that fractional changes be rounded to the nearest fifty cents.

Between September 1997 and September 2006, the Consumer Price Index for all urban consumers and all items increased by 25.88 percent—from an index value of 161.2 in September 1997 to a value of 202.9 in September 2005. An increase of 25.88 percent in the $8.00 base figure would lead to a new figure of $10.07. However, because the statute directs that the resulting figure be rounded to the nearest $0.50, the allowable charge should be $10.00.

The Commission therefore determines that the allowable charge for the year 2007 will remain unchanged at $10.00.

[1] This provision, originally Section 612(a), was added to the FCRA in September 1996 and became effective in September 1997. It was relabeled Section 612(f) by Section 211(a)(1) of the Fair and Accurate Credit Transactions Act of 2003 (''FACT Act''), Public Law 108–159, which was signed into law on December 4, 2003.

By direction of the Commission.

Donald S. Clark,

Secretary.

[FR Doc. E6–21196 Filed 12–12–06; 8:45 am]

BILLING CODE 6750–01–P

DEPARTMENT OF HEALTH AND HUMAN SERVICES

Request for Information (RFI): Improving Health and Accelerating Personalized Health Care Through Health Information Technology and Genomic Information in Population- and Community-based Health Care Delivery Systems; Extension of Comment Period

AGENCY: Office of the Secretary, Department of Health and Human Services.

ACTION: Notice.

SUMMARY: On November 1, 2006, the U.S. Department of Health and Human Services (HHS) issued a notice in the **Federal Register** (FR Doc. Vol 71, No. 211, pages 64282–64284) to request input from the public and private sectors on plans for developing and using resources involving health information technology and genetic and molecular medicine, with specific reference to incorporating these capacities in evidence-based clinical practice, health outcomes evaluations, and research. A 60 day comment period was established upon publication of that notice.

The purpose of this notice is to inform all interested parties that the comment period originally identified in the November 1, 2006 **Federal Register** has been extended for thirty days, in order to maximize the opportunity for interested individuals and organizations to provide comments to HHS on this subject.

DATES: The closing period for the comment period will now be February 5, 2007.

ADDRESSES: Electronic responses are preferred and may be addressed to *PHCRFI@hhs.gov.* Written responses should be addressed to U.S. Department of Health and Human Services, Room 434E, 200 Independence Avenue SW., Washington, DC 20201, Attention: Personalized Health Care RFI.

FOR FURTHER INFORMATION CONTACT: Dr. Gregory Downing, Personalized Health Care Initiative, (202) 260–1911.

SUPPLEMENTARY INFORMATION: A copy of this RFI is available on the HHS Web site at *http://www.aspe.hhs.gov/PHC/rfi*. Please follow the instructions for submitting responses.

Dated: December 6, 2006.

John O. Agwunobi,

Assistant Secretary for Health, Office of Public Health and Science.

[FR Doc. E6–21146 Filed 12–12–06; 8:45 am]

BILLING CODE 4150–28–P

DEPARTMENT OF HEALTH AND HUMAN SERVICES

Centers for Disease Control and Prevention

[60Day-07–07AB]

Proposed Data Collections Submitted for Public Comment and Recommendations

In compliance with the requirement of Section 3506(c)(2)(A) of the Paperwork Reduction Act of 1995 for opportunity for public comment on proposed data collection projects, the Centers for Disease Control and Prevention (CDC) will publish periodic summaries of proposed projects. To request more information on the proposed projects or to obtain a copy of the data collection plans and instruments, call 404–639–5960 and send comments to Seleda Perryman, CDC Assistant Reports Clearance Officer, 1600 Clifton Road, MS–D74, Atlanta, GA 30333 or send an e-mail to *omb@cdc.gov.*

Comments are invited on: (a) Whether the proposed collection of information is necessary for the proper performance of the functions of the agency, including whether the information shall have practical utility; (b) the accuracy of the agency's estimate of the burden of the proposed collection of information; (c) ways to enhance the quality, utility, and clarity of the information to be collected; and (d) ways to minimize the burden of the collection of information on respondents, including through the Use of automated collection techniques or other forms of information technology. Written comments should be received within 60 days of this notice.

Proposed Project

Measuring the Psychological Impact on Communities Affected by Landmines—New—Coordinating Center for Environmental Health and Injury Prevention (CCEHIP), Centers for Disease Control and Prevention (CDC).

Background and Brief Description

The purpose of this project is to conduct an observational baseline survey that assesses the effectiveness of Humanitarian Mine Action (landmine and unexploded ordinance clearance, also known as demining) upon the economic, social and mental well being of impacted communities. This work will be conducted by the Harvard Humanitarian Initiative, a center of Harvard University, under a cooperative agreement with CDC. The general theory to be examined is that individuals and communities in these locations suffer when living in an area with landmines and unexploded ordinance (UXO) since they cannot use all land resources and suffer the trauma of injured or killed family members.

This research on the impact of demining is necessary because landmines and UXO continue to negatively impact civilian populations. For example, it has been estimated that each year landmines and unexploded ordinance lead to the injury and death of 24,000 persons worldwide, predominately civilians. At the same time, it is estimated that civilians account for 35% to 65% of war-related deaths and injuries. The use of landmines and UXO is ongoing, and therefore this issue merits continued attention.

Up to this point, however, little if any of the international response to landmines has studied the economic, social, and mental impact upon a community. Instead the focus has been their physical impact in terms of numbers of injured and killed. There are not statistics nor is there research that can accurately capture these alternative measures of impact. There now exists an opportunity for further research that will benefit the general public as well as the organizations and governments working with persons impacted by landmines and UXO.

The proposed work will allow CDC to continue its commitment to reduce the negative health impact posed by landmines and unexploded ordinance, both for U.S. and non-U.S.-based populations. Specific activities for this project include:

a. Identify and incorporate public health principles into the planning of a pilot study for assessing the impact of landmine and unexploded ordinance (UXO) abatement (also known as demining) on the economic, social and mental health of contaminated communities. This initial research in three or more locations will lay the groundwork for further study in additional sites around the world.

b. Develop the survey instrument and design a study that will assess the economic, social and mental health consequences of living in areas where landmines and UXO are present and the impact if they are cleared.

c. Collect and analyze data in order to draw conclusions and describe key findings that can be presented to the mine action community, which consists of United Nations (UN), governmental and non-governmental organizations (NGOs) focused on reducing the negative impact of mines and unexploded ordinance.

d. Develop materials and strategies for the wide dissemination of findings from the study. Organizations making up the mine action community will benefit from the ability to incorporate results (such as what practices alleviate negative social impacts on a community) of the research into their current practices.

e. Identify and understand all critical aspects of the demining or abatement process, which includes the proper procedures and techniques for demining, the distinction between humanitarian and military demining, a thorough understanding of international standards for demining, and the ability to critically evaluate the quality of demining programs and their work.

f. The work will be conducted in one country per year for a total of five years, depending upon available funding. The likely countries are: Angola, Bosnia, Colombia, Lebanon, and Nepal.

There are no costs to respondents except their time to participate in the survey.

Annualized Burden Hours:

Respondents	Number of respondents per year	Number of responses/ respondent	Avg. burden per response (in hrs.)	Total annual burden (in hrs.)
Persons Identified Annually in each Country	1580	1	1	1580

Dated: December 7, 2006.

Joan F. Karr,

Acting Reports Clearance Officer, Centers for Disease Control and Prevention.

[FR Doc. E6–21192 Filed 12–12–06; 8:45 am]

BILLING CODE 4163–18–P

DEPARTMENT OF HEALTH AND HUMAN SERVICES

Centers for Disease Control and Prevention

Advisory Committee to the Director (ACD), Centers for Disease Control and Prevention: Teleconference

In accordance with section 10(a)(2) of the Federal Advisory Committee Act (Pub. L. 92–463), the Centers for Disease Control and Prevention (CDC) announces the aforementioned Advisory Committee meeting.

Time and Date: 4 p.m.–5 p.m. Eastern Standard Time, December 14, 2006.

Place: The conference call will originate at the Centers for Disease Control and Prevention, 1600 Clifton Road, Atlanta, GA 30333. Please see ''Supplementary Information'' for details on accessing the conference call.

Status: Open to the public, limited only by the availability of telephone ports.

Purpose: The committee will provide advice to the CDC Director on policy issues and broad strategies that will enable CDC, the Nation's prevention agency, to fulfill its mission of promoting health and quality of life by preventing and controlling disease, injury, and disability.

Matters To Be Discussed: The committee will review and discuss recommendations submitted by the Health Disparities Subcommittee, ACD and the Ethics Subcommittee, ACD. Agenda items are subject to change as priorities dictate.

Supplementary Information: This conference call is scheduled to begin at 4:00 p.m., Eastern Standard Time. To participate in the conference call, please dial 1–888–577–8993 and reference passcode ''Public Health''.

As provided under 41 CFR 102–3.150(b), the public health urgency of this agency business requires that the meeting be held prior to the first available date for publication of this notice in the **Federal Register**.

Contact Person For More Information: Lynn Austin, PhD, Executive Secretary, Advisory Committee to the Director, CDC, 1600 Clifton Road, NE, M/S D–14, Atlanta, Georgia 30333. Telephone 404–639–7000.

The Director, Management Analysis and Services Office, has been delegated the authority to sign **Federal Register** notices pertaining to announcements of meetings and other committee management activities, for both CDC and the Agency for Toxic Substances and Disease Registry.

Dated: December 7, 2006.

Alvin Hall,

Director, Management Analysis and Services Office, Centers for Disease Control and Prevention.

[FR Doc. E6–21270 Filed 12–12–06; 8:45 am]

BILLING CODE 4163–18–P

DEPARTMENT OF HEALTH AND HUMAN SERVICES

Centers For Medicare & Medicaid Services

Privacy Act of 1974; Report of New System of Records

AGENCY: Department of Health and Human Services (HHS), Centers for Medicare & Medicaid Services (CMS).

ACTION: Notice of a new system of records.

SUMMARY: In accordance with the requirements of the Privacy Act of 1974, CMS is proposing to establish a new system of records (SOR) titled ''Medicare Integrated Data Repository (IDR),'' System No. 09–70–0571. In December 2003, Congress passed the Medicare Prescription Drug, Improvement, and Modernization Act of 2003 (MMA) (Pub. L. 108–173), that amends Title XVIII of the Social Security Act (the Act) by adding Part D, the voluntary prescription drug benefit program.

The IDR will provide an organized structure for reaching the data through a consistent application of access policies, processes and procedures, common services, governance, and framework. The IDR will integrate and load data from various CMS systems consisting of Medicare Parts A, B, C, and D entitlement, enrollment and utilization data. It is proposed that the IDR will also contain demographic information on Medicaid beneficiaries, Medicare providers and physicians, and employer plans that are receiving a subsidy from CMS for providing creditable drug coverage to their retirees. It is through the integration of this data with other data (e.g., historic data, Part A and Part B data) that the IDR will have value for quality improvement, research on outcomes and effectiveness of drugs, post-market surveillance, and other analytic efforts.

The primary purpose of this system is to establish an enterprise resource that will provide one integrated view of all CMS data to administer the Medicare and Medicaid programs. Information retrieved from this system of records will also be disclosed to: (1) Support regulatory, reimbursement, and policy functions performed within the agency or by a contractor, consultant or CMS grantee; (2) assist another Federal or state agency, agency of a state government, an agency established by state law, or its fiscal agent; (3) support providers and suppliers of services for administration of Title XVIII; (4) assist third parties where the contact is expected to have information relating to the individual's capacity to manage his

or her own affairs; (5) assist Medicare Advantage Plans and Part D Prescription Drug Plans; (6) support Quality Improvement Organizations (QIO); (7) assist other insurers for processing individual insurance claims; (8) facilitate research on the quality and effectiveness of care provided, as well as payment related projects; (9) support litigation involving the agency; and (10) combat fraud, waste, and abuse in certain health benefits programs. We have provided background information about the new system in the **SUPPLEMENTARY INFORMATION** section below. Although the Privacy Act requires only that CMS provide an opportunity for interested persons to comment on the routine uses, CMS invites comments on all portions of this notice. See *Effective Dates* section for comment period.

DATES: *Effective Date:* CMS filed a new SOR report with the Chair of the House Committee on Government Reform and Oversight, the Chair of the Senate Committee on Homeland Security & Governmental Affairs, and the Administrator, Office of Information and Regulatory Affairs, Office of Management and Budget (OMB) on 11/28/2006. To ensure that all parties have adequate time in which to comment, the new system will become effective 30 days from the publication of the notice, or 40 days from the date it was submitted to OMB and the congress, whichever is later. We may defer implementation of this system or one or more of the routine use statements listed below if we receive comments that persuade us to defer implementation.

ADDRESSES: The public should address comments to the CMS Privacy Officer, Division of Privacy Compliance, Enterprise Architecture and Strategy Group, Office of Information Services, CMS, Mailstop N2–04–27, 7500 Security Boulevard, Baltimore, Maryland 21244–1850. Comments received will be available for review at this location, by appointment, during regular business hours, Monday through Friday from 9 a.m.–3 p.m., eastern daylight time.

FOR FURTHER INFORMATION CONTACT:

Robyn Thomas, Director, Division of Business Analysis & Operations, Enterprise Databases Group, Office of Information Services, CMS, Room N1–14–08, 7500 Security Boulevard, Baltimore, Maryland 21244–1850. The telephone number is 410–786–6063 or contact *robyn.thomas@cms.hhs.gov*.

SUPPLEMENTARY INFORMATION:

In December 2003, Congress passed the Medicare Prescription Drug, Improvement, and Modernization Act, amending the Act by adding Part D under Title XVIII. Under the new Medicare benefit, prescription drug coverage is available to everyone with Medicare, regardless of income or health status. CMS maintains numerous systems housing Medicare beneficiary Parts A, B, C and D entitlement, enrollment, and utilization information. Additionally, CMS maintains data on physicians, providers, employer plans, Medicaid recipients and Medicare secondary payers. Implementation of provisions of the MMA requires that CMS develop and maintain databases and systems to manage the enrollment of individuals in the drug benefit or subsidy assistance programs, pay prescription drug plans, evaluate the quality of the new prescription drug benefit, support drug research, provide better access to data, and provide opportunities for other government and research organizations to improve healthcare for the public.

In order to more efficiently and effectively carry out the requirements of CMS's various program areas, data must be available to meet regulatory requirements and support research. Better access to data from all CMS healthcare programs will provide opportunities for other government and research organizations to use this same source data in their efforts to improve healthcare for the public. There are a large number of data sources, extraction tools, and access mechanisms. Users of the data often experience inconsistent, untimely, or duplicated information. The IDR will be an enterprise resource that will provide one integrated view of the data to all of CMS and its partners providing a single authoritative source of information and providing quality and timely data. Additionally, the IDR will contain protections that will maintain the privacy of beneficiaries and providers. Data will most frequently be retrieved by health insurance claim account number, provider or physician identification number, State of residence, or date of service. Such protections will consist of, but are not limited to, identity management, authentication, encrypted identifiers, governance roles, and personally identifiable and non-personally identifiable data stores.

The data collected and maintained in this system are retrieved from the following databases: Medicare Drug Data Processing System, System No. 09–70–0553 (70 FR 58436 (October 6, 2005)); Medicare Beneficiary Database, System No. 09–70–0536 (71 FR 11425 (March 7, 2006)); Medicare Advantage Prescription Drug System, System No. 09–70–4001 (70 FR 60530 (October 18, 2005)); Medicaid Statistical Information System, System No. 09–70–0541 (71 FR 65527 (November 8, 2006)); Retiree Drug Subsidy Program, System No. 09–70–0550 (70 FR 41035 (July 15, 2005)); Common Working File, System No. 09–70–0526 (71 FR 64955 (November 6, 2006)); National Claims History, System No. 09–70–0005 (67 FR 57015 (September 6, 2002)); Enrollment Database, System No. 09–70–0502 (67 FR 3203 (January 23, 2002)); Multi-Carrier Claims System (formerly known as the Carrier Medicare Claims Record), System No. 09–70–0501 (71 FR 64968 (November 6, 2006)); Fiscal Intermediary Shared System (formerly known as the Intermediary Medicare Claims Record), System No. 09–70–0503 (71 FR 64961 (November 6, 2006)); Unique Physician/Provider Identification Number, System No. 09–70–0525, (69 FR 75316 (December 16, 2004)); Medicare Supplier Identification File, System No. 09–70–0530 (71 FR 65527 (November 8, 2006).

I. Description of the Proposed System of Records

A. Statutory and Regulatory Basis for System

Authority for the collection of data maintained in this system is given under section 226, 226A, 1811, 1818, 1818A, 1831, 1833(a)(1)(A), 1836, 1837, 1838, 1843, 1866, 1874a, 1875, 1876, 1881, and 1902(a)(6) of the Social Security Act (the Act). The following are the corresponding sections from Title 42 of the United States Code (U.S.C.): 426, 426–1, 1395c, 1395i–2, 1395i–2a, 1395j, 1395l(a)(1)(A), 1395o, 1395p, 1395q, 1395v, 1395cc, 1395kk–l, 1395ll, 1395mm, 1395rr, 1396a(a)(6), and section 101 of the Medicare Prescription Drug, Improvement, and Modernization Act of 2003 (MMA) (Pub. L. 108–173), which established the Medicare Part D program.

B. Collection and Maintenance of Data in the System

This system will maintain information on Medicare beneficiaries Parts A, B, C, and D and physicians, providers, employer plans, Medicaid recipients and Medicare secondary payers.

Information maintained in the system include, but are not limited to: Standard data for identification such as health insurance claim number, social security number, gender, race/ethnicity, date of birth, geographic location, Medicare enrollment and entitlement information, MSP data necessary for appropriate Medicare claim payment, hospice election, MA plan elections and enrollment, End Stage Renal Disease

(ESRD) entitlement, historic and current listing of residences, and Medicare eligibility and Managed Care institutional status.

II. Agency Policies, Procedures, and Restrictions on The Routine Use

A. The Privacy Act permits us to disclose information without an individual's consent if the information is to be used for a purpose that is compatible with the purpose(s) for which the information was collected. Any such disclosure of data is known as a ''routine use.'' The government will only release IDR information that can be associated with an individual as provided for under ''Section III. Proposed Routine Use Disclosures of Data in the System.'' Both identifiable and non-identifiable data may be disclosed under a routine use.

We will only disclose the minimum personal data necessary to achieve the purpose of IDR. CMS has the following policies and procedures concerning disclosures of information that will be maintained in the system. In general, disclosure of information from the system will be approved only for the minimum information necessary to accomplish the purpose of the disclosure and only after CMS:

1. Determines that the use or disclosure is consistent with the reason that the data is being collected, *e.g.*, to assist in a variety of health care initiatives with other entities related to the evaluation and study of the operation and effectiveness of the Medicare program.

2. *Determines that:*

a. The purpose for which the disclosure is to be made can only be accomplished if the record is provided in individually identifiable form;

b. The purpose for which the disclosure is to be made is of sufficient importance to warrant the effect and/or risk on the privacy of the individual that additional exposure of the record might bring; and

c. There is a strong probability that the proposed use of the data would in fact accomplish the stated purpose(s).

3. *Requires the information recipient to:*

a. Establish administrative, technical, and physical safeguards to prevent unauthorized use of disclosure of the record;

b. Remove or destroy at the earliest time all individually-identifiable information; and

c. Agree to not use or disclose the information for any purpose other than the stated purpose under which the information was disclosed.

4. Determines that the data are valid and reliable.

III. Proposed Routine Use Disclosures of Data in the System

A. The Privacy Act allows us to disclose information without an individual's consent if the information is to be used for a purpose that is compatible with the purpose(s) for which the information was collected. Any such compatible use of data is known as a ''routine use.'' The proposed routine uses in this system meet the compatibility requirement of the Privacy Act. We are proposing to establish the following routine use disclosures of information maintained in the system:

1. To support agency contractors, consultants or grantees who have been engaged by the agency to assist in the performance of a service related to this system and who need to have access to the records in order to perform the activity.

We contemplate disclosing information under this routine use only in situations in which CMS may enter into a contractual or similar agreement with a third party to assist in accomplishing CMS functions relating to purposes for this system.

CMS occasionally contracts out certain of its functions when doing so would contribute to effective and efficient operations. CMS must be able to give a contractor, consultant or grantee whatever information is necessary for the contractors, consultants or grantees to fulfill its duties. In these situations, safeguards are provided in the contract prohibiting the contractor, consultant or grantee from using or disclosing the information for any purpose other than that described in the contract and requires the contractor, consultant or grantee to return or destroy all information at the completion of the contract.

2. *To assist another Federal or state agency, agency of a state government, an agency established by state law, or its fiscal agent to:*

a. Contribute to the accuracy of CMS' proper payment of Medicare benefits,

b. Enable such agency to administer a Federal health benefits program, or as necessary to enable such agency to fulfill a requirement of a Federal statute or regulation that implements a health benefits program funded in whole or in part with Federal funds, and/or

c. Assist Federal/state Medicaid programs within the state.

Other Federal or state agencies in their administration of a Federal health program may require IDR information in order to support evaluations and monitoring of Medicare claims information of beneficiaries, including proper reimbursement for services provided.

The Internal Revenue Service may require IDR data for the application of tax penalties against employers and employee organizations that contribute to Employer Group Health Plans or Large Group Health Plans that are not in compliance with 42 U.S.C. 1395y(b).

In addition, other state agencies in their administration of a Federal health program may require IDR information for the purpose of determining, evaluating and/or assessing cost effectiveness, and/or the quality of health care services provided in the state.

The Railroad Retirement Board requires IDR information to administer provisions of the Railroad Retirement Act and Social Security Act relating to railroad employment and/or the administration of the Medicare program.

The Social Security Administration requires IDR data to enable them to assist in the implementation and maintenance of the Medicare program.

Disclosure under this routine use shall be used by state Medicaid agencies pursuant to agreements with HHS for determining Medicaid and Medicare eligibility, for quality control studies, for determining eligibility of recipients of assistance under Titles IV, XVIII, and XIX of the Act, and for the administration of the Medicaid program. Data will be released to the state only on those individuals who are patients under the services of a Medicaid program within the state who are residents of that state.

3. To support providers and suppliers of services directly or through fiscal intermediaries or carriers for the administration of Title XVIII of the Act.

Providers and suppliers of services require IDR information in order to establish the validity of evidence or to verify the accuracy of information presented by the individual, as it concerns the individual's entitlement to benefits under the Medicare program, including proper reimbursement for services provided.

4. To assist third party contact in situations where the party to be contacted has, or is expected to have information relating to the individual's capacity to manage his or her affairs or to his or her eligibility for, or an entitlement to, benefits under the Medicare program and;

a. The individual is unable to provide the information being sought (an individual is considered to be unable to provide certain types of information when any of the following conditions exists: The individual is confined to a

mental institution, a court of competent jurisdiction has appointed a guardian to manage the affairs of that individual, a court of competent jurisdiction has declared the individual to be mentally incompetent, or the individual's attending physician has certified that the individual is not sufficiently mentally competent to manage his or her own affairs or to provide the information being sought, the individual cannot read or write, cannot afford the cost of obtaining the information, a language barrier exist, or the custodian of the information will not, as a matter of policy, provide it to the individual), or

b. The data are needed to establish the validity of evidence or to verify the accuracy of information presented by the individual, and it concerns one or more of the following: The individual's entitlement to benefits under the Medicare program, the amount of reimbursement, and in cases in which the evidence is being reviewed as a result of suspected fraud, waste, and abuse, program integrity, quality appraisal, or evaluation and measurement of activities.

Third parties contacts require IDR information in order to provide support for the individual's entitlement to benefits under the Medicare program; to establish the validity of evidence or to verify the accuracy of information presented by the individual, and assist in the monitoring of Medicare claims information of beneficiaries, including proper reimbursement of services provided.

5. To assist Medicare Advantage Plans, Part D Prescription Drug Plans and their Prescription Drug Event submitters, providing protection against medical expenses of their enrollees without the beneficiary's authorization, and having knowledge of the occurrence of any event affecting (a) an individual's right to any such benefit or payment, or (b) the initial right to any such benefit or payment, for the purpose of coordination of benefits with the Medicare program and implementation of the Medicare Secondary Payer provision at 42 U.S.C. 1395y (b).

Information to be disclosed shall be limited to Medicare entitlement, enrollment and utilization data necessary to perform that specific function. In order to receive the information, they must agree to:

a. Certify that the individual about whom the information is being provided is one of its insured or employees, or is insured and/or employed by another entity for whom they serve as a Third Party Administrator;

b. Utilize the information solely for the purpose of processing the individual's enrollment or insurance claim; and

c. Safeguard the confidentiality of the data and prevent unauthorized access.

Other insurers may require IDR information in order to support evaluations and monitoring of Medicare claims information of beneficiaries, including proper reimbursement for services provided.

6. To support Quality Improvement Organizations (QIO) in connection with review of claims, or in connection with studies or other review activities conducted pursuant to Part B of Title XI of the Act, and in performing affirmative outreach activities to individuals for the purpose of establishing and maintaining their entitlement to Medicare benefits or health insurance plans. As established by the Part D Program, QIOs will conduct reviews of prescription drug events data, or in connection with studies or other review activities conducted pursuant to Part D of Title XVIII of the Act.

QIOs will work to implement quality improvement programs, provide consultation to CMS, MA–PD, PDPs, and state agencies, to assist CMS in prescription drug event assessments, and prepare summary information for release to CMS.

QIOs will work to implement quality improvement programs, provide consultation to CMS, its contractors, and to state agencies. QIOs will assist state agencies in related monitoring and enforcement efforts, assist CMS and intermediaries in program integrity assessment, and prepare summary information for release to CMS.

7. To assist other insurers, underwriters, third party administrators (TPAs), self-insurers, group health plans, employers, health maintenance organizations, health and welfare benefit funds, Federal agencies, a state or local government or political subdivision of either (when the organization has assumed the role of an insurer, underwriter, or third party administrator, or in the case of a state that assumes the liabilities of an insolvent insurers pool or fund), multiple-employers trusts, no-fault medical, automobile insurers, workers' compensation carriers plans, liability insurers, and other groups providing protection against medical expenses who are primary payers to Medicare in accordance with 42 U.S.C. 1395y(b), or any entity having knowledge of the occurrence of any event affecting;

a. An individual's right to any such benefit or payment, or

b. The initial or continued right to any such benefit or payment (for example, a State Medicaid Agency, State Workers' Compensation Board, or Department of Motor Vehicles) for the purpose of coordination of benefits with the Medicare program and implementation of the MSP provisions at 42 U.S.C. 1395y(b). The information CMS may disclose will be:

- Beneficiary Name
- Beneficiary Address
- Beneficiary Health Insurance Claim Number
- Beneficiary Social Security Number
- Beneficiary Gender
- Beneficiary Date of Birth
- Amount of Medicare Conditional Payment
- Provider Name and Number
- Physician Name and Number
- Supplier Name and Number
- Dates of Service
- Nature of Service
- Diagnosis

To administer the MSP provision at 42 U.S.C. 1395y(b)(2), (3), and (4) more effectively, CMS would receive (to the extent that it is available) and may disclose the following types of information from insurers, underwriters, third party administrator, self-insurers, etc.:

- Subscriber Name and Address
- Subscriber Date of Birth
- Subscriber Social Security number
- Dependent Name
- Dependent Date of Birth
- Dependent Social Security Number
- Dependent Relationship to Subscriber
- Insurer/Underwriter/TPA Name and Address
- Insurer/Underwriter/TPA Group Number
- Insurer/Underwriter/Group Name
- Prescription Drug Coverage
- Policy Number
- Effective Date of Coverage
- Employer Name, Employer Identification Number (EIN) and Address
- Employment Status
- Amounts of Payment

To administer the MSP provision at 42 U.S.C. 1395y(b)(1) more effectively for entities such as Workers' Compensation carriers or boards, liability insurers, no-fault and automobile medical policies or plans, CMS would receive (to the extent that it is available) and may disclose the following information:

- Beneficiary's Name and Address
- Beneficiary's Date of Birth
- Beneficiary's Social Security number
- Name of Insured
- Insurer Name and Address

• Type of coverage; automobile medical, no-fault, liability payment, or workers' compensation settlement
• Insured's Policy Number
• Effective Date of Coverage
• Date of accident, injury or illness
• Amount of payment under liability, no-fault, or automobile medical policies, plans, and workers' compensation settlements
• Employer Name and Address (Workers' Compensation Only)
• Name of insured could be the driver of the car, a business, the beneficiary (i.e., the name of the individual or entity which carries the insurance policy or plan)

In order to receive this information the entity must agree to the following conditions;

a. To utilize the information solely for the purpose of coordination of benefits with the Medicare program and other third party payer in accordance with Title 42 U.S.C. 1395y(b);

b. To safeguard the confidentiality of the data and to prevent unauthorized access to it; and,

c. To prohibit the use of beneficiary-specific data for the purposes other than for the coordination of benefits among third party payers and the Medicare program. This agreement would allow the entities to use the information to determine cases where they or other third party payers have primary responsibility for payment. Examples of prohibited uses would include but are not limited to: Creation of a mailing list, sale or transfer of data.

To administer the MSP provisions more effectively, CMS may receive or disclose the following types of information from or to entities including insurers, underwriters, TPAs, and self-insured plans, concerning potentially affected individuals:
• Subscriber HICN
• Dependent Name
• Funding arrangements of employer group health plans, for example, contributory or non-contributory plan, self-insured, re-insured, HMO, TPA insurance
• Claims payment information, for example, the amount paid, the date of payment, the name of the insurers or payer
• Dates of employment including termination date, if appropriate
• Number of full and/or part-time employees in the current and preceding calendar years
• Employment status of subscriber, for example, full or part time or self-employed

Other insurers, HMO, and Health Care Prepayment Plans may require IDR information in order to support evaluations and monitoring of Medicare claims information of beneficiaries, including proper reimbursement for services provided.

1860D–23 and 1860D–24 of the Act require that the Secretary establish requirements for prescription drug plans (Part D plans) to ensure the effective coordination between a Part D plan and a State Pharmaceutical Assistance Program (SPAP), as well as other payers of prescription drug benefits, including enrollment file sharing. CMS, using its coordination of benefits contractor, allows this to happen by having payers that will be secondary to Part D submit their enrollment data in exchange for Part D enrollment data. The data shared is mainly enrollment information (date of enrollment into Part D, what Part D plan they are enrolled with). SPAPs, but not other payers, will also receive data indicating whether the beneficiary qualifies for a low-income subsidy to pay for drug costs.

8. To assist an individual or organization for a research project or in support of an evaluation project related to the prevention of disease or disability, the restoration or maintenance of health, or payment related projects.

The IDR data will provide for research or in support of evaluation projects, a broader, longitudinal, national perspective of the status of Medicare beneficiaries. CMS anticipates that many researchers will have legitimate requests to use this data in projects that could ultimately improve the care provided to Medicare beneficiaries and the policy that governs the care.

9. *To support the Department of Justice (DOJ), court or adjudicatory body when:*

a. The agency or any component thereof, or

b. Any employee of the agency in his or her official capacity, or

c. Any employee of the agency in his or her individual capacity where the DOJ has agreed to represent the employee, or

d. The United States Government, is a party to litigation or has an interest in such litigation, and by careful review, CMS determines that the records are both relevant and necessary to the litigation and that the use of such records by the DOJ, court or adjudicatory body is compatible with the purpose for which the agency collected the records.

Whenever CMS is involved in litigation, and occasionally when another party is involved in litigation and CMS' policies or operations could be affected by the outcome of the litigation, CMS would be able to disclose information to the DOJ, court or adjudicatory body involved.

10. To support a CMS contractor (including, but not necessarily limited to fiscal intermediaries and carriers) that assists in the administration of a CMS-administered health benefits program, or to a grantee of a CMS-administered grant program, when disclosure is deemed reasonably necessary by CMS to prevent, deter, discover, detect, investigate, examine, prosecute, sue with respect to, defend against, correct, remedy, or otherwise combat fraud, waste, or abuse in such program.

We contemplate disclosing information under this routine use only in situations in which CMS may enter into a contractual relationship or grant with a third party to assist in accomplishing CMS functions relating to the purpose of combating fraud, waste, and abuse.

CMS occasionally contracts out certain of its functions and makes grants when doing so would contribute to effective and efficient operations. CMS must be able to give a contractor or grantee whatever information is necessary for the contractor or grantee to fulfill its duties. In these situations, safeguards are provided in the contract prohibiting the contractor or grantee from using or disclosing the information for any purpose other than that described in the contract and requiring the contractor or grantee to return or destroy all information.

11. To support another Federal agency or to an instrumentality of any governmental jurisdiction within or under the control of the United States (including any State or local governmental agency), that administers, or that has the authority to investigate potential fraud, waste, or abuse in, a health benefits program funded in whole or in part by Federal funds, when disclosure is deemed reasonably necessary by CMS to prevent, deter, discover, detect, investigate, examine, prosecute, sue with respect to, defend against, correct, remedy, or otherwise combat fraud, waste, or abuse in such programs.

Other agencies may require IDR information for the purpose of combating fraud, waste, and abuse in such Federally-funded programs.

B. Additional Provisions Affecting Routine Use Disclosures

To the extent this system contains Protected Health Information (PHI) as defined by HHS regulation ''Standards for Privacy of Individually Identifiable Health Information'' (45 CFR Parts 160 and 164, Subparts A and E) 65 FR 82462

(12–28–00). Disclosures of such PHI that are otherwise authorized by these routine uses may only be made if, and as, permitted or required by the ''Standards for Privacy of Individually Identifiable Health Information.'' (See 45 CFR 164.512(a)(1)).

In addition, our policy will be to prohibit release even of data not directly identifiable, except pursuant to one of the routine uses or if required by law, if we determine there is a possibility that an individual can be identified through implicit deduction based on small cell sizes (instances where the patient population is so small that individuals could, because of the small size, use this information to deduce the identity of the beneficiary).

III. Safeguards

CMS has safeguards in place for authorized users and monitors such users to ensure against unauthorized use. Personnel having access to the system have been trained in the Privacy Act and information security requirements. Employees who maintain records in this system are instructed not to release data until the intended recipient agrees to implement appropriate management, operational and technical safeguards sufficient to protect the confidentiality, integrity and availability of the information and information systems and to prevent unauthorized access.

This system will conform to all applicable Federal laws and regulations and Federal, HHS, and CMS policies and standards as they relate to information security and data privacy. These laws and regulations may apply but are not limited to: The Privacy Act of 1974; the Federal Information Security Management Act of 2002; the Computer Fraud and Abuse Act of 1986; the Health Insurance Portability and Accountability Act of 1996; the E-Government Act of 2002, the Clinger-Cohen Act of 1996; the Medicare Modernization Act of 2003, and the corresponding implementing regulations. OMB Circular A–130, Management of Federal Resources, Appendix III, Security of Federal Automated Information Resources also applies. Federal, HHS, and CMS policies and standards include but are not limited to: All pertinent National Institute of Standards and Technology publications; the HHS Information Systems Program Handbook and the CMS Information Security Handbook.

IV. Effects of the System of Records on Individual Rights

CMS proposes to establish this system in accordance with the principles and requirements of the Privacy Act and will collect, use, and disseminate information only as prescribed therein. Data in this system will be subject to the authorized releases in accordance with the routine uses identified in this system of records.

CMS will take precautionary measures to minimize the risks of unauthorized access to the records and the potential harm to individual privacy or other personal or property rights of patients whose data are maintained in the system. CMS will collect only that information necessary to perform the system's functions. In addition, CMS will make disclosure from the proposed system only with consent of the subject individual, or his/her legal representative, or in accordance with an applicable exception provision of the Privacy Act. CMS, therefore, does not anticipate an unfavorable effect on individual privacy as a result of information relating to individuals.

Dated: November 24, 2006.

John R. Dyer,

Chief Operating Officer, Centers for Medicare & Medicaid Services.

SYSTEM NO. 09–70–0571

SYSTEM NAME:

''Medicare Integrated Data Repository (IDR), HHS/CMS/OIS''

SECURITY CLASSIFICATION:

Level Three Privacy Act Sensitive Data

SYSTEM LOCATION:

The Centers for Medicare & Medicaid Services (CMS) Data Center, 7500 Security Boulevard, North Building, First Floor, Baltimore, Maryland 21244–1850.

CATEGORIES OF INDIVIDUALS COVERED BY THE SYSTEM:

This system maintains information on individuals age 65 or over who have been, or currently are, entitled to health insurance (Medicare) benefits under Title XVIII of the Social Security Act (the Act) or under provisions of the Railroad Retirement Act; individuals under age 65 who have been, or currently are, entitled to such benefits on the basis of having been entitled for not less than 24 months to disability benefits under Title II of the Act or under the Railroad Retirement Act; individuals who have been, or currently are, entitled to such benefits because they have End-Stage Renal Disease (ESRD); individuals age 64 and 8 months or over who are likely to become entitled to health insurance (Medicare) benefits upon attaining age 65, and individuals under age 65 who have at least 21 months of disability benefits who are likely to become entitled to Medicare upon the 25th month or entitlement to such benefits and those populations that are dually eligible for both Medicare and Medicaid (Title XIX of the Act). Additionally, this system will maintain information on Medicare beneficiaries Parts A, B, C, and D and physicians, providers, employer plans, Medicaid recipients and Medicare secondary payers.

CATEGORIES OF RECORDS IN THE SYSTEM:

Information maintained in the system include, but are not limited to: standard data for identification such as health insurance claim number, social security number, gender, race/ethnicity, date of birth, geographic location, Medicare enrollment and entitlement information, MSP data necessary for appropriate Medicare claim payment, hospice election, MA plan elections and enrollment, End Stage Renal Disease (ESRD) entitlement, historic and current listing of residences, and Medicare eligibility and Managed Care institutional status. Additionally, this system will maintain identifying information on physicians, providers, employer plans, Medicaid recipients and Medicare secondary payers.

AUTHORITY FOR MAINTENANCE OF THE SYSTEM:

Authority for the collection of data maintained in this system is given under §§ 226, 226A, 1811, 1818, 1818A, 1831, 1833(a)(1)(A), 1836, 1837, 1838, 1843, 1866, 1874a, 1875, 1876, 1881, and 1902(a)(6) of the Social Security Act (the Act). The following are the corresponding sections from Title 42 of the United States Code (U.S.C.): 426, 426–1, 1395c, 1395i–2, 1395i–2a, 1395j, 1395l(a)(1)(A), 1395o, 1395p, 1395q, 1395v, 1395cc, 1395kk–l, 1395ll, 1395mm, 1395rr, 1396a(a)(6), and § 101 of the Medicare Prescription Drug, Improvement, and Modernization Act of 2003 (MMA) (Pub. L. 108–173), which established the Medicare Part D program.

PURPOSE(S) OF THE SYSTEM:

The primary purpose of this system is to establish an enterprise resource that will provide one integrated view of all CMS data to administer the Medicare and Medicaid programs. Information retrieved from this system of records will also be disclosed to: (1) Support regulatory, reimbursement, and policy functions performed within the agency or by a contractor, consultant or CMS grantee; (2) assist another Federal or state agency, agency of a state government, an agency established by state law, or its fiscal agent; (3) support

providers and suppliers of services for administration of Title XVIII; (4) assist third parties where the contact is expected to have information relating to the individual's capacity to manage his or her own affairs; (5) assist Medicare Advantage Plans and Part D Prescription Drug Plans; (6) support Quality Improvement Organizations (QIO); (7) assist other insurers for processing individual insurance claims; (8) facilitate research on the quality and effectiveness of care provided, as well as payment related projects; (9) support litigation involving the agency; and (10) combat fraud, waste, and abuse in certain health benefits programs.

ROUTINE USES OF RECORDS MAINTAINED IN THE SYSTEM, INCLUDING CATEGORIES OR USERS AND THE PURPOSES OF SUCH USES:

A. The Privacy Act allows us to disclose information without an individual's consent if the information is to be used for a purpose that is compatible with the purpose(s) for which the information was collected. Any such compatible use of data is known as a ''routine use.'' The proposed routine uses in this system meet the compatibility requirement of the Privacy Act. We are proposing to establish the following routine use disclosures of information maintained in the system:

1. To support agency contractors, consultants or grantees who have been engaged by the agency to assist in the performance of a service related to this system and who need to have access to the records in order to perform the activity.

2. To assist another Federal or state agency, agency of a state government, an agency established by state law, or its fiscal agent to:

a. Contribute to the accuracy of CMS' proper payment of Medicare benefits,

b. Enable such agency to administer a Federal health benefits program, or as necessary to enable such agency to fulfill a requirement of a Federal statute or regulation that implements a health benefits program funded in whole or in part with Federal funds, and/or

c. Assist Federal/state Medicaid programs within the state.

3. To support providers and suppliers of services directly or through fiscal intermediaries or carriers for the administration of Title XVIII of the Act.

4. To assist third party contact in situations where the party to be contacted has, or is expected to have information relating to the individual's capacity to manage his or her affairs or to his or her eligibility for, or an entitlement to, benefits under the Medicare program; and

a. The individual is unable to provide the information being sought (an individual is considered to be unable to provide certain types of information when any of the following conditions exists: The individual is confined to a mental institution, a court of competent jurisdiction has appointed a guardian to manage the affairs of that individual, a court of competent jurisdiction has declared the individual to be mentally incompetent, or the individual's attending physician has certified that the individual is not sufficiently mentally competent to manage his or her own affairs or to provide the information being sought, the individual cannot read or write, cannot afford the cost of obtaining the information, a language barrier exists, or the custodian of the information will not, as a matter of policy, provide it to the individual), or

b. The data are needed to establish the validity of evidence or to verify the accuracy of information presented by the individual, and it concerns one or more of the following: the individual's entitlement to benefits under the Medicare program, the amount of reimbursement, and in cases in which the evidence is being reviewed as a result of suspected fraud, waste, and abuse, program integrity, quality appraisal, or evaluation and measurement of activities.

5. To assist Medicare Advantage Plans, Part D Prescription Drug Plans and their Prescription Drug Event submitters, providing protection against medical expenses of their enrollees without the beneficiary's authorization, and having knowledge of the occurrence of any event affecting (a) an individual's right to any such benefit or payment, or (b) the initial right to any such benefit or payment, for the purpose of coordination of benefits with the Medicare program and implementation of the Medicare Secondary Payer provision at 42 U.S.C. 1395y(b).

Information to be disclosed shall be limited to Medicare entitlement, enrollment and utilization data necessary to perform that specific function. In order to receive the information, they must agree to:

a. Certify that the individual about whom the information is being provided is one of its insured or employees, or is insured and/or employed by another entity for whom they serve as a Third Party Administrator;

b. Utilize the information solely for the purpose of processing the individual's enrollment or insurance claim; and

c. Safeguard the confidentiality of the data and prevent unauthorized access.

6. To support Quality Improvement Organizations (QIO) in connection with review of claims, or in connection with studies or other review activities conducted pursuant to Part B of Title XI of the Act, and in performing affirmative outreach activities to individuals for the purpose of establishing and maintaining their entitlement to Medicare benefits or health insurance plans. As established by the Part D Program, QIOs will conduct reviews of prescription drug events data, or in connection with studies or other review activities conducted pursuant to Part D of Title XVIII of the Act.

7. To assist other insurers, underwriters, third party administrators (TPAs), self-insurers, group health plans, employers, health maintenance organizations, health and welfare benefit funds, Federal agencies, a state or local government or political subdivision of either (when the organization has assumed the role of an insurer, underwriter, or third party administrator, or in the case of a state that assumes the liabilities of an insolvent insurers pool or fund), multiple-employers trusts, no-fault medical, automobile insurers, workers' compensation carriers plans, liability insurers, and other groups providing protection against medical expenses who are primary payers to Medicare in accordance with 42 U.S.C. 1395y(b), or any entity having knowledge of the occurrence of any event affecting;

a. An individual's right to any such benefit or payment, or

b. The initial or continued right to any such benefit or payment (for example, a State Medicaid Agency, State Workers' Compensation Board, or Department of Motor Vehicles) for the purpose of coordination of benefits with the Medicare program and implementation of the MSP provisions at 42 U.S.C. 1395y(b). The information CMS may disclose will be:

- Beneficiary Name
- Beneficiary Address
- Beneficiary Health Insurance Claim Number
- Beneficiary Social Security Number
- Beneficiary Gender
- Beneficiary Date of Birth
- Amount of Medicare Conditional Payment
- Provider Name and Number
- Physician Name and Number
- Supplier Name and Number
- Dates of Service
- Nature of Service
- Diagnosis

To administer the MSP provision at 42 U.S.C. 1395y(b)(2), (3), and (4) more effectively, CMS would receive (to the extent that it is available) and may disclose the following types of information from insurers, underwriters,

third party administrator, self-insurers, etc.:

- Subscriber Name and Address
- Subscriber Date of Birth
- Subscriber Social Security number
- Dependent Name
- Dependent Date of Birth
- Dependent Social Security Number
- Dependent Relationship to Subscriber
- Insurer/Underwriter/TPA Name and Address
- Insurer/Underwriter/TPA Group Number
- Insurer/Underwriter/Group Name
- Prescription Drug Coverage
- Policy Number
- Effective Date of Coverage
- Employer Name, Employer Identification Number (EIN) and Address
- Employment Status
- Amounts of Payment

To administer the MSP provision at 42 U.S.C. 1395y(b)(1) more effectively for entities such as Workers' Compensation carriers or boards, liability insurers, no-fault and automobile medical policies or plans, CMS would receive (to the extent that it is available) and may disclose the following information:

- Beneficiary's Name and Address
- Beneficiary's Date of Birth
- Beneficiary's Social Security number
- Name of Insured
- Insurer Name and Address
- Type of coverage; automobile medical, no-fault, liability payment, or workers' compensation settlement
- Insured's Policy Number
- Effective Date of Coverage
- Date of accident, injury or illness
- Amount of payment under liability, no-fault, or automobile medical policies, plans, and workers' compensation settlements
- Employer Name and Address (Workers' Compensation Only)
- Name of insured could be the driver of the car, a business, the beneficiary (i.e., the name of the individual or entity which carries the insurance policy or plan).

In order to receive this information the entity must agree to the following conditions;

a. To utilize the information solely for the purpose of coordination of benefits with the Medicare program and other third party payer in accordance with Title 42 U.S.C. 1395y(b);

b. To safeguard the confidentiality of the data and to prevent unauthorized access to it; and,

c. To prohibit the use of beneficiary-specific data for the purposes other than for the coordination of benefits among third party payers and the Medicare program. This agreement would allow the entities to use the information to determine cases where they or other third party payers have primary responsibility for payment. Examples of prohibited uses would include but are not limited to; creation of a mailing list, sale or transfer of data.

To administer the MSP provisions more effectively, CMS may receive or disclose the following types of information from or to entities including insurers, underwriters, TPAs, and self-insured plans, concerning potentially affected individuals:

- Subscriber HICN
- Dependent Name
- Funding arrangements of employer group health plans, for example, contributory or non-contributory plan, self-insured, re-insured, HMO, TPA insurance.
- Claims payment information, for example, the amount paid, the date of payment, the name of the insurers or payer
- Dates of employment including termination date, if appropriate
- Number of full and/or part-time employees in the current and preceding calendar years
- Employment status of subscriber, for example, full or part time or self-employed

8. To assist an individual or organization for a research project or in support of an evaluation project related to the prevention of disease or disability, the restoration or maintenance of health, or payment related projects.

9. To support the Department of Justice (DOJ), court or adjudicatory body when:

a. The agency or any component thereof, or

b. Any employee of the agency in his or her official capacity, or

c. Any employee of the agency in his or her individual capacity where the DOJ has agreed to represent the employee, or

d. The United States Government, is a party to litigation or has an interest in such litigation, and by careful review, CMS determines that the records are both relevant and necessary to the litigation and that the use of such records by the DOJ, court or adjudicatory body is compatible with the purpose for which the agency collected the records.

10. To support a CMS contractor (including, but not necessarily limited to fiscal intermediaries and carriers) that assists in the administration of a CMS-administered health benefits program, or to a grantee of a CMS-administered grant program, when disclosure is deemed reasonably necessary by CMS to prevent, deter, discover, detect, investigate, examine, prosecute, sue with respect to, defend against, correct, remedy, or otherwise combat fraud, waste, or abuse in such program.

11. To support another Federal agency or to an instrumentality of any governmental jurisdiction within or under the control of the United States (including any State or local governmental agency), that administers, or that has the authority to investigate potential fraud, waste, or abuse in, a health benefits program funded in whole or in part by Federal funds, when disclosure is deemed reasonably necessary by CMS to prevent, deter, discover, detect, investigate, examine, prosecute, sue with respect to, defend against, correct, remedy, or otherwise combat fraud, waste, or abuse in such programs.

B. Additional Provisions Affecting Routine Use Disclosures

To the extent this system contains Protected Health Information (PHI) as defined by HHS regulation ''Standards for Privacy of Individually Identifiable Health Information'' (45 CFR Parts 160 and 164, Subparts A and E) 65 FR 82462 (12–28–00). Disclosures of such PHI that are otherwise authorized by these routine uses may only be made if, and as, permitted or required by the ''Standards for Privacy of Individually Identifiable Health Information.'' (See 45 CFR 164.512(a)(1)).

In addition, our policy will be to prohibit release even of data not directly identifiable, except pursuant to one of the routine uses or if required by law, if we determine there is a possibility that an individual can be identified through implicit deduction based on small cell sizes (instances where the patient population is so small that, because of the small size, use this information to deduce the identity of the beneficiary).

POLICIES AND PRACTICES FOR STORING, RETRIEVING, ACCESSING, RETAINING, AND DISPOSING OF RECORDS IN THE SYSTEM:

STORAGE:

All records are stored electronically.

RETRIEVABILITY:

All Medicare records are accessible by HICN, SSN, and unique provider identification number.

SAFEGUARDS:

CMS has safeguards in place for authorized users and monitors such users to ensure against unauthorized use. Personnel having access to the system have been trained in the Privacy

Act and information security requirements. Employees who maintain records in this system are instructed not to release data until the intended recipient agrees to implement appropriate management, operational and technical safeguards sufficient to protect the confidentiality, integrity and availability of the information and information systems and to prevent unauthorized access.

This system will conform to all applicable Federal laws and regulations and Federal, HHS, and CMS policies and standards as they relate to information security and data privacy. These laws and regulations may apply but are not limited to: The Privacy Act of 1974; the Federal Information Security Management Act of 2002; the Computer Fraud and Abuse Act of 1986; the Health Insurance Portability and Accountability Act of 1996; the E-Government Act of 2002, the Clinger-Cohen Act of 1996; the Medicare Modernization Act of 2003, and the corresponding implementing regulations. OMB Circular A–130, Management of Federal Resources, Appendix III, Security of Federal Automated Information Resources also applies. Federal, HHS, and CMS policies and standards include but are not limited to: All pertinent National Institute of Standards and Technology publications; the HHS Information Systems Program Handbook and the CMS Information Security Handbook.

RETENTION AND DISPOSAL:

Records are maintained for a period of 6 years and 3 months. All claims-related records are encompassed by the document preservation order and will be retained until notification is received from DOJ.

SYSTEM MANAGER AND ADDRESSES:

Director, Division of Business Analysis & Analysis, Enterprise Databases Group, Office of Information Services, CMS, Room N1–14–08, 7500 Security Boulevard, Baltimore, Maryland 21244–1850.

NOTIFICATION PROCEDURE:

For purpose of access, the subject individual should write to the system manager who will require the system name, HICN, address, date of birth, and gender, and for verification purposes, the subject individual's name (woman's maiden name, if applicable), and SSN. Furnishing the SSN is voluntary, but it may make searching for a record easier and prevent delay.

RECORD ACCESS PROCEDURE:

For purpose of access, use the same procedures outlined in Notification Procedures above. Requestors should also specify the record contents being sought. (These procedures are in accordance with department regulation 45 CFR 5b.5(a)(2)).

CONTESTING RECORDS PROCEDURES:

The subject individual should contact the system manager named above, and reasonably identify the records and specify the information to be contested. State the corrective action sought and the reasons for the correction with supporting justification. (These Procedures are in accordance with Department regulation 45 CFR 5b.7).

RECORDS SOURCE CATEGORIES:

The data collected and maintained in this system are retrieved from the following databases: Medicare Drug Data Processing System, System No. 09–70–0553 (70 Federal Register (FR) 58436 (October 6, 2005)); Medicare Beneficiary Database, System No. 09–70–0536 (71 FR 11425 (March 7, 2006)); Medicare Advantage Prescription Drug System, System No. 09–70–4001 (70 FR 60530 (October 18, 2005)); Medicaid Statistical Information System, System No. 09–70–0541 (71 FR 65527 (November 8, 2006)); Retiree Drug Subsidy Program, System No. 09–70–0550 (70 FR 41035 (July 15, 2005)); Common Working File, System No. 09–70–0526 (71 FR 64955 (November 6, 2006)); National Claims History, System No. 09–70–0005 (67 FR 57015 (September 6, 2002)); Enrollment Database, System No. 09–70–0502 (67 FR 3203 (January 23, 2002)); Multi-Carrier Claims System (formerly known as the Carrier Medicare Claims Record), System No. 09–70–0501 (71 FR 64968 (November 6, 2006)); Fiscal Intermediary Shared System (formerly known as the Intermediary Medicare Claims Record), System No. 09–70–0503 (71 FR 64961 (November 6, 2006)); Unique Physician/Provider Identification Number, System No. 09–70–0525, (69 FR 75316 (December 16, 2004)); Medicare Supplier Identification File, System No. 09–70–0530 (71 FR 65527 (November 8, 2006). Information will also be provided from the application submitted by the individual through state Medicaid agencies, the Social Security Administration and through other entities assisting beneficiaries.

SYSTEMS EXEMPTED FROM CERTAIN PROVISIONS OF THE ACT:

None.

[FR Doc. E6–21123 Filed 12–12–06; 8:45 am]

BILLING CODE 4120–03–P

DEPARTMENT OF HEALTH AND HUMAN SERVICES

Administration for Children and Families

Proposed Information Collection Activity: Comment Request

Proposed Projects

Title: Evaluation of the Mentoring Children of Prisoners (MCP) Program.

OMB No. New Collection.

Description: The Promoting Safe and Stable Families Amendments, as reauthorized (2006), amended Title IV–B of the Social Security Act (42 U.S.C. 629–629e) providing funding for nonprofit agencies that recruit, screen, train, and support mentors for children with an incarcerated parent or parents. The Family and Youth Services Bureau (FYSB) of the Administration for Children and Families, United States Department of Health and Human Services, administers the Mentoring Children of Prisoners (MCP) program. The MCP program provides children of prisoners with caring adult mentors, supporting one-to-one mentoring relationships. Research in other populations has shown that such relationships can lead to reductions in risk behaviors and improvements in academic, behavioral and psychological outcomes in children and youth. Although the MCP program was developed based on research documenting the efficacy of mentoring as a general intervention strategy, it is not yet known whether or not this particular intervention yields positive outcomes for the children of prisoners population. Little is known about how mentoring relationships work for these youth, and how effective mentoring relationships for children of prisoners differ from effective mentoring relationships for other youth. In addition, little is known about children of prisoners in general and thus a survey of MCP program youth has the potential to provide important data about this relatively unstudied population.

The evaluation and data collection proposed in this notice are to fulfill the statutory requirement under Section 8, subsection h(1) of the Child and Family Services Improvement Act of 2006, as amended, that the Secretary of the Department of Health and Human Services evaluate outcomes of the MCP program and report to Congress on the findings. The proposed data collections will support a study of the MCP program that measures the program's child outcomes and compares these outcomes in similar programs. The data collection also will provide general

information about youth in the program. Finally, the study will include an administrative survey of grantees participating in the study. The proposed study will include baseline and follow-up surveys (to be administered approximately 12 months apart) of youth ages 9–16 in the MCP program and will compare changes in key behaviors for program youth against changes in behaviors of similar youth not enrolled in mentoring programs. By comparing changes for youth in the MCP program against changes for youth not in the program, we will be able to determine if MCP youths' behaviors are closer to the norm for their age group at follow-up than at program intake. If MCP youths' behaviors and outcomes are shown to improve relative to other groups, the MCP program has demonstrated the potential for positive impacts. The survey also will include some general informational questions about youth in the study so that HHS, policy makers, and practitioners can have a greater understanding of the life circumstances of these youth and of some of the challenges they may face.

The youth surveys will focus on measuring both attitudinal and behavioral changes in areas targeted by the MCP program including attitudes towards and performance in school; relationships with parents, peers and teachers; self-esteem; and engagement in a variety of risk behaviors, including alcohol and drug use and physical violence. They also will include questions about the living situations of youth in the study, their relationships with both incarcerated and non-incarcerated caregivers, and their relationships with other supportive adults in their communities.

The administrative survey of grantees will include questions about the programmatic structure of each grantee. It will provide information about variations in program administration, mentor activities, and youth served.

Respondents: The proposed study sample consists of a cohort of 625 youth ages 9–16 in MCP programs operated at 10 or more different program sites. Survey data will also be collected from approximately 72 grantees.

ANNUAL BURDEN ESTIMATES

Instrument	Number of respondents	Number of responses per respondent	Average burden hours per response	Total burden hours
Student Baseline Survey	625	1	.5	312.5
Student follow-up Survey	500	1	.5	250
Grantee Survey	72	1	1	72

Estimated Total Annual Burden Hours: 634.5

In compliance with the requirements of Section 3506(c)(2)(A) of the Paperwork Reduction Act of 1995, the Administration for Children and Families is soliciting public comment on the specific aspects of the information collection described above. Copies of the proposed collection of information can be obtained and comments may be forwarded by writing to the Administration for Children and Families, Office of Administration, Office of Information Services, 370 L'Enfant Promenade, SW., Washington, DC 20447, Attn: ACF Reports Clearance Officer. E-mail address: *infocollection@acf.hhs.gov.* All requests should be identified by the title of the information collection.

The Department specifically requests comments on: (a) Whether the proposed collection of information is necessary for the proper performance of the functions of the agency, including whether the information shall have practical utility; (b) the accuracy of the agency's estimate of the burden of the proposed collection of information; (c) the quality, utility, and clarity of the information to be collected; and (d) ways to minimize the burden of the collection of information on respondents, including through the use of automated collection techniques or other forms of information technology. Consideration will be given to comments and suggestions submitted within 60 days of this publication.

Dated: November 8, 2006.

Robert Sargis,

Reports Clearance Officer.

[FR Doc. 06–9666 Filed 12–12–06; 8:45 am]

BILLING CODE 4184–01–M

DEPARTMENT OF HEALTH AND HUMAN SERVICES

Food and Drug Administration

[Docket No. 2006N–0104]

Agency Information Collection Activities; Submission for Office of Management and Budget Review; Comment Request; Requirements for Submission of Labeling for Human Prescription Drugs and Biologics in Electronic Format

AGENCY: Food and Drug Administration, HHS.

ACTION: Notice.

SUMMARY: The Food and Drug Administration (FDA) is announcing that a proposed collection of information has been submitted to the Office of Management and Budget (OMB) for review and clearance under the Paperwork Reduction Act of 1995.

DATES: Fax written comments on the collection of information by January 12, 2007.

ADDRESSES: To ensure that comments on the information collection are received, OMB recommends that written comments be faxed to the Office of Information and Regulatory Affairs, OMB, Attn: FDA Desk Officer, FAX: 202–395–6974.

FOR FURTHER INFORMATION CONTACT: Elizabeth Berbakos, Office of the Chief Information Officer (HFA–250), Food and Drug Administration, 5600 Fishers Lane, Rockville, MD 20857, 301–827–1482.

SUPPLEMENTARY INFORMATION: In compliance with 44 U.S.C. 3507, FDA has submitted the following proposed collection of information to OMB for review and clearance.

Requirements for Submission of Labeling for Human Prescription Drugs and Biologics in Electronic Format—(OMB Control Number 0910–0530)—Extension

FDA is requesting that OMB extend approval under the PRA for the information collection contained in the final rule entitled ''Requirements for Submission of Labeling for Human Prescription Drugs and Biologics in Electronic Format'' (68 FR 69009, December 11, 2003) (the 2003 final rule). The 2003 final rule amended FDA regulations governing the format in which certain labeling is required to be submitted for FDA review with new drug applications (NDAs), certain biological license applications (BLAs),

abbreviated new drug applications (ANDAs), supplements, and annual reports. The 2003 final rule required that the content of labeling for prescription drug and biological products required under 21 CFR 201.100(d)(3) be submitted to FDA electronically in a form that FDA can process, review, and archive. Copies of product labeling have been required to be submitted to FDA for review in NDAs, certain BLAs, ANDAs, certain supplements, and annual reports under §§ 314.50, 314.70, 314.81, 314.94, 314.97, 314.98, 601.2, and 601.12 (21 CFR 314.50, 314.70, 314.81, 314.94, 314.97, 314.98, 601.2, and 601.12). Under these regulations, copies of labeling may be submitted electronically or on paper. The 2003 final rule added the requirement to submit the content of labeling in electronic format to simplify the drug labeling review process and speed up the approval of labeling changes. The reporting burden for submitting labeling under §§ 314.50, 314.70, 314.81, 314.94, 314.97, and 314.98 has been estimated by FDA and the collection of information has been approved by OMB under OMB control number 0910–0001, most recently until May 31, 2008. The reporting burden associated with current §§ 601.2 and 601.12 has also been estimated and that collection of information has been approved by OMB under OMB control number 0910–0338, most recently until September 30, 2008. We are not re-estimating these approved burdens in this action. Only the additional reoccurring reporting burdens associated with the electronic submission of the content of labeling in the 2003 final rule are estimated in this action.

New NDAs (§ 314.50), ANDAs (§ 314.94), and BLAs (§ 601.2): Based on the number of submissions during 2005 under the approved collections of information for §§ 314.50, 314.94, and 601.2, we estimate that approximately 75 NDA applicants, 160 ANDA applicants, and 6 BLA applicants (respondents) submit applications to us annually. We estimate that these applicants (respondents) submit approximately 111 NDAs, 766 ANDAs, and 21 BLAs each year that are subject to the requirements of the 2003 final rule. As explained in section V of the 2003 final rule, we estimate that the hours per response, i.e., the additional time necessary for submission of the content of labeling in electronic format for these applications, will be less than 15 minutes.

Supplements to NDAs (§ 314.70), ANDAs (§ 314.97), and BLAs (§ 601.12(f)(1) and (f)(2)): Based on the number of submissions during 2005 under the approved collections of information for § 314.70, § 314.97, and § 601.12(f)(1) and (f)(2), we estimate that approximately 272 NDA applicants, 189 ANDA applicants, and 35 BLA applicants (respondents) submit supplements to approved applications to us annually. We estimate that these applicants (respondents) submit approximately 1,839 NDA supplements, 3,208 ANDA supplements, and 82 BLA supplements each year that are subject to the requirements of the 2003 final rule. As explained in section V of the 2003 final rule, we estimate that the hours per response, i.e., the additional time necessary for submission of the content of labeling in electronic format for these applications, will be less than 15 minutes.

Annual Reports for NDAs (§ 314.81), ANDAs (§ 314.98), and BLAs (§ 601.12(f)(3)): Based on the number of submissions during 2005 under the approved collections of information for §§ 314.81, 314.98, and 601.12(f)(3), we estimate that approximately 306 NDA applicants, 333 ANDA applicants, and 4 BLA applicants (respondents) submit annual reports to us annually. We estimate that NDA applicants submit to us approximately 2,617 annual reports, ANDA applicants submit approximately 6,054 annual reports, and BLA applicants submit approximately 16 annual reports each year that are subject to the requirements of the final rule. As explained in section V of the 2003 final rule, we estimate that the hours per response, i.e., the additional time necessary for submission of the content of labeling in electronic format for these submissions, will be less than 15 minutes.

In the **Federal Register** of March 29, 2006 (71 FR 15752), FDA published a 60-day notice requesting comments on the information collection provisions. FDA gave interested parties an opportunity to comment on the information collection during the process requesting that OMB extend approval of the collection. We received several comments. Generally, the comments said that, unlike FDA's 2003 final rule, the agency has now identified Extensible Markup Language (XML) as the required file format for Structured Product Label documents (SPL). The comments said that the March 29, 2006, **Federal Register** notice does not take into account the amount of time required to obtain, install, and update the program required to create the electronic files in the new format, and that SPL is a relatively new format requiring an initial investment in software, training, and process change that cannot simply be converted from the Word or PDF version of labeling. The comments said that the process for creating the SPL labeling includes significant effort in mapping, coding, recreation of the file, and quality control.

We appreciate the comments and believe they raise important issues. We will respond to the comments and amend this collection as soon as we have gathered sufficient information to address the costs specified in the comments. The public will have an opportunity to comment on our response at that time.

FDA estimates the burden of this collection of information as follows:

TABLE 1.—ESTIMATED ANNUAL REPORTING BURDEN[1]

21 CFR Section	No. of Respondents	No. of Responses per Respondent	Total Annual Responses	Hours per Response	Total Hours
New Applications					
314.50	75	1.48	111	.25	27.75
314.94	160	4.79	766	.25	191.50
601.14[2]	6	3.50	21	.25	5.25
Supplements					
314.70	272	6.76	1,839	.25	459.75
314.97	189	16.98	3,208	.25	802
601.14[3]	35	2.34	82	.25	20.5
Annual Reports					
314.81	306	8.55	2,617	.25	654.25
314.98	333	18.18	6,054	.25	1,513.50
601.14[4]	4	4	16	.25	4

TABLE 1.—ESTIMATED ANNUAL REPORTING BURDEN[1]—Continued

21 CFR Section	No. of Respondents	No. of Responses per Respondent	Total Annual Responses	Hours per Response	Total Hours
Total Reporting Burden Hours					3,678.50

[1] There are no capital costs or operating and maintenance costs associated with this collection of information.
[2] Applications submitted under § 601.2.
[3] Supplements submitted under § 601.12(f)(1) and (f)(2).
[4] Annual reports submitted under § 601.12(f)(3).

Dated: December 6, 2006.

Jeffrey Shuren,

Assistant Commissioner for Policy.

[FR Doc. E6–21132 Filed 12–12–06; 8:45 am]

BILLING CODE 4160–01–S

DEPARTMENT OF HEALTH AND HUMAN SERVICES

Food and Drug Administration

[Docket No. 2006N–0382]

Agency Information Collection Activities; Submission for Office of Management and Budget Review; Comment Request; Postmarket Surveillance

AGENCY: Food and Drug Administration, HHS.

ACTION: Notice.

SUMMARY: The Food and Drug Administration (FDA) is announcing that a proposed collection of information has been submitted to the Office of Management and Budget (OMB) for review and clearance under the Paperwork Reduction Act of 1995.

DATES: Fax written comments on the collection of information by January 12, 2007.

ADDRESSES: To ensure that comments on the information collection are received, OMB recommends that written comments be faxed to the Office of Information and Regulatory Affairs, OMB, Attn: FDA Desk Officer, FAX: 202–395–6974.

FOR FURTHER INFORMATION CONTACT: Denver Presley, Jr., Office of the Chief Information Officer (HFA–250), Food and Drug Administration, 5600 Fishers Lane, Rockville, MD 20857, 301–827–1472.

SUPPLEMENTARY INFORMATION: In compliance with 44 U.S.C. 3507, FDA has submitted the following proposed collection of information to OMB for review and clearance.

Postmarket Surveillance—21 CFR Part 822 (OMB No. 0910–0449)—Extension

Section 522(a) of the Federal Food, Drug and Cosmetic Act (the act) (21 U.S.C. 360(l)) authorizes FDA to require manufacturers to conduct postmarket surveillance (PS) of any device that meets the criteria set forth in the statute.

The PS regulation establishes procedures that FDA uses to approve and disapprove PS plans. The regulation provides specific, clear, and flexible instructions to manufacturers so they know what information is required in a PS plan submission. FDA reviews submissions in accordance with part 822 (21 CFR part 822) in §§ 822.15 to 822.18 of the regulation, which describe the grounds for approving or disapproving a PS plan. If this information is not collected, FDA would not be able to ensure that the PS will result in the collection of useful data that could reveal unforeseen adverse events or other information necessary to protect the public health.

Respondents to this collection of information are those manufacturers who require PS of their products.

In the **Federal Register** of October 2, 2006 (71 FR 57973), FDA published a 60-day notice requesting public comment on the information collection provisions. No comments were received.

FDA estimates the burden of this collection of information as follows:

TABLE 1.—ESTIMATED ANNUAL REPORTING BURDEN[1]

21 CFR Section	No. of Respondents	Annual Frequency per Response	Total Annual Responses	Hours per Response	Total Hours
822.9, 822.10	5	1	5	120	600
822.21	3	1	3	40	120
822.26	1	1	1	8	8
822.27	1	1	1	40	40
822.28	1	1	1	40	40
822.29	1	1	1	120	120
822.30	1	1	1	40	40
822.34	1	1	1	20	20
822.38	10	2	20	120	2,400
Total					3,338

[1] There are no capital costs or operating and maintenance costs associated with this collection of information.

TABLE 2.—ESTIMATED ANNUAL RECORDKEEPING BURDEN[1]

21 CFR Section	No. of Recordkeepers	Annual Frequency per Recordkeeping	Total Annual Records	Hours per Record	Total Hours
822.31	10	1	10	20	200
822.32	30	1	30	10	300
Total					500

[1]There are no capital costs or operating and maintenance costs associated with this collection of information.

FDA estimates that, based on current staffing and resources and experience with five actual PS actions over the past 3 years, five PS actions will be issued for generic devices, comprised of approximately five manufacturers. Each manufacturer will be required to submit a PS plan (§§ 822.9 and 822.10) and interim and final reports on the progress of the PS (§ 822.38). FDA anticipates that, on a case-by-case basis, requests for additional information may be made from a manufacturer. FDA expects that a small number of respondents will propose changes to their PS plans (§ 822.21), request a waiver of a specific requirement of this regulation (§ 822.29), or request exemption from the requirement to conduct PS of their device (§ 822.30). FDA's experience has shown that a few respondents will go out of business (§ 822.26) or cease marketing the device subject to PS (§ 822.28) each year. In addition, manufacturers must certify transfer of records when ownership changes (§ 822.34).

FDA expects that at least some of the manufacturers will be able to satisfy the PS requirement using information or data they already have. For purposes of calculating burden, however, FDA has assumed that each PS order can only be satisfied by a 3-year clinically-based PS plan, using three investigators. These estimates are based on FDA's knowledge and experience with limited implementation of section 522 under the Safe Medical Device Act of 1990. Therefore, FDA would expect that the recordkeeping requirements would apply to a maximum of 10 manufacturers (3 to 4 added each year) and 30 investigators (3 per PS plan). After 3 years, FDA would expect these numbers to remain level as the PS plans conducted under the earliest orders reach completion and new orders are issued.

Dated: December 7, 2006.

Jeffrey Shuren,

Assistant Commissioner for Policy.

[FR Doc. E6–21167 Filed 12–12–06; 8:45 am]

BILLING CODE 4160–01–S

DEPARTMENT OF HEALTH AND HUMAN SERVICES

Food and Drug Administration

Industry Exchange Workshop on Food and Drug Administration Clinical Trial Requirements; Public Workshop

AGENCY: Food and Drug Administration, HHS.

ACTION: Notice of public workshop.

The Food and Drug Administration (FDA) Los Angeles District, in cooperation with the Society of Clinical Research Associates (SoCRA), is announcing a workshop on FDA clinical trial statutory and regulatory requirements. This 2-day workshop for the clinical research community targets sponsors, monitors, clinical investigators, institutional review boards, and those who interact with them for the purpose of conducting FDA-regulated clinical research. The workshop will include both industry and FDA perspectives on proper conduct of clinical trials regulated by FDA.

Date and Time: The public workshop is scheduled for Wednesday, February 7, 2007, from 8:30 a.m. to 5 p.m. and Thursday, February 8, 2007, from 8:30 a.m. to 4:30 p.m.

Location: The public workshop will be held at the Wyndham San Diego at Emerald Plaza, 400 West Broadway, San Diego, CA 92101, 619–239–4500, FAX: 619–239–3274.

Contact: Marshalette Edwards, Food and Drug Administration, 1431 Harbor Bay Parkwy., Alameda, CA 94502, 510–337–6794, FAX: 510–337–6703 e-mail: *MO.Edwards@fda.hhs.gov*.

Registration: Send registration information (including name, title, firm name, address, telephone, and fax number) and the registration fee of $575 (member), $650 (nonmember), $525 (Government employee nonmember) or $450 (Government employee member) to SoCRA , P.O. Box 101, Furlong, PA 18925. The registration fee for nonmembers includes a 1-year membership). The registration fee for FDA employees is waived. Make the registration fee payable to SoCRA.To register via the Internet go to *http://www.socra.org/html/FDA_Conference.htm* (FDA has verified the Web site address, but is not responsible for subsequent changes to the Web site after this document publishes in the **Federal Register**).

The registrar will also accept payment by major credit cards. For more information on the meeting, or for questions on registration, contact 800–SoCRA92 (800–762–7292), or 215–822–8644, or via e-mail: *socramail@aol.com*. Attendees are responsible for their own accommodations. To make reservations at the Wyndham San Diego at Emerald Plaza at the reduced conference rate, contact the hotel (see *Location*) before January 7, 2007. The registration fee will be used to offset the expenses of hosting the conference, including meals, refreshments, meeting rooms, and materials.

Space is limited, therefore interested parties are encouraged to register early. Limited onsite registration may be available. Please arrive early to ensure prompt registration. If you need special accommodations due to a disability, please contact Marshalette Edwards (see *Contact*) at least 7 days in advance of the workshop.

SUPPLEMENTARY INFORMATION: The workshop on FDA clinical trials statutory and regulatory requirements helps fulfill the Department of Health and Human Services' and FDA's important mission to protect the public health by educating researchers on proper conduct of clinical trials. Topics for discussion include the following: (1) FDA regulation of the conduct of clinical research; (2) medical device, drug, biological product and food aspects of clinical research; (3) investigator initiated research; (4) pre-investigational new drug application meetings and the FDA meeting process; (5) informed consent requirements; (6) ethics in subject enrollment; (7) FDA regulation of institutional review boards; (8) electronic records requirements; (9) adverse event reporting; (10) how FDA conducts

bioresearch inspections; and (11) what happens after the FDA inspection.

FDA has made the education of the research community a high priority to ensure the quality of clinical data and protect research subjects. The workshop helps to implement the objectives of section 406 of the FDA Modernization Act (21 U.S.C. 393) and the FDA Plan for Statutory Compliance, which includes working more closely with stakeholders and ensuring access to needed scientific and technical expertise. The workshop also furthers the goals of the Small Business Regulatory Enforcement Fairness Act (Public Law 104–121) by providing outreach activities by Government agencies directed to small businesses.

Dated: December 6, 2006.

Jeffrey Shuren,

Assistant Commissioner for Policy.

[FR Doc. E6–21138 Filed 12–12–06; 8:45 am]

BILLING CODE 4160–01–S

DEPARTMENT OF HOMELAND SECURITY

Coast Guard

[COTP Houston-Galveston 06–037]

Houston-Galveston Area Maritime Security Committee; Vacancies

AGENCY: Coast Guard, DHS.

ACTION: Solicitation for membership.

SUMMARY: Under the Maritime Transportation Security Act of 2002, the Secretary of Homeland Security has established an Area Maritime Security (AMS) Committee under the direction of the Houston-Galveston Captain of the Port (COTP)/Federal Maritime Security Coordinator (FMSC). The Houston-Galveston COTP/FMSC hereby requests qualified individuals interested in serving on this committee to apply for AMS Committee membership.

DATES: Requests for membership should reach the Captain of the Port on or before January 24, 2007.

ADDRESSES: Requests for membership should be submitted to Sector Houston-Galveston, AMSC Executive Administrator, 9640 Clinton Drive, Houston TX 77029.

FOR FURTHER INFORMATION CONTACT: For questions about the Houston-Galveston AMS Committee or its charter, contact Ms. Tobi Moore, AMSC Executive Administrator, at (713) 671–5118.

SUPPLEMENTARY INFORMATION:

Authority

Section 102 of the Maritime Transportation Security Act (MTSA) of 2002 (Pub. L. 107–295) added section 70112 to Title 46 of the U.S. Code, and authorizes the Secretary of the Department in which the Coast Guard is operating to establish an AMS Committee for any port area of the United States. The MTSA includes a provision exempting these AMS Committees from the Federal Advisory Committee Act (FACA), Public Law 92–436, 86 Stat. 470 (5 U.S.C. App.2).

The Houston-Galveston AMS Committee assists the COTP/FMSC in the review and update of the AMS Plan for the Houston, Galveston, Freeport, and Texas City area of responsibility. Such matters may include, but are not limited to:

(1) Identifying critical port infrastructure and operations;

(2) Identifying risks (threats, vulnerabilities, and consequences);

(3) Determining mitigation strategies and implementation methods;

(4) Developing and describing the process to continually evaluate overall port security by considering consequences and vulnerabilities, how they may change over time, and what additional mitigation strategies can be applied; and

(5) Providing advice to, and assisting the COTP/FMSC in, reviewing and updating the Houston-Galveston Area Maritime Security Plan.

The Houston-Committee AMS Committee meets the last Thursday of odd-numbered months. Subcommittees, work groups and task forces convene between meetings of the parent committee. The AMS Committee meeting location is currently at the Port of Houston Authority, 111 East Loop North, Houston, TX. Committee meetings start at 9 a.m.

AMS Committee Membership

Applicants for AMS Committee membership should possess at least 5 years of experience related to maritime or port security operations. The total number of members of the AMS Committee shall be determined by the COTP/FMSC. Applicants may be required to pass an appropriate security background check prior to appointment to the committee.

The following appointed membership vacancies currently exist:

(1) *Docks & Terminals*—Alternate;

(2) *City Police Departments*—Primary and Alternate;

(3) *County Sheriffs*—Primary and Alternate;

(4) *Fleets*—Alternate;

(5) *Labor*—Primary and Alternate;

(6) *Port Police Departments*—Primary and Alternate;

(7) *Port Rail*—Alternate;

(8) *Shipyards*—Primary and Alternate; and

(9) *Trucking Industry*—Alternate.

Members' term of office will be for 5 years. Members are eligible to serve an additional term of office. Members will not receive any salary or other compensation for their service on the AMS Committee.

In support of the policy of the USCG on gender and ethnic diversity, we encourage qualified women and members of minority groups to apply.

Request for Applications

Applicants seeking AMS Committee membership are not required to submit formal applications to the COTP/FMSC, however, because we do have an obligation to ensure that a specific number of members have the prerequisite maritime security experience, we encourage the submission of resumes highlighting experience in the maritime and security industries.

Dated: November 22, 2006.

William J. Diehl,

Captain, U.S. Coast Guard, Federal Maritime Security Coordinator/Captain of the Port, Houston-Galveston.

[FR Doc. E6–21134 Filed 12–12–06; 8:45 am]

BILLING CODE 4910–15–P

DEPARTMENT OF THE INTERIOR

Office of the Secretary

Notice of Proposed Information Collection

AGENCY: Office of the Secretary, Office of Acquisition and Property Management.

ACTION: Notice and request for comments.

SUMMARY: In compliance with section 3506(c)(2)(A) of the Paperwork Reduction Act of 1995, the Office of the Secretary of the Department of the Interior announces the proposed extension of an information collection required by Office of Management and Budget (OMB) Circular A–45 (Revised): ''Private Rental Survey,'' OMB Control No. 1084–0033, and that it is seeking comments on its provisions. After public review, the Office of the Secretary will submit the information collection to OMB for review and approval.

DATES: Consideration will be given to all comments received by February 12, 2007.

ADDRESSES: Written comments and recommendations on the proposed

information collection should be sent to the Office of the Secretary Information Collection Budget Officer, Sue Ellen Sloca, 1951 Constitution Avenue, NW., MS 120 SIB, Washington, DC 20240, or electronically, by e-mail, to *sue_ellen_sloca@nbc.gov.* Individuals providing comments should reference OMB control number 1084–0033, ''Private Rental Survey.''

FOR FURTHER INFORMATION CONTACT: To request more information on this proposed information collection or to obtain a copy of the proposal and associated collection instrument, please write to the above address, or call Linda Tribby, Mail Stop 2607, 1849 C Street, NW., Washington, DC 20240, or e-mail her on *linda_tribby@ios.doi.gov.*

SUPPLEMENTARY INFORMATION:

I. Abstract

Office of Management and Budget (OMB) regulations at 5 CFR 1320, which implement the Paperwork Reduction Act of 1995 (Pub. L. 104–13), require that interested members of the public and affected agencies have an opportunity to comment on information collection and recordkeeping activities (see 5 CFR 1320.8 (d)). This notice identifies an information collection activity that the Office of the Secretary will submit to OMB for extension or re-approval.

Public Law 88–459 authorizes Federal agencies to provide housing for Government employees under specified circumstances. In compliance with OMB Circular A–45 (Revised), Rental and Construction of Government Quarters, a review of private rental market housing rates is required at least once every 5 years to ensure that the rental, utility charges, and charges for related services to occupants of Government Furnished Quarters (GFQ) are comparable to corresponding charges in the private sector. To avoid unnecessary duplication and inconsistent rental rates, the Office of Acquisition and Property Management (PAM) conducts housing surveys in support of quarters management programs for the Departments of the Interior (DOI), Agriculture, Commerce, Defense, Homeland Security, Justice, Transportation, Treasury, Health and Human Services, and Veterans Affairs. In this survey, two collection forms are used: OS–2000, covering ''Houses—Apartments—Mobile Homes'' and OS–2001, covering ''Trailer Spaces.''

This collection of information provides data that helps DOI and the other Federal agencies to manage GFQ within the requirements of OMB Circular A–45 (Revised.) If this information were not collected from the public, DOI and the other Federal agencies required to provide GFQ would have no objective basis for determining open market rental costs for GFQ.

II. Data

(1) *Title:* Private Rental Survey.

OMB Control Number: 1084–0033.

Current Expiration Date: 04/30/2007.

Type of Review: Information Collection: Renewal.

Affected Entities: Individuals or households, Businesses and other for-profit institutions.

Estimated annual number of respondents: OS–2000: 3,672; OS–2001: 200; Total: 3,872.

Frequency of response: once per respondent per year,

Note: Each of 15 regions is surveyed every, 4th year, with 3–4 regions being surveyed, each year.

(2) Annual reporting and recordkeeping burden.

Estimated burden per response: OS–2000: 12 minutes; *OS–2001:* 10 minutes.

Total annual reporting: OS–2000: 734 hours; *OS–2001:* 33 hours, Total: 767 hours.

(3) Description of the need and use of the information: This information collection provides the data that enables DOI to determine open market rental costs for GFQ. These rates, in turn, enable DOI and other Federal agencies to manage GFQ within the requirements of OMB Circular A–45 (Revised).

III. Request for Comments

The Department of the Interior invites comments on:

(a) Whether the collection of information is necessary for the proper performance of the functions of the agency, including whether the information will have practical utility;

(b) The accuracy of the agency's estimate of the burden of the collection and the validity of the methodology and assumptions used;

(c) Ways to enhance the quality, utility, and clarity of the information to be collected; and

(d) Ways to minimize the burden of the collection of information on those who are to respond, including through the use of appropriate automated, electronic, mechanical, or other collection techniques or other forms of information technology.

Burden means the total time, effort, or financial resources expended by persons to generate, maintain, retain, disclose or provide information to or for a Federal agency. This includes the time needed to review instructions; to develop, acquire, install and utilize technology and systems for the purpose of collecting, validating and verifying information, processing and maintaining information, and disclosing and providing information; to train personnel and to be able to respond to a collection of information, to search data sources, to complete and review the collection of information; and to transmit or otherwise disclose the information.

An agency may not conduct or sponsor, and a person is not required to respond to, a collection of information unless it displays a currently valid Office of Management and Budget control number.

Dated: November 30, 2006.

Debra E. Sonderman,

Director Office of Acquisition and Property Management.

[FR Doc. E6–21142 Filed 12–12–06; 8:45 am]

BILLING CODE 4310–RK–P

DEPARTMENT OF THE INTERIOR

Fish and Wildlife Service

Notice of Availability of the Draft Comprehensive Conservation Plan and Environmental Impact Statement for the Hanford Reach National Monument and Notification of Public Meetings

AGENCY: Fish and Wildlife Service, Interior.

ACTION: Notice of availability and notification of public meetings.

SUMMARY: The Fish and Wildlife Service (Service) announces that the Draft Hanford Reach National Monument (Monument) Comprehensive Conservation Plan and Environmental Impact Statement (Draft CCP/EIS) is available for review and comment. The Draft CCP/EIS describes the Service's proposal for managing the Monument for the next 15 years. Proposed changes to Monument management include: Opening additional acres to public use; implementing an upland and riparian habitat management program; developing and implementing cultural resource monitoring and management plans; establishing partnerships and community outreach programs to refine management of natural, cultural and recreational resources; establishing an environmental education program; and expanding interpretive, wildlife viewing, and wildlife photography facilities and programs. Draft compatibility determinations for several different public uses are also available for review with the Draft CCP/EIS.

DATES: Written comments must be received at the address below by

February 23, 2007. Public meetings will be held in January and February of 2007, see **SUPPLEMENTARY INFORMATION** for more information.

ADDRESSES: Comments on the Draft CCP/EIS should be addressed to: Greg Hughes, Project Leader, Hanford Reach National Monument, 3250 Port of Benton Boulevard, Richland, Washington 99354. Comments may also be submitted: at the public meetings; via electronic mail to *hanfordreach@fws.gov*; or via the Internet at *http://www.fws.gov/hanfordreach/*. Please use ''Hanford Reach CCP'' in the subject line for all electronic correspondence. See **SUPPLEMENTARY INFORMATION** for information on how to view or obtain a copy of the Draft CCP/EIS and for the dates, times, and locations of the public meetings.

FOR MORE INFORMATION CONTACT: Greg Hughes, Project Leader, phone (509) 371–1801.

SUPPLEMENTARY INFORMATION: The Draft CCP/EIS was prepared pursuant to the National Wildlife Refuge System Administration Act, as amended, and the National Environmental Policy Act of 1969 (NEPA). Copies of the Draft CCP/EIS, on compact disk, may be obtained by contacting Greg Hughes, Hanford Reach National Monument, 3250 Port of Benton Boulevard, Richland, Washington 99354, telephone (509) 371–1801. The Draft CCP/EIS may be downloaded from *hanfordreach.fws.gov/planning.html*. Copies of the Draft CCP/EIS may be viewed at Hanford Reach National Monument (see **ADDRESSES**) and at the following libraries and reading rooms.

1. Department of Energy Reading Room, Washington State University Tri-Cites Campus Library and Hanford Technical Library, Consolidated Information Center, 2770 University Drive, Richland, WA.
2. Mid-Columbia Public Library, Benton City Branch, 708 9th Street, Benton City, WA.
3. Kennewick Public Library, 1620 South Union, Kennewick, WA.
4. Mattawa Community Library, 61 Government Way, Mattawa, WA.
5. Othello Public Library, 101 East Main Street, Othello, WA.
6. Pasco Public Library, 1320 West Hopkins Street, Pasco, WA.
7. Richland Public Library, 955 Northgate Drive, Richland, WA.

Public Meetings

Four public meetings will be held to obtain public comments on the Draft CCP/EIS. The dates, times, and locations of the public meetings follow.

1. January 30, 2007, 5 p.m. to 8 p.m., at Mattawa Elementary School Gym, 400 North Boundary Road, Mattawa, WA.
2. January 31, 2007, 5 p.m. to 8 p.m., at Sunnyside Community Center, 1521 South 1st Street, Sunnyside, WA.
3. February 5, 2007, 10 a.m. to 2 p.m., at the Hampton Inn, 486 Bradley Blvd., Richland, WA.
4. February 8, 2007, 5 p.m. to 8 p.m., at the Red Lion Hotel, 2525 North 20th Ave., Pasco, WA.

Background

The 195,777-acre Monument is located in south-central Washington near Kennewick, Pasco, and Richland (Tri-Cities), Washington. Monument lands lie on both sides of the Columbia River. The land comprising the Monument has an unusual and colorful provenance. The entry of the United States into World War II, and the race to develop an atomic bomb, led to the search for a suitable place to locate plutonium production and purification facilities. In 1943, the War Department went in search of a remote, easily defensible, and geologically stable site, with plenty of cool water, abundant energy (from hydropower dams on the Columbia River), and a moderate climate, on which to build plutonium production reactors. The area around the isolated desert towns of White Bluffs and Hanford was an ideal location.

For more than 40 years, the primary mission at the Hanford Site was the production of nuclear materials for national defense. However, only a relatively small central core of the entire Hanford Site was needed for plutonium production; large tracts of land around this core were used as protective buffer zones for safety and security purposes and remained undisturbed. These buffer zones preserved a nationally significant biological and cultural resource setting in the Columbia Basin region.

In the early 1970s, the need for large buffer zones around the Hanford central core declined, and the Department of Energy (DOE), now running the Hanford Site, began transferring the management of portions of the buffer zones to the Service and the Washington State Department of Fish and Wildlife, culminating with the 1997 transfer of the administration of the Fitzner-Eberhardt Arid Lands Ecology Reserve to the Service.

In the 1980s, concerns for protection of the Hanford Site's natural and cultural resource values grew, as did interest in consolidating management under one natural resource agency. In 1988, Congress directed the Department of the Interior (DOI) to conduct a study of excess lands within the Hanford Site, with the intent to provide recommendations to Congress on the manner to best protect natural and cultural resource values. The resulting report by the National Park Service—the Hanford Reach of the Columbia River Comprehensive River Conservation Study—and DOE's Comprehensive Land Use Plan, identified the Service as best suited to protect those values, and the lands necessary to support them. After years of discussion and controversy, the question of protection was settled when President Clinton created the Monument in June 2000 (Proclamation 7319) under the American Antiquities Act.

Within the Hanford Site, the Monument forms a large horseshoe-shaped area around what is generally known as Central Hanford. The Monument, and Central Hanford, have been protected since 1943, and together, provide a haven for native plants, animals, and biological communities that were once more common in the surrounding landscape. Equally important is the portion of the Columbia River within the Hanford Site. It is unique within the post-dam Columbia River system in the United States, because the river is essentially free flowing through a segment of approximately 51 miles (46.5 miles are within the Monument). This segment, called the Hanford Reach, contains riparian habitat that is otherwise rare within the Columbia River system. It is because of this juxtaposition of increasingly rare habitats—the only nontidal, free-flowing stretch of the Columbia River remaining in the United States, and the largest remnant of the shrub-steppe ecosystem that dominated the Columbia Basin prior to European settlement—that the Monument was established.

Purpose and Need for Action

The purpose of the CCP is to provide a coherent, integrated set of management actions to help attain the Monument's vision, goals, and objectives. The CCP identifies the role the Monument should play in support of the mission of the National Wildlife Refuge System (NWRS), explains the Service's management actions, and provides a basis for Monument funding requests.

Alternatives

The Draft CCP/EIS identifies and evaluates six alternatives for managing the Monument for the next 15 years. All alternatives, except the No Action Alternative, open more acres of the Monument to public access, with Alternative B opening the least amount

of acreage and Alternatives D and E opening the most. All alternatives meet the primary purposes of the Monument and the mission of the NWRS; therefore, each one has the potential to be selected for implementation. The draft Alternative E has been identified as the preferred alternative because it strikes a reasonable balance between resource protections and compatible, wildlife-dependent public use and access, while at the same time addressing relevant laws, policies, regulations, and other mandates, and locally identified significant issues.

Alternative A, the No Action Alternative, is required by NEPA. It provides a baseline from which to compare the other alternatives. Under Alternative A, management practices already underway or funded would continue. Management would focus on protecting and enhancing biological and cultural resources, fire protection, fire rehabilitation, and maintenance of existing facilities. Land use designations that were in place at the time of Monument establishment would be maintained. Access for recreational, interpretive, and educational purposes would continue year-round in designated areas. The current primitive recreation opportunities would continue to be provided. The small environmental education program would continue, but could fluctuate without a stable staff base.

Alternative B focuses on protecting, conserving, and restoring the resources described in the Monument Proclamation; thousands of acres of the Monument could see some level of restoration activity on an annual basis. Avoiding impacts to resources would be a priority. Access for recreational, interpretive, and educational purposes would be expanded over current levels and would continue year-round in designated areas. The current primitive recreation opportunities would continue, with some additional facilities provided. New facilities could include wildlife observation sites and the construction of new trails. The small environmental education program would be slightly expanded.

Alternative C focuses on protecting and conserving the natural resources of the Monument by concentrating public use away from the Monument's interior to create and maintain large areas that are free of development, both for conservation purposes and to maintain natural landscapes and solitude opportunities. Visitors would be allowed access to significant portions of the Monument, but access points would be limited and concentrated in specific areas. Both primitive and developed recreation opportunities would be provided, although ease of access would be constrained. New facilities could include camping sites for float boaters, improved boat launches, wildlife observation sites, and the construction of new trails in greater abundance than Alternative B. Educational and interpretive opportunities would be substantially enhanced over current levels. Through economies of scale, and limiting large-scale development, more resources would be available for habitat restoration activities than under any alternative except Alternative B.

Alternative D provides the highest level of public use and access, although protection of resources would still remain a priority. Alternative D would assume a greater acceptance of risk to natural and cultural resources through increased public use and access. Developed recreation opportunities and visitor facilities would be increased significantly from the current level, including the construction of campgrounds, boat launches, new access points, trails, and automobile tour routes. Educational and interpretive opportunities would be greatly expanded over current levels, and would be aimed at not just providing information about the Monument, but also protecting Monument resources. This increase in public amenities would likely mean a decrease in restoration activities, with a greater emphasis on protecting resources and habitats in their current conditions.

Alternative E, the Preferred Alternative, was developed by the Hanford Reach Federal Advisory Committee (FAC) based on the initial range of actions under Alternatives A, B, C, and D. The FAC selected elements from each of the other alternatives to develop this alternative. Access points would be concentrated, much the same as Alternative C, although development most closely matches that of Alternative D. Recreation opportunities and visitor facilities would be increased substantially from the current level, although not to the level of Alternative D. New amenities would include the construction of camp sites for float boaters, boat launches, trails, and new access points. Educational and interpretive opportunities would be greatly expanded over current levels, although not to the level of Alternative D. This increase in public amenities would also likely mean a decrease in restoration activities, with a greater emphasis on protecting resources and habitats in the condition they currently exist.

Alternative F was developed by the Confederated Tribes of the Umatilla Indian Reservation (CTUIR) by modifying Alternative B. Restoration, access, public use and other management actions closely resemble Alternative B. The primary difference between Alternatives B and F is that Alternative F controls and monitors all public use and access through a permit system for all open areas of the Monument. Some areas would also require user fees to help fund Monument programs.

Public Comments

Public comments are requested, considered, and incorporated throughout the planning process. After the review and comment period ends for this Draft CCP/EIS, comments will be analyzed by the Service and addressed in revised planning documents. All comments received from individuals, including names and addresses, become part of the official public record and may be released. Requests for release of comments received from the public will be handled in accordance with the Freedom of Information Act, NEPA, and Service and DOI policies and procedures.

Dated: December 7, 2006.

David J. Wesley,

Acting Regional Director, Region 1, Portland, Oregon.

[FR Doc. E6–21261 Filed 12–12–06; 8:45 am]

BILLING CODE 4310–55–P

DEPARTMENT OF THE INTERIOR

Fish and Wildlife Service

Lacreek National Wildlife Refuge and Wetland Management District

AGENCY: Fish and Wildlife Service, Interior.

ACTION: Notice of availability of final comprehensive conservation plan and environmental assessment; request for comments.

SUMMARY: The U.S. Fish and Wildlife Service (Service) announces that a Comprehensive Conservation Plan (CCP) for Lacreek National Wildlife Refuge (Refuge) and Wetland Management District (WMD) is available. This CCP describes how the Service intends to manage this Refuge and WMD for the next 15 years.

DATES: Written comments must be received at the postal or electronic address listed below on or before February 12, 2007.

ADDRESSES: A copy of the CCP or Summary may be obtained by writing to

U.S. Fish and Wildlife Service, Division of Refuge Planning, 134 Union Boulevard, Suite 300, Lakewood, CO 80228; or downloaded from *http://mountain-prairie.fws.gov/planning*.

FOR FURTHER INFORMATION CONTACT: Michael Spratt, Planning Team Leader, U.S. Fish and Wildlife Service, telephone 303–236–4366; fax 303–236–4792; or e-mail: *Michael_spratt@fws.gov*.

SUPPLEMENTARY INFORMATION: This Refuge was established in 1935 by President Franklin D. Roosevelt through Executive Order No. 7160 ''* * * as a refuge and breeding ground for migratory birds and other wildlife.'' The Refuge lies in the Lake Creek Valley on the northern edge of the Nebraska Sandhills and includes 16,410 acres of native sandhills, sub-irrigated meadows, impounded fresh water marshes, and tall and mixed-grass prairie uplands.

The WMD was started as part of the Small Wetlands Acquisition Program, in the 1950s, to save wetlands from various threats, particularly draining. The passage of Public Law 85–585, in August of 1958, amended the Migratory Bird Hunting and Conservation Stamp Act (Duck Stamp Act) of 1934, allowing for the acquisition of Waterfowl Production Areas and Easements for Waterfowl Management Rights (easements). The WMD is located in Stanley, Todd, Harding, Jackson, Jones, Lawrence, Lyman, Meade, Mellette, Fall River, Haakon, Custer, Pennington, Bennett, and Butte counties of South Dakota.

We announced the availability of the draft CCP and Environmental Assessment (EA) for a 30-day public review and comment period in the **Federal Register** on January 13, 2006 (71 FR 2264–2265). The Draft CCP was sent to more than 60 Tribal governments, State of Utah officials, state and federal congressional delegates, other federal agencies, city and county officials, public citizens, non-governmental organizations, private businesses and consulting companies, community colleges and universities, and public libraries. During the 30-day public review period, we received 18 written comments and held a public meeting in Martin, South Dakota. No substantive changes were made to the document based on public comments.

The Draft CCP/EA identified and evaluated three management alternatives for managing the Refuge and the WMD for the next 15 years. Alternative A, the No Action Alternative, would continue current management of the Refuge. Alternative B, Integrated Restoration, the Proposed Action, would strive to restore ecological processes and achieve habitat conditions that require reduced management over time, recognizing the place of the refuge in the overall landscape and community. Alternative C, Comprehensive Grassland Restoration, would focus management on restoration of grassland habitat and its associated species. Based on this assessment and comments received, Alternative B was selected for implementation. We selected the preferred alternative (Alternative B) because it best meets the purposes for which the Refuge and the WMD were established, and is preferable to the ''no action'' alternative and Alternative C in light of physical, biological, economic, and social factors. The preferred alternative will continue to provide public access for wildlife-dependent recreation, environmental education, and interpretation.

As part of this plan, we developed a black-tailed prairie dog management plan for the Refuge. Management will include any activity conducted to control the size of prairie dog towns, maintain habitat suitability for black-tailed prairie dogs, and/or ensure the long-term viability of black-tailed prairie dogs at the Refuge, within a biologically and socially compatible zone over the next 15 years.

The Service is furnishing this notice to advise other agencies and the public of the availability of the Final CCP, to provide information on the desired conditions for the Refuge and the WMD, and to detail how the Service will implement management strategies. Based on the review and evaluation of the information contained in the environmental assessment, the Regional Director has determined that implementation of the Final CCP does not constitute a major Federal action that would significantly affect the quality of the human environment within the meaning of Section 102(2)(C) of the National Environmental Policy Act. Therefore, we will not prepare an Environmental Impact Statement.

Dated: May 23, 2006.

James J. Slack,

Deputy Regional Director, Region 6, Denver, CO.

Editorial Note: This document was received by the Office of the Federal Register December 8, 2006.

[FR Doc. E6–21216 Filed 12–12–06; 8:45 am]

BILLING CODE 4310–55–P

DEPARTMENT OF THE INTERIOR

Bureau of Indian Affairs

Request for Comments on Land Acquisitions Information Collection

AGENCY: Bureau of Indian Affairs, Interior.

ACTION: Notice of proposed renewal of an information collection.

SUMMARY: In compliance with the Paperwork Reduction Act of 1995, the Bureau of Indian Affairs (BIA) is seeking comments on the proposed renewal of the information collection, 25 CFR part 151 Land Acquisitions, OMB Control Number 1076–0100.

DATES: Submit comments on or before February 12, 2007, to be assured of consideration.

ADDRESSES: Send comments to Ben Burshia, Bureau of Indian Affairs, Division of Real Estate Services, Office of the Deputy Bureau Director—Trust Services, Mail Stop 4639–MIB, 1849 C Street, NW., Washington, DC 20240–0001. Submission by facsimile should be sent to (202) 219–1065. Electronic submission of comments is not available at this time.

FOR FURTHER INFORMATION CONTACT: You may request further information or obtain copies of the proposed information collection request from Ben Burshia at (202) 219–1195.

SUPPLEMENTARY INFORMATION: The Paperwork Reduction Act of 1995 provides an opportunity for interested parties to comment on proposed information collection requests. This collection covers 25 CFR part 151 as presently approved. The Bureau of Indian Affairs, Division of Real Estate Services, is proceeding with this public comment period as the first step in obtaining a normal information collection clearance from OMB. The request contains (1) type of review, (2) title, (3) summary of the collection, (4) respondents, (5) frequency of collection, (6) reporting and recordkeeping requirements, and (7) reason for response.

25 CFR Part 151—Land Acquisitions

Type of Review: Extension of a currently approved collection.

Title: 25 CFR Part 151, Acquisition of Title to Land in Trust.

Summary: The Secretary of the Interior has statutory authority to acquire lands in trust status for individual Indians and federally recognized Indian tribes. The Secretary requests information in order to identify the party(ies) involved and a description of the land in question. Respondents are

Native American tribes or individuals who request acquisition of real property into trust status. The Secretary also requests additional information necessary to satisfy those pertinent factors listed in 25 CFR 151.10 or 151.11. The information is used to determine whether or not the Secretary will approve an applicant's request. No specific form is used, but respondents supply information and data, in accordance with 25 CFR 151, so that the Secretary may make an evaluation and determination in accordance with established Federal factors, rules and policies.

Frequency of Collection: One Time.

Description of Respondents: Native American tribes and individuals desiring acquisition of lands in trust status.

Total Respondents: 1,000.

Total Annual Responses: 1,000.

Total Annual Burden Hours: 59,300 hours.

Reason for Response: Required to obtain or retain benefits.

The Bureau of Indian Affairs solicits comments in order to:

(1) Evaluate whether the proposed collection of information is necessary for the proper performance of the functions of the bureau, including whether the information will have practical utility;

(2) Evaluate the bureau's estimate of the burden of the proposed collection of information, including the validity of the methodology and assumptions used;

(3) Enhance the quality, utility, and clarity of the information to be collected; and

(4) Minimize the burden of the collection of information on those who are to respond.

Any public comments will be addressed in the Bureau of Indian Affairs' submission of the information collection request to the Office of Management and Budget.

We will not sponsor nor conduct a request for information, and you need not respond to such a request unless there is a valid OMB Control Number.

Please note that comments are open to public review; if you wish to have your name and address withheld from the reviewing public, you must state so prominently at the beginning of your comments. We will honor your request to the limit of the appropriate laws. All comments from businesses or their representatives will be available for public review. We may decide to withhold information for other reasons.

Dated: December 8, 2006.

Michael D. Olsen,

Principal Deputy Assistant Secretary—Indian Affairs.

[FR Doc. E6–21183 Filed 12–12–06; 8:45 am]

BILLING CODE 4310–W7–P

DEPARTMENT OF THE INTERIOR

Bureau of Indian Affairs

Land Acquisitions; Jicarilla Apache Tribe of New Mexico

AGENCY: Bureau of Indian Affairs, Interior.

ACTION: Notice of final agency determination to take land into trust under 25 CFR part 151.

SUMMARY: The Associate Deputy Secretary made a final agency determination to acquire approximately 31,777.066 acres, more or less, of land into trust for the Jicarilla Apache Tribe of New Mexico on December 4, 2006. This notice is published in the exercise of authority delegated by the Secretary of the Interior to the Associate Deputy Secretary by 209 DM 8.

FOR FURTHER INFORMATION CONTACT: Ben Burshia, Bureau of Indian Affairs, Chief, Division of Real Estate Services, Mail Stop 4639–MIB, 1849 C Street, NW., Washington, DC 20240, Telephone No. (202) 208–7737.

SUPPLEMENTARY INFORMATION: This notice is published to comply with the requirement of 25 CFR 151.12(b) that notice be given to the public of the Associate Deputy Secretary's decision to acquire land in trust at least 30 days prior to signatory acceptance of the land into trust. The purpose of the 30 days waiting period in 25 CFR 12(b) is to afford interested parties the opportunity to seek judicial review of final administrative decisions to take land in trust for Indian tribes and individual Indians before transfer of title to the property occurs. On December 4, 2006, the Associate Deputy Secretary decided to accept approximately 31,777.066 acres, more or less, of land into trust for the Jicarilla Apache Tribe of New Mexico pursuant to the Act of June 18, 1934 (48 Stat., 986; 25 U.S.C. 467). The Associate Deputy Secretary shall acquire title in the name of the United States in trust for the Jicarilla Apache Tribe of New Mexico for the following parcel of land described below no sooner than 30 days after the date of this notice.

New Mexico Principal Meridian, Rio Arriba County, New Mexico.

All of the following described tracts, pieces, or parcels of land comprising a net area of 31,777.066 acres of land, more or less (including PARCEL ONE, minus its seven exceptions, plus PARCEL TWO), situated within the Tierra Amarilla Grant, Rio Arriba County, New Mexico, to wit:

Parcel One

The following described land in Rio Arriba County, New Mexico:

Beginning at the point of intersection of the North bank of Canones Creek and the (1913) East right of way line of the Chama-Tierra Amarilla Wagon road, a granite stone 12″ x 5″ x 15″ in a pile of stones marked ''S.W.C.J.T.'' on East side, whence a cottonwood 18 inches in diameter and marked ''B.T.'' bears South 3 feet distant and running along the East right of way line of the road aforesaid by courses and distances as follows: N. 10°31′ W., 504.7 feet to a stone marked ''V.J.1''; thence N. 24°02′ W., 1370 feet to a stone marked ''V.J.2''; thence N. 2°13′ W., 912.7 feet to a stone marked ''V.J.3''; thence N. 3°37′ W., 1800 feet to a stone marked ''V.J.4''; thence N. 0°15′ W., 1200 feet to a stone marked ''V.J.5''; thence N. 4°57′ E., 1050 feet to a stone marked ''V.J.6''; thence N. 11°29′ W., 730 feet to a stone marked ''V.J.7''; thence N. 15°35′ E., 540 feet to a stone marked ''V.J.8''; thence N. 14°23′ W., 1030 feet to a stone marked ''V.J.9''; thence N. 1°17′ E., 1032 feet to a stone marked ''V.J.10''; thence N. 20°20′ W., 430 feet to a stone marked ''V.J.11'', the point of intersection of the (1913) East right of way line of the said Chama-Tierra Amarilla wagon road and the East boundary line of the ''old'' Chama-Tierra Amarilla wagon road as used prior to the year 1912, whence a pine 30 inches in diameter and marked ''B.T.'' bears S. 76° W., 422.5 feet distant; thence Northerly along the East boundary line of the ''old'' Chama-Tierra Amarilla wagon road last above described by courses and distances as follows: N. 13°46′ E., 520 feet to a stone marked ''V.J.12''; thence N. 23°43′ W., 1150 feet to a stone marked ''V.J.13''; thence N. 1°06′ W., 1105 feet to a stone marked ''V.J.14''; thence N. 25°26′ W., 1020 feet to a stone marked ''V.J.15''; thence N. 23°29′ W., 1658 feet to a stone marked ''V.J.16''; thence N. 36°57′ W., 1330 feet to a stone marked ''V.J.17''; thence N. 29°08′ W., 940 feet to a stone marked ''V.J.18''; thence N. 15°49′ W., 630 feet to a stone marked ''V.J.19''; thence N. 29°53′ W., 1150 feet to a stone marked ''V.J.20''; thence N. 8°16′ W., 462 feet to a pine 8 inches in diameter marked ''V.J.21''; thence N. 6°07′ E., 2250 feet to a stone marked ''V.J.22''; thence N. 4°05′ W., 1400 feet to a stone marked ''V.J.23''; thence N. 14°46′ W., 410 feet to a stone marked ''V.J.24'';

thence N. 6°06′ W., 600 feet to a stone marked ''V.J.25''; thence N. 43°13′ W., 352 feet to the point of intersection of the Easterly line of the said Chama-Tierra Amarilla wagon road as used prior to 1912, and the Easterly bank of the Chama River, a sandstone 4″ x 12″ x 24″ in a mound of stone and marked ''V.J.26'', whence a cottonwood 20 inches in diameter bears N. 24°15′ E., 29 feet, and another cottonwood 20 inches in diameter bears S. 73°45′ E., 13.5 feet, each marked ''B.T.''; thence Northerly following meanders of the said Chama River as nearly as may be practicable, but crossing and recrossing the same, by courses and distances as follows: N. 7°22′ E., 1136 feet to a stone on the West bank of said river bed marked ''V.J.27''; thence N. 80°28′ E., 540.8 feet, intersecting the South boundary line of a tract of land deeded in the deed given by Charles C. Catron to The Chama Valley Land Company, dated June 12, 1909, and of record in Book 4, pages 119–150 in the office of the Recorder of Rio Arriba County, New Mexico, and designated as ''Lands in Chama Valley'', at a point whence the Southeast corner of said tract bears South 76°00′ E., 1423.1 feet distant, at which point of intersection is placed a sandstone on the East bank of said river 16″ x 12″ x 10″ and marked ''V.J.28'', whence a pine 12 inches in diameter bears S. 85° E., 89.5 feet and a cottonwood 12 inches in diameter bears S. 17°30′ E., 83 feet distant, each marked ''B.T.V.J.28''; thence following the boundary lines of the said ''Lands of Chama Valley'' by courses and distances as follows: S. 76° E., 1423.1 feet to the Southeast corner thereof, a stone marked ''S.E.C.F.B.'' on West side and ''V.J.'' on East side; thence, coincident which the East line of said ''Lands in Chama Valley'', N. 13°15′ E., 8279.9 feet to the Southwest corner of a tract of land excluded for the Chama Cemetery, a stone marked ''S.W.C. Cem.'' on East and ''F.B.'' on West side; thence following the boundary lines of said Cemetery S. 78°43′ E., 268.5 feet to the Southeast corner thereof, a stone marked ''S.E.C. Cem.''; thence N. 13°30′ E., 192.7 feet to the Northeast corner thereof, a stone marked ''N.E.C. Cem.''; thence N. 78°43′ W., 286.3 feet to the Northwest corner thereof, a stone marked ''N.W.C. Cem.'' on East and ''F.B.'' on West, which point also is on the East boundary line of the aforesaid tract ''Lands in Chama Valley'' and 748.8 feet, S. 13°15′ W., from the Northeast corner thereof; thence N. 13°15′ E., 748.8 feet along the East boundary line of said ''Lands in Chama Valley'' to the Northeast corner thereof, a stone marked ''N.E.C.F.W.B.'' on South side and ''V.J.'' on North side; thence following the North boundary line of said ''Lands in Chama Valley'' N. 71°03′ W., 1862 feet to the Northwest corner thereof, a stone marked ''N.W.C.B.'' on East and ''D.&R.R.G.'' on West side, whence a cottonwood 5 inches in diameter bears S. 39° W. 22.2 feet, marked ''B.T.N.W.C.B. 2 D.&R.G.'' which point also is the Northeast corner No. 2 of a tract of land excluded in the deed of Catron to The Chama Valley Land Company hereinbefore mentioned and designated as ''Depot Grounds of the Denver and Rio Grande Railroad at Chama''; thence following the North line of the said Depot grounds, N. 71°03′ W., 62 feet to an intersection with the East bank of the Chama River aforesaid, a sandstone 4″ x 8″ x 10″ marked ''D. & R. G.'' on South side and ''V. J.'' on North side; thence Northerly following the meanders of the said Chama River as nearly as practicable by courses and distances as follows: Thence N. 9°03′ W., 475 feet; thence N. 32°24′ E. 598 feet; thence N. 6°27′ W., 357 feet; thence N. 83°58′ W., 360 feet; thence N. 18°05′ E., 315 feet; thence N. 65°01′ E., 290 feet; thence N. 15°14′ E., 780 feet; thence N. 31°36′ E., 300.8 feet; thence N. 31°03′ W., 603.4 feet; thence N. 17°34′ W., 337.8 feet; thence N. 37°57′ E., 1511.8 feet to the Northwest corner of tract herein conveyed (the point of intersection of the West bank of the Chama River and the South line of a tract of land deeded to one T.D. Burns by the grantor herein mentioned), a conglomerate stone 8″ x 14″ x 20″ marked ''T.B.D.'' on North side and ''N.W.C.V.J.'' on South side, whence a cottonwood 6 inches in diameter marked ''B.T.N.W.C.V.J.'' bears N. 43°30′ W., 89 feet; thence Easterly, coincident with the South boundary line of the said T.D. Burns tract, by courses and distances as follows: S. 44°27′ E., 1453.4 feet; thence N. 74°17′ E., 150 feet; thence N. 62°25′ E., 9058 feet to a point on the summit of Baldy Mountain; thence N. 5°45′ E., 2946 feet to a point on a crest of divide between a tributary of the Chama River and South branch of Wolfe Creek; thence Easterly along the crest of said divide as nearly as may be practicable to a point on the summit of ''Slide Rock'' Mountain (the course and distances on a direct line, however, being S. 74°21′ E., 17135 feet), a stone marked ''T.D.B.'' on North side which point also is on the crest of the watershed between Brazos and Chama Rivers; thence Southerly following the crest of the divide between the watershed of the Brazos River and the Chama River and of the Brazos River and Canones Creek as nearly as practicable, by courses and distances as follows: S. 23° 23′ E., 2040.7 feet to a stone marked ''V.J.1E.''; thence S. 61°51′ E., 796 feet to a stone marked ''V.J.2E.''; thence S. 79°45′ E., 600 feet to a stone marked ''V.J.3E.''; thence S. 64°23′ E., 600 feet to a stone marked ''V.J.4E''; thence S. 20°23′ E., 820 feet to a stone marked ''V.J.B.5E.''; thence S. 27°12′ E., 1130 feet to a stone marked ''J.6''; whence a spruce 12 inches in diameter bears S. 60°15′ W., 69 feet, and a spruce 5 inches in diameter bears N. 10° W., 9 feet, each marked ''B.T.V.J.6E.''; thence S. 33°57′ E., 975 feet to a stone marked ''V.J.7E.''; thence S. 60°24′ E., 700 feet to a stone marked ''V.J.8E.''; thence S. 45°05′ E., 547 feet to a spruce stump 4 inches in diameter marked ''V.J.9E.''; thence S. 29°16′ E., 1861.4 feet to a stone marked ''V.J.10E.''; thence S. 50°20′ E., 200 feet to a stone marked ''V.J.11E.''; thence S. 28°41′ E., 270 feet to a stake marked ''V.J.12E''; thence S. 43°44′ E., 400 feet to a stake marked ''V.J.13E.''; thence S. 18°19′ E., 238 feet to a stake marked ''V.J.''; thence S. 28°17′ E., 445 feet to a stake marked ''V.J.''; thence S. 76°01′ E., 254 feet to a stake marked ''V.J.''; thence S. 56°39′ E., 250 feet to a stake marked ''V.J.''; thence S. 71°03′ E., 275 feet to a stake marked ''V.J.''; thence N. 59°13′ E., 668 feet to a stake marked ''V.J.'', whence a spruce 8 inches in diameter marked ''B.T.V.J.A.'' bears N. 28°30′ W., 12 feet; thence S. 70°32′ E., 668 feet to a stake marked ''V.J.''; thence N. 82°02′ E., 360 feet to a stake marked ''V.J.''; thence N. 80°21′ E., 203.5 feet to a stake marked ''V.J.''; thence S. 66°04′ E., 214 feet to a stake marked ''V.J.''; thence S. 80°55′ E., 220 feet to a stake marked ''V.J.''; thence N. 82°53′ E., 210 feet to a stake marked ''V.J.''; thence S. 81°37′ E., 265 feet to a stake marked ''V.J.''; thence N. 46°26′ E., 226 feet; thence N. 84°40′ E., 265.5 feet; thence S. 85°35′ E., 594.7 feet to a stone marked ''V.J.'', whence a spruce 18 inches in diameter bears N. 63° E., 12 feet and another spruce 18 inches in diameter bears S. 64°30′ W., 26 feet, each marked ''B.T.V.J.''; thence S. 49°21′ E., 412.6 feet; thence S. 55°48′ E., 258 feet; thence S. 42°33′ E., 252.2 feet; thence S. 63°55′ E., 254 feet; thence S. 25°45′ E., 274.3 feet; thence S. 14°13′ E., 225 feet to a stone 2″ x 10″ x 18″ marked ''V.J.3M'', whence a spruce 10 inches in diameter bears S. 78°30′ E., 19 feet and a spruce 18 inches in diameter bears N. 6°30′ W., 65 feet, each marked ''V.J.3M.B.T.''; thence S. 36°27′ E., 505 feet to an iron pipe, ¾ inch diameter, marked ''VJ 36'', as shown on the plat of the 1998 survey of the Mossman Tract, by William H. Albert, New Mexico Professional

Surveyor No. 7241, filed in the Office of the County Clerk, Rio Arriba County, New Mexico, on July 9, 1998, in Plat Book P–980, page 5719, as Document No. RA 98–256A, from which point New Mexico State Engineer's Office (N.M.S.E.O) brass cap control station ''CABLE'', bears S. 86°18′56″ W. (true mean geodetic bearing converted from state plane grid bearing), 43990.84 feet distant (at mean elevation of 7772 feet) (Note: Control station ''CABLE'' has New Mexico State Plane Coordinate System Central Zone (NAD27), U.S. survey feet coordinates of y = 2,142,009.14 and x = 400,496.13; and the combined grid to ground factor used in the above-described 1998 Albert survey is 1.0004620520 and was computed at N.M.S.E.O. ''CABLE'' using the mean elevation of 7772 feet.); thence following the meander line of the divide between the Brazos River and Canones Creek watersheds as shown on the above-described 1998 Albert plat, S. 27°31′04″ E. (true mean geodetic converted from state plane grid), 598.42 feet; thence continuing on the meander line of the divide as shown on the above-described 1998 Albert plat, S. 4°00′11″ E. (true mean geodetic converted from state plane grid), 2405.07 feet; thence continuing on the meander line of the divide as shown on the above-described 1998 Albert plat, S. 16°41′26″ E. (true mean geodetic converted from state plane grid), 757.48 feet to a rebar, ½ inch diameter, with cap marked ''PS 7241''; thence continuing on the meander line of the divide as shown on the above-described 1998 Albert plat, S. 47°32′26″ E. (true mean geodetic converted from state plane grid), 1043.01 feet to a rebar, ½ inch diameter, with cap marked ''PS 7241''; thence continuing on the meander line of the divide as shown on the above-described 1998 Albert plat, S. 13°58′23″ E. (true mean geodetic converted from state plane grid), 983.46 feet to a rebar, ½ inch diameter, with cap marked ''PS 7241''; thence continuing on the meander line of the divide as shown on the above-described 1998 Albert plat, S. 5°43′44″ E. (true mean geodetic converted from state plane grid), 1823.47 feet; thence continuing on the meander line of the divide as shown on the above-described 1998 Albert plat, S. 7°37′00″ W. (true mean geodetic converted from state plane grid), 1704.80 feet to a fence post, 2½ inches diameter; thence continuing on the meander line of the divide as shown on the above-described 1998 Albert plat, S. 65°11′27″ E. (true mean geodetic converted from state plane grid), 1195.81 feet to a rebar, ½ inch diameter, with cap marked ''PS 7241''; thence continuing on the meander line of the divide as shown on the above-described 1998 Albert plat, S. 87°12′14″ E. (true mean geodetic converted from state plane grid), 818.09 feet to a rebar, ½ inch diameter, with cap marked ''PS 7241''; thence continuing on the meander line of the divide as shown on the above-described 1998 Albert plat, S. 64°04′44″ E. (true mean geodetic converted from state plane grid), 369.69 feet to a rebar, ½ inch diameter, with cap marked ''PS 7241''; thence continuing on the meander line of the divide as shown on the above-described 1998 Albert plat, S. 41°35′26″ E. (true mean geodetic converted from state plane grid), 539.50 feet to a stone marked ''VJ''; thence continuing on the meander line of the divide as shown on the above-described 1998 Albert plat, S. 70°33′44″ E. (true mean geodetic converted from state plane grid), 239.47 feet to a rebar, ½ inch diameter, with cap marked ''PS 7241''; thence S. 31°21′ E., 1340 feet to a stone marked ''V. J.''; thence S. 47°12′ E., 370 feet to a stone marked ''V.J.''; thence S. 36°31′ E., 150 feet to a stone marked ''V.J.''; thence S. 63°19′ E., 710 feet to a stone marked ''V.J.''; thence S. 34°59′ E., 689 feet to a ledge rock marked ''V.J.'', whence a spruce 12 inches in diameter bears N. 49°15′ E., 18.7 feet and a spruce 10 inches in diameter bears N. 22°30′ E., 59.5 feet, both marked ''B.T.V.J.''; thence S. 8°10′ E., 7589 feet to a stone marked ''V.J.''; thence S. 15°36′ E., 2025.8 feet to the Southeast corner of tract herein conveyed, a sandstone 3″ x 8″ x 18″ marked ''S.E.V.J.'', whence a spruce 14 inches in diameter bears S. 3° E., 19 feet and a spruce 10 inches in diameter bears N. 72° W., 42 feet, each marked ''B.T.S.E.V.J.''; thence leaving the crest of the divide as aforesaid, following Westerly along the South boundary of what is known as ''El Poso Park'' by courses and distances as follows: N. 86°57′ W., 1200 feet to a stone marked ''V.J.1S.''; thence S. 73°33′ W., 168 feet to a stone marked ''V.J.2S.''; thence S. 25°45′ W., 4038 feet to a stone marked ''V.J.3S''; thence N. 39° 32′ W., 3847 feet to a stone marked ''V.J.4S.''; thence N. 65°48′ W., 6360 feet to a stone marked ''V.J.'' thence N. 77°12′ W., 3070 feet to the head of the Box Canyon of Canones Creek a point on a granite stone located on Northwesterly side of said creek 3 ft. x 3 ft. x 2 ft. and marked ''V.J.'' on top; thence Southwesterly following the meanders of the said Canones Creek, as nearly as practicable, but crossing and recrossing same, an approximate distance of 3.85 miles to the mouth of said box canyon, a point on the North bank of said creek, at which point is placed a sandstone 6″ x 9″ x 8″ marked ''N.E.A.B.B.T.'', whence a cottonwood 18 inches in diameter bears N. 58°30′ W., 35 feet, and a pine 30 inches in diameter bears S. 68°30′ E., 74 feet; thence Southwesterly, following the meanders of the Canones Creek as nearly as practicable, but crossing and recrossing same, by courses and distances as follows: S. 66°28′ W., 48.3 feet; thence S. 55°38′ W., 286 feet; thence S. 77°18′ W., 448.5 feet; thence S. 78°08′ W., 320 feet; thence S. 87°27′ W., 106.9 feet; thence N. 67°09′ W., 223.6 feet; thence S. 82°21′ W., 420.1 feet; thence S. 76°59′ W., 24.8 feet; to a 2½ inch iron pipe set in ground, the point of intersection with the East line of the tract of land deeded to Charles A. Daggett by the grantor herein mentioned and 1562.4 feet South from the Northeast corner thereof; thence coincident with the boundary lines of the said Daggett tract by courses and distances as follows: North, 1562.4 feet to the Northeast corner thereof, a stone 14″ x 10″ x 6″ marked ''N.E.C.D.T.''; thence West, 8220 to the Northwest corner, a granite stone 14″ x 12″ x 7″ marked ''N.W.C.D.T.''; thence South, 5280 feet to the Southwest corner thereof, a sandstone 12″ x 14″ x 16″ in mound of stone and marked ''S.W.C.D.T .'', whence corner No. 1 of a tract of reserved land designated in the deed of Catron to The Chama Valley Land Company, hereinbefore mentioned, as ''Tract No. 1 or Canones Tract'' bears S. 60°18′ W., 7014 feet; thence along said creek N. 87°32′ W., 1200 feet to a point on the North bank thereof; thence with meanders of said creek by crossing and recrossing same, S. 59°02′ W., 2247 feet to the point of beginning of PARCEL ONE, containing a gross area of 32,133.67 acres, more or less (32,075.8 acres + 57.87 acres additional as indicated on the above-described 1998 Albert survey plat)—before the exceptions listed below are subtracted out. All courses true, 1913 magnetic variation 14°30′ East, as obtained by solar observation. Subject however to all exceptions and reservations and also all warranties, defenses and recourses provided for by the Arlington Land Company in its Warranty Deed to Venceslao Jaramillo under date of May 1st, 1913, and recorded in the office of the County Clerk and ex-officio County Recorder of Rio Arriba County, State of New Mexico, under date of October 1st, 1913, in vol. No. 19–A, pages 331–344 inclusive.

Less and Excepting from the above-described *Parcel One,* the following seven tracts of land.

Less and Excepting Tract One

All that portion of the above-described *Parcel One* (formerly known as the Venceslao Jaramillo Tract) lying West of the centerline of the Santa Fe–Chama Highway as now constructed, which centerline is described as follows, but subject to the easement of way of varying width for said highway: Beginning at centerline Sta. 826+07 of FAP 34–B Reo., Rio Arriba County, New Mexico, a point on the right of way of the present road; thence N. 5° 34′ W., a distance of 3182.1 feet to Sta. 857+89.1, point of curve; thence Northerly on a 0° 30′ curve (radius = 11460 feet) through an arc of 4° 45′ to the right a distance of 950 feet to Sta. 867+39.1, point of tangent; thence N. 0° 49′ W., a distance of 5076.2 feet to Sta. 918+15.3, point of curve; thence Northwesterly on a 1° curve (radius = 5730 feet) thru an arc 20° 17′ to the left a distance of 2028.3 feet to Sta. 938+43.6, point of tangent; thence N. 21° 06′ W., a distance of 1794 feet to Sta. 956+37.6 Back = 955+53.5 ahead; thence continuing N. 21° 06′ W., a distance of 5986.7 feet to Sta. 1015+40.2, point of curve; thence Northerly on a 1° curve (radius = 5730 feet) thru an arc of 9° 47′ to the right a distance of 978.3 feet to Sta. 1025+18.5, point of tangent; thence N. 11° 19′ W., a distance of 1776.5 feet to Sta. 1042+95, a point on the line between the properties of the grantor and Mrs. John Reddington, containing 95.324 acres, more or less.

(Note: TRACT ONE, described above, is a parcel of land that was originally excepted in the Warranty Deed from Edward Sargent and Estelle B. Sargent to Chama Land and Cattle Company, recorded in the Office of the County Clerk, Rio Arriba County, New Mexico, on May 29, 1950, in Book 40, page 160.)

Less and Excepting Tract Two

All that certain parcel of land, known as the Sargent Canones Ranch, described as follows: Beginning at the southwest corner of the Charles A. Daggett tract as described in the deed from the Arlington Land Company to Vencesalo Jaramillo, dated May 1, 1913, as recorded in the records of the County Clerk of Rio Arriba County, New Mexico, in Book 19–A, at pages 331–344, inclusive; thence along Canones Creek, N. 87° 32′ W., a distance of 1200 feet to a point on the North bank thereof; thence with meanders of said creek by crossing and recrossing same, S. 59° 02′ W., a distance of 2247 feet to the point described as the beginning point of the survey description of the Jaramillo tract as contained in the deed from The Arlington Land Company to Jaramillo, as described above, which point is located at the intersection of the North bank of Canones Creek and the East right of way line of the Chama-Tierra Amarilla wagon road as the same existed May 1, 1913; thence running along the East right of way line of the road, as above, (the West boundary of the Jaramillo tract), by courses and distances as follows: N. 10° 31′ W., a distance of 504.7 feet; thence N. 24° 02′ W., a distance of 1370 feet; thence N. 2° 13′ W., a distance of 615 feet to the Northwest corner of the tract being described here, which point is on the West boundary of the Jaramillo tract and is located S. 89° 00′ W., (distance omitted) from the fence corner on the North side of the fenced private lane running Easterly from the present (1948) State Highway, and which corner is also on the East boundary of the said fenced Highway; thence N. 89° E., to, and following the fence line on the North side of the said private lane to a point which is 646 feet from the said fence corner; thence again following the said fence in the North side of the said lane, to a point which is N. 83° E., 2100 feet distant; thence again following the said fence line to a point which is N. 71° 30′ E., 821 feet distant and which point is also on the West boundary of the said Charles A. Daggett tract, and is also the Northeast corner of the tract being described here; thence 31 feet South to the fence corner on the South side of the said private lane; thence South, along the boundary between the Daggett tract and the Jaramillo tract, a distance of 1726 feet to the point of beginning of the survey of the tract being described here. The above described tract contains 125.4 acres, more or less.

(Note: TRACT TWO, described above, is a parcel of land that was originally excepted in the Warranty Deed from Edward Sargent and Estelle B. Sargent to Chama Land and Cattle Company, recorded in the Office of the County Clerk, Rio Arriba County, New Mexico, on May 29, 1950, in Book 40, page 160. The distance from the Northwest corner of this tract, on the West boundary of the Jaramillo tract, to the fence corner on the North side of the fenced private lane and on the East boundary of the fenced highway, was omitted from the above deed description.)

Less and Excepting Tract Three

All that certain parcel of land, containing 99.79 acres, more or less, as described in that certain Warranty Deed from Chama Land and Cattle Company, Inc. to D.I.C. Kelly, recorded in the Office of the County Clerk, Rio Arriba County, New Mexico, on February 28, 1955, in Book 51, page 51.

Less and Excepting Tract Four

All of that certain parcel of land, containing 2.59 acres, more or less, as described in that certain Quitclaim Deed from Chama Land and Cattle Company, Inc. to Raymond E. Reddington, recorded in the Office of the County Clerk, Rio Arriba County, New Mexico, on January 24, 1957, in Book 55, page 165.

Less and Excepting Tract Five

All of that certain parcel of land containing 4.83 acres, more or less, described in Exhibit ''B'' of that certain Warranty Deed from Chama Land and Cattle Company, Inc. to O. A. Washburn, recorded in the Office of the County Clerk, Rio Arriba County, New Mexico, on September 23, 1956, in Book 53, page 353.

Less and Excepting Tract Six

All of that certain parcel of land, containing 2.360 acres, more or less, as described in that certain Quitclaim Deed from Chama Land and Cattle Company, Inc. to the New Mexico State Highway Department, recorded in the Office of the County Clerk, Rio Arriba County, New Mexico, on March 17, 1969, in Book 101, page 271.

Less and Excepting Tract Seven

All of that certain parcel of land, containing 26.5 acres, more or less, as described in that certain Corrected Warranty Deed from Chama Land and Cattle Company, Inc. to Newt McCain and Mary Anne McCain, recorded in the Office of the County Clerk, Rio Arriba County, New Mexico, on February 1, 1971, in Book 107, page 453.

The above legal description of *Parcel One* and its seven exceptions (*Tracts One* through *Seven*), is intended to describe all the land, not previously excluded or sold, known as Chama Land and Cattle Company (now known as the Jicarilla Apache Nation's Lodge at Chama), being and intended to be all of the property described in that certain Trustee Deed to The Jicarilla Apache Tribe, recorded in the Office of the County Clerk, Rio Arriba County, New Mexico, on June 5, 1995, in Book 183, page 103. The net area of *Parcel One* after the seven exceptions are subtracted is 31,776.876 acres, more or less.

Parcel Two

Lot Fifty-Two (52), BUREC Subdivision, Unit A, containing 0.19 acres, more or less, as shown on the plat filed in the Office of the County Clerk, Rio Arriba County, New Mexico, on

June 11, 1971, in the Book of Plats, pages 460–461.

Dated: December 4, 2006.

James E. Cason,

Associate Deputy Secretary.

[FR Doc. E6–21202 Filed 12–12–06; 8:45 am]

BILLING CODE 4310–W7–P

DEPARTMENT OF THE INTERIOR

Bureau of Land Management

[AK–964–1410–KC–P; F–14990–A, F–14990–A2]

Alaska Native Claims Selection

AGENCY: Bureau of Land Management, Interior.

ACTION: Notice of decision approving lands for conveyance.

SUMMARY: As required by 43 CFR 2650.7(d), notice is hereby given that an appealable decision approving lands for conveyance pursuant to the Alaska Native Claims Settlement Act will be issued to The Kuskokwim Corporation, Successor in Interest to Kipchaughpuk Limited. The lands are in the vicinity of the Native village of Crooked Creek, Alaska, and are located in:

Lot 4, U.S. Survey No. 4125, Alaska.

Containing 1.04 acres.

Seward Meridian, Alaska

T. 21 N., R. 47 W.,
Sec. 33.

Containing approximately 302 acres.

T. 23 N., R. 48 W.,
Secs. 5 to 8, inclusive.

Containing 2,498.51 acres.

T. 22 N., R. 49 W.,
Secs. 4 to 9, inclusive;
Secs. 17 to 21, inclusive.

Containing 6,967.68 acres.

T. 23 N., R. 49 W.,
Secs. 1, 11, and 12.

Containing 1,920 acres.

T. 21 N., R. 50 W.,
Secs. 2 to 11, inclusive.

Containing 6,381.87 acres.

T. 22 N., R. 50 W.,
Secs. 1, 12, and 13;
Secs. 34 and 35.

Containing 3,200 acres.

Aggregating approximately 21,271 acres.

The subsurface estate in these lands will be conveyed to Calista Corporation when the surface estate is conveyed to The Kuskokwim Corporation. Notice of the decision will also be published four times in the Tundra Drums.

DATES: The time limits for filing an appeal are:

1. Any party claiming a property interest which is adversely affected by the decision shall have until January 12, 2007 to file an appeal.

2. Parties receiving service of the decision by certified mail shall have 30 days from the date of receipt to file an appeal.

Parties who do not file an appeal in accordance with the requirements of 43 CFR part 4, Subpart E, shall be deemed to have waived their rights.

ADDRESSES: A copy of the decision may be obtained from: Bureau of Land Management, Alaska State Office, 222 West Seventh Avenue, #13, Anchorage, Alaska 99513–7599.

FOR FURTHER INFORMATION CONTACT: The Bureau of Land Management by phone at 907–271–5960, or by e-mail at *ak.blm.conveyance@ak.blm.gov.* Persons who use a telecommunication device (TTD) may call the Federal Information Relay Service (FIRS) at 1–800–877–8330, 24 hours a day, seven days a week, to contact the Bureau of Land Management.

Kara Marciniec,

Land Law Examiner, Branch of Adjudication II.

[FR Doc. E6–21217 Filed 12–12–06; 8:45 am]

BILLING CODE 4310–$$–P

DEPARTMENT OF THE INTERIOR

Minerals Management Service

Agency Information Collection Activities: Proposed Collection; Comment Request

AGENCY: Minerals Management Service (MMS), Interior.

ACTION: Notice of extension of an information collection (1010–0114).

SUMMARY: To comply with the Paperwork Reduction Act of 1995 (PRA), MMS is inviting comments on a collection of information that we will submit to the Office of Management and Budget (OMB) for review and approval. The information collection request (ICR) concerns the paperwork requirements in the regulations under 30 CFR Part 250, Subpart A, ''General.''

DATES: Submit written comments by February 12, 2007.

ADDRESSES: You may submit comments by any of the following methods listed below. Please use the Information Collection Number 1010–0114 as an identifier in your message.

- E-mail MMS at *rules.comments@mms.gov.* Identify with Information Collection Number 1010–0114 in the subject line.
- Fax: 703–787–1093. Identify with Information Collection Number 1010–0114.
- Mail or hand-carry comments to the Department of the Interior; Minerals Management Service; Attention: Cheryl Blundon; 381 Elden Street, MS–4024; Herndon, Virginia 20170–4817. Please reference ''Information Collection 1010–0114'' in your comments.

FOR FURTHER INFORMATION CONTACT: Cheryl Blundon, Regulations and Standards Branch at (703) 787–1607. You may also contact Cheryl Blundon to obtain a copy, at no cost, of the regulations and the forms that require the subject collection of information.

SUPPLEMENTARY INFORMATION:

Title: 30 CFR Part 250, Subpart A, ''General''.

Form(s): MMS–132, MMS–1123, and MMS–1832.

OMB Control Number: 1010–0114.

Abstract: The Outer Continental Shelf (OCS) Lands Act, as amended (43 U.S.C. 1331 *et seq.* and 43 U.S.C. 1801 *et seq.*), authorizes the Secretary of the Interior to prescribe rules and regulations to administer leasing of the OCS. Such rules and regulations will apply to all operations conducted under a lease. Operations on the OCS must preserve, protect, and develop oil and natural gas resources in a manner that is consistent with the need to make such resources available to meet the Nation's energy needs as rapidly as possible; to balance orderly energy resource development with protection of human, marine, and coastal environments; to ensure the public a fair and equitable return on the resources of the OCS; and to preserve and maintain free enterprise competition. Section 1332(6) states that ''operations in the [O]uter Continental Shelf should be conducted in a safe manner by well trained personnel using technology, precautions, and other techniques sufficient to prevent or minimize the likelihood of blowouts, loss of well control, fires, spillages, physical obstructions to other users of the waters or subsoil and seabed, or other occurrences which may cause damage to the environment or to property or endanger life or health.''

The Independent Offices Appropriations Act (31 U.S.C. 9701), the Omnibus Appropriations Bill (Pub. L. 104–133, 110 Stat. 1321, April 26, 1996), and Office of Management and Budget (OMB) Circular A–25, authorize Federal agencies to recover the full cost of services that confer special benefits. Under the Department of the Interior's (DOI) implementing policy, the Minerals Management Service (MMS) is required to charge fees for services that provide special benefits or privileges to an identifiable non-Federal recipient

above and beyond those which accrue to the public at large.

This information collection (IC) request covers 30 CFR Part 250, Subpart A, General. This request also covers the related Notices to Lessees and Operators (NTLs) that MMS issues to clarify and provide additional guidance on some aspects of our regulations.

Requests for MMS approval may contain proprietary information related to performance standards or alternative approaches to conducting operations different from those approved and specified in MMS regulations. We will protect this proprietary information according to the Freedom of Information Act, 30 CFR Part 252, and 30 CFR 250.197, ''Data and information to be made available to the public.'' No items of a sensitive nature are collected. Responses are mandatory.

The MMS uses the information collected under the Subpart A regulations to ensure that operations on the OCS are carried out in a safe and pollution-free manner, do not interfere with the rights of other users on the OCS, and balance the protection and development of OCS resources. Specifically, we use the information collected to:

- Review records of formal crane operator training, rigger training, crane operator qualifications, crane inspections, testing, and maintenance to ensure that lessees perform operations in a safe and workmanlike manner and that equipment is maintained in a safe condition. The MMS also uses the information to make certain that all new and existing cranes installed on OCS fixed platforms must be equipped with anti-two block safety devices, and to assure that uniform methods are employed by lessees for load testing of cranes.
- Review welding, burning, and hot tapping plans, procedures, and records to ensure that these activities are conducted in a safe and workmanlike manner by trained and experienced personnel.
- Provide lessees greater flexibility to comply with regulatory requirements through approval of alternative equipment or procedures and departures to regulations if they demonstrate equal or better compliance with the appropriate performance standards.
- Determine the capability of a well to produce oil or gas in paying quantities or to determine the possible need for additional wells resulting in minimum royalty status on a lease. If a well does not yield hydrocarbons in sufficient quantity to warrant continued operation and production, MMS uses the information to verify the claim and to release the lessee from lease obligations. Conversely, the information is used to extend the term of the lease if additional wells will warrant continued operation and production.
- Ensure that injection of gas promotes conservation of natural resources, prevents waste, and that subsurface storage of natural gas does not unduly interfere with development and production operations under existing leases.
- Ensure the appropriateness of reimbursing lessees for costs incurred in reproducing geological and geophysical (G&G) data and information for submission to MMS and processing or reprocessing G&G information in a form and manner other than that normally used in the conduct of a lessee's business, or to determine the proper reimbursement of costs incurred during inspections.
- Record the designation of an operator authorized to act on behalf of the lessee and to fulfill the lessee's obligations under the OCS Lands Act and implementing regulations, or to record the local agent empowered to receive notices and comply with regulatory orders issued (Form MMS–1123).
- Determine if an application for right-of-use and easement serves the purpose specified in the grant when conducting exploration, development, and production activities or other operations on or off the lease; is maintained for such purposes; and does not unreasonably interfere with the operations of any other lessee.
- Provide for orderly development of leases through the use of information to determine the appropriateness of lessee requests for suspension of operations, including production. For example, MMS needs the information to determine that a suspension is necessary to: (1) Ensure proper lease development, (2) allow time to construct or negotiate use of transportation facilities, (3) allow reasonable time to enter into a sales contract, (4) allow for unavoidable situations, (5) avoid continued operations resulting in premature abandonment of a producing well(s) that would be uneconomic, (6) comply with the National Environmental Policy Act or to conduct an environmental analysis, (7) install equipment for safety and environmental protection, (8) allow time for inordinate delays encountered in obtaining required permits or consents, (9) comply with judicial decrees, or (10) avoid activities that pose a threat of serious, irreparable, or immediate harm.
- Improve safety and environmental protection on the OCS through collection and analysis of accident reports to ascertain the cause of the accidents and to determine ways to prevent recurrences.
- Ascertain when the lease ceases production or when the last well ceases production in order to determine the 180th day after the date of completion of the last production. This requirement is expanded in the final rule to include reporting when lease production is initiated, resumes before the end of the 180-day period after production ceased, and when leaseholding operations occur during the referenced 180-day interval. The MMS will use this information to efficiently maintain the lessee/operator lease status.
- Approve requests to cancel leases.
- Be informed when there could be a major disruption in the availability and supply of natural gas and oil due to natural occurrences/hurricanes, to advise the U.S. Coast Guard (USCG) in case of the need to rescue offshore workers in distress, to monitor damage to offshore platforms and drilling rigs, and to advise the news media and interested public entities when production is shut in and when resumed. The OCS operations produce more than one-quarter of the Nation's natural gas and more than one-sixth of its oil, and it is essential to know when production is interrupted. The Gulf of Mexico Region (GOMR) uses a reporting form for respondents to report evacuation statistics when necessary (Form MMS–132, Evacuation Statistics). It is sent to respondents at the onset of each ''hurricane season'' in the GOMR.
- Allow operators who exhibit unacceptable performance an incremental approach to improving their overall performance prior to a final decision to disqualify an operator or to pursue debarment proceedings through the execution of a performance improvement plan (PIP). The Subpart A regulations do not address the actual process that we will follow in pursuing the disqualification of operators under §§ 250.135 and 250.136. However, our internal enforcement procedures include allowing such operators to demonstrate a commitment to acceptable performance by the submission of a PIP.
- Determine that respondents have corrected all Incidents of Non-Compliance (INC)(s) identified during inspections (Form MMS–1832). The MMS issues this form to the operator. The operator then corrects the INC(s) and returns the form to the MMS Regional Supervisor no later than 14 days.

• Review records of crane inspection, testing, maintenance, and crane operator qualifications to ensure that lessees perform operations in a safe and workmanlike manner and maintain equipment in a safe condition.

Frequency: On occasion, Form MMS–132 (Evacuation Statistics) submitted daily during the emergency situation.

Estimated Number and Description of Respondents: Approximately 190 Federal and 1 State oil and gas or sulphur lessees (potential respondents).

Estimated Reporting and Recordkeeping "Hour" Burden: The currently approved annual reporting burden for this collection is 24,741 hours. The following chart details the individual components and respective hour burden estimates of this ICR. In calculating the burdens, we assumed that respondents perform certain requirements in the normal course of their activities. We consider these to be usual and customary and took that into account in estimating the burden.

Citation 30 CFR 250 subpart A and related forms/NTLs	Reporting or recordkeeping requirement	Hour burden
		Fee
	Reporting	
104; Form MMS–1832	Appeal orders or decisions; appeal INCs	Exempt under 5 CFR 1320.4(a)(2), (c).
109(a); 110	Submit welding, burning, and hot tapping plans	2
115; 116	Request determination of well producibility; submit data & information; notify MMS of test.	3
118; 119; 121; 124	Apply for injection or subsurface storage of gas	10
125(c); 140	Request various oral approvals not specifically covered elsewhere in regulatory requirements.	½
130–133; Form MMS–1832	Submit "green" response copy of Form MMS–1832 indicating date violations (INCs) corrected.	2
	Request reconsideration from issuance of an INC	1
	Request waiver of 14-day response time	½
	Notify MMS before returning to operations if shut-in	¼
133	Request reimbursement for food, quarters, and transportation provided to MMS representatives (OCS Lands Act specifies reimbursement; no requests received in many years; minimal burden).	2
135 MMS internal process	Submit PIP under MMS implementing procedures for enforcement actions	40
141	Request approval to use new or alternative procedures, including BAST not specifically covered elsewhere in regulatory requirements.	20
142	Request approval of departure from operating requirements not specifically covered elsewhere in regulatory requirements.	2
143; 144; 145; Form MMS–1123.	Submit designation of operator & report change of address or notice of termination; submit designation of local agent.	¼ $150 fee.
150; 151; 152; 154(a)	Name and identify facilities, artificial islands, MODUs, etc., with signs	2
150; 154(b)	Name and identify wells with signs	1
160; 161	OCS lessees: Apply for new or modified right-of-use and easement to construct and maintain off-lease platforms, artificial islands, and installations and other devices; including notifications.	5
160(c)	Establish a Company File for qualification; submit updated information, submit qualifications for lessee/bidder, request exception.	Burden included with 30 CFR 256 (1010–0006).
165	State lessees: Apply for new or modified right-of-use and easement to construct and maintain off-lease platforms, artificial islands, and installations and other devices.	5 $2,350 fee.
166	State lessees: Furnish surety bond	Burden included with 30 CFR 256 (1010–0006).
168; 170; 171; 172; 174; 175; 177; 180(b), (d).	Request suspension of operations or production; submit schedule of work leading to commencement.*	10 $1,800 fee.
	Submit progress reports on SOO or SOP as condition of approval.*	2
177(a)	Conduct site-specific study; submit results. No instances requiring this study in several years—could be necessary if a situation occurred such as severe damage to a platform or structure caused by a hurricane or a vessel collision.	100
177(b), (c), (d); 182; 183, 185; 194.	Various references to submitting new, revised, or modified exploration plan, development/production plan, or development operations coordination document, and related surveys/reports.	Burden included with 30 CFR 250, Subpart B (1010–0151).
180(a), (f), (g), (h), (i), (j)	Notify and submit report on various leaseholding operations and lease production activities.	1
180(a), (b), (c)	When requested, submit production data to demonstrate production in paying quantities to maintain lease beyond primary term.	6
180(e)	Request more than 180 days to resume operations	3
181(d); 182(b), 183(b)(2)	Request termination of suspension and cancellation of lease (no requests in recent years for termination/cancellation of a lease; minimal burden).	20
184	Request compensation for lease cancellation mandated by the OCS Lands Act (no qualified lease cancellations in many years; minimal burden compared to benefit).	50
187(d)	Report all spills of oil or other liquid pollutants	Burden covered with 30 CFR 254 (1010–0091).

Citation 30 CFR 250 subpart A and related forms/NTLs	Reporting or recordkeeping requirement	Hour burden
		Fee
187; 188(a); 189; 190(c)	Report to the District Manager immediately via oral communication and written follow-up within 15 calendar days, incidents pertaining to: Fatalities; injuries; LoWC; fires; explosions; all collisions resulting in property or equipment damage >$25K; structural damage to an OCS facility; cranes; incidents that damage or disable safety systems or equipment (including firefighting systems).	Oral 0.2. Written 4.
188(a)(5)	Report to District Manager hydrogen sulfide (H2S) gas releases immediately by oral communication.	Oral burden covered under 30 CFR 250, subpart D (1010–0141).
188(b); 190(a), (b)	Provide written report to the District Manager within 15 calendar days after incidents relating to: Injuries that result in 1 or more days away from work, on restricted work, or job transfer; gas releases that initiate equipment or process shutdown; property or equipment damage >$25K; operations personnel to muster for evacuation not related to weather or drills; any additional information required.	4
191	Submit written statement/compensation re: Accident investigation	Exempt under 3 CFR 1320.4(b).
192; Form MMS–132	Daily report of evacuation statistics for natural occurrence/hurricane (Form MMS–132 in the GOMR) when circumstances warrant; inform MMS when you resume production.	1
193	Report apparent violations or non-compliance	1½
194 NTL exception requests	Request departures from conducting archaeological resources surveys and/or submitting reports in GOMR.	1
194(c)	Report archaeological discoveries (only one instance in many years; minimal burden).	10
196	Submit data/information for post-lease G&G activity and request reimbursement.	Burden included with 30 CFR 251 (1010–0048).
101–199	General departure or alternative compliance requests not specifically covered elsewhere in Subpart A.	2
Recordkeeping		
108(e)	Retain records of design and construction for life of crane, including installation records for any anti-two block safety devices; all inspection, testing, and maintenance for at least 4 years; crane operator and all rigger personnel qualifications for at least 4 years.	2
109(b)	Retain welding, burning, and hot tapping plan and approval for the life of the facility.	½
132(b)(3)	Make available all records related to inspections not specifically covered elsewhere in regulatory requirements.	1

Estimated Reporting and Recordkeeping ''Non-Hour Cost'' Burden: We have identified three non-hour cost burdens. Section 250.143 requires a fee for a change in designation of operator. Section 250.165 requires a State lessee applying for a right-of-use and easement on the OCS to pay a cost recovery application fee. This cost is the same as the fee for a pipeline right-of-way grant specified in 30 CFR 250.1015 and is subject to change based on that regulation. We estimate receiving only one State lease application per year. Section 250.171 requests a fee for either a Suspension of Operations or Production Request (SOO/SOP). We have not identified any other ''non-hour cost'' burdens associated with this collection of information.

Public Disclosure Statement: The PRA (44 U.S.C. 3501, *et seq.*) provides that an agency may not conduct or sponsor a collection of information unless it displays a currently valid OMB control number. Until OMB approves a collection of information, you are not obligated to respond.

Comments: Before submitting an ICR to OMB, PRA section 3506(c)(2)(A) requires each agency '' o=* * * to provide notice o=* * * and otherwise consult with members of the public and affected agencies concerning each proposed collection of information o=* * *''. Agencies must specifically solicit comments to: (a) Evaluate whether the proposed collection of information is necessary for the agency to perform its duties, including whether the information is useful; (b) evaluate the accuracy of the agency's estimate of the burden of the proposed collection of information; (c) enhance the quality, usefulness, and clarity of the information to be collected; and (d) minimize the burden on the respondents, including the use of automated collection techniques or other forms of information technology.

Agencies must also estimate the ''non-hour cost'' burdens to respondents or recordkeepers resulting from the collection of information. Therefore, if you have costs to generate, maintain, and disclose this information, you should comment and provide your total capital and startup cost components or annual operation, maintenance, and purchase of service components. You should describe the methods you use to estimate major cost factors, including system and technology acquisition, expected useful life of capital equipment, discount rate(s), and the period over which you incur costs. Capital and startup costs include, among other items, computers and software you purchase to prepare for collecting information, monitoring, and record storage facilities. You should not include estimates for equipment or services purchased: (i) Before October 1, 1995; (ii) to comply with requirements not associated with the information collection; (iii) for reasons other than to

provide information or keep records for the Government; or (iv) as part of customary and usual business or private practices.

We will summarize written responses to this notice and address them in our submission for OMB approval. As a result of your comments, we will make any necessary adjustments to the burden in our submission to OMB.

Public Comment Procedures: The MMS's practice is to make comments, including names and addresses of respondents, available for public review. If you wish your name and/or address to be withheld, you must state this prominently at the beginning of your comment. The MMS will honor this request to the extent allowable by law; however, anonymous comments will not be considered. There may be circumstances in which we would withhold from the record a respondent's identity, as allowable by the law. If you wish us to withhold your name and/or address, you must state this prominently at the beginning of your comment. In addition, you must present a rationale for withholding this information. This rationale must demonstrate that disclosure ''would constitute an unwarranted invasion of privacy.'' Unsupported assertions will not meet this burden. In the absence of exceptional, documentable circumstances, this information will be released. All submissions from organizations or businesses, and from individuals identifying themselves as representatives or officials of organizations or businesses, will be made available for public inspection in their entirety.

MMS Information Collection Clearance Officer: Arlene Bajusz (202) 208–7744.

Dated: December 6, 2006.

Melinda Mayes,

Acting Chief, Office of Offshore Regulatory Programs.

[FR Doc. E6–21140 Filed 12–12–06; 8:45 am]

BILLING CODE 4310–MR–P

NATIONAL FOUNDATION ON THE ARTS AND THE HUMANITIES

National Endowment for the Arts; Arts Advisory Panel

Pursuant to Section 10(a)(2) of the Federal Advisory Committee Act (Public Law 92–463), as amended, notice is hereby given that five meetings of the Arts Advisory Panel to the National Council on the Arts will be held at the Nancy Hanks Center, 1100 Pennsylvania Avenue, NW., Washington, DC 20506 as follows (ending times are approximate):

State and Regional Partnerships (Partnership Agreements review): January 4–5, 2007 in Room 716. This meeting, from 9 a.m. to 10:15 a.m. and 12:30 p.m. to 5:30 p.m. on January 4th, and from 9 a.m. to 2 p.m. on January 5th, will be open. A policy discussion will be held from 11:30 a.m. to 12:30 p.m. on January 5th.

Visual Arts (application review): January 9–10, 2007 in Room 730. This meeting, from 9 a.m. to 5:30 p.m. on January 9th and from 9 a.m. to 3 p.m. on January 10th, will be closed.

Media Arts (application review): January 10–12, 2007 in Room 716. This meeting, from 9 a.m. to 6 p.m. on January 10th and 11th and from 9 a.m. to 5:30 p.m. on January 12th, will be closed.

Folk and Traditional Arts (nominations review) January 16–19, 2007 in Room 716. This meeting, from 9 a.m. to 6:30 p.m. on January 16th and 17th, from 9 a.m. to 5:30 p.m. on January 18th, and from 9 a.m. to 3:30 p.m. on January 19th, will be closed.

State and Regional Partnerships (Partnership Agreements review): January 24–25, 2007 in Room 716. This meeting, from 9:30 a.m. to 6 p.m. on January 24th, and from 8:30 a.m. to 3:30 p.m. on January 25th, will be open. A policy discussion will be held from 1 p.m. to 2:30 p.m. on January 25th.

The closed portions of meetings are for the purpose of Panel review, discussion, evaluation, and recommendations on financial assistance under the National Foundation on the Arts and the Humanities Act of 1965, as amended, including information given in confidence to the agency. In accordance with the determination of the Chairman of April 8, 2005, these sessions will be closed to the public pursuant to subsection (c)(6) of section 552b of Title 5, United States Code.

Any person may observe meetings, or portions thereof, of advisory panels that are open to the public, and if time allows, may be permitted to participate in the panel's discussions at the discretion of the panel chairman. If you need special accommodations due to a disability, please contact the Office of AccessAbility, National Endowment for the Arts, 1100 Pennsylvania Avenue, NW., Washington, DC 20506, 202/682–5532, TDY–TDD 202/682–5496, at least seven (7) days prior to the meeting.

Further information with reference to these meetings can be obtained from Ms. Kathy Plowitz-Worden, Office of Guidelines & Panel Operations, National Endowment for the Arts, Washington, DC 20506, or call 202/682–5691.

Dated: December 7, 2006.

Kathy Plowitz-Worden,

Panel Coordinator, Panel Operations, National Endowment for the Arts.

[FR Doc. E6–21203 Filed 12–12–06; 8:45 am]

BILLING CODE 7537–01–P

NATIONAL LABOR RELATIONS BOARD

Privacy Act of 1974; Publication of Notices of Systems of Records

AGENCY: National Labor Relations Board (NLRB).

ACTION: Notification of the establishment of twelve systems of records, nine of which consist of an electronic case tracking system and associated paper or electronic files, and the remaining three systems consist of electronic case tracking systems only.

SUMMARY: Pursuant to the provisions of the Privacy Act of 1974, 5 U.S.C. 552a, the Agency publishes this notice of its intention to establish twelve systems of records. Nine of these systems consist of an electronic case tracking system and associated paper or electronic files, and the remaining systems, NLRB–22, NLRB–26, and NLRB–31, consist of electronic case tracking systems only. The electronic case tracking systems and associated paper or electronic files permit the accurate and timely collection, retrieval, and retention of information maintained by offices of the Agency, regarding those offices' handling of matters before them, including unfair labor practice, representation, or Freedom of Information Act cases.

All persons are advised that, in the absence of submitted comments considered by the Agency as warranting modification of the notices as here proposed, it is the intention of the Agency that the notices shall be effective upon expiration of the comment period without further action.

DATES: Written comments must be submitted no later than January 22, 2007.

ADDRESSES: All persons who desire to submit written comments for consideration by the Agency in connection with the proposed notices of systems of records shall file them with the Privacy Officer, National Labor Relations Board, Room 7608, 1099 14th Street, NW., Washington, DC 20570–0001. Comments on these notices may also be submitted electronically to *PrivacyActComments@nlrb.gov.*

Copies of all such comments will be available for examination during normal

business hours (8:30 a.m. to 5 p.m. Monday through Friday, excluding federal holidays) in the Agency's Reading Room, located in the Case Records Unit, National Labor Relations Board, Room 9201, 1099 14th Street, NW., Washington, DC 20570–0001.

FOR FURTHER INFORMATION CONTACT: Tommie Gregg, Sr., Privacy Officer, National Labor Relations Board, Room 7608, 1099 14th Street, NW., Washington, DC 20570–0001, (202) 273–2833, *Tommie.Greggsr@nlrb.gov.*

SUPPLEMENTARY INFORMATION: Pursuant to subsection (k)(2) of the Privacy Act, 5 U.S.C. 552a(k)(2), the Agency proposes to exempt several of the systems of records (or portions of some systems) from the following subsections of the Privacy Act: (c)(3), (d), (e)(1), (e)(4)(G), (e)(4)(H), (e)(4)(I), and (f). The Agency's notice of proposed rulemaking setting forth this proposed exemption appears elsewhere in today's issue of the **Federal Register**.

A report of the proposal to establish these systems of records was filed pursuant to 5 U.S.C. § 552a(r) with Congress and the Office of Management and Budget.

General Prefatory Information

A. All references to the Agency's ''unfair labor practice cases'' in these notices include the portion of such cases known as ''compliance,'' during which the Agency seeks effectuation of remedial provisions of a settlement agreement, Board order, or court judgment enforcing a Board order. (*See* NLRB Casehandling Manual, Part Three—Compliance Proceedings, § 10500.1).

B. Standard Routine Uses of the Records. The following routine uses apply to and are incorporated by reference into most of the systems of records published below, as described below for each system.

Records may be disclosed:

1. To a federal, state, or local agency (including a bar association or other legal licensing authority), charged with the responsibility for investigating, defending, or pursuing violations of law or rule (civil, criminal, or regulatory in nature), in any case in which there is an indication of a violation or potential violation of law or rule;

2. In a federal, state, or local proceeding or hearing, which is administrative, judicial, or regulatory, in accordance with the procedures governing such disclosure and proceeding or hearing, including, but not limited to, National Labor Relations Board Rule § 102.118, 29 CFR § 102.118, and such records are determined by the Agency to be arguably relevant to the litigation;

3. To the Agency's legal representative, including the Department of Justice and other outside counsel, where the Agency is a party in litigation or has an interest in litigation, including when any of the following is a party to litigation or has an interest in such litigation: (a) The Agency, or any component thereof; (b) any employee of the Agency in his or her official capacity; (c) any employee of the Agency in her or her individual capacity, where the Department of Justice has agreed or is considering a request to represent the employee; or (d) the United States, where the Agency determines that litigation is likely to affect the Agency or any of its components;

4. To a party or his or her representative in an Agency administrative unfair labor practice or representation proceeding or related judicial proceeding, for the purpose of: (a) Negotiation or discussion on matters in furtherance of resolving the proceeding; (b) providing such persons with information concerning the progress or results of the Agency administrative or judicial proceeding; or (c) ensuring due process in the Agency's administrative proceedings by disclosing copies of all documents referenced by the Agency's Casehandling Manual, Part One, Unfair Labor Practice Proceedings § 11842 (.1–.3), or releasing documents in accordance with the Board's Rules and Regulations;

5. To any person who, during the course of an Agency administrative unfair labor practice or representation proceeding or related judicial proceeding, is a source for information or assists in such proceeding, to the extent necessary to obtain relevant information or assistance or for a reason compatible with the purpose for which the record was collected;

6. To a federal, state, local, or foreign agency or agent, in order to: (a) Aid in the Agency's collection, administration, and disbursement of remedial funds owed under the NLRA; or (b) assist in collecting an overdue debt owed to the United States by an unfair labor practice respondent;

7. To individuals who need the information in connection with the processing of an internal Agency grievance;

8. To an arbitrator to resolve disputes under a negotiated Agency grievance arbitration procedure;

9. To officials of labor organizations recognized under 5 U.S.C., chapter 71, when disclosure is not prohibited by law, and the data is normally maintained by the Agency in the regular course of business and is necessary for a full and proper discussion, understanding, and negotiation of subjects within the scope of collective bargaining. The foregoing shall have the identical meaning as 5 U.S.C. 7114(b)(4);

10. To a member of Congress or to a congressional staff member in response to an inquiry of the congressional office made at the request of the constituent about whom the records are maintained;

11. To the public, news media, and other individuals and organizations, concerning unfair labor practice or representation proceedings, limited as follows: Administrative unfair labor practice or representation hearings are usually open to the public, pursuant to 29 CFR 102.34 and 102.64, and formal documents (those documents traditionally considered by the Agency to be publicly available) are made available for public inspection under the Freedom of Information Act (FOIA), 5 U.S.C. 552. Additionally, Board decisions are posted on the Agencys Web site at *http://www.nlrb.gov,* see 5 U.S.C. 552(a)(2)(A) and (E), and may be distributed to publishers. Party and party-representative contact information is also made available to the public on the Agency's Web site. Information that would not be exempt from disclosure under the FOIA may also be released to the news media, in order to provide information on events in an administrative or judicial proceeding. Such information that would not be exempt from disclosure under the FOIA is also used to respond to inquiries from governmental, non-profit, business, labor, and legal organizations, as well as academic researchers, concerning pending related legislation and Agency performance;

12. To FOIA requesters, when the Agency discloses requested documents under the circumstances of the Agency's discretionary release policy, set forth in the Agency's FOIA Manual (available on the Agencys Web site at *http:/ www.nlrb.gov*);

13. To the following federal agencies: (a) The Office of Management and Budget in order to obtain advice regarding the Agencys obligations under the Privacy Act, or to assist with the Agency's budget requests; (b) the Department of Justice in order to obtain advice regarding the Agency's obligations under the Freedom of Information Act; or (c) the National Archives and Records Administration, in records management inspections conducted under the authority of 44 U.S.C. 2904 and 2906;

14. To contractors, for the purpose of reproduction, by typing, photocopying, or other means, of any record within the system for use by the Agency;

15. To contractors and other federal agencies, for the purpose of assisting the Agency in further development and continuing maintenance of electronic case tracking systems; and

16. To agencies of the United States Government, or to foreign or international law enforcement or administrative authorities, in order to comply with requirements imposed by, or to claim rights conferred in, international agreements and arrangements in which the United States participates.

Dated: Washington, DC November 15, 2006.

By direction of the Board.

Lester A. Heltzer ,

Executive Secretary.

NLRB–21, Judicial Case Management System-Pending Case List (JCMS–PCL) and Associated Headquarters Files
NLRB–22, Judicial Case Management System-eRoom (JCMS-eRoom)
NLRB–23, Solicitor's System (SOL) and Associated Headquarters Files
NLRB–24, Trial Information Gathered on Electronic Records (TIGER) and Associated Agency Files
NLRB–25, Case Activity Tracking System (CATS) and Associated Regional Office Files
NLRB–26, Litigation Information on the Network (LION)
NLRB–27, Special Litigation Branch Case Tracking System (SPLIT) and Associated Headquarters Files
NLRB–28, Regional Advice and Injunction Litigation System (RAILS) and Associated Headquarters Files
NLRB–29, Work in Progress Database (WIP) and Associated Headquarters Files
NLRB–30, Appeals Case Tracking System (ACTS) and Associated Headquarters Files
NLRB–31, Office of Appeals Extension of Time System (EOTS)
NLRB–32, Freedom of Information Act Tracking System (FTS) and Associated Agency Files

NLRB–21

SYSTEM NAME:

Judicial Case Management System-Pending Case List (JCMS–PCL) and Associated Headquarters Files.

SECURITY CLASSIFICATION:

None.

SYSTEM LOCATION:

Records are stored on paper and electronic media at Agency Headquarters, Office of the Executive Secretary, 1099 14th Street, NW., Washington, DC 20570. Additionally, pursuant to the Agency's flexiplace and telecommuting programs, or due to official travel, JCMS–PCL may also be accessed from alternative worksites via the Internet, including employees' homes. Associated Headquarters Files (or copies of such files) also may be temporarily located at alternative worksites. All appropriate safeguards will be taken at these sites.

CATEGORIES OF INDIVIDUALS COVERED BY THE SYSTEM:

Individual Respondents in unfair labor practice cases before the members of the National Labor Relations Board (''the Board''); individual Employers in representation cases before the Board; current and former Agency employees assigned to cases.

CATEGORIES OF RECORDS IN THE SYSTEM:

(1) Summary information of unfair labor practice and representation cases before the Board (such as names of parties, case status, and Agency personnel assignments) is maintained in an electronic case tracking system, JCMS–PCL. (2) Associated Headquarters Files are paper records established and maintained for processing unfair labor practice and representation proceedings before the Board. These records include the Official Case Records maintained in the Agency's Headquarters. The paper records are administrative and court records (such as unfair labor practice charges, unfair labor practice complaints and answers, representation petitions, briefs, motions and orders), correspondence, legal research memoranda, and other related documents. These records include the names of parties, and Agency employees assigned to the cases. JCMS–PCL and Associated Headquarters Files may include parties' home addresses and home telephone numbers, if such information is provided to the Agency. Portions of these records include civil investigatory and law enforcement information.

AUTHORITY FOR MAINTENANCE OF THE SYSTEM:

29 U.S.C. 159, 160, 161; 44 U.S.C. 3101; and the Government Performance and Results Act of 1993, Pub.L. 103–62, 107 Stat. 285 (codified in sections of Titles 5, 31, and 39 of the U.S. Code).

PURPOSE:

JCMS–PCL is an electronic case tracking system used by the Offices of the Board (Members and their staffs, the Office of Representation Appeals, the Office of the Solicitor, and the Office of the Executive Secretary) to facilitate the accurate and timely collection, retrieval, and retention of information regarding the processing of unfair labor practice and representation cases before the Board. The information and activities tracked by the system may be generated by the parties' filing of briefs, motions, and other documents, or by deliberative, analytical processes undertaken by Board employees assigned to cases. This database stores current and historical information, and is used to generate data for managing the Agency's case processing and resources, creating the Agency's budget, preparing monthly and annual reports of casehandling activities, and providing requested statistical reports to the public. Limited information from JCMS–PCL is imported into NLRB–25, the Case Activity Tracking System (CATS), which is a system of records that tracks cases for the Agency's Regional Offices. Party and party-representative contact information from JCMS–PCL is also made available to the public on the Agency's Web site at *http://www.nlrb.gov.* Associated Headquarters Files are paper files maintained to adjudicate or otherwise resolve matters handled by the Board. These records include the Official Case Records maintained in the Agency's Headquarters. Other offices of the Agency, including the Division of Judges located at Agency Headquarters and the Division of Enforcement Litigation's Appellate Court Branch, also use these records for case processing purposes. JCMS–PCL and Associated Headquarters Files may also be used to assist in evaluating Agency employees.

ROUTINE USES OF RECORDS MAINTAINED IN THE SYSTEM, INCLUDING CATEGORIES OF USERS AND THE PURPOSE OF SUCH USES:

The standard routine uses applying to this system are listed in the General Prefatory Statement to this document.

DISCLOSURE TO CONSUMER REPORTING AGENCIES:

None.

POLICIES AND PRACTICES FOR STORING, RETRIEVING, ACCESSING, RETAINING, AND DISPOSING OF RECORDS IN THE SYSTEM:

STORAGE:

Data is maintained on paper and electronic media.

RETRIEVABILITY:

Data may be retrieved by the names of individual Respondents in unfair labor practice cases before the Board; names of individual Employers in representation cases before the Board; names of current and former Agency employees assigned to cases; as well as by non-personal identifiers, such as case numbers assigned by the Agency.

SAFEGUARDS:

Access to Agency working and storage areas is restricted to Agency employees who have a need to use the information in order to perform their duties, custodial personnel, Federal Protective Service personnel, and other contractor and security personnel. All other persons are required to be escorted in Agency areas. Associated Headquarters Files are maintained in staffed or locked areas during working hours. The facilities are protected from unauthorized access during non-working hours by the Federal Protective Service or other security personnel. Those Agency Headquarters employees who telecommute and may possess Associated Headquarters Files (or copies of such files) at alternative worksites or who may access JCMS–PCL from alternative worksites are instructed as to keeping such information in a secure manner.

Electronic system-based access controls are in place to prevent data misuse. Access to electronic information is controlled by administrators who determine users' authorized access based on each user's office and position within the office. Access criteria, procedures, controls, and responsibilities are documented and consistent with the policies stated in a memorandum titled ''NLRB Access Control Standards, Password Management,'' and dated January 23, 2002. All network users are also warned at the time of each network login that the system is for use by authorized users only, and that unauthorized or improper use is a violation of law.

RETENTION AND DISPOSAL:

JCMS–PCL information will be retained and disposed of in accordance with appropriate Agency schedules that will be submitted to the National Archives and Records Administration (NARA) for its approval. Associated Headquarters Files are disposed of in accordance with the Agency's Disposition Standards Records, as approved by NARA.

SYSTEM MANAGER AND ADDRESS:

Executive Secretary, National Labor Relations Board, Room 11600, 1099 14th Street, NW., Washington, DC 20570–0001.

NOTIFICATION PROCEDURES:

For records not exempted under 5 U.S.C. 552a(k)(2) of the Privacy Act, an individual may inquire as to whether this system contains a record pertaining to such individual by directing a request to the System Manager in accordance with the procedures set forth in 29 CFR § 102.117a(a) (as newly designated in accompanying proposed amended regulations).

RECORD ACCESS PROCEDURE:

For records not exempted under 5 U.S.C. 552a(k)(2) of the Privacy Act, an individual seeking to gain access to records in this system pertaining to such individual should contact the System Manager in accordance with the procedures set forth in 29 CFR § 102.117a(b) and (c) (as newly designated in accompanying proposed amended regulations).

CONTESTING RECORD PROCEDURE:

For records not exempted under 5 U.S.C. § 552a(k)(2) of the Privacy Act, an individual may request amendment of a record in this system pertaining to such individual by directing a request to the System Manager in accordance with the procedures set forth in 29 CFR 102.117a(d) (as newly designated in accompanying proposed amended regulations).

RECORDS SOURCE CATEGORIES:

For records not exempted under 5 U.S.C. § 552a(k)(2) of the Privacy Act, record source categories include parties in unfair labor practice and representation cases; party representatives; witnesses in Board proceedings; and individual Agency employees. Record source categories also include documents relating to the processing of unfair labor practice or representation cases by the Board, such as unfair labor practice charges and complaints, representation petitions, administrative law judge determinations, Board decisions, and decisions from United States courts of appeal. JCMS–PCL also receives electronic data from NLRB–22, JCMS-eRoom.

EXEMPTIONS CLAIMED FOR THE SYSTEM:

Pursuant to 5 U.S.C. 552a(k)(2), the Agency has exempted portions of this system, including records relating to requests pursuant to Section 10(j) of the NLRA (29 U.S.C. 160(j)), requests to pursue federal court contempt proceedings, and certain requests that the Board initiate litigation or intervene in non-Agency litigation, from the following provisions of the Privacy Act: 5 U.S.C. § 552a (c)(3), (d), (e)(1), (e)(4)(G), (e)(4)(H), (e)(4)(l), and (f).

NLRB–22

SYSTEM NAME:

Judicial Case Management System-eRoom (JCMS-eRoom)

SECURITY CLASSIFICATION:

None.

SYSTEM LOCATION:

Records are stored on electronic media at Agency Headquarters, Office of the Executive Secretary, 1099 14th Street, NW., Washington, DC 20570. Additionally, pursuant to the Agency's flexiplace and telecommuting programs, or due to official travel, JCMS-eRoom may also be accessed from alternative worksites via the Internet, including employees' homes. All appropriate safeguards will be taken at these sites.

CATEGORIES OF INDIVIDUALS COVERED BY THE SYSTEM:

Individual Charged Parties and Respondents in unfair labor practice cases before the five-member National Labor Relations Board (''the Board''); individual Employers in representation cases before the Board; current and former Agency employees assigned to cases.

CATEGORIES OF RECORDS IN THE SYSTEM:

Summary information of unfair labor practice and representation cases before the Board (such as names of parties, case status, and Agency personnel assignments) is maintained in an electronic case tracking system, JCMS-eRoom. JCMS-eRoom also provides a collaborative electronic space where documents are contained in a structured repository. These records include the names of parties, and Agency employees assigned to the cases.

AUTHORITY FOR MAINTENANCE OF THE SYSTEM:

29 U.S.C. 159, 160, 161; 44 U.S.C. 3101.

PURPOSE:

JCMS-eRoom is an electronic case tracking system used by the Offices of the Board (Members and their staffs, the Office of Representation Appeals, the Office of the Solicitor, and the Office of the Executive Secretary) to facilitate the accurate and timely collection, retrieval, and retention of information regarding the processing of unfair labor practice and representation cases before the Board. JCMS-eRoom is also used by Board employees to electronically collaborate on the drafting of decisions and disposition of cases. The information and activities tracked by the system may be generated by the parties' filing of briefs, motions, and other documents, or by deliberative, analytical processes undertaken by Board employees assigned to cases. This database stores current and historical information, and is used to generate data for managing the Agency's case processing and resources. Limited information from JCMS-eRoom is imported into NLRB–21, JCMS–PCL.

JCMS-eRoom may also be used to assist in evaluating Agency employees.

ROUTINE USES OF RECORDS MAINTAINED IN THE SYSTEM, INCLUDING CATEGORIES OF USERS AND THE PURPOSE OF SUCH USES:

The standard routine uses applying to this system are listed in the General Prefatory Statement to this document.

DISCLOSURE TO CONSUMER REPORTING AGENCIES:

None.

POLICIES AND PRACTICES FOR STORING, RETRIEVING, ACCESSING, RETAINING, AND DISPOSING OF RECORDS IN THE SYSTEM:

STORAGE:

Data is maintained on electronic media.

RETRIEVABILITY:

Data may be retrieved by the names of individual Charged Parties and Respondents in unfair labor practice cases before the Board; names of individual Employers in representation cases before the Board; names of current and former Agency employees assigned to cases; as well as by non-personal identifiers, such as case numbers assigned by the Agency.

SAFEGUARDS:

Access to Agency working and storage areas is restricted to Agency employees who have a need to use the information in order to perform their duties, custodial personnel, Federal Protective Service personnel, and other contractor and security personnel. All other persons are required to be escorted in Agency areas. The facilities are protected from unauthorized access during non-working hours by the Federal Protective Service or other security personnel. Those Agency Headquarters employees who telecommute and may access JCMS-eRoom from alternative worksites are instructed as to keeping such information in a secure manner.

Electronic system-based access controls are in place to prevent data misuse. Access to electronic information is controlled by administrators who determine users' authorized access based on each user's office and position within the office. Access criteria, procedures, controls, and responsibilities are documented and consistent with the policies stated in a memorandum titled ''NLRB Access Control Standards, Password Management,'' and dated January 23, 2002. All network users are also warned at the time of each network login that the system is for use by authorized users only, and that unauthorized or improper use is a violation of law.

RETENTION AND DISPOSAL:

JCMS-eRoom information will be retained and disposed of in accordance with appropriate Agency schedules that will be submitted to the National Archives and Records Administration (NARA) for its approval.

SYSTEM MANAGER AND ADDRESS:

Executive Secretary, National Labor Relations Board, Room 11600, 1099 14th Street, NW., Washington, DC 20570–0001.

NOTIFICATION PROCEDURES:

An individual may inquire as to whether this system contains a record pertaining to such individual by directing a request to the System Manager in accordance with the procedures set forth in 29 CFR 102.117a(a) (as newly designated in accompanying proposed amended regulations).

RECORD ACCESS PROCEDURE:

An individual seeking to gain access to records in this system pertaining to such individual should contact the System Manager in accordance with the procedures set forth in 29 C.F.R. 102.117a(b) and (c) (as newly designated in accompanying proposed amended regulations).

CONTESTING RECORD PROCEDURE:

An individual may request amendment of a record in this system pertaining to such individual by directing a request to the System Manager in accordance with the procedures set forth in 29 CFR 102.117a(d) (as newly designated in accompanying proposed amended regulations).

RECORDS SOURCE CATEGORIES:

Record source categories include parties in unfair labor practice and representation cases; party representatives; witnesses in Board proceedings; and individual Agency employees. Record source categories also include documents relating to the processing of unfair labor practice or representation cases by the Board, such as unfair labor practice charges and complaints, representation petitions, administrative law judge determinations, Board decisions, and decisions from United States courts of appeal.

EXEMPTIONS CLAIMED FOR THE SYSTEM:

None.

NLRB–23

SYSTEM NAME:

Solicitors System (SOL) and Associated Headquarters Files.

SECURITY CLASSIFICATION:

None.

SYSTEM LOCATION:

Records are stored on paper and electronic media at Agency Headquarters, Office of the Solicitor, 1099 14th Street, NW., Washington, DC 20570. Additionally, pursuant to the Agency's flexiplace and telecommuting programs, or due to official travel, Associated Headquarters Files (or copies of such files) also may be temporarily located at alternative worksites. All appropriate safeguards will be taken at these sites.

CATEGORIES OF INDIVIDUALS COVERED BY THE SYSTEM:

Individual Charged Parties and Respondents in unfair labor practice case matters regarding which the Office of the Solicitor advises the five-member National Labor Relations Board (''the Board''); individual Employers in representation case matters regarding which the Office of the Solicitor advises the Board; non-Agency attorneys who are the subjects of disciplinary proceedings under Section 102.177 of the Board's Rules and Regulations; individuals who have filed petitions for rulemaking with the Board; current and former Agency employees assigned to cases.

CATEGORIES OF RECORDS IN THE SYSTEM:

(1) Summary information (such as names of parties, case status, and Agency personnel assignments) of matters regarding which the Office of the Solicitor advises the Board (including limited unfair labor practice and representation case matters, requests to initiate litigation or intervene in non-Board litigation, cases under Section 102.177 of the Board's Rules and Regulations, and petitions for rulemaking) is maintained in an electronic case tracking system, SOL. (2) Associated Headquarters Files are paper records established and maintained for processing the matters regarding which the Office of the Solicitor advises the Board. The paper records are administrative and court records (such as unfair labor practice charges, unfair labor practice complaints and answers, representation petitions, briefs, motions and orders), Section 102.177 charges and complaints, petitions for rulemaking, correspondence, and intra-agency memoranda (such as requests for authorization from the Board to initiate court litigation, legal research memoranda, and other related documents). These records include the names of parties and Agency employees assigned to the cases. SOL and

Associated Headquarters Files may include parties' home addresses and home telephone numbers, if such information is provided to the Agency. Portions of these records include civil investigatory and law enforcement information.

AUTHORITY FOR MAINTENANCE OF THE SYSTEM:

29 U.S.C. 159, 160, 161; 44 U.S.C. 3101.

PURPOSE:

SOL is an electronic case tracking system used by the Office of the Solicitor to facilitate the accurate and timely collection, retrieval, and retention of information regarding the processing of unfair labor practice, representation, and other case matters regarding which the Office of the Solicitor advises the Board. The information and activities tracked by the system may be generated by the parties' filing of briefs, motions, and other documents, or by deliberative, analytical processes undertaken by Board employees assigned to cases. This database stores current and historical information, and is used to generate data for managing the Agency's case processing and resources, and preparing quarterly and annual reports of casehandling activities. Associated Headquarters Files are paper files maintained to aid in resolving matters advised on by the Solicitor's Office. The Associated Headquarters Files may also be used to assist in evaluating Agency employees.

ROUTINE USES OF RECORDS MAINTAINED IN THE SYSTEM, INCLUDING CATEGORIES OF USERS AND THE PURPOSE OF SUCH USES:

The standard routine uses applying to this system are listed in the General Prefatory Statement to this document.

DISCLOSURE TO CONSUMER REPORTING AGENCIES:

None.

POLICIES AND PRACTICES FOR STORING, RETRIEVING, ACCESSING, RETAINING, AND DISPOSING OF RECORDS IN THE SYSTEM:

STORAGE:

Data is maintained on paper and electronic media.

RETRIEVABILITY:

Data may be retrieved by the names of individual Charged Parties and Respondents in unfair labor practice case matters regarding which the Office of the Solicitor advises the Board; names of individual Employers in representation case matters regarding which the Office of the Solicitor advises the Board; names of non-Agency attorneys who are the subjects of disciplinary proceedings under Board Rule and Regulation Section 102.177; names of individuals who have filed petitions for rulemaking with the Board; names of current and former Agency employees assigned to cases; as well as by non-personal identifiers, such as case numbers assigned by the Agency.

SAFEGUARDS:

Access to Agency working and storage areas is restricted to Agency employees who have a need to use the information in order to perform their duties, custodial personnel, Federal Protective Service personnel, and other contractor and security personnel. All other persons are required to be escorted in Agency areas. Associated Headquarters Files are maintained in staffed or locked areas during working hours. The facilities are protected from unauthorized access during non-working hours by the Federal Protective Service or other security personnel. Those Agency Headquarters employees who telecommute and may possess Associated Headquarters Files (or copies of such files) at alternative worksites are instructed as to keeping such information in a secure manner.

Electronic system-based access controls are in place to prevent data misuse. Access to electronic information is controlled by administrators who determine users' authorized access based on each user's office and position within the office. Access criteria, procedures, controls, and responsibilities are documented and consistent with the policies stated in a memorandum titled ''NLRB Access Control Standards, Password Management,'' and dated January 23, 2002. All network users are also warned at the time of each network login that the system is for use by authorized users only, and that unauthorized or improper use is a violation of law.

RETENTION AND DISPOSAL:

SOL information will be retained and disposed of in accordance with appropriate Agency schedules that will be submitted to the National Archives and Records Administration (NARA) for its approval. Associated Headquarters Files are disposed of in accordance with the Agency's Disposition Standards Records, as approved by NARA.

SYSTEM MANAGER AND ADDRESS:

Solicitor, National Labor Relations Board, Room 11800, 1099 14th Street, NW, Washington, DC 20570–0001

NOTIFICATION PROCEDURES:

For records not exempted under 5 U.S.C. 552a(k)(2) of the Privacy Act, an individual may inquire as to whether this system contains a record pertaining to such individual by directing a request to the System Manager in accordance with the procedures set forth in 29 CFR 102.117a(a) (as newly designated in accompanying proposed amended regulations).

RECORD ACCESS PROCEDURE:

For records not exempted under 5 U.S.C. 552a(k)(2) of the Privacy Act, an individual seeking to gain access to records in this system pertaining to such individual should contact the System Manager in accordance with the procedures set forth in 29 CFR 102.117a(b) and (c) (as newly designated in accompanying proposed amended regulations).

CONTESTING RECORD PROCEDURE:

For records not exempted under 5 U.S.C. 552a(k)(2) of the Privacy Act, an individual may request amendment of a record in this system pertaining to such individual by directing a request to the System Manager in accordance with the procedures set forth in 29 CFR 102.117a(d) (as newly designated in accompanying proposed amended regulations).

RECORDS SOURCE CATEGORIES:

For records not exempted under 5 U.S.C. 552a(k)(2) of the Privacy Act, record source categories include parties in unfair labor practice cases, representation cases, Section 102.177 cases, and petitions for rulemaking; party representatives; witnesses in Board proceedings; and individual Agency employees. Record source categories also include documents relating to the processing of cases regarding which the Solicitor is advising the Board, such as unfair labor practice charges and complaints, representation petitions, administrative law judge determinations, Board decisions, and decisions from United States courts of appeal.

EXEMPTIONS CLAIMED FOR THE SYSTEM:

Pursuant to 5 U.S.C. 552a(k)(2), the Agency has exempted portions of this system, including records relating to requests pursuant to Section 10(j) of the NLRA (29 U.S.C. 160(j)), requests to pursue federal court contempt proceedings, and certain requests that the Board initiate litigation or intervene in non-Agency litigation, from the following provisions of the Privacy Act: U.S.C. 552a (c)(3), (d), (e)(1), (e)(4)(G), (e)(4)(H), (e)(4)(l), and (f).

NLRB–24

SYSTEM NAME:

Trial Information Gathered on Electronic Records (TIGER) and Associated Agency Files.

SECURITY CLASSIFICATION:

None.

SYSTEM LOCATION:

Records are stored on electronic media at Agency Headquarters, Division of Judges, and on paper and electronic media at the Division of Judges' satellite offices in San Francisco, California, New York, New York, and Atlanta, Georgia. *See* attached Appendix for addresses. Additionally, pursuant to the Agency's flexiplace and telecommuting programs, or due to official travel, TIGER may also be accessed from alternative worksites via the Internet, including employees' homes. Associated Agency Files (or copies of such files) also may be temporarily located at alternative worksites. All appropriate safeguards will be taken at these sites.

CATEGORIES OF INDIVIDUALS COVERED BY THE SYSTEM:

Individual Respondents in pending unfair labor practice cases before the Division of Judges and individual Employers in pending representation cases before the Division of Judges; Agency Administrative Law Judges assigned to pending cases.

CATEGORIES OF RECORDS IN THE SYSTEM:

(1) Summary information of pending unfair labor practice and representation cases before the Division of Judges (such as names of parties, case status, and Agency Administrative Law Judges assigned to cases) is maintained in an electronic case tracking system, TIGER. (2) Associated Agency Files are paper records established and maintained for processing unfair labor practice and representation cases before the Division of Judges. The paper records are administrative records (such as unfair labor practice charges, unfair labor practice complaints and answers, representation petitions, briefs, motions and orders), correspondence, legal memoranda, and other related documents. These records include the names of parties and Agency Administrative Law Judges assigned to the cases. Some of these paper records are electronically scanned and placed in an eRoom for the Division of Judges to use in resolving cases. Both TIGER and the Associated Agency Files may include parties' home addresses and home telephone numbers, if such information is provided to the Agency.

AUTHORITY FOR MAINTENANCE OF THE SYSTEM:

5 U.S.C. 554(d), 556, 557, 3105; 29 U.S.C. 153(d), 159, 160, 161; 44 U.S.C. 3101.

PURPOSE:

TIGER is an electronic case tracking system used by the Agency's Division of Judges to facilitate the accurate and timely collection, retrieval, and retention of information regarding unfair labor practice and representation cases before the Division. The information and activities tracked by the system may be generated by the parties' filing of briefs, motions, and other documents, or by deliberative, analytical processes undertaken by the Agency's Administrative Law Judges or their staffs. This database stores current and historical information, and is used to generate data for managing the Agency's case processing and resources, creating the Agency's budget, preparing monthly and annual reports of casehandling activities, and providing requested statistical reports to the public. Associated Agency Files are paper files maintained to adjudicate or otherwise resolve matters handled by the Division of Judges.

ROUTINE USES OF RECORDS MAINTAINED IN THE SYSTEM, INCLUDING CATEGORIES OF USERS AND THE PURPOSE OF SUCH USES:

The standard routine uses applying to this system are listed in the General Prefatory Statement to this document.

DISCLOSURE TO CONSUMER REPORTING AGENCIES:

None.

POLICIES AND PRACTICES FOR STORING, RETRIEVING, ACCESSING, RETAINING, AND DISPOSING OF RECORDS IN THE SYSTEM:

STORAGE:

Data is maintained on paper and electronic media.

RETRIEVABILITY:

Data may be retrieved by names of individual Respondents in pending unfair labor practice cases before the Division of Judges; names of individual Employers in pending representation cases before the Division of Judges; individual numeric codes for Agency Administrative Law Judges assigned to pending cases; as well as by non-personal identifiers, such as case numbers assigned by the Agency.

SAFEGUARDS:

Access to Agency working and storage areas is restricted to Agency employees who have a need to use the information in order to perform their duties, custodial personnel, Federal Protective Service personnel, and other contractor and security personnel. All other persons are required to be escorted in Agency areas. Associated Agency Files are maintained in staffed or locked areas during working hours. The facilities are protected from unauthorized access during non-working hours by the Federal Protective Service or other security personnel. Those Agency employees who telecommute and may possess Associated Agency Files (or copies of such files) at alternative worksites or who may access TIGER from alternative worksites are instructed as to keeping such information in a secure manner.

Electronic system-based access controls are in place to prevent data misuse. Access to electronic information is controlled by administrators who determine users' authorized access based on each user's office and position within the office. Access criteria, procedures, controls, and responsibilities are documented and consistent with the policies stated in a memorandum titled ''NLRB Access Control Standards, Password Management,'' and dated January 23, 2002. All network users are also warned at the time of each network login that the system is for use by authorized users only, and that unauthorized or improper use is a violation of law.

RETENTION AND DISPOSAL:

TIGER information will be retained and disposed of in accordance with appropriate Agency schedules that will be submitted to the National Archives and Records Administration (NARA) for its approval. Associated Agency Files are disposed of in accordance with the Agency's Disposition Standards Records, as approved by NARA.

SYSTEM MANAGER AND ADDRESS:

Chief Administrative Law Judge, Division of Judges, National Labor Relations Board, Room 5400, 1099 14th Street, NW., Washington, DC 20570–0001.

NOTIFICATION PROCEDURE:

An individual may inquire as to whether this system contains a record pertaining to such individual by directing a request to the System Manager in accordance with the procedures set forth in 29 CFR 102.117a(a) (as newly designated in accompanying proposed amended regulations).

RECORD ACCESS PROCEDURE:

An individual seeking to gain access to records in this system pertaining to such individual should contact the System Manager in accordance with the

procedures set forth in 29 CFR 102.117a(b) and (c) (as newly designated in accompanying proposed amended regulations).

CONTESTING RECORD PROCEDURE:

An individual may request amendment of a record in this system pertaining to such individual by directing a request to the System Manager in accordance with the procedures set forth in 29 CFR 102.117a(d) (as newly designated in accompanying proposed amended regulations).

RECORDS SOURCE CATEGORIES:

Record source categories include parties in unfair labor practice and representation cases; party representatives; and witnesses in Board proceedings. Record source categories also include official documents from the record of unfair labor practice and representation cases before the Division of Judges, such as unfair labor practice charges and complaints, representation petitions, exhibits to administrative proceedings, administrative law judge determinations, Board decisions, and decisions from United States courts of appeal.

EXEMPTIONS CLAIMED FOR THE SYSTEM:

None.

NLRB–25

SYSTEM NAME:

Case Activity Tracking System (CATS) and Associated Regional Office Files.

SECURITY CLASSIFICATION:

None.

SYSTEM LOCATION:

Records are stored on paper and electronic media at Agency Headquarters and the Regional Offices. *See* attached Appendix for addresses. Additionally, pursuant to the Agency's flexiplace and telecommuting programs, or due to official travel, CATS may also be accessed from alternative worksites via the Internet, including employees' homes. Associated Regional Office Files (or copies of such files) also may be temporarily located at alternative worksites. All appropriate safeguards will be taken at these sites.

CATEGORIES OF INDIVIDUALS COVERED BY THE SYSTEM:

Individual parties in unfair labor practice and representation cases before the Agency's Regional Offices; current and former Agency employees assigned to cases.

CATEGORIES OF RECORDS IN THE SYSTEM:

(1) Summary information of unfair labor practice and representation cases before the Regional Offices (such as names of parties, case status, and Agency personnel assignments) is maintained in the electronic case tracking system, CATS. (2) Associated Regional Office Files are paper and electronic records established and maintained for processing unfair labor practice and representation proceedings before the Regional Offices. The paper records are administrative and court records (such as unfair labor practice charges, unfair labor practice complaints and answers, representation petitions, briefs, motions and orders), correspondence, legal research memoranda, and other related documents. These records include the names of parties and current and former Agency employees assigned to cases. Both CATS and the Associated Regional Office Files may include parties'' home addresses and home telephone numbers, if such information is provided to the Agency. These records include civil investigatory and law enforcement information.

AUTHORITY FOR MAINTENANCE OF THE SYSTEM:

29 U.S.C. 153(d), 159, 160, 161; 44 U.S.C. 3101; and the Government Performance and Results Act of 1993, Pub.L. 103–62, 107 Stat. 285 (codified in sections of Titles 5, 31, and 39 of the U.S. Code).

PURPOSE:

CATS is an electronic case tracking system used by the Division of Operations Management and the Regional Offices of the Agency to facilitate the accurate and timely collection, retrieval, and retention of information regarding unfair labor practice and representation cases handled by the Agency. The information and activities tracked by the system may be generated by the parties' filing of unfair labor practice charges, representation petitions, briefs, motions, and other documents, or by deliberative, analytical processes undertaken by the Agency's employees. This database stores current and historical information, and is used to generate data for managing the Agency's case processing and resources, creating the Agency's budget, preparing monthly and annual reports of casehandling activities, and providing requested statistical reports to the public. Limited information in CATS is exported into JCMS–PCL. The Associated Regional Office Files are paper files maintained to litigate or otherwise resolve matters handled by the Agency. The Associated Regional Office Files may be temporarily transferred to offices at Agency Headquarters, in order to aid in resolving cases handled by those offices. In addition, some Regional Office Files are electronically scanned and placed in an eRoom for the Agency's use in resolving cases. CATS and the Associated Regional Office Files may also be used to assist in evaluating Agency employee performance.

ROUTINE USES OF RECORDS MAINTAINED IN THE SYSTEM, INCLUDING CATEGORIES OF USERS AND THE PURPOSE OF SUCH USES:

The standard routine uses applying to this system are listed in the General Prefatory Statement to this document.

DISCLOSURE TO CONSUMER REPORTING AGENCIES:

None.

POLICIES AND PRACTICES FOR STORING, RETRIEVING, ACCESSING, RETAINING, AND DISPOSING OF RECORDS IN THE SYSTEM:

STORAGE:

Data is maintained on paper and electronic media.

RETRIEVABILITY:

Data may be retrieved by names of individual parties in unfair labor practice and representation cases before the Agency's Regional Offices; names of current and former Agency employees assigned to those cases; as well as by non-personal identifiers, such as case numbers assigned by the Agency.

SAFEGUARDS:

Access to Agency working and storage areas is restricted to Agency employees who have a need to use the information in order to perform their duties, custodial personnel, Federal Protective Service personnel, and other contractor and security personnel. All other persons are required to be escorted in Agency areas. Regional Office Files are maintained in staffed or locked areas during working hours. The facilities are protected from unauthorized access during non-working hours by the Federal Protective Service or other security personnel. Those Agency employees who telecommute and may possess Regional Office Files (or copies of such files) at alternative worksites or who may access CATS from alternative worksites are instructed as to keeping such information in a secure manner.

Electronic system-based access controls are in place to prevent data misuse. Access to electronic information is controlled by administrators who determine users' authorized access based on each user's office and position within the office. Access criteria, procedures, controls, and

responsibilities are documented and consistent with the policies stated in a memorandum titled ''NLRB Access Control Standards, Password Management,'' and dated January 23, 2002. All network users are also warned at the time of each network login that the system is for use by authorized users only, and that unauthorized or improper use is a violation of law.

RETENTION AND DISPOSAL:

CATS information will be retained and disposed of in accordance with appropriate Agency schedules that will be submitted to the National Archives and Records Administration (NARA) for its approval. Regional Office Files are disposed of in accordance with the Agency's Disposition Standards Records, as approved by NARA.

SYSTEM MANAGER AND ADDRESS:

Associate General Counsel, Division of Operations Management, National Labor Relations Board, Room 10200, 1099 14th Street, NW., Washington, DC 20570–0001.

NOTIFICATION PROCEDURE:

This system is exempt from this provision of the Privacy Act pursuant to 5 U.S.C. 552a(k)(2).

RECORD ACCESS PROCEDURE:

This system is exempt from this provision of the Privacy Act pursuant to 5 U.S.C. 552a(k)(2).

CONTESTING RECORD PROCEDURE:

This system is exempt from this provision of the Privacy Act pursuant to 5 U.S.C.552a(k)(2).

RECORDS SOURCE CATEGORIES:

This system is exempt from this provision of the Privacy Act pursuant to 5 U.S.C. 552a(k)(2).

EXEMPTIONS CLAIMED FOR THE SYSTEM:

Pursuant to 5 U.S.C. 552a(k)(2), the Agency has exempted this system from the following provisions of the Privacy Act: 5 U.S.C. 552a (c)(3), (d), (e)(1), (e)(4)(G), (e)(4)(H), (e)(4)(I), and (f).

NLRB–26

SYSTEM NAME:

Litigation Information on the Network (LION).

SECURITY CLASSIFICATION:

None.

SYSTEM LOCATION:

Records are stored on electronic media at Agency Headquarters, Appellate Court Branch, Division of Enforcement Litigation, 1099 14th Street, NW., Washington, DC 20570. Additionally, pursuant to the Agency's flexiplace and telecommuting programs, or due to official travel, LION may also be accessed from alternative worksites via the Internet, including employees' homes. All appropriate safeguards will be taken at these sites.

CATEGORIES OF INDIVIDUALS COVERED BY THE SYSTEM:

Individual Respondents before the Board in cases handled by the Appellate Court Branch; individual Charging Parties who have filed petitions for review in the federal courts of appeals; individual parties who have intervened in federal courts of appeals proceedings handled by the Appellate Court Branch; current and former Agency legal technicians assigned to cases.

CATEGORIES OF RECORDS IN THE SYSTEM:

Summary information of cases handled by the Appellate Court Branch in the federal courts of appeals (such as names of parties, case status, Agency personnel assignments, brief due dates, oral argument dates, and court judgment dates) is maintained in an electronic case tracking system, LION. LION may include parties' home addresses and home telephone numbers, if such information is provided to the Agency. Any paper records associated with LION are placed within the Associated Headquarters Files for JCMS–PCL (NLRB–21).

AUTHORITY FOR MAINTENANCE OF THE SYSTEM:

29 U.S.C. 159, 160(e) and (f); 44 U.S.C. 3101.

PURPOSE:

LION is an electronic case tracking system used by the Appellate Court Branch to facilitate the accurate and timely collection, retrieval, and retention of information regarding unfair labor practice cases referred to the Branch for enforcement or review in the federal courts of appeals, pursuant to section 10(e) and (f) of the National Labor Relations Act, 29 U.S.C. 160(e) and (f). The information and activities tracked by the system may be generated by the parties' filing of briefs, motions, and other documents, or by orders or other documents received from the courts of appeals. This database stores current and historical information, and is used to generate data for managing the Agency's case processing and resources, creating the Agency's budget, preparing monthly and annual reports of casehandling activities, and providing requested statistical reports to the public. Limited information from LION is exported into JCMS–PCL.

ROUTINE USES OF RECORDS MAINTAINED IN THE SYSTEM, INCLUDING CATEGORIES OF USERS AND THE PURPOSE OF SUCH USES:

The standard routine uses applying to this system are listed in the General Prefatory Statement to this document.

DISCLOSURE TO CONSUMER REPORTING AGENCIES:

None.

POLICIES AND PRACTICES FOR STORING, RETRIEVING, ACCESSING, RETAINING, AND DISPOSING OF RECORDS IN THE SYSTEM:

STORAGE:

Data is maintained on electronic media.

RETRIEVABILITY:

Data may be retrieved by names of Individual Respondents before the Board in cases handled by the Appellate Court Branch; names of individual Charging Parties who have filed petitions for review in the federal courts of appeals; names of individual parties who have intervened in federal courts of appeals proceedings handled by the Appellate Court Branch; names of current and former Agency legal technicians; as well as by non-personal identifiers, such as case numbers assigned by the Agency.

SAFEGUARDS:

Access to Agency working and storage areas is restricted to Agency employees who have a need to use the information in order to perform their duties, custodial personnel, Federal Protective Service personnel, and other contractor and security personnel. All other persons are required to be escorted in Agency areas. The facilities are protected from unauthorized access during non-working hours by the Federal Protective Service or other security personnel. Those Agency Headquarters employees who telecommute and may access LION from alternative worksites are instructed as to keeping such information in a secure manner.

Electronic system-based access controls are in place to prevent data misuse. Access to electronic information is controlled by administrators who determine users' authorized access based on each user's office and position within the office. Access criteria, procedures, controls, and responsibilities are documented and consistent with the policies stated in a memorandum titled ''NLRB Access Control Standards, Password Management,'' and dated January 23, 2002. All network users are also warned at the time of each network login that the system is for use by authorized users

only, and that unauthorized or improper use is a violation of law.

RETENTION AND DISPOSAL:

LION information will be retained and disposed of in accordance with appropriate Agency schedules that will be submitted to the National Archives and Records Administration (NARA) for its approval.

SYSTEM MANAGER AND ADDRESS:

Deputy Associate General Counsel, Appellate Court Branch, National Labor Relations Board, Room 8100, 1099 14th Street, NW., Washington, DC 20570–0001.

NOTIFICATION PROCEDURE:

An individual may inquire as to whether this system contains a record pertaining to such individual by directing a request to the System Manager in accordance with the procedures set forth in 29 CFR 102.117a(a) (as newly designated in accompanying proposed amended regulations).

RECORD ACCESS PROCEDURE:

An individual seeking to gain access to records in this system pertaining to such individual should contact the System Manager in accordance with the procedures set forth in 29 CFR 102.117a(b) and (c) (as newly designated in accompanying proposed amended regulations).

CONTESTING RECORD PROCEDURE:

An individual may request amendment of a record in this system pertaining to such individual by directing a request to the System Manager in accordance with the procedures set forth in 29 CFR 102.117a(d) (as newly designated in accompanying proposed amended regulations).

RECORDS SOURCE CATEGORIES:

Record source categories include parties in unfair labor practice cases, and official documents from the administrative and court records of unfair labor practice cases handled by the Appellate Court Branch, such as unfair labor practice charges and complaints, exhibits to administrative proceedings, administrative law judge determinations, Board decisions, and decisions from United States courts of appeal.

EXEMPTIONS CLAIMED FOR THE SYSTEM:

None.

NLRB–27

SYSTEM NAME:

Special Litigation Branch Case Tracking System (SPLIT) and Associated Headquarters Files.

SECURITY CLASSIFICATION:

None.

SYSTEM LOCATION:

Records are stored on paper and electronic media at Agency Headquarters, Special Litigation Branch, Division of Enforcement Litigation, 1099 14th Street, NW., Washington, DC 20570. Additionally, pursuant to the Agency's flexiplace and telecommuting programs, or due to official travel, Associated Headquarters Files (or copies of such files) also may be temporarily located at alternative worksites. All appropriate safeguards will be taken at these sites.

CATEGORIES OF INDIVIDUALS COVERED BY THE SYSTEM:

Individual parties or potential parties in matters referred to or handled by the Special Litigation Branch of the Division of Enforcement Litigation; current and former Agency employees assigned to cases.

CATEGORIES OF RECORDS IN THE SYSTEM:

(1) Summary information of matters handled by the Special Litigation Branch (such as names of parties, case status, case type, due dates for court filings, and Agency personnel assignments) is maintained in an electronic case tracking system, SPLIT. (2) Associated Headquarters Files are paper records established and maintained for processing Special Litigation Branch matters. The paper records are administrative and court records (such as unfair labor practice and court complaints and answers, transcripts, exhibits, briefs, motions, Board decisions, court opinions and orders made in the adjudication of cases, and case-docketing information), correspondence, legal research memoranda, and other related documents. Both SPLIT and the Associated Headquarters Files may include parties' home addresses and home telephone numbers, if such information is provided to the Agency. Portions of these records include civil investigatory and law enforcement information.

AUTHORITY FOR MAINTENANCE OF THE SYSTEM:

29 U.S.C. 153(d), 159, 160, 161; 44 U.S.C. 3101.

PURPOSE:

SPLIT is an electronic case tracking system used by the Special Litigation Branch to facilitate the accurate and timely collection, retrieval, and retention of information regarding the Branch's cases, including those brought under the National Labor Relations Act, the Equal Access to Justice Act, the Freedom of Information Act, the Bankruptcy Code, the Privacy Act, and actions brought to mandate or prohibit specific conduct by the Board, the General Counsel and other Agency personnel. The information and activities tracked by the system may be generated by the parties' filing of briefs, motions, and other documents, by orders or other documents received from the Agency, bankruptcy courts, district courts, and courts of appeals, or by analytical processes undertaken by Board employees assigned to cases. This database stores current and historical information, and is used to generate data for managing the Agency's case processing and resources, creating the Agency's budget, preparing monthly and annual reports of casehandling activities, and providing requested statistical reports to the public. The Associated Headquarters Files are paper files maintained to litigate or otherwise resolve matters handled by the Branch. SPLIT and the Associated Headquarters Files may also be used to assist in evaluating Agency employee performance.

ROUTINE USES OF RECORDS MAINTAINED IN THE SYSTEM, INCLUDING CATEGORIES OF USERS AND THE PURPOSE OF SUCH USES:

The standard routine uses applying to this system are listed in the General Prefatory Statement to this document.

DISCLOSURE TO CONSUMER REPORTING AGENCIES:

None.

POLICIES AND PRACTICES FOR STORING, RETRIEVING, ACCESSING, RETAINING, AND DISPOSING OF RECORDS IN THE SYSTEM:

STORAGE:

Data is maintained on paper and electronic media.

RETRIEVABILITY:

Data may be retrieved by names of individual parties or potential parties in matters referred to or handled by the Special Litigation Branch; names of current and former Agency employees assigned to cases; as well as by non-personal identifiers, such as case names and numbers assigned by the Branch.

SAFEGUARDS:

Access to Agency working and storage areas is restricted to Agency employees who have a need to use the information in order to perform their duties, custodial personnel, Federal Protective

Service personnel, and other contractor and security personnel. All other persons are required to be escorted in Agency areas. Associated Headquarters Files are maintained in staffed or locked areas during working hours. The facilities are protected from unauthorized access during non-working hours by the Federal Protective Service or other security personnel. Those Agency Headquarters employees who telecommute and may possess Associated Headquarters Files (or copies of such files) at alternative worksites are instructed as to keeping such information in a secure manner.

Electronic system-based access controls are in place to prevent data misuse. Access to electronic information is controlled by administrators who determine users authorized access based on each user's office and position within the office. Access criteria, procedures, controls, and responsibilities are documented and consistent with the policies stated in a memorandum titled NLRB Access Control Standards, Password Management,'' and dated January 23, 2002. All network users are also warned at the time of each network login that the system is for use by authorized users only, and that unauthorized or improper use is a violation of law.

RETENTION AND DISPOSAL:

SPLIT information will be retained and disposed of in accordance with appropriate Agency schedules that will be submitted to the National Archives and Records Administration (NARA) for its approval. Associated Headquarters Files are disposed of in accordance with the Agency's Disposition Standards Records, as approved by NARA.

SYSTEM MANAGER AND ADDRESS:

Assistant General Counsel, Special Litigation Branch, National Labor Relations Board, Room 8600, 1099 14th Street, NW., Washington, DC 20570–0001.

NOTIFICATION PROCEDURES:

For records not exempted under 5 U.S.C. 552a(k)(2) of the Privacy Act, an individual may inquire as to whether this system contains a record pertaining to such individual by directing a request to the System Manager in accordance with the procedures set forth in 29 CFR 102.117a(a) (as newly designated in accompanying proposed amended regulations).

RECORD ACCESS PROCEDURE:

For records not exempted under 5 U.S.C. 552a(k)(2) of the Privacy Act, an individual seeking to gain access to records in this system pertaining to such individual should contact the System Manager in accordance with the procedures set forth in 29 CFR § 102.117a(b) and (c) (as newly designated in accompanying proposed amended regulations).

CONTESTING RECORD PROCEDURE:

For records not exempted under 5 U.S.C. 552a(k)(2) of the Privacy Act, an individual may request amendment of a record in this system pertaining to such individual by directing a request to the System Manager in accordance with the procedures set forth in 29 CFR § 102.117a(d) (as newly designated in accompanying proposed amended regulations).

RECORDS SOURCE CATEGORIES:

For records not exempted under 5 U.S.C. 552a(k)(2) of the Privacy Act, record source categories include parties in cases and potential cases before the Special Litigation Branch, and administrative and court records in matters handled by the Special Litigation Branch (such as unfair labor practice complaints, transcripts, exhibits, briefs, motions, Board decisions, court opinions and orders made in the adjudication of cases, and case-docketing information), correspondence, legal research memoranda, and other related documents.

EXEMPTIONS CLAIMED FOR THE SYSTEM:

Pursuant to 5 U.S.C. 552a(k)(2), the Agency has exempted portions of this system, including records relating to investigative subpoena enforcement cases, injunction and mandamus actions regarding Agency cases under investigation, bankruptcy claims in cases under investigation, Freedom of Information Act cases involving investigatory records, and certain requests that the Board initiate litigation or intervene in non-Agency litigation, from the following provisions of the Privacy Act: 5 U.S.C. 552a(c)(3), (d), (e)(1), (e)(4)(G), (e)(4)(H), (e)(4)(l), and (f).

NLRB–28

SYSTEM NAME:

Regional Advice and Injunction Litigation System (RAILS) and Associated Headquarters Files.

SECURITY CLASSIFICATION:

None.

SYSTEM LOCATION:

Records are stored on paper and electronic media at Agency Headquarters, Division of Advice, 1099 14th Street, NW., Washington, DC 20570. Additionally, pursuant to the Agency's flexiplace and telecommuting programs, or due to official travel, RAILS may also be accessed from alternative worksites via the Internet, including employees' homes. Associated Headquarters Files (or copies of such files) also may be temporarily located at alternative worksites. All appropriate safeguards will be taken at these sites.

CATEGORIES OF INDIVIDUALS COVERED BY THE SYSTEM:

Individual Charged Parties and individual Respondents in unfair labor practice cases referred to the Regional Advice and Injunction Litigation Branches of the Division of Advice, including cases involving temporary injunctive relief under Section 10(j) and (l) of the National Labor Relations Act, 29 U.S.C. 169 (j), (l); current and former Agency employees assigned to cases.

CATEGORIES OF RECORDS IN THE SYSTEM:

(1) Summary information of unfair labor practice cases (such as names of parties, case status, and Agency personnel assignments) is maintained in an electronic case tracking system, RAILS. (2) Associated Headquarters Files are paper records established and maintained for processing Regional Advice and Injunction Litigation Branch cases. The paper records are administrative and court records (such as unfair labor practice charges, unfair labor practice complaints and answers, transcripts, exhibits, briefs, motions, Board decisions, court opinions and orders made in the adjudication of cases, and case-docketing information), correspondence, legal research memoranda, and other related documents. Both RAILS and the Associated Headquarters Files may include parties' home addresses and home telephone numbers, if such information is provided to the Agency. These records include civil investigatory and law enforcement information.

AUTHORITY FOR MAINTENANCE OF THE SYSTEM:

29 U.S.C. 153(d), 160(j) and (l), 161; 44 U.S.C. 3101.

PURPOSE:

RAILS is an electronic case tracking system used by the Regional Advice and Injunction Litigation Branches to facilitate the accurate and timely collection, retrieval, and retention of information regarding unfair labor practice cases referred to the Branch, including cases involving temporary injunctive relief under Section 10(j) and (l) of the National Labor Relations Act,

29 U.S.C. 160(j) and (l). The information and activities tracked by the system may be generated by the parties' filing of unfair labor practice charges, briefs, motions, and other documents, or by deliberative, analytical processes undertaken by Agency employees. This database stores current and historical information, and is used to generate data for managing the Agency's case processing and resources, creating the Agency's budget, preparing monthly and annual reports of casehandling activities, and providing requested statistical reports to the public. The Associated Headquarters Files are paper files maintained to litigate or otherwise resolve matters handled by the Branches. RAILS and the Associated Headquarters Files may also be used to assist in evaluating Agency employee performance.

ROUTINE USES OF RECORDS MAINTAINED IN THE SYSTEM, INCLUDING CATEGORIES OF USERS AND THE PURPOSE OF SUCH USES:

The standard routine uses applying to this system are listed in the General Prefatory Statement to this document.

DISCLOSURE TO CONSUMER REPORTING AGENCIES:

None.

POLICIES AND PRACTICES FOR STORING, RETRIEVING, ACCESSING, RETAINING, AND DISPOSING OF RECORDS IN THE SYSTEM:

STORAGE:

Data is maintained on paper and electronic media.

RETRIEVABILITY:

Data may be retrieved by names of individual Charged Parties and individual Respondents in unfair labor practice cases referred to the Regional Advice Branch; names of individual Charged Parties and individual Respondents in unfair labor practice cases involving temporary injunctive relief under Section 10(j) and (l) of the National Labor Relations Act referred to the Injunction Litigation Branch; names of current and former Agency employees assigned to cases; and by non-personal identifiers, such as case numbers assigned by the Agency.

SAFEGUARDS:

Access to Agency working and storage areas is restricted to Agency employees who have a need to use the information in order to perform their duties, custodial personnel, Federal Protective Service personnel, and other contractor and security personnel. All other persons are required to be escorted in Agency areas. Associated Headquarters Files are maintained in staffed or locked areas during working hours. The facilities are protected from unauthorized access during non-working hours by the Federal Protective Service or other security personnel. Those Agency Headquarters employees who telecommute and may possess Associated Headquarters Files (or copies of such files) at alternative worksites or who may access RAILS from alternative worksites are instructed as to keeping such information in a secure manner.

Electronic system-based access controls are in place to prevent data misuse. Access to electronic information is controlled by administrators who determine users' authorized access based on each user's office and position within the office. Access criteria, procedures, controls, and responsibilities are documented and consistent with the policies stated in a memorandum titled ''NLRB Access Control Standards, Password Management,'' and dated January 23, 2002. All network users are also warned at the time of each network login that the system is for use by authorized users only, and that unauthorized or improper use is a violation of law.

RETENTION AND DISPOSAL:

RAILS information will be retained and disposed of in accordance with appropriate Agency schedules that will be submitted to the National Archives and Records Administration (NARA) for its approval. Associated Headquarters Files are disposed of in accordance with the Agency's Disposition Standards Records, as approved by NARA.

SYSTEM MANAGER AND ADDRESS:

Associate General Counsel, Division of Advice, National Labor Relations Board, Room 10400, 1099 14th Street, NW., Washington, DC 20570–0001.

NOTIFICATION PROCEDURE:

This system is exempt from this provision of the Privacy Act pursuant to 5 U.S.C. 552a(k)(2).

RECORD ACCESS PROCEDURE:

This system is exempt from this provision of the Privacy Act pursuant to 5 U.S.C. 552a(k)(2).

CONTESTING RECORD PROCEDURE:

This system is exempt from this provision of the Privacy Act pursuant to 5 U.S.C. 552a(k)(2).

RECORDS SOURCE CATEGORIES:

This system is exempt from this provision of the Privacy Act pursuant to 5 U.S.C. 552a(k)(2).

EXEMPTIONS CLAIMED FOR THE SYSTEM:

Pursuant to 5 U.S.C. 552a(k)(2), the Agency has exempted this system from the following provisions of the Privacy Act: 5 U.S.C. 552a(c)(3), (d), (e)(1), (e)(4)(G), (e)(4)(H), (e)(4)(I), and (f).

NLRB–29

SYSTEM NAME:

Work in Progress (WIP) and Associated Headquarters Files.

SECURITY CLASSIFICATION:

None.

SYSTEM LOCATION:

Records are stored on paper and electronic media at Agency Headquarters, Division of Advice, Office of Legal Research and Policy Planning, 1099 14th Street, NW., Washington, DC 20570. Additionally, pursuant to the Agency's flexiplace and telecommuting programs, or due to official travel, Associated Headquarters Files (or copies of such files) also may be temporarily located at alternative worksites. All appropriate safeguards will be taken at these sites.

CATEGORIES OF INDIVIDUALS COVERED BY THE SYSTEM:

Individual parties in cases decided by the Board and related court cases; current and former Agency employees assigned to cases.

CATEGORIES OF RECORDS IN THE SYSTEM:

(1) Summary information of the Agency's internal legal research database of Board and related court decisions, including summaries and classifications of those decisions, names of parties in decisions, work completion status, and Agency personnel assignments, is maintained in an electronic case tracking system, WIP. (2) Associated Headquarters Files are paper records established and maintained to create summaries and classifications of Board and related court decisions. The paper records include the names of current and former Agency employees assigned to create the summaries and classifications, as well as Board and federal court decisions.

AUTHORITY FOR MAINTENANCE OF THE SYSTEM:

29 U.S.C. 153(d), 160; 44 U.S.C. 3101.

PURPOSE:

WIP is an electronic case tracking system used by the Legal Research and Policy Planning Branch to collect, classify and summarize decisions issued by the Board and courts, as well as to store, maintain and retrieve the classifications and summaries. The information and activities tracked by the system may be generated by the issuance of Board and court decisions, or by the commencement or completion of work by Agency employees. This

database stores current and historical information, and is used to generate data for case assignment. The classifications and summaries are also published in the Classified Index of National Labor Relations Board Decisions and Related Court Decisions, as well as on a public electronic research database called CITENET. The Associated Headquarters Files are paper files maintained to aid in preparing the classifications and summaries. WIP and the Associated Headquarters Files may also be used to assist in evaluating Agency employee performance.

ROUTINE USES OF RECORDS MAINTAINED IN THE SYSTEM, INCLUDING CATEGORIES OF USERS AND THE PURPOSE OF SUCH USES:

The standard routine uses applying to this system are those listed in the General Prefatory Statement to this document, items numbered 7–10 and 12–15 only.

DISCLOSURE TO CONSUMER REPORTING AGENCIES:

None.

POLICIES AND PRACTICES FOR STORING, RETRIEVING, ACCESSING, RETAINING, AND DISPOSING OF RECORDS IN THE SYSTEM:

STORAGE:

Data is maintained on paper and electronic media.

RETRIEVABILITY:

Data may be retrieved by names of individual parties in cases decided by the Board and related court cases; current and former Agency employees assigned to cases; as well as by non-personal identifiers, such as Agency case numbers.

SAFEGUARDS:

Access to Agency working and storage areas is restricted to Agency employees who have a need to use the information in order to perform their duties, custodial personnel, Federal Protective Service personnel, and other contractor and security personnel. All other persons are required to be escorted in Agency areas. Associated Headquarters Files are maintained in staffed or locked areas during working hours. The facilities are protected from unauthorized access during non-working hours by the Federal Protective Service or other security personnel. Those Agency Headquarters employees who telecommute and may possess Associated Headquarters Files (or copies of such files) at alternative worksites are instructed as to keeping such information in a secure manner.

Electronic system-based access controls are in place to prevent data misuse. Access to electronic information is controlled by administrators who determine users' authorized access based on each user's office and position within the office. Access criteria, procedures, controls, and responsibilities are documented and consistent with the policies stated in a memorandum titled ''NLRB Access Control Standards, Password Management,'' and dated January 23, 2002. All network users are also warned at the time of each network login that the system is for use by authorized users only, and that unauthorized or improper use is a violation of law.

RETENTION AND DISPOSAL:

WIP information will be retained and disposed of in accordance with appropriate Agency schedules that will be submitted to the National Archives and Records Administration (NARA) for its approval. Associated Headquarters Files are disposed of in accordance with the Agency's Disposition Standards Records, as approved by NARA.

SYSTEM MANAGER AND ADDRESS:

Assistant General Counsel, Legal Research and Policy Planning Branch, Division of Advice, National Labor Relations Board, Room 10600, 1099 14th Street, NW., Washington, DC 20570–0001.

NOTIFICATION PROCEDURE:

An individual may inquire as to whether this system contains a record pertaining to such individual by directing a request to the System Manager in accordance with the procedures set forth in 29 CFR 102.117a(a) (as newly designated in accompanying proposed amended regulations).

RECORD ACCESS PROCEDURE:

An individual seeking to gain access to records in this system pertaining to such individual should contact the System Manager in accordance with the procedures set forth in 29 CFR 102.117a(b) and (c) (as newly designated in accompanying proposed amended regulations).

CONTESTING RECORD PROCEDURE:

An individual may request amendment of a record in this system pertaining to such individual by directing a request to the System Manager in accordance with the procedures set forth in 29 CFR 102.117a(d) (as newly designated in accompanying proposed amended regulations).

RECORDS SOURCE CATEGORIES:

Record source categories include Board and federal court decisions, and current and former Agency employees of the Legal Research and Policy Planning Branch.

EXEMPTIONS CLAIMED FOR THE SYSTEM:

None.

NLRB–30

SYSTEM NAME:

Appeals Case Tracking System (ACTS) and Associated Headquarters Files.

SECURITY CLASSIFICATION:

None.

SYSTEM LOCATION:

Records are stored on paper and electronic media at Agency Headquarters, Office of Appeals, Division of Enforcement Litigation, 1099 14th Street, NW., Washington, DC 20570. Additionally, pursuant to the Agency's flexiplace and telecommuting programs, or due to official travel, ACTS may also be accessed from alternative worksites via the Internet, including employees' homes. Associated Headquarters Files (or copies of such files) also may be temporarily located at alternative worksites. All appropriate safeguards will be taken at these sites.

CATEGORIES OF INDIVIDUALS COVERED BY THE SYSTEM:

Individual parties in unfair labor practice cases in which appeals of Regional Directors' dismissals of charges or limited other decisions have been filed with the Office of Appeals; current and former Agency employees assigned to cases.

CATEGORIES OF RECORDS IN THE SYSTEM:

(1) Summary information of appeals in unfair labor practice cases in which appeals of Regional Directors' dismissals of charges or limited other decisions have been filed with the Office of Appeals (such as names of parties, case status, and Agency personnel assignments) is maintained in an electronic case tracking system, ACTS. (2) Associated Headquarters Files are paper records used for processing appeals of Regional Directors' dismissals of unfair labor practice charges and limited other decisions by Regional Directors. The paper records are administrative records (such as unfair labor practice charges, party position statements, Regional Directors' determinations), correspondence, legal research memoranda, and other related documents. These records include the names of parties and current and former Agency employees assigned to cases. Both ACTS and the Associated Headquarters Files may include parties'

home addresses and home telephone numbers, if such information is provided to the Agency. These records include civil investigatory and law enforcement information.

AUTHORITY FOR MAINTENANCE OF THE SYSTEM:

29 U.S.C. 153(d); 44 U.S.C. 3101.

PURPOSE:

ACTS is an electronic case tracking system used by the Office of Appeals to facilitate the accurate and timely collection, retrieval, and retention of information regarding appeals of decisions of Regional Directors, including decisions dismissing unfair labor practice charges, deferring proceedings to parties' contractual grievance-arbitration processes, or closing unfair labor practice cases upon compliance action. The information and activities tracked by the system may be generated by the parties' filing of appeals and position statements, or by deliberative, analytical processes undertaken by Agency employees. This database stores current and historical information, and is used to generate data for managing the Agency's case processing and resources, creating the Agency's budget, preparing monthly and annual reports of casehandling activities, and providing requested statistical reports to the public. The Associated Headquarters Files are paper files maintained to resolve matters handled by the Office of Appeals. ACTS and the Associated Headquarters Files may also be used to assist in evaluating Agency employee performance.

ROUTINE USES OF RECORDS MAINTAINED IN THE SYSTEM, INCLUDING CATEGORIES OF USERS AND THE PURPOSE OF SUCH USES:

The standard routine uses applying to this system are listed in the General Prefatory Statement to this document.

DISCLOSURE TO CONSUMER REPORTING AGENCIES:

None.

POLICIES AND PRACTICES FOR STORING, RETRIEVING, ACCESSING, RETAINING, AND DISPOSING OF RECORDS IN THE SYSTEM:

STORAGE:

Data is maintained on paper and electronic media.

RETRIEVABILITY:

Data may be retrieved by names of individual parties in unfair labor practice cases in which appeals of Regional Directors' dismissals of charges or limited other decisions have been filed with the Office of Appeals; names of current and former Agency employees assigned to cases; as well as by non-personal identifiers, such as case numbers assigned by the Agency.

SAFEGUARDS:

Access to Agency working and storage areas is restricted to Agency employees who have a need to use the information in order to perform their duties, custodial personnel, Federal Protective Service personnel, and other contractor and security personnel. All other persons are required to be escorted in Agency areas. Associated Headquarters Files are maintained in staffed or locked areas during working hours. The facilities are protected from unauthorized access during non-working hours by the Federal Protective Service or other security personnel. Those Agency Headquarters employees who telecommute and may possess Associated Headquarters Files (or copies of such files) at alternative worksites or who may access ACTS from alternative worksites are instructed as to keeping such information in a secure manner.

Electronic system-based access controls are in place to prevent data misuse. Access to electronic information is controlled by administrators who determine users' authorized access based on each user's office and position within the office. Access criteria, procedures, controls, and responsibilities are documented and consistent with the policies stated in a memorandum titled ''NLRB Access Control Standards, Password Management,'' and dated January 23, 2002. All network users are also warned at the time of each network login that the system is for use by authorized users only, and that unauthorized or improper use is a violation of law.

RETENTION AND DISPOSAL:

ACTS information will be retained and disposed of in accordance with appropriate Agency schedules that will be submitted to the National Archives and Records Administration (NARA) for its approval. Associated Headquarters Files are disposed of in accordance with the Agency's Disposition Standards Records, as approved by NARA.

SYSTEM MANAGER AND ADDRESS:

Director, Office of Appeals, National Labor Relations Board, Room 8820, 1099 14th Street, NW., Washington, DC 20570–0001.

NOTIFICATION PROCEDURE:

This system is exempt from this provision of the Privacy Act pursuant to 5 U.S.C. 552a(k)(2).

RECORD ACCESS PROCEDURE:

This system is exempt from this provision of the Privacy Act pursuant to 5 U.S.C. 552a(k)(2).

CONTESTING RECORD PROCEDURE:

This system is exempt from this provision of the Privacy Act pursuant to 5 U.S.C. 552a(k)(2).

RECORDS SOURCE CATEGORIES:

This system is exempt from this provision of the Privacy Act pursuant to 5 U.S.C. 552a(k)(2).

EXEMPTIONS CLAIMED FOR THE SYSTEM:

Pursuant to 5 U.S.C. 552a(k)(2), the Agency has exempted this system from the following provisions of the Privacy Act: 5 U.S.C. 552a (c)(3), (d), (e)(1), (e)(4)(G), (e)(4)(H), (e)(4)(I), and (f).

NLRB–31

SYSTEM NAME:

Office of Appeals Extension of Time System (EOTS).

SECURITY CLASSIFICATION:

None.

SYSTEM LOCATION:

Records are stored on electronic media at Agency Headquarters, Office of Appeals, Division of Enforcement Litigation, 1099 14th Street, NW., Washington, DC 20570–0001.

CATEGORIES OF INDIVIDUALS COVERED BY THE SYSTEM:

Individual Charged Parties in unfair labor practice proceedings in which charging parties have electronically requested extensions of time from the Office of Appeals to file appeals of dismissals of charges or limited other decisions of Regional Directors.

CATEGORIES OF RECORDS IN THE SYSTEM:

Summary information of cases in which Charging Parties in unfair labor practice proceedings who have electronically requested extensions of time to file appeals of dismissals of charges or limited other decisions of Regional Directors (such as names of parties, case status, and Agency personnel assignments) is maintained in an electronic case tracking system, EOTS. The system includes information relevant to extension of time requests such as the current due date for the appeal, the requested due date, the reasons for the requested extension of time, and whether the request has been granted or denied. EOTS may include individual parties' home addresses and home telephone numbers, if such information is provided to the Agency. Any paper records associated with EOTS are placed within the Associated Headquarters Files for ACTS (NLRB–30).

AUTHORITY FOR MAINTENANCE OF THE SYSTEM:

29 U.S.C. 153(d); 44 U.S.C. 3101.

PURPOSE:

EOTS is an electronic case tracking system used by the Office of Appeals to enable parties in an unfair labor practice proceeding to request extensions of time to appeal decisions of Regional Directors dismissing unfair labor practice charges, deferring proceedings to parties' contractual grievance-arbitration processes, or closing unfair labor practice cases upon compliance action. The system is also used to notify Regional Offices that requests for extensions of time have been received. The information and activities tracked by the system may be generated by the parties' requests for extensions of time, or by the Office of Appeals' responses to those requests. This database stores current and historical information, and is used to generate data for managing the Agency's case processing and resources, creating the Agency's budget, preparing monthly and annual reports of casehandling activities, and providing requested statistical reports to the public.

ROUTINE USES OF RECORDS MAINTAINED IN THE SYSTEM, INCLUDING CATEGORIES OF USERS AND THE PURPOSE OF SUCH USES:

The standard routine uses applying to this system are those listed in the General Prefatory Statement to this document, items numbered 4, 7–10, and 12–15 only.

DISCLOSURE TO CONSUMER REPORTING AGENCIES:

None.

POLICIES AND PRACTICES FOR STORING, RETRIEVING, ACCESSING, RETAINING, AND DISPOSING OF RECORDS IN THE SYSTEM:

STORAGE:

Data is maintained on electronic media.

RETRIEVABILITY:

Data may be retrieved by names of individual Charged Parties in unfair labor practice proceedings in which charging parties have electronically requested extensions of time to file appeals of dismissals of charges or limited other decisions of Regional Directors; and non-personal identifiers, such as case numbers assigned by the Agency.

SAFEGUARDS:

Access to Agency working and storage areas is restricted to Agency employees who have a need to use the information in order to perform their duties, custodial personnel, Federal Protective Service personnel, and other contractor and security personnel. All other persons are required to be escorted in Agency areas. The facilities are protected from unauthorized access during non-working hours by the Federal Protective Service or other security personnel. Those Agency Headquarters employees who telecommute and may access EOTS from alternative worksites are instructed as to keeping such information in a secure manner.

Electronic system-based access controls are in place to prevent data misuse. Access to electronic information is controlled by administrators who determine users' authorized access based on each user's office and position within the office. Access criteria, procedures, controls, and responsibilities are documented and consistent with the policies stated in a memorandum titled ''NLRB Access Control Standards, Password Management,'' and dated January 23, 2002. All network users are also warned at the time of each network login that the system is for use by authorized users only, and that unauthorized or improper use is a violation of law.

RETENTION AND DISPOSAL:

EOTS information will be retained and disposed of in accordance with appropriate Agency schedules that will be submitted to the National Archives and Records Administration (NARA) for its approval.

SYSTEM MANAGER AND ADDRESS:

Director, Office of Appeals, National Labor Relations Board, Room 8820, 1099 14th Street, NW., Washington, DC 20570–0001.

NOTIFICATION PROCEDURE:

An individual may inquire as to whether this system contains a record pertaining to such individual by directing a request to the System Manager in accordance with the procedures set forth in 29 CFR 102.117a(a) (as newly designated in accompanying proposed amended regulations).

RECORD ACCESS PROCEDURE:

An individual seeking to gain access to records in this system pertaining to such individual should contact the System Manager in accordance with the procedures set forth in 29 CFR 102.117a(b) and (c) (as newly designated in accompanying proposed amended regulations).

CONTESTING RECORD PROCEDURE:

An individual may request amendment of a record in this system pertaining to such individual by directing a request to the System Manager in accordance with the procedures set forth in 29 CFR 102.117a(d) (as newly designated in accompanying proposed amended regulations).

RECORDS SOURCE CATEGORIES:

Record source categories include charging parties in unfair labor practice cases; party representatives; and also include official documents from the record of unfair labor practice cases, such as unfair labor practice charges and Regional Directors' dismissals.

EXEMPTIONS CLAIMED FOR THE SYSTEM:

None.

NLRB–32

SYSTEM NAME:

Freedom of Information Act Tracking System (FTS) and Associated Agency Files.

SECURITY CLASSIFICATION:

None.

SYSTEM LOCATION:

Records are stored on paper and electronic media at Agency Headquarters and the Regional Offices. *See* attached Appendix for addresses. Additionally, pursuant to the Agency's flexiplace and telecommuting programs, or due to official travel, FTS may also be accessed from alternative worksites via the Internet, including employees' homes. Associated Agency Files (or copies of such files) also may be temporarily located at alternative worksites. All appropriate safeguards will be taken at these sites.

CATEGORIES OF INDIVIDUALS COVERED BY THE SYSTEM:

Individuals making FOIA requests for documents maintained by the Agency and those requesters appealing initial agency FOIA determinations (''FOIA appellants''); individual parties in Agency and related judicial proceedings named in FOIA requests; current and former Agency employees assigned to process FOIA requests and appeals.

CATEGORIES OF RECORDS IN THE SYSTEM:

(1) Summary information of FOIA requests and appeals made to the Agency (such as requester contact information, assumption of fees information, request information, appeal information, and Agency personnel assigned to process FOIA requests) is maintained in an electronic case tracking system, FTS. (2) Associated Agency Files are paper records concerning the processing of initial FOIA requests to the Agency and appeals of those initial determinations. The paper records are administrative records (such as FOIA requests, initial Agency determinations, documents

responsive to the FOIA requests, documents withheld from FOIA requesters, final Agency determinations on appeal, and bills to the requesters for chargeable fees), correspondence, legal research memoranda, and other related documents. Both FTS and the Associated Agency Files may include FOIA requesters' and FOIA appellants' home addresses and home telephone numbers, if such information is provided to the Agency. Portions of these records include civil investigatory and law enforcement information contained in the requested documents at issue.

AUTHORITY FOR MAINTENANCE OF THE SYSTEM:

5 U.S.C. 552; 44 U.S.C. 3101.

PURPOSE:

FTS is an electronic case tracking system used by the Legal Research Section, the Regional Offices, the Office of Appeals, the Office of the Executive Secretary, and the Office of the Solicitor to facilitate the accurate and timely collection, retrieval, and retention of information to track FOIA requests from the public for documents maintained by the Agency, as well as appeals of Agency FOIA determinations. The information and activities tracked by the system may be generated by the parties' filing of FOIA requests, the issuance of initial FOIA determinations, the parties' filing of FOIA appeals, and the Agency's final determinations. FTS is used to track the processing of FOIA requests from initial receipt of requests through Agency determination on appeal, the nature of records sought, exemptions claimed by the Agency in initial determinations, processing time, and any fee charges. This database stores current and historical information, and is used to generate data for managing the Agency's resources, creating the Agency's budget, preparing monthly and annual reports of casehandling activities, and providing requested statistical reports to the public. The Associated Agency Files are paper files maintained to document FOIA requests and FOIA appeals handled by the Agency. FTS and the Associated Agency Files may also be used to assist in evaluating Agency employee performance.

ROUTINE USES OF RECORDS MAINTAINED IN THE SYSTEM, INCLUDING CATEGORIES OF USERS AND THE PURPOSE OF SUCH USES:

The standard routine uses applying to this system are listed in the General Prefatory Statement to this document.

DISCLOSURE TO CONSUMER REPORTING AGENCIES:

None.

POLICIES AND PRACTICES FOR STORING, RETRIEVING, ACCESSING, RETAINING, AND DISPOSING OF RECORDS IN THE SYSTEM:

STORAGE:

Data is maintained on paper and electronic media.

RETRIEVABILITY:

Data may be retrieved by individual names of those making FOIA requests and FOIA appeals to the Agency; names of parties in Agency or related judicial proceedings named in FOIA requests, names of current and former Agency employees assigned to cases; as well as by non-personal identifiers, such as case numbers assigned by the Agency.

SAFEGUARDS:

Access to Agency working and storage areas is restricted to Agency employees who have a need to use the information in order to perform their duties, custodial personnel, Federal Protective Service personnel, and other contractor and security personnel. All other persons are required to be escorted in Agency areas. Associated Headquarters Files are maintained in staffed or locked areas during working hours. The facilities are protected from unauthorized access during non-working hours by the Federal Protective Service or other security personnel. Those Agency Headquarters employees who telecommute and may possess Associated Headquarters Files (or copies of such files) at alternative worksites or who may access FTS from alternative worksites are instructed as to keeping such information in a secure manner.

Electronic system-based access controls are in place to prevent data misuse. Access to electronic information is controlled by administrators who determine users' authorized access based on each user's office and position within the office. Access criteria, procedures, controls, and responsibilities are documented and consistent with the policies stated in a memorandum titled ''NLRB Access Control Standards, Password Management,'' and dated January 23, 2002. All network users are also warned at the time of each network login that the system is for use by authorized users only, and that unauthorized or improper use is a violation of law.

RETENTION AND DISPOSAL:

FTS information will be retained and disposed of in accordance with appropriate Agency schedules that will be submitted to the National Archives and Records Administration (NARA) for its approval. Associated Agency Files are disposed of in accordance with the Agency's Disposition Standards Records, as approved by NARA.

SYSTEM MANAGER AND ADDRESS:

Assistant General Counsel/Freedom of Information Officer, Legal Research and Policy Planning Branch, Division of Advice, National Labor Relations Board, Room 10600, 1099 14th Street, NW., Washington, DC 20570–0001.

NOTIFICATION PROCEDURES:

For records not exempted under 5 U.S.C. 552a(k)(2) of the Privacy Act, an individual may inquire as to whether this system contains a record pertaining to such individual by directing a request to the System Manager in accordance with the procedures set forth in 29 CFR § 102.117a(a) (as newly designated in accompanying proposed amended regulations).

RECORD ACCESS PROCEDURE:

For records not exempted under 5 U.S.C. 552a(k)(2) of the Privacy Act, an individual seeking to gain access to records in this system pertaining to such individual should contact the System Manager in accordance with the procedures set forth in 29 CFR § 102.117a(b) and (c) (as newly designated in accompanying proposed amended regulations).

CONTESTING RECORD PROCEDURE:

For records not exempted under 5 U.S.C. 552a(k)(2) of the Privacy Act, an individual may request amendment of a record in this system pertaining to such individual by directing a request to the System Manager in accordance with the procedures set forth in 29 CFR § 102.117a(d) (as newly designated in accompanying proposed amended regulations).

RECORDS SOURCE CATEGORIES:

For records not exempted under 5 U.S.C. 552a(k)(2) of the Privacy Act, record source categories include Agency employees processing FOIA requests, FOIA requesters and appellants, and documents relating to the processing of a FOIA request.

EXEMPTIONS CLAIMED FOR THE SYSTEM:

Pursuant to 5 U.S.C. 552a(k)(2), the Agency has exempted portions of this system, including investigatory material compiled for law enforcement purposes and requested under the FOIA, from the following provisions of the Privacy Act: 5 U.S.C. 552a (c)(3), (d), (e)(1), (e)(4)(G), (e)(4)(H), (e)(4)(l), and (f).

Dated: Washington, DC.

By direction of the Board.

Lester A. Heltzer,

Executive Secretary

Names and Addresses of NLRB Offices Referenced in Notice of Records Systems Shown Above

NLRB Headquarters Offices, 1099 14th Street, NW, Washington, DC 20570–0001

Offices of the Board

Members of the Board

NLRB
Executive Secretary
Office of the Executive Secretary, Director
Office of Representation Appeals, Director
Division of Information
Solicitor
Inspector General
Office of Inspector General
Division of Judges, Chief Administrative Law Judge, 1099 14th Street, NW, Room 5400 East, Washington, DC 20570–0001
Associate Chief Administrative Law Judge, San Francisco Judges, 901 Market Street, Suite 300, San Francisco, California 94103–1779
Associate Chief Administrative Law Judge, New York Judges, 120 West 45th Street, 11th Floor, New York, New York 10036–5503
Associate Chief Administrative Law Judge, Atlanta Judges, Peachtree Summit Building, 401 W. Peachtree Street, NE, Suite 1708, Atlanta, Georgia 30308–3510

Offices of the General Counsel

General Counsel
Associate General Counsel
Division of Operations Management
Associate General Counsel
Division of Advice
Associate General Counsel
Division of Enforcement Litigation, Director
Division of Administration, Director
Equal Employment Opportunity

NLRB Field Offices

Regional Director, Region 1, 10 Causeway Street, Room 601, Boston, Massachusetts 02222–1072
Regional Director, Region 2, 26 Federal Plaza, Room 3614, New York, New York 10278–0104
Regional Director, Region 3, Niagara Center Building, 130 South Elmwood Avenue, 6th Floor, Buffalo, New York 14202–2465
Resident Officer, Leo W. O'Brien Federal Building, Clinton Avenue and N. Pearl Street, Room 342, Albany, New York 12207–2350
Regional Director, Region 4, 615 Chestnut Street, 7th Floor, Philadelphia, Pennsylvania 19106–4404
Regional Director, Region 5, The Appraisers Store Building, 103 South Gay Street, 8th Floor, Baltimore, Maryland 21202–4061?????
Resident Officer, Washington Resident Office, 1099 14th Street, NW—Suite 5530, Washington, DC 20570–0001
Regional Director, Region 6, Two Chatham Center, 112 Washington Place, Suite 510, Pittsburgh Pennsylvania 15219–3458
Regional Director, Region 7, 477 Michigan Avenue—Room 300, Detroit, Michigan 48226–2569
Resident Officer, Grand Rapids Resident Office, 82 Ionia NW—Room 330, Grand Rapids, Michigan 49503–3022
Regional Director, Region 8, 1240 East 9th Street—Room 1695, Cleveland, Ohio 44199–2086
Regional Director, Region 9, John Weld Peck Federal Building, 550 Main Street—Room 3003, Cincinnati, Ohio 45202–3271
Regional Director, Region 10, 233 Peachtree Street NE, Harris Tower, Suite 1000, Atlanta, Georgia 30303–1531
Resident Officer, Ridge Park Place, Suite 3400, 1130 South 22nd Street, Birmingham, Alabama 35205–2870
Regional Director, Region 11, Republic Square, Suite 200, 4035 University Parkway, Winston Salem, North Carolina 27106–3323 or P.O. Box 11467, Winston-Salem, North Carolina 27116–1467
Regional Director, Region 12, 201 East Kennedy Boulevard, Suite 530, Tampa, Florida 33602–5824
Resident Officer, 550 Water Street, Suite 340, Jacksonville, Florida 32202–5177
Resident Officer, Federal Building, Room 1320, 511 SW 1st Avenue, Miami, Florida 33130–1623
Regional Director, Region 13, The Rookery Building, 209 South LaSalle Street, Suite 900, Chicago, Illinois 60604–1219
Regional Director, Region 14, 1222 Spruce Street, Room 8.302, Saint Louis, Missouri 63103–2829
Officer in Charge, Subregion 33, Hamilton Square Building, Suite 200, 300 Hamilton Boulevard, Peoria, Illinois 61602–1246
Regional Director, Region 15, 1515 Poydras Street, Room 610, New Orleans, Louisiana 70112–3723
Regional Director, Region 16, 819 Taylor Street, Room 8A24, Fort Worth, Texas 76102–6178
Resident Officer, Mickey Leland Federal Building, 1919 Smith Street, Suite 1545, Houston, Texas 77002
Resident Officer, San Antonio Resident Office, Travis Park Plaza building, 711 Navarro Street, Suite 705, San Antonio, Texas 78205–1711
Regional Director, Region 17, 8600 Farley Street, Suite 100, Overland Park, Kansas 66212–4677
Resident Officer, 224 South Boulder Avenue, Room 318, Tulsa, Oklahoma 74103–3027
Regional Director, Region 18, 330 South Second Avenue, Suite 790, Minneapolis, Minnesota 55401–2221
Resident Officer, 210 Walnut Street, Room 439, Des Moines, Iowa 50309–2103
Regional Director, Region 19, 915 Second Avenue, Room 2948, Seattle, Washington 98174–1078
Resident Officer, Elevation 92 Building, 1007 West 3rd Avenue, Suite 206, Anchorage, Alaska 99501–1936
Officer in Charge—Subregion 36, 601 SW 2nd Avenue, Suite 1910, Portland, Oregon 97204–3170
Regional Director, Region 20, 901 Market Street, Suite 400, San Francisco, California 94103–1735
Officer in Charge—Subregion 37, 300 Ala Moana Boulevard, Room 7–245, Honolulu, Hawaii 96850–4980
Regional Director, Region 21, 888 South Figueroa Street, 9th Floor, Los Angeles, California 90017–5449
Resident Officer, 555 West Beech Street, Room 418, San Diego, California 92101–2939
Regional Director, Region 22, 20 Washington Place, 5th Floor, Newark, New Jersey 07102–3110
Regional Director, Region 24, Hato Rey, PR, La Torre de Plaza, Suite 1002, 525 F.D. Roosevelt Avenue, San Juan, Puerto Rico 00918–1002
Regional Director, Region 25, 575 North Pennsylvania Street—Room 238, Indianapolis, Indiana 46204–1577
Region Director, Region 26, The Brinkley Plaza Building, Suite 350, 80 Monroe Avenue, Memphis, Tennessee 38103–2416
Resident Officer, Metropolitan National Bank Building, 425 West Capitol Avenue, Suite 1615, Little Rock, Arkansas 72201–3489
Resident Officer, Nashville Resident Office, 810 Broadway, Suite 320, Nashville, Tennessee 37203–3859
Regional Director, Region 27, 600 17th Street, 7th Floor, North Tower, Denver, Colorado 80202–5433
Regional Director, Region 28, 2600 North Central Avenue, Suite 1800, Phoenix, Arizona 85004–3099
Resident Officer, 505 Marquette Avenue, NW, Suite 1820, Albuquerque, New Mexico 87102–2181
Resident Officer, 600 Las Vegas Boulevard South, Suite 400, Las Vegas, Nevada 89101–6637
Regional Director, Region 29, Two Metro Tech Center, 100 Myrtle

Avenue—5th Floor, Brooklyn, New York 11201–4201
Regional Director, Region 30, 310 West Wisconsin Avenue, Suite 700, Milwaukee, Wisconsin 53203–2211
Regional Director, Region 31, 11150 West Olympic Boulevard, Suite 700, Los Angeles, California 90064–1824
Regional Director, Region 32, Ronald V. Dellums Federal Building and Courthouse, 1301 Clay Street, Suite 300N, Oakland, California 94612–5211
Regional Director, Region 34, 280 Trumbull Street, 21st Floor, Hartford, Connecticut 06103–3503

[FR Doc. 06–9683 Filed 12–12–06; 8:45 am]
BILLING CODE 7545–01–P

NUCLEAR REGULATORY COMMISSION

[Docket No. 50–263]

Nuclear Management Company, LLC; Monticello Nuclear Generating Plant; Exemption

1.0 Background

Nuclear Management Company, LLC (the licensee), is the holder of Facility Operating License No. DPR–22 which authorizes operation of Monticello Nuclear Generating Plant (MNGP). The license provides, among other things, that the facility is subject to all rules, regulations, and orders of the U.S. Nuclear Regulatory Commission (NRC, the Commission) now or hereafter in effect.

The facility consists of a boiling-water reactor located in Wright County in Minnesota.

2.0 Request/Action

Appendix J to Title 10 of the Code of Federal Regulations (10 CFR) specifies the leakage rate test requirements, schedules, and acceptance criteria for tests of the leak-tight integrity of the primary reactor containment and systems and components that penetrate the containment. Option B, Paragraph III.A, of Appendix J requires that the overall integrated leakage rate must not exceed the allowable leakage (La) with margin, as specified in the plant's Technical Specifications. The overall integrated leakage rate, as specified in Appendix J, includes the contribution from main steam pathway leakage (*i.e.*, through the four main steam lines and the main steam drain line at MNGP). Option B, Paragraph III.B requires that the sum of the leakage rates of Type B and Type C local leakage rate tests be less than the performance criterion (La) with margin, as specified in the Technical Specifications.

By letter dated September 15, 2005, the licensee requested exemption from Option B, Section III.A, requirements to exclude main steam isolation valve (MSIV) leakage from the overall integrated leak rate test measurement, and exemption from Section III.B requirements to exclude the MSIV leakage from the sum of the Type B and Type C tests. The licensee stated that the MNGP MSIV leakage effluent has a different pathway to the environment when compared to a typical containment penetration, *i.e.*, it is not directed into the secondary containment and filtered through the standby gas treatment system. Instead, the main steam leakage is collected and treated via an alternative leakage treatment pathway, having different mitigation characteristics.

In performing accident analyses, it is appropriate to group various leakage effluents according to the treatment they receive before being released to the environment (*e.g.*, from main steam pathways). Accordingly, the licensee's proposed exemption from the Appendix J requirements would more appropriately reflect the MNGP design which employs an alternative leakage treatment pathway. The calculated radiological consequences of the combined leakages were found to be within the criteria of 10 CFR 50.67 and GDC–19. The NRC staff reviewed the licensee's analyses and found them acceptable as described in a safety analysis accompanying an amendment regarding alternative source term methodology to be issued concurrently with this exemption. By separating the MSIV leakage acceptance criteria from the overall integrated leak rate test criteria, and from the Type B and C leakage sum limitation, the MNGP containment leakage testing program will be made more consistent with the limiting assumptions used in the associated accident consequences analyses. The amendment associated with this exemption will revise Technical Specification Surveillance Requirement 3.6.1.3.13 to limit the maximum allowable combined MSIV leakage to 200 standard cubic feet per hour, which is the analytical limit.

Based on the foregoing, the separation of the main steam pathways from the other containment leakage pathways is warranted because a separate radiological consequence term has been provided for these pathways. The revised design basis radiological consequence analyses address these pathways as individual factors, exclusive of the primary containment leakage.

3.0 Discussion

Pursuant to 10 CFR 50.12, the Commission may, upon application by any interested person or upon its own initiative, grant exemptions from the requirements of 10 CFR Part 50 when (1) The exemptions are authorized by law, will not present an undue risk to public health or safety, and are consistent with the common defense and security; and (2) when special circumstances are present. The licensee's exemption request was submitted in conjunction with an amendment application to employ the alternative source term (AST) methodology for design-basis accidents. The NRC staff had completed its review and is issuing the proposed amendment on the same date as this exemption. The exemption and amendment together would implement the AST methodology. The special circumstances associated with MSIV leakage testing are fully described in the licensee's September 15, 2005, application for amendment and exemption.

Authorized by Law

This exemption would exempt Nuclear Management Company from requirements in 10 CFR Part 50, Appendix J, thus (1) Excluding MSIV leakage in the overall integrated leakage rate test measurement required by Section III. A of Appendix J, Option B; and (2) excluding the sum of local leak rate test measurements required by Section III.B of Appendix J, Option B. As stated above, 10 CFR 50.12 allows the NRC to grant exemptions from the requirements of 10 CFR Part 50. The NRC staff has determined that granting of the licensee's proposed exemption will not result in a violation of the Atomic Energy Act of 1954, as amended, or the Commission's regulations. Therefore, the exemption is authorized by law.

No Undue Risk to Public Health and Safety

The proposed exemption affects only the radiological dose analysis models and the way containment leak-tightness is measured. No new accident precursors are created by the exemption; accordingly, the probability of postulated accidents is not increased and the consequences of postulated accidents are not increased. Therefore, there is no undue risk to public health and safety as a result of the exemption.

Consistent With Common Defense and Security

The proposed exemption, as set forth above, would only affect the radiological dose analysis models and the way containment leak-tightness is measured. Thus, this exemption bears no relation to security issues. Therefore, the common defense and security is not impacted by this exemption.

Special Circumstances

Special circumstances, in accordance with 10 CFR 50.12(a)(2)(ii), are present whenever application of the regulation in the particular circumstances ''would not serve the underlying purpose of the rule or is not necessary to achieve the underlying purpose of the rule.'' The underlying purpose of Appendix J is to assure that containment leak-tight integrity is maintained as tight as reasonably achievable, and sufficiently tight so as to limit effluent release to values bounded by the analyses of radiological consequences of design-basis accidents. The NRC staff has determined that the intent of the rule is not compromised by the licensee's proposed action because containment leak rates will continue to be limited by MNGP's Technical Specifications. Therefore, since the underlying purpose of Appendix J is achieved, the special circumstances required by 10 CFR 50.12(a)(2) for the granting of an exemption from Appendix J exist.

4.0 Conclusion

Accordingly, the Commission has determined that, pursuant to 10 CFR 50.12, the exemption is authorized by law, will not present an undue risk to public health and safety, and is consistent with the common defense and security. Also, special circumstances are present. Therefore, the Commission hereby grants MNGP an exemption (1) From the requirements of 10 CFR Part 50, Appendix J, Option B, Paragraph III.A, to allow exclusion of the main steam pathway leakage from the overall integrated leakage rate measured when performing a Type A test; and (2) from the requirements of 10 CFR Part 50, Appendix J, Option B, Paragraph III.B, to allow exclusion of the main steam pathway leakage from the combined leakage rate of all penetrations and valves subject to Type B and C tests.

Pursuant to 10 CFR 51.32, the Commission has determined that the granting of this exemption will not have a significant effect on the quality of the human environment (71 FR 70996).

This exemption is effective upon issuance.

Dated at Rockville, Maryland, this 7th day of December, 2006.

For the Nuclear Regulatory Commission.

Cathy Haney,

Director, Division of Operating Reactor Licensing, Office of Nuclear Reactor Regulation.

[FR Doc. E6–21152 Filed 12–12–06; 8:45 am]

BILLING CODE 7590–01–P

NUCLEAR REGULATORY COMMISSION

Licensing Support System Advisory Review Panel

AGENCY: U. S. Nuclear Regulatory Commission.

ACTION: Notice of renewal of the charter of the Licensing Support Network Advisory Review Panel (LSNARP).

SUMMARY: The Licensing Support System Advisory Review Panel was established by the U.S. Nuclear Regulatory Commission as a Federal Advisory Committee in 1989. Its purpose was to provide advice on the fundamental issues of design and development of an electronic information management system to be used to store and retrieve documents relating to the licensing of a geologic repository for the disposal of high-level radioactive waste, and on the operation and maintenance of the system. This electronic information management system was known as the Licensing Support System (LSS). In November, 1998 the Commission approved amendments to 10 CFR Part 2 that renamed the Licensing Support System Advisory Review Panel as the Licensing Support Network Advisory Review Panel.

Membership on the Panel continues to be drawn from those interests that will be affected by the use of the LSN, including the Department of Energy, the NRC, the State of Nevada, the National Congress of American Indians, affected units of local governments in Nevada, the Nevada Nuclear Waste Task Force, and a coalition of nuclear industry groups. Federal agencies with expertise and experience in electronic information management systems may also participate on the Panel.

The Nuclear Regulatory Commission has determined that renewal of the charter for the LSNARP until December 6, 2008 is in the public interest in connection with duties imposed on the Commission by law. This action is being taken in accordance with the Federal Advisory Committee Act after consultation with the Committee Management Secretariat, General Services Administration.

FOR FURTHER INFORMATION CONTACT: Andrew L. Bates, Office of the Secretary, U.S. Nuclear Regulatory Commission, Washington, DC 20555: Telephone 301–504–1963.

Dated: December 6, 2006.

Andrew L. Bates,

Advisory Committee Management Officer.

[FR Doc. E6–21150 Filed 12–12–06; 8:45 am]

BILLING CODE 7590–01–P

NUCLEAR REGULATORY COMMISSION

Notice of Availability of Interim Staff Guidance Documents for Spent Fuel Storage and Transportation Casks

AGENCY: Nuclear Regulatory Commission.

ACTION: Notice of availability.

FOR FURTHER INFORMATION CONTACT: Robert Einziger, Sr., Materials Engineer, Structural, Mechanics, and Materials Branch, Division of Spent Fuel Storage and Transportation, Office of Nuclear Material Safety and Safeguards, U.S. Nuclear Regulatory Commission, Washington, DC 20005–0001. Telephone: (301) 415–2597; fax number: (301) 415–8555; e-mail: *REE1@nrc.gov*.

SUPPLEMENTARY INFORMATION:

I. Introduction

The Nuclear Regulatory Commission (NRC) prepares draft Interim Staff Guidance (ISG) documents for spent fuel storage or transportation casks or radioactive materials transportation package designs. These ISG documents provide clarifying guidance to the NRC staff when reviewing licensee integrated safety analyses, license applications or amendment requests or other related licensing. The NRC is soliciting public comments on Draft ISG–1 Rev 2, Damaged Fuel'' which will be considered in the final version or subsequent revisions.

II. Summary

The purpose of this notice is to provide the public an opportunity to review and comment on the Draft Interim Staff Guidance–1 Revision 2 concerning the definition of damaged fuel. Draft Interim Staff Guidance–1, Revision 2, provides guidance to NRC staff on what documents should be reviewed and evaluated to ensure that damaged fuel is sufficiently defined to determine if it meets all regulatory functions. Additionally, the ISG provides a technical discussion on gross breaches, a methodology for defining damaged fuel in terms of its function,

and a default definition based on the ANSI 14–33 standard.

III. Further Information

Documents related to this action are available electronically at the NRC's Electronic Reading Room at *http://www.nrc.gov/reading-rm/doc-collections/isg/spent-fuel.html*. From this site, you can access the NRC's Agencywide Documents Access and Management System (ADAMS), which provides text and image files of NRC's public documents. The ADAMS accession numbers for the documents related to this notice are provided in the following table. If you do not have access to ADAMS or if there are problems in accessing the documents located in ADAMS, contact the NRC Public Document Room (PDR) Reference staff at 1–800–397–4209, 301–415–4737, or by e-mail to *pdr@nrc.gov*.

Interim Staff Guidance	ADAMS Accession No.
Interim Staff Guidance–1 Revision 2	ML063410468

These documents may also be viewed electronically on the public computers located at the NRC's PDR, O 1 F21, One White Flint North, 11555 Rockville Pike, Rockville, MD 20852. The PDR reproduction contractor will copy documents for a fee. Comments and questions on the draft SFPO ISG–1 Rev 2 should be directed to the NRC contact listed below by January 29, 2007. Comments received after this date will be considered if it is practical to do so, but assurance of consideration cannot be given to comments received after this date. Robert Einziger PhD, Sr., Materials Engineer, Structural, Mechanics, and Materials Branch, Division of Spent Fuel Storage and Transportation, Office of Nuclear Material Safety and Safeguards, U.S. Nuclear Regulatory Commission, Washington, DC 20005–0001. Comments can also be submitted on the form provided at the Web site, by fax, or e-mail, which are as follows: telephone: (301) 415–2597; fax number: (301) 415–8555; e-mail: *REE1@nrc.gov*. Submittals should be in either Word or WordPerfect; no PDF files.

Dated at Rockville, Maryland, this 7th day of December, 2006.

For the Nuclear Regulatory Commission.

Gordon Bjorkman,

Chief, Structural Mechanics, and Materials Branch Division of Spent Fuel Storage and Transportation Office of Nuclear Material Safety and Safeguards.

[FR Doc. E6–21153 Filed 12–12–06; 8:45 am]

BILLING CODE 7590–01–P

NUCLEAR WASTE TECHNICAL REVIEW BOARD

Repository Development; Yucca Mountain, NV

Board Meeting: January 24, 2007—Las Vegas, Nevada.

The U.S. Nuclear Waste Technical Review Board will meet to discuss U.S. Department of Energy efforts to develop the proposed Yucca Mountain repository.

Pursuant to its authority under section 5051 of Public Law 100–203, Nuclear Waste Policy Amendments Act of 1987, the U.S. Nuclear Waste Technical Review Board will meet in Las Vegas, Nevada, on Wednesday, January 24, 2007. The meeting agenda will include updates on Department of Energy (DOE) technical and scientific activities to the proposed repository for spent nuclear fuel and high-level radioactive waste at Yucca Mountain in Nevada. The meeting will be open to the public, and opportunities for public comment will be provided. The Board is charged by Congress with reviewing the technical and scientific validity of activities undertaken by DOE related to nuclear waste disposal as stipulated in the Nuclear Waste Policy Amendments Act of 1987.

The meeting is scheduled to begin at 8 a.m. and to continue until approximately 6 p.m. It will be held at the Atrium Suites Hotel; 4255 South Paradise Road; Las Vegas, NV 89109; (tel.) 702–369–4400; (fax) 702–369–3770.

A final agenda detailing meeting times, topics, and participants will be available approximately one week before the meeting data. Copies of the meeting agenda can be requested by telephone or obtained from the Board's Web site at *nwtrb.gov.*

Time will be set aside at the end of the day for public comments. Those wanting to speak are encouraged to sign the ''Public Comment Register'' at the check-in table. A time limit may have to be set on individual remarks, but written comments of any length may be submitted for the record. Interested parties also will have the opportunity to submit questions in writing to the Board. As time permits, submitted questions relevant to the discussion may be asked by Board members.

Transcripts of the meetings will be available on the Board's Web site, by e-mail, on computer disk, and on a library-loan basis in paper format from Davonya Barnes of the Board's staff, beginning on February 19, 2007.

A block of rooms has been reserved at the Atrium Suites Hotel for meeting participants. When making a reservation, please state that you are attending the Nuclear Waste Technical Review Board meeting. Reservations should be made by January 8, 2007, to ensure receiving the meeting rate.

For more information, please contact Karyn Severson, NWTRB External Affairs; 2300 Clarendon Boulevard; Suite 1300; Arlington, VA 22201–3367; (tel.) 703–235–4473; (fax) 703–235–4495.

Dated: December 8, 2006.

William D. Barnard,

Executive Director, Nuclear Waste Technical Review Board.

[FR Doc. 06–9650 Filed 12–12–06; 8:45 am]

BILLING CODE 6820–AM–M

OVERSEAS PRIVATE INVESTMENT CORPORATION

Submission for OMB Review; Comment Request

AGENCY: Overseas Private Investment Corporation (OPIC).

ACTION: Request for comments.

SUMMARY: Under the provision of the Paperwork Reduction Act (44 U.S.C. Chapter 35), agencies are required to publish a Notice in the **Federal Register** notifying the public that Agency is preparing an information collection request for OMB review and approval and to request public review and comment on the submission.

Comments are being solicited on the need for the information, its practical utility, the accuracy of the Agency's burden estimate, and on ways to minimize the reporting burden, including automated collection techniques and uses of other forms of technology. The proposed form under review is summarized below.

DATES: Comments must be received within 60 calendar days of this notice.

ADDRESSES: Copies of the subject form and the request for review prepared for submission to OMB may be obtained from the Agency submitting officer. Comments on the form should be submitted to the Agency Submitting Officer.

FOR FURTHER INFORMATION CONTACT: OPIC Agency Submitting Officer: Essie Bryant, Record Manager, Overseas Private Investment Corporation, 1100 New York Avenue, NW., Washington, DC 20527; 202–336–8563.

Summary Form Under Review:

Type of Request: Revised form.

Title: OPIC Self-Monitoring Questionnaire.

Form Number: OPIC–162.

Frequency of Use: Annually for duration of project.

Type of Respondents: Business or other institution (except farms); individuals.

Standard Industrial Classification Codes: All.

Description of Affected Public: U.S. companies or citizens investing overseas.

Reporting Hours: 6.5 hours per project.

Number of Responses: 350 per year.

Federal Cost: $35,000.

Authority for Information Collection: Sections 231, 234(a), 239(d), and 240A of the Foreign Assistance Act of 1961, as amended.

Abstract (Needs and Uses): The questionnaire is completed by OPIC-assisted investors annually. The questionnaire allows OPIC's assessment of effects of OPIC-assisted projects on the U.S. economy and employment, as well as on the environment and economic development abroad.

Dated: December 6, 2006.

Eli Landy,

Senior Counsel, Administrative Affairs, Department of Legal Affairs.

[FR Doc. 06–9649 Filed 12–12–06; 8:45 am]

BILLING CODE 3210–01–M

SECURITIES AND EXCHANGE COMMISSION

[Investment Company Act Release No. 27592; 812–13294]

The Mexico Equity and Income Fund, Inc.; Notice of Application

December 7, 2006.

AGENCY: Securities and Exchange Commission (''Commission'').

APPLICANT: The Mexico Equity and Income Fund, Inc. (the ''Fund'').

ACTIONS: Notice of application for an order under sections 6(c) and 17(b) of the Investment Company Act of 1940 (the ''Act'') for an exemption from section 17(a) of the Act.

SUMMARY OF APPLICATION: Applicant seeks an order that would permit in-kind repurchases of shares of preferred stock of the Fund held by certain affiliated shareholders of the Fund.

FILING DATES: The application was filed on May 16, 2006, and amended on November 17, 2006.

HEARING OR NOTIFICATION OF HEARING: An order granting the requested relief will be issued unless the Commission orders a hearing. Interested persons may request a hearing by writing to the Commission's Secretary and serving applicants with a copy of the request, personally or by mail. Hearing requests should be received by the Commission by 5:30 p.m. on January 2, 2007, and should be accompanied by proof of service on applicants, in the form of an affidavit or, for lawyers, a certificate of service. Hearing requests should state the nature of the writer's interest, the reason for the request, and the issues contested. Persons who wish to be notified of a hearing may request notification by writing to the Commission's Secretary.

ADDRESSES: Secretary, Securities and Exchange Commission, 100 F Street, NE., Washington, DC 20549–1090. Applicant, c/o U.S. Bancorp Fund Services, LLC, 615 East Michigan Street, 2nd Floor, Milwaukee, WI 53202.

FOR FURTHER INFORMATION CONTACT: Bruce R. MacNeil, Senior Counsel, at (202) 551–6817, or Julia Kim Gilmer, Branch Chief, at (202) 551–6821 (Division of Investment Management, Office of Investment Company Regulation).

SUPPLEMENTARY INFORMATION: The following is a summary of the application. The complete application may be obtained for a fee at the Commission's Public Reference Desk, 100 F Street, NE., Washington, DC 20549–0102 (tel. 202–551–5850).

Applicant's Representations

1. The Fund, a Maryland corporation, is registered under the Act as a closed-end management investment company. The Fund's investment objective is to seek high total return through capital appreciation and current income by investing at least 80% of the Fund's assets in equity, convertible and debt securities of Mexican companies and issuers. Applicant states that substantially all of its assets are invested in Mexican securities that are listed on the Bolsa Mexicana de Valores, S.A. de C.V. (the ''Mexican Stock Exchange'').[1] The Fund has issued shares of common stock and preferred stock, both of which are listed and trade on the New York Stock Exchange. The preferred stock has the same rights and qualifications as the Fund's common stock, with exceptions pertaining to liquidation, voting rights, conversion and the right to participate in the In-Kind Tender Offers (as defined below). Pichardo Asset Management, S.A. de C.V. is registered under the Investment Advisers Act of 1940 and serves as the investment manager to the Fund.

2. The Fund proposes to repurchase all of its outstanding shares of preferred stock, through a series of semi-annual in-kind tender offers, which, in each case, will be for up to 25% of the Fund's issued and outstanding shares of preferred stock (the ''In-Kind Tender Offers''). Each preferred stock shareholder participating in an In-Kind Tender Offer may tender their preferred stock for repurchase in-kind for a *pro rata* share of the Fund's portfolio securities (with exceptions generally for odd lots, fractional shares and cash items) at a price equal to 99% of net asset value per share of the preferred stock. The In-Kind Tender Offers will be conducted in accordance with section 23(c)(2) of the Act and rule 13e–4 under the Securities Exchange Act of 1934.

3. Applicant states that the In-Kind Tender Offers are designed to accommodate the needs of both participating and non-participating shareholders. Under the In-Kind Tender Offers, only participating preferred stock shareholders will pay taxes on the gain on appreciated securities distributed in the In-Kind Tender Offers. Non-participating shareholders (both common and preferred) would avoid the imposition of a significant tax liability, which would occur if the Fund sold the appreciated securities to make payments in cash. Applicant further states that the In-Kind Tender Offers' in-kind payments will minimize market disruption, while allowing the Fund to avoid a cascade of distributions, required to preserve its tax status, that would reduce the size of the Fund drastically. Applicant also states that the In-Kind Tender Offers will benefit both the common and preferred shareholders by helping to preserve the value of the portfolio securities received by a participating preferred stockholder and the Fund's common stock shareholders by helping to minimize any disruption to the Fund's net asset value. Applicant requests relief to permit any preferred stock shareholder of the Fund who is an ''affiliated person'' of the Fund solely by reason of owning, controlling, or holding with the power to vote, 5% or more of the Fund's outstanding voting securities (''Affiliated Shareholder'') to participate in the proposed In-Kind Tender Offers.

Applicant's Legal Analysis

1. Section 17(a) of the Act prohibits an affiliated person of a registered investment company, or any affiliated person of the person, acting as principal, from knowingly purchasing or selling any security or other property from or to the company. Section 2(a)(3) of the Act defines an ''affiliated person''

[1] Applicant states that as of September 30, 2006, approximately 95.7% of its portfolio was trading on the Mexican Stock Exchange with the balance trading on securities markets in the United States.

of another person to include any person who directly or indirectly owns, controls, or holds with power to vote 5% or more of the outstanding voting securities of the other person. Applicant states that to the extent that the In-Kind Tender Offers would constitute the purchase or sale of securities by an Affiliated Shareholder, the transactions would be prohibited by section 17(a). Accordingly, applicant requests an exemption from section 17(a) of the Act to the extent necessary to permit the participation of Affiliated Shareholders in the In-Kind Repurchase Offers.

2. Section 17(b) of the Act authorizes the Commission to exempt any transaction from the provisions of section 17(a) if the terms of the transaction, including the consideration to be paid or received, are reasonable and fair and do not involve overreaching on the part of any person concerned, and the transaction is consistent with the policy of each registered investment company and with the general purposes of the Act. Section 6(c) of the Act provides that the Commission may exempt any person, security, or transaction or any class or classes of persons, securities, or transactions, from any provision of the Act or rule thereunder, if and to the extent that such exemption is necessary or appropriate in the public interest and consistent with the protection of investors and the purposes fairly intended by the policy and provisions of the Act.

3. Applicant asserts that the terms of the In-Kind Tender Offers meet the requirements of sections 17(b) and 6(c) of the Act. Applicant asserts that neither the Fund nor an Affiliated Shareholder has any choice as to the portfolio securities to be received as proceeds from the In-Kind Tender Offers. Instead, shareholders will receive their *pro rata* portion of each of the Fund's portfolio securities, excluding (a) securities which, if distributed, would have to be registered under the Securities Act of 1933 (''Securities Act''); (b) securities issued by entities in countries that restrict or prohibit the holdings of securities by non-residents other than through qualified investment vehicles, or whose distribution would otherwise be contrary to applicable local laws, rules or regulations; and (c) certain portfolio assets (such as forward currency exchange contracts and repurchase agreements) that although they may be liquid and marketable, include the assumption of contractual obligations, require special trading facilities, or can only be traded with the counterparty to the transaction in order to effect a change in beneficial ownership. Moreover, applicant states that the portfolio securities to be distributed in the In-Kind Tender Offer will be valued according to an objective, verifiable standard, and the In-Kind Tender Offers are consistent with the investment policies of the Fund. Applicant also believes that the In-Kind Tender Offers are consistent with the general purposes of the Act because the interests of all shareholders are equally protected and no Affiliated Shareholder would receive an advantage or special benefit not available to any other shareholder participating in the In-Kind Tender Offers.

Applicant's Conditions

Applicant agrees that any order granting the requested relief will be subject to the following conditions:

1. Applicant will distribute to shareholders participating in the In-Kind Tender Offers an in-kind *pro rata* distribution of portfolio securities of applicant. The *pro rata* distribution will not include: (a) Securities that, if distributed, would be required to be registered under the Securities Act; (b) securities issued by entities in countries that restrict or prohibit the holdings of securities by non-residents other than through qualified investment vehicles, or whose distribution would otherwise be contrary to applicable local laws, rules or regulations; and (c) certain portfolio assets (such as forward currency exchange contracts and repurchase agreements) that although they may be liquid and marketable, include the assumption of contractual obligations, require special trading facilities or can only be traded with the counterparty to the transaction in order to effect a change in beneficial ownership. Cash will be paid for any portion of applicant's assets represented by cash and cash equivalents (such as certificates of deposit, commercial paper and repurchase agreements) and other assets which are not readily distributable (including receivables and prepaid expenses), net of all liabilities (including accounts payable). In addition, applicant may pay cash for fractional shares and/or odd lots of securities and/or amounts attributable to any cash positions (including short-term non-equity securities); distribute odd lots and any cash position to shareholders; or round off (up or down) fractional shares so as to eliminate them prior to distribution. Applicant may also distribute a higher *pro rata* percentage of other portfolio securities to represent such items.

2. The securities distributed to stockholders pursuant to the In-Kind Tender Offers will be limited to securities that are traded on a public securities market or for which quoted bid and asked prices are available.

3. The securities distributed to stockholders pursuant to the In-Kind Tender Offers will be valued in the same manner as they would be valued for purposes of computing applicant's net asset value, which, in the case of securities traded on a public securities market for which quotations are available, is their last reported sales price on the exchange on which the securities are primarily traded or at the last sales price on a public securities market, or, if the securities are not listed on an exchange or a public securities market or if there is no such reported price, the average of the most recent bid and asked price (or, if no such asked price is available, the last quoted bid price).

4. Applicant will maintain and preserve for a period of not less than six years from the end of the fiscal year in which any In-Kind Tender Offer occurs, the first two years in an easily accessible place, a written record of such In-Kind Repurchase Offer, that includes the identity of each shareholder of record that participated in such In-Kind Repurchase Offer, whether that shareholder was an Affiliated Shareholder, a description of each security distributed, the terms of the distribution, and the information or materials upon which the valuation was made.

For the Commission, by the Division of Investment Management, under delegated authority.

Nancy M. Morris,

Secretary.

[FR Doc. E6–21166 Filed 12–12–06; 8:45 am]

BILLING CODE 8011–01–P

SECURITIES AND EXCHANGE COMMISSION

[Release No. 34–54885; File No. SR–Amex–2006–105]

Self-Regulatory Organizations; American Stock Exchange LLC; Notice of Filing of a Proposed Rule Change Relating to Fees for the Routing of Orders to Other Market Centers Through a Private Linkage

December 6, 2006.

Pursuant to Section 19(b)(1) of the Securities Exchange Act of 1934 (''Act'')[1] and Rule 19b–4 thereunder,[2] notice is hereby given that on November 30, 2006, the American Stock Exchange LLC (''Amex'' or ''Exchange'') filed with

[1] 15 U.S.C. 78s(b)(1).

[2] 17 CFR 240.19b–4.

the Securities and Exchange Commission (''Commission'') the proposed rule change as described in Items I, II, and III below, which Items have been substantially prepared by the Exchange. The Exchange has designated this proposal as one establishing or changing a due, fee, or other charge imposed by a self-regulatory organization pursuant to Section 19(b)(3)(A)(ii) of the Act [3] and Rule 19b–4(f)(2) thereunder,[4] which renders the proposal effective upon filing with the Commission. The Commission is publishing this notice to solicit comments on the proposed rule change from interested persons.

I. Self-Regulatory Organization's Statement of the Terms of Substance of the Proposed Rule Change

The Exchange proposes to revise the equities and Exchange Traded Fund Shares (''ETFs'') Fee Schedules to provide for various fees related to the routing of orders to other market centers through a private linkage.

The text of the proposed rule change is available on the Exchange's Web site (*http://www.amex.com*), at the Exchange's Office of the Secretary, and at the Commission's Public Reference Room.

II. Self-Regulatory Organization's Statement of the Purpose of, and Statutory Basis for, the Proposed Rule Change

In its filing with the Commission, the Exchange included statements concerning the purpose of, and basis for, the proposed rule change and discussed any comments it received on the proposed rule change. The text of these statements may be examined at the places specified in Item IV below. The Exchange has prepared summaries, set forth in Sections A, B, and C below, of the most significant aspects of such statements.

A. Self-Regulatory Organization's Statement of the Purpose of, and Statutory Basis for, the Proposed Rule Change

1. Purpose

The Exchange proposes to establish fees for the routing of orders between market centers using its ''private linkage.'' Private linkages are broker-dealer members of other market centers trading Amex-listed equities and ETFs through which Amex will route orders to access protected quotes (*i.e.*, quotes being disseminated by an ''automated trading center'' [5]) when those quotes are better than those available at Amex. Use of a private linkage will begin with the implementation of the Exchange's new hybrid market trading platform (known as ''AEMI''). The AEMI trading platform will become operative prior to the final date set by the Commission for full operation of all automated trading centers that intend to qualify their quotations for trade-through protection under Rule 611 of Regulation NMS (the date known as the ''Trading Phase Date''). The Exchange has adopted rules for the use of AEMI prior to the Regulation NMS Trading Phase Date [6] and has obtained exemptive relief [7] from its obligation to use the ITS electronic communications network to route orders to other markets and use the private linkage instead. Amex will incur charges for routing orders to other market centers through the private linkage and proposes to pass some of those charges on to its members. The charges to be passed on include clearing and market access charges.

Amex has entered into a contract with a broker-dealer and a clearing firm to route orders to other market centers and to clear the resulting executions. The contract provides that clearing charges will be assessed monthly based on the average size of the order routed to the other market centers. The average size of the order ticket routed to the other market centers is based on the total volume of shares routed on behalf of Amex each trading day divided by the number of order tickets routed that resulted in an execution. For example, if 100 order tickets representing 100,000 shares are routed on behalf of Amex on a given day resulting in 80 executions, the clearing fee charged per share, as set forth on the following chart, would be $0.0005 (100,000 ÷ 80 = 1,250, the average order ticket size) resulting in a total clearing fee of $50 incurred by Amex for that trading day:

Average size of outbound order tickets	Clearing price per share
> = 0–150	$0.001
> = 150 and < 300	0.0008
> = 300 and < 500	0.0007
> = 500 and < 750	0.0006
> = 750 and < 1500	0.0005
> = 1500 and < 2500	0.0004
> = 2500 and < 6000	0.0003
> = 6000	0.000275

The clearing charge of $50 would be divided among the orders executed that trading day based upon the number of shares executed. Thus, for example, on that trading day a member submitted two orders—one order for 100 shares and one order for 1,000 shares. Both orders were executed in full through the private linkage. The clearing charges assessed to the member for the 100 share order would be $0.05 (100 × $0.0005) and the clearing charge assessed to the member for the 1,000 share order would be $0.50 (1,000 × $0.0005). Amex would accumulate the daily clearing charges and bill members monthly the daily accumulated charges.

2. Statutory Basis

The proposed rule change is consistent with Section 6(b) of the Act [8] in general and furthers the objectives of Section 6(b)(4) of the Act [9] in particular in that it is intended to assure the equitable allocation of reasonable dues, fees, and other charges among its members and issuers and other persons using its facilities. Specifically, the Exchange is proposing to pass through clearing charges it has incurred for orders routed to other market centers through the Exchange's private linkage.

B. Self-Regulatory Organization's Statement on Burden on Competition

The Exchange believes that the proposed rule change does not impose any burden on competition that is not necessary or appropriate in furtherance of the purposes of the Act.

C. Self-Regulatory Organization's Statement on Comments on the Proposed Rule Change Received From Members, Participants, or Others

No written comments were solicited or received with respect to the proposed rule change.

III. Date of Effectiveness of the Proposed Rule Change and Timing for Commission Action

The foregoing proposed rule change has become effective pursuant to Section 19(b)(3)(A)(ii) of the Act [10] and paragraph (f)(2) of Rule 19b–4 thereunder,[11] because it establishes or

[3] 15 U.S.C. 78s(b)(3)(A)(ii).

[4] 17 CFR 240.19b–4(f)(2).

[5] The terms ''automated trading center'' and ''protected quotation'' are defined in Rule 600(b) of Regulation NMS, 17 CFR 242.600(b).

[6] *See* Securities Exchange Act Release No. 54709 (November 3, 2006), 71 FR 65847 (November 9, 2006) (order approving SR–Amex 2006–72).

[7] *See* Letter to Claire P. McGrath, Senior Vice President and General Counsel, Amex, from David S. Shillman, Associate Director, Division of Market Regulation, Commission, dated November 3, 2006.

[8] 15 U.S.C. 78f(b).

[9] 15 U.S.C. 78f(b)(4).

[10] 15 U.S.C. 78s(b)(3)(A)(ii).

[11] 17 CFR 240.19b–4(f)(2).

changes a due, fee, or other charge imposed by the Exchange. At any time within 60 days of the filing of the proposed rule change, the Commission may summarily abrogate such rule change if it appears to the Commission that such action is necessary or appropriate in the public interest, for the protection of investors, or otherwise in furtherance of the purposes of the Act.

IV. Solicitation of Comments

Interested persons are invited to submit written data, views, and arguments concerning the foregoing, including whether the proposed rule change is consistent with the Act. Comments may be submitted by any of the following methods:

Electronic Comments

- Use the Commission's Internet comment form (*http://www.sec.gov/rules/sro.shtml*); or
- Send an e-mail to *rule-comments@sec.gov*. Please include File Number SR–Amex–2006–105 on the subject line.

Paper Comments

- Send paper comments in triplicate to Nancy M. Morris, Secretary, Securities and Exchange Commission, Station Place, 100 F Street, NE, Washington, DC 20549–1090.

All submissions should refer to File Number SR–Amex–2006–105. This file number should be included on the subject line if e-mail is used. To help the Commission process and review your comments more efficiently, please use only one method. The Commission will post all comments on the Commission's Internet Web site (*http://www.sec.gov/rules/sro.shtml*). Copies of the submission, all subsequent amendments, all written statements with respect to the proposed rule change that are filed with the Commission, and all written communications relating to the proposed rule change between the Commission and any person, other than those that may be withheld from the public in accordance with the provisions of 5 U.S.C. 552, will be available for inspection and copying in the Commission's Public Reference Room. Copies of such filing also will be available for inspection and copying at the principal office of the Exchange. All comments received will be posted without change; the Commission does not edit personal identifying information from submissions. You should submit only information that you wish to make available publicly. All submissions should refer to File Number SR–Amex–2006–105 and should be submitted on or before January 3, 2007.

For the Commission, by the Division of Market Regulation, pursuant to delegated authority.[12]

Florence E. Harmon,

Deputy Secretary.

[FR Doc. E6–21161 Filed 12–12–06; 8:45 am]

BILLING CODE 8011–01–P

SECURITIES AND EXCHANGE COMMISSION

[Release No. 34–54882; File No. SR–Amex–2006–80]

Self-Regulatory Organizations; American Stock Exchange LLC; Order Approving Proposed Rule Change To Amend Rule 777 Regarding Depository Eligibility

December 6, 2006.

I. Introduction

On August 21, 2006, the American Stock Exchange LLC (''Amex'') filed with the Securities and Exchange Commission (''Commission'') proposed rule change SR–Amex–2006–80 pursuant to Section 19(b)(1) of the Securities Exchange Act of 1934 (''Act'').[1] Notice of the proposal was published in the **Federal Register** on September 21, 2006.[2] No comment letters were received. For the reasons discussed below, the Commission is approving the proposed rule change as amended.

II. Description

In general, Amex is amending its depository eligibility requirement. The rule change: (i) Deletes a reference to a distinction between domestic and foreign issuers; (ii) deletes an exception for securities whose terms cannot be reasonably modified to meet the criteria for depository eligibility at all securities depositories; and (iii) deletes additional requirements imposed by the rule that are no longer necessary.

Previously, before an issue of securities could be listed, Rule 777(a) required only a domestic issuer to represent to Amex that a CUSIP number identifying the securities had been included in the file of eligible issues maintained by a securities depository registered with the Commission as a clearing agency under section 17A of the Act.[3] The same requirement did not apply to foreign issuers. However, exclusion of foreign issuers is no longer necessary because they have the capacity to comply with Rule 777 and have been doing so voluntarily for years.

Amex's rule change also deletes the exception in Rule 777(a) for securities whose terms cannot be reasonably modified to meet the criteria for depository eligibility at all securities depositories. The exception was originally included in Rule 777(a) because, among other things, various states and countries precluded the book-entry issuance of securities. Following implementation of Rule 777(a), however, most, if not all, states have amended their corporate statutes to allow for book-entry issuance, and as a result the exception is no longer needed to accommodate such issuers.

Furthermore, Amex's rule change deletes a provision that prevented new issues distributed by an underwriting syndicate prior to the date a securities depository system for monitoring repurchases of distributed shares by the underwriting syndicate from becoming depository eligible because such a system has become available. Prior to the availability of such a system, a managing underwriter could delay the date a security was deemed depository eligible for up to three months after commencement of trading on Amex. Since the approval of Rule 777, The Depository Trust Company (''DTC'')[4] implemented its Initial Public Offering Tracking System[5] that enables lead managers and syndicate members of equity underwritings to monitor repurchases of distributed shares in an automated book-entry environment. Since DTC has the capability to monitor repurchases of distributed shares, the requirements listed in Rule 777(b) are no longer necessary, and Amex has deleted Rule 777(b) in its entirety.

Finally, Amex has cross-referenced rules 776 and 777 in Part 1 of the Amex Company Guide to clarify that Rules 776 and 777 are initial and continued listing standards applicable to companies listed on Amex.

III. Discussion

Section 19(b) of the Act directs the Commission to approve a proposed rule change of a self-regulatory organization if it finds that such proposed rule change is consistent with the requirements of the Act and the rules and regulations thereunder applicable to

---

[12] 17 CFR 200.30–3(a)(12).

[1] 15 U.S.C. 78s(b)(1).

[2] Securities Exchange Act Release No. 54442 (September 14, 2006), 71 FR 55229.

[3] 15 U.S.C. 78q–1.

[4] DTC is a securities depository registered with the Commission under sections 17A and 19 of the Act as a clearing agency.

[5] Securities Exchange Act Release No. 37208 (May 13, 1996), 61 FR 25253 (May 20, 1996) [File No. SR–DTC–95–27].

such organization.[6] Section 6(b)(5) of the Act requires, among other things, that the rules of an exchange be designed to foster cooperation and coordination with persons engaged in regulating, clearing, settling, processing information with respect to, and facilitating transactions in securities and to remove impediments to and perfect the mechanism of a free and open market and a national market system.[7] The Commission finds that Amex's rule change is consistent with these requirements. By revising its rule regarding depository eligibility, Amex's proposed rule change fosters cooperation and coordination with persons engaged in clearing and settling transactions in securities and perfects the mechanism of a free and open market and a national market system.[8]

IV. Conclusion

On the basis of the foregoing, the Commission finds that the proposed rule change is consistent with the requirements of the Act and the rules and regulations thereunder applicable to a national securities exchange and in particular Section 6(b)(5) of the Act and the rules and regulations thereunder.

It is therefore ordered, pursuant to Section 19(b)(2) of the Act,[9] that the proposed rule change (File No. SR–Amex–2006–80) be and hereby is approved.

For the Commission by the Division of Market Regulation, pursuant to delegated authority.[10]

Florence E. Harmon,

Deputy Secretary.

[FR Doc. E6–21169 Filed 12–12–06; 8:45 am]

BILLING CODE 8011–01–P

[6] 15 U.S.C. 78s(b).

[7] 15 U.S.C. 78f(b)(5).

[8] In approving the proposed rule change, the Commission considered the proposal's impact on efficiency, competition, and capital formation. 15 U.S.C. 78c(f).

[9] 15 U.S.C. 78s(b)(2).

[10] 17 CFR 200.30–3(a)(12).

SECURITIES AND EXCHANGE COMMISSION

[Release No. 34–54884; File No. SR–BSE–2006–52]

Self-Regulatory Organizations; Boston Stock Exchange, Inc.; Notice of Filing and Order Granting Accelerated Approval of a Proposed Rule Change Relating to the Time a Marketable Order Is Exposed on the BOX Book

December 6, 2006.

Pursuant to Section 19(b)(1) of the Securities Exchange Act of 1934 (''Act''),[1] and Rule 19b–4 thereunder,[2] notice is hereby given that on November 15, 2006, the Boston Stock Exchange, Inc. (''BSE'' or ''Exchange'') filed with the Securities and Exchange Commission (''Commission'') the proposed rule change as described in Items I and II below, which Items have been prepared by BSE. The Commission is publishing this notice to solicit comments on the proposed rule change from interested persons and is approving the proposal on an accelerated basis.

I. Self-Regulatory Organization's Statement of the Terms of Substance of the Proposed Rule Change

The Exchange proposes to amend Section 16 (Execution and Price/Time Priority) of Chapter V of the Rules of the Boston Options Exchange (''BOX'') to reduce the time that an order is exposed in the internal BOX market when BOX is not matching the national best bid or offer (''NBBO'') from three seconds to one second. The text of the proposed rule change is available on the Exchange's Internet Web site (*http://www.bostonstock.com*), at the Exchange's principal office, and at the Commission's Public Reference Room.

II. Self-Regulatory Organization's Statement of the Purpose of, and Statutory Basis for, the Proposed Rule Change

In its filing with the Commission, the Exchange included statements concerning the purpose of, and basis for, the proposed rule change and discussed any comments it received on the proposal. The text of these statements may be examined at the places specified in Item III below. The Exchange has prepared summaries, set forth in Sections A, B, and C below, of the most significant aspects of such statements.

A. Self-Regulatory Organization's Statement of the Purpose of, and the Statutory Basis for, the Proposed Rule Change

1. Purpose

The Exchange proposes to amend Section 16 (Execution and Price/Time Priority) of Chapter V of the BOX Rules to reduce the time that an order is exposed in the internal BOX market when the BOX best bid and offer (''BBO'') is not matching the NBBO from three seconds to one second.[3] The Exchange's experience with the Filter has shown that one second is ample time for any party interested in trading with the exposed order at the NBBO to generate and send its contra-side order to the BOX Trading Host for matching. Consequently, the Exchange believes that a reduction in this exposure time will not result in an appreciable difference in the number of executions on BOX through the use of the Filter. In addition, the reduction in exposure time will permit the earlier generation and sending of an InterMarket Linkage P/A Order in the case where BOX is unable to provide the NBBO price. Therefore, the Exchange believes that the filtered order would have an improved chance of being executed at the NBBO before the market moves to the disfavor of the order.[4]

2. Statutory Basis

The Exchange believes that the proposed rule change is consistent with Section 6(b)[5] of the Act, in general, and furthers the objectives of Section 6(b)(5)[6] in particular in that it is designed to promote just and equitable principles of trade, and to protect investors and the public interest.

B. Self-Regulatory Organization's Statement on Burden on Competition

The Exchange does not believe that the proposed rule change will impose any burden on competition not necessary or appropriate in furtherance of the purposes of the Act.

C. Self-Regulatory Organization's Statement on Comments on the Proposed Rule Change Received From Members, Participants or Others

The Exchange has neither solicited nor received written comments on the proposed rule change.

III. Solicitation of Comments

Interested persons are invited to submit written data, views, and arguments concerning the foregoing, including whether the proposed rule change is consistent with the Act. Comments may be submitted by any of the following methods:

[1] 15 U.S.C. 78s(b)(l).

[2] 17 CFR 240. 19b–4.

[3] *See* BOX Rules, Chapter V, Section 16(b) ''Filtering of BOX In-Bound Orders to Prevent Trade-Throughs.'' This rule and the mechanism utilized by BOX for this purpose are called the ''Filter.''

[4] The Exchange asked the Commission to incorporate in the Purpose section of this notice the purpose discussion in the Form 19b–4 submitted for this filing rather than the discussion in the Exhibit 1 for the filing. E-mail communication between Brian Donnelly, AVP Regulation & Compliance, BSE, and Leah Mesfin, Special Counsel, Division of Market Regulation, Commission on December 5, 2006.

[5] 15 U.S.C. 78f(b).

[6] 15 U.S.C. 78f(b)(5).

Electronic Comments

- Use the Commission's Internet comment form (*http://www.sec.gov/rules/sro.shtml*); or
- Send an e-mail to *rule-comments@sec.gov.* Please include File No. SR–BSE–2006–52 on the subject line.

Paper Comments

- Send paper comments in triplicate to Nancy M. Morris, Secretary, Securities and Exchange Commission, 100 F Street, NE., Washington, DC 20549–1090.

All submissions should refer to File Number SR–BSE–2006–52. This file number should be included on the subject line if e-mail is used. To help the Commission process and review your comments more efficiently, please use only one method. The Commission will post all comments on the Commissions Internet Web site (*http://www.sec.gov/rules/sro.shtml*). Copies of the submission, all subsequent amendments, all written statements with respect to the proposed rule change that are filed with the Commission, and all written communications relating to the proposed rule change between the Commission and any person, other than those that may be withheld from the public in accordance with the provisions of 5 U.S.C. 552, will be available for inspection and copying in the Commission's Public Reference Room. Copies of the filing also will be available for inspection and copying at the principal office of BSE. All comments received will be posted without change; the Commission does not edit personal identifying information from submissions. You should submit only information that you wish to make available publicly. All submissions should refer to File Number SR–BSE–2006–52 and should be submitted on or before January 3, 2007.

IV. Commission's Findings and Order Granting Accelerated Approval of Proposed Rule Change

The Commission finds that the proposed rule change is consistent with the requirements of the Act and the rules and regulations thereunder applicable to a national securities exchange.[7] Specifically, the Commission believes that the proposal is consistent with Section 6(b)(5) of the Act,[8] which requires, among other things, that the rules of national securities exchange be designed to prevent fraudulent and manipulative practices, to promote just and equitable principles of trade, to remove impediments to and perfect the mechanism for a free and open market and a national market system, and, in general, to protect investors and the public interest.

The foregoing proposed rule change would reduce the time that a marketable order is exposed on the BOX Book in the event that the BBO is not at the NBBO. Currently, when the BOX market is not at the NBBO, a marketable order that would sit on the BOX Book for three seconds before being routed to an exchange displaying the NBBO or returned to the Options Participant. The proposed rule change would reduce the amount of time that such order would sit on the BOX Book to one second. The Commission notes that the Exchange has represented that one second is ample time for any party interested in trading with the exposed BOX order at the NBBO to send in a contra-side order to the BOX Trading Host for matching. The Exchange has also stated that, consequently, it believes that the reduction in exposure time will not result in an appreciable difference in the number of executions on BOX through the use of the Filter. The Commission also notes that the Exchange has argued that the reduction in exposure time on the BOX Book would improve the chances of a marketable order being executed at the NBBO before the market moves and (potentially) disfavors the order.

The Commission finds good cause, pursuant to Section 19(b)(2) of the Act,[9] for approving the proposed rule change prior to the 30th day of the date of publication of the notice thereof in the **Federal Register**. The Commission notes that the proposal does not alter the order handling and routing procedures of the Filter in any other way than to reduce the exposure time for a marketable order on the BOX Book. The Commission believes that the proposed reduction in exposure time on the BOX Book should improve the efficient handling of marketable orders and minimize the risk of such orders failing to receive their expected execution at the NBBO. The Commission also notes that granting accelerated approval to this proposal would allow the Exchange to implement this change in the Filter's functionality without any further delay.

V. Conclusion

It is therefore ordered, pursuant to Section 19(b)(2) of the Act,[10] that the proposed rule change (SR–BSE–2006–52) is hereby approved on an accelerated basis.

For the Commission, by the Division of Market Regulation, pursuant to delegated authority.[11]

Florence E. Harmon,

Deputy Secretary.

[FR Doc. E6–21158 Filed 12–12–06; 8:45 am]

BILLING CODE 8011–01–P

[7] In approving this proposal, the Commission has considered the proposed rule's impact on efficiency, competition, and capital formation. 15 U.S.C. 78c(f).

[8] 15 U.S.C. 78f(b)(5).

[9] 15 U.S.C. 78s(b)(2).

[10] 15 U.S.C. 78s(b)(2).

[11] 17 CFR 200.30–3(a)(12).

SECURITIES AND EXCHANGE COMMISSION

[Release No. 34–54883; File No. SR–CBOE–2006–102]

Self-Regulatory Organizations; Chicago Board Options Exchange, Incorporated; Notice of Filing and Immediate Effectiveness of Proposed Rule Change To Increase the Class Quoting Limit in the Option Class NYSE Group, Inc. (NYX)

December 6, 2006.

Pursuant to Section 19(b)(1) of the Securities Exchange Act of 1934 (''Act'')[1] and Rule 19b–4 thereunder,[2] notice is hereby given that on December 1, 2006, the Chicago Board Options Exchange, Incorporated (''CBOE'' or ''Exchange'') filed with the Securities and Exchange Commission (''Commission'') the proposed rule change as described in Items I and II below, which Items have been prepared by the CBOE. The Exchange has designated this proposal as one constituting a stated policy, practice, or interpretation with respect to the meaning, administration, or enforcement of an existing rule under Section 19(b)(3)(A)(i) of the Act,[3] and Rule 19b–4(f)(1) thereunder,[4] which renders the proposal effective upon filing with the Commission. The Commission is publishing this notice to solicit comments on the proposed rule change from interested persons.

I. Self-Regulatory Organization's Statement of the Terms of Substance of the Proposed Rule Change

CBOE proposes to increase the class quoting limit in the option class NYSE Group, Inc. (NYX). The text of the proposed rule change is available on CBOE's Web site (*http://*

[1] 15 U.S.C. 78s(b)(1).

[2] 17 CFR 240.19b–4.

[3] 15 U.S.C. 78s(b)(3)(A)(i).

[4] 17 CFR 240.19b–4(f)(1).

www.cboe.com), at the CBOE's Office of the Secretary, and at the Commission's public reference room.

II. Self-Regulatory Organization's Statement of the Purpose of, and Statutory Basis for, the Proposed Rule Change

In its filing with the Commission, the CBOE included statements concerning the purpose of, and basis for, the proposed rule change and discussed any comments it received on the proposed rule change. The text of these statements may be examined at the places specified in Item IV below. The CBOE has prepared summaries, set forth in Sections A, B, and C below, of the most significant aspects of such statements.

A. Self-Regulatory Organization's Statement of the Purpose of, and Statutory Basis for, the Proposed Rule Change

1. Purpose

CBOE Rule 8.3A, Maximum Number of Market Participants Quoting Electronically per Product, establishes class quoting limits (''CQLs'') for each class traded on the Hybrid Trading System.[5] A CQL is the maximum number of quoters that may quote electronically in a given product and the current levels are established from 25–40, depending on the trading activity of the particular product.

CBOE Rule 8.3A, Interpretation .01(c) provides a procedure by which the President of the Exchange may increase the CQL for a particular product. In this regard, the President of the Exchange may increase the CQL in exceptional circumstances, which are defined in the rule as ''* * * substantial trading volume, whether actual or expected.''[6] The effect of an increase in the CQL is procompetitive in that it increases the number of market participants that may quote electronically in a product. The purpose of this filing is to increase the CQL in the option class NYX from its current limit of 30 to 40.

The national average daily volume in NYX has increased substantially over the last two months. Increasing the CQL in NYX options will enable the Exchange to enhance the liquidity offered, thereby offering deeper and more liquid markets.

2. Statutory Basis

The Exchange believes the proposed rule change is consistent with the Act and the rules and regulations under the Act applicable to a national securities exchange and, in particular, the requirements of Section 6(b) of the Act.[7] Specifically, the Exchange believes the proposed rule change is consistent with the Section 6(b)(5)[8] requirements that the rules of an exchange be designed to promote just and equitable principles of trade, to prevent fraudulent and manipulative acts and, in general, to protect investors and the public interest.

B. Self-Regulatory Organization's Statement on Burden on Competition

CBOE does not believe that the proposed rule change will impose any burden on competition not necessary or appropriate in furtherance of the purposes of the Exchange Act.

C. Self-Regulatory Organization's Statement on Comments on the Proposed Rule Change Received From Members, Participants, or Others

The Exchange neither received nor solicited written comments on the proposal.

III. Date of Effectiveness of the Proposed Rule Change and Timing for Commission Action

The foregoing proposed rule change will take effect upon filing with the Commission pursuant to Section 19(b)(3)(A)(i) of the Act[9] and Rule 19b–4(f)(1) thereunder,[10] because it constitutes a stated policy, practice, or interpretation with respect to the meaning, administration, or enforcement of an existing rule.

At any time within 60 days of the filing of the proposed rule change, the Commission may summarily abrogate such rule change if it appears to the Commission that such action is necessary or appropriate in the public interest, for the protection of investors, or otherwise in furtherance of the purposes of the Act.

IV. Solicitation of Comments

Interested persons are invited to submit written data, views, and arguments concerning the foregoing, including whether the proposed rule change is consistent with the Act. Comments may be submitted by any of the following methods:

Electronic Comments

- Use the Commission's Internet comment form (*http://www.sec.gov/rules/sro.shtml*); or
- Send an e-mail to *rule-comments@sec.gov*. Please include File Number SR–CBOE–2006–102 on the subject line.

Paper Comments

- Send paper comments in triplicate to Nancy M. Morris, Secretary, Securities and Exchange Commission, 100 F Street, NE., Washington, DC 20549–1090.

All submissions should refer to File Number SR–CBOE–2006–102. This file number should be included on the subject line if e-mail is used. To help the Commission process and review your comments more efficiently, please use only one method. The Commission will post all comments on the Commission's Internet Web site (*http://www.sec.gov/rules/sro.shtml*). Copies of the submission, all subsequent amendments, all written statements with respect to the proposed rule change that are filed with the Commission, and all written communications relating to the proposed rule change between the Commission and any person, other than those that may be withheld from the public in accordance with the provisions of 5 U.S.C. 552, will be available for inspection and copying in the Commission's Public Reference Room. Copies of such filing also will be available for inspection and copying at the principal office of the CBOE. All comments received will be posted without change; the Commission does not edit personal identifying information from submissions. You should submit only information that you wish to make available publicly. All submissions should refer to File Number SR–CBOE–2006–102 and should be submitted on or before January 3, 2007.

For the Commission, by the Division of Market Regulation, pursuant to delegated authority.[11]

Florence E. Harmon,

Deputy Secretary.

[FR Doc. E6–21160 Filed 12–12–06; 8:45 am]

BILLING CODE 8011–01–P

[5] *See* CBOE Rule 8.3A.01.

[6] ''Any actions taken by the President of the Exchange pursuant to this paragraph will be submitted to the SEC in a rule filing pursuant to Section 19(b)(3)(A) of the Exchange Act.'' CBOE Rule 8.3A.01(c).

[7] 15 U.S.C. 78f(b).

[8] 15 U.S.C. 78f(b)(5).

[9] 15 U.S.C. 78s(b)(3)(A)(i).

[10] 17 CFR 240.19b–4(f)(1).

[11] 17 CFR 200.30–3(a)(12).

SECURITIES AND EXCHANGE COMMISSION

[Release No. 34–54876; File No. SR–CBOE–2006–103]

Self-Regulatory Organizations; Chicago Board Options Exchange, Incorporated; Notice of Filing and Immediate Effectiveness of Proposed Rule Change Relating to the Extension of the Pilot Period Applicable to CBOE's Listing and Trading of Options on the iShares MSCI Emerging Markets Index Fund

December 5, 2006.

Pursuant to Section 19(b)(1) of the Securities Exchange Act of 1934 (the ''Act''),[1] and Rule 19b–4 thereunder,[2] notice is hereby given that on December 4, 2006, the Chicago Board Options Exchange, Incorporated (''Exchange'' or ''CBOE'') filed with the Securities and Exchange Commission (the ''Commission'') the proposed rule change as described in Items I and II below, which Items have been prepared by the Exchange. The Exchange filed this proposal as a ''non-controversial'' proposed rule change pursuant to Section 19(b)(3)(A)(iii) of the Act[3] and Rule 19b–4(f)(6) thereunder,[4] which renders the proposed rule change effective upon filing with the commission.[5] The Commission is publishing this notice to solicit comments on the proposed rule change from interested persons.

I. Self-Regulatory Organization's Statement of the Terms of Substance of the Proposed Rule Change

The Chicago Board Options Exchange, Incorporated (''CBOE'' or ''Exchange'') proposes to extend the pilot period applicable to CBOE's listing and trading of options on the iShares MSCI Emerging Markets Index Fund (''Fund Options''). CBOE is not proposing any textual changes to the rules of CBOE. The text of the proposed rule change is available on the Exchange's Web site (*http://www.cboe.com*), the Office of the Secretary, CBOE, and at the Commission's Public Reference Room.

II. Self-Regulatory Organization's Statement of the Purpose of, and Statutory Basis for, the Proposed Rule Change

In its filing with the Commission, CBOE included statements concerning the purpose of and basis for the proposed rule change and discussed any comments it received on the proposed rule change. The text of those statements may be examined at the places specified in Item IV below. The CBOE has prepared summaries, set forth in sections A, B, and C below, of the most significant parts of such statements.

A. Self-Regulatory Organization's Statement of the Purpose of, and the Statutory Basis for, the Proposed Rule Change

1. Purpose

On April 10, 2006, the Commission approved a CBOE proposal (SR–CBOE–2006–32) to list and trade Fund Options.[6] SR–CBOE–2006–32 was approved for a sixty-day pilot period that was due to expire on June 9, 2006 (''Pilot''). On May 31, 2006, CBOE filed SR–CBOE–2006–56 which extended the Pilot for an additional 90 days, until September 7, 2006.[7] On August 21, 2006, CBOE filed SR–CBOE–2006–72 which extended the Pilot for an additional 90 days, until December 7, 2006.[8]

The Fund Options will continue to meet substantially all of the listing and maintenance standards in CBOE Rules 5.3.06 and 5.4.08, respectively. For the requirements that are not met, the Exchange continues to represent that sufficient mechanisms exist that would provide the Exchange with adequate surveillance and regulatory information with respect to the Fund. Continuation of the Pilot would permit the Exchange to continue to work with the Bolsa Mexicana de Valores (''Bolsa'') to develop a surveillance sharing agreement.[9]

CBOE now proposes to extend the Pilot for an additional 90 days, until June 7, 2007.

2. Statutory Basis

The Exchange believes the proposed rule change is consistent with the Act and the rules and regulations thereunder applicable to a national securities exchange and, in particular, the requirements of Section 6(b) of the Act.[10] Specifically, the Exchange believes the proposed rule change is consistent with the Section 6(b)(5) Act[11] requirements that the rules of an exchange be designed to promote just and equitable principles of trade, to prevent fraudulent and manipulative acts and, in general, to protect investors and the public interest.

B. Self-Regulatory Organization's Statement on Burden on Competition

CBOE does not believe that the proposed rule change will impose any burden on competition that is not necessary or appropriate in furtherance of purposes of the Act.

C. Self-Regulatory Organization's Statement on Comments on the Proposed Rule Change Received From Members, Participants, or Others

No written comments were either solicited or received with respect to the proposed rule change.

III. Date of Effectiveness of the Proposed Rule Change and Timing for Commission Action

The foregoing proposed rule change has become effective pursuant to Section 19(b)(3)(A) of the Act[12] and Rule 19b–4(f)(6) thereunder[13] because the proposed rule change: (1) Does not significantly affect the protection of investors or the public interest; (2) does not impose any significant burden on competition; and (3) does not become operative for 30 days from the date of filing, or such shorter time as the Commission may designate if consistent with the protection of investors and the public interest pursuant to Section 19(b)(3)(A) of the Act[14] and Rule 19b–4(f)(6)[15] thereunder.

The Exchange has requested that the Commission waive the five-day pre-filing notice requirement and the 30-day operative delay.[16] The Commission is exercising its authority to waive the five-day pre-filing notice requirement and believes that the waiver of the 30-day operative delay is consistent with the protection of investors and the

[1] 15 U.S.C. 78s(b)(1).

[2] 17 CFR 240.19b–4.

[3] 15 U.S.C. 78s(b)(3)(A)(iii).

[4] 17 CFR 240.19b–4(f)(6).

[5] The Exchange requested the Commission to waive the five-day pre-filing notice requirement and the 30-day operative delay, as specified in Rule 19b–4(f)(6)(iii). 17 CFR 240.19b–4(f)(6)(iii).

[6] *See* Securities Exchange Act Release No. 53621 (April 10, 2006), 71 FR 19568 (April 14, 2006) (SR–CBOE–2006–32).

[7] *See* Securities Exchange Act Release No. 53930 (June 1, 2006), 71 FR 33322 (June 8, 2006) (granting immediate effectiveness to SR–CBOE–2006–56).

[8] *See* Securities Exchange Act Release No. 54347 (August 22, 2006), 71 FR 51242 (August 29, 2006) (granting immediate effectiveness to SR–CBOE–2006–72).

[9] Telephone conference between Patrick Sexton, Associate General Counsel, Exchange and Geoffrey Pemble, Special Counsel, Division of Market Regulation, Commission, on December 5, 2006.

[10] 15 U.S.C. 78f(b).

[11] 15 U.S.C. 78f(b)(5).

[12] 15 U.S.C. 78s(b)(3)(A).

[13] 17 CFR 240.19b–4(f)(6).

[14] 15 U.S.C. 78s(b)(3)(A).

[15] 17 CFR 240.19b–4(f)(6).

[16] 17 CFR 240.19b–4(f)(6)(iii).

public interest. Waiver of the five-day pre-filing and 30-day operative periods will extend the Pilot, which would otherwise expire on December 7, 2006, and allow the Exchange to continue in its efforts to obtain a surveillance agreement with the Bolsa. Accordingly, the Commission designates the proposal to be effective and operative upon filing with the Commission.[17]

At any time within 60 days of the filing of the proposed rule change the Commission may summarily abrogate such rule change if it appears to the Commission that such action is necessary or appropriate in the public interest, for the protection of investors, or otherwise in the furtherance of the purposes of the Act.

IV. Solicitation of Comments

Interested persons are invited to submit written data, views, and arguments concerning the foregoing, including whether the proposed rule change is consistent with the Act. Comments may be submitted by any of the following methods:

Electronic Comments

- Use the Commission's Internet comment form (*http://www.sec.gov/rules/sro.shtml*); or
- Send an e-mail to *rule-comments@sec.gov*. Please include File Number SR–CBOE–2006–103 on the subject line.

Paper Comments

- Send paper comments in triplicate to Nancy M. Morris, Secretary, Securities and Exchange Commission, 100 F Street, NE., Washington, DC 20549–1090.

All submissions should refer to File Number SR–CBOE–2006–103. This file number should be included on the subject line if e-mail is used. To help the Commission process and review your comments more efficiently, please use only one method. The Commission will post all comments on the Commission's Internet Web site (*http://www.sec.gov/rules/sro.shtml*). Copies of the submission, all subsequent amendments, all written statements with respect to the proposed rule change that are filed with the Commission, and all written communications relating to the proposed rule change between the Commission and any person, other than those that may be withheld from the public in accordance with the provisions of 5 U.S.C. 552, will be available for inspection and copying in the Commission's Public Reference Section, 100 F Street, NE., Washington, DC 20549–1090. Copies of such filing also will be available for inspection and copying at the principal office of the CBOE. All comments received will be posted without change; the Commission does not edit personal identifying information from submissions. You should submit only information that you wish to make available publicly. All submissions should refer to File Number SR–CBOE–2006–103 and should be submitted on or before January 3, 2007.

For the Commission, by the Division of Market Regulation, pursuant to delegated authority.[18]

Florence E. Harmon,

Deputy Secretary.

[FR Doc. E6–21173 Filed 12–12–06; 8:45 am]

BILLING CODE 8011–01–P

[17] For the purposes only of waiving the operative date of this proposal, the Commission has considered the proposed rule's impact on efficiency, competition, and capital formation. 15 U.S.C. 78c(f).

[18] 17 CFR 200.30–3(a)(12).

SECURITIES AND EXCHANGE COMMISSION

[Release No. 34–54875; File No. SR–ISE–2006–70]

Self-Regulatory Organizations; International Securities Exchange, LLC; Notice of Filing and Immediate Effectiveness of Proposed Rule Change Relating to an ISE Stock Exchange Fee Waiver

December 5, 2006.

Pursuant to Section 19(b)(1) of the Securities Exchange Act of 1934 (''Act'')[1] and Rule 19b–4 thereunder,[2] notice is hereby given that on November 30, 2006, the International Securities Exchange, LLC (''ISE'' or ''Exchange'') filed with the Securities and Exchange Commission (''Commission'') the proposed rule change as described in Items I, II, and III below, which Items have been prepared by the Exchange. The Exchange has designated this proposal as one establishing or changing a due, fee, or other charge imposed by a self-regulatory organization pursuant to Section 19(b)(3)(A) of the Act,[3] and Rule 19b–4(f)(2) thereunder,[4] which renders the proposal effective upon filing with the Commission. The Commission is publishing this notice to solicit comments on the proposed rule change from interested persons.

[1] 15 U.S.C. 78s(b)(1).

[2] 17 CFR 240.19b–4.

[3] 15 U.S.C. 78s(b)(3)(A).

[4] 17 CFR 240.19b–4(f)(2).

I. Self-Regulatory Organization's Statement of the Terms of Substance of the Proposed Rule Change

The Exchange is proposing to amend its Schedule of Fees to extend a fee waiver related to the ISE Stock Exchange. The text of the proposed rule change is available on the Exchange's Web site, *http://www.iseoptions.com*, at the Exchange's Office of the Secretary, and at the Commission's Public Reference Room.

II. Self-Regulatory Organization's Statement of the Purpose of, and Statutory Basis for, the Proposed Rule Change

In its filing with the Commission, the Exchange included statements concerning the purpose of and basis for the proposed rule change and discussed any comments it received on the proposal. The text of these statements may be examined at the places specified in Item IV below. The Exchange has prepared summaries, set forth in sections A, B, and C below, of the most significant aspects of such statements.

A. Self-Regulatory Organization's Statement of the Purpose of, and the Statutory Basis for, the Proposed Rule Change

1. Purpose

The purpose of this proposed rule change is to extend a fee waiver related to the trading of equity securities on the ISE Stock Exchange (''ISE Stock''), a facility of the Exchange. The Exchange currently waives all execution fees in an effort to promote trading on ISE Stock.[5] The fee waiver is scheduled to expire on December 1, 2006. In an effort to continue the promotion of ISE Stock, the Exchange proposes to extend the waiver of all execution fees until March 1, 2007.

2. Statutory Basis

The Exchange believes that the proposed rule change furthers the objectives of Section 6(b)(4) of the Act,[6] in that it is an equitable allocation of reasonable dues, fees, and other charges among its members and other persons using its facilities.

B. Self-Regulatory Organization's Statement on Burden on Competition

The Exchange believes that the proposed rule change would impose no burden on competition that is not necessary or appropriate in furtherance of the purposes of the Act.

[5] *See* Securities Exchange Act Release No. 54561 (October 2, 2006), 71 FR 59844 (October 11, 2006) (SR–ISE–2006–54).

[6] 15 U.S.C. 78f(b)(4).

C. Self-Regulatory Organization's Statement on Comments on the Proposed Rule Change Received From Members, Participants or Others

The Exchange did not solicit or receive any written comments with respect to the proposal.

III. Date of Effectiveness of the Proposed Rule Change and Timing for Commission Action

The foregoing proposed rule change has been designated as a fee change pursuant to Section 19(b)(3)(A)(ii) of the Act [7] and Rule 19b–4(f)(2) [8] thereunder. Accordingly, the proposal is effective upon filing with the Commission. At any time within 60 days of the filing of the proposed rule change, the Commission may summarily abrogate such rule change if it appears to the Commission that such action is necessary or appropriate in the public interest, for the protection of investors, or otherwise in furtherance of the purposes of the Act.

IV. Solicitation of Comments

Interested persons are invited to submit written data, views, and arguments concerning the foregoing, including whether the proposed rule change is consistent with the Act. Comments may be submitted by any of the following methods:

Electronic Comments

- Use the Commission's Internet comment form (*http://www.sec.gov/rules/sro.shtml*); or
- Send an e-mail to *rule-comments@sec.gov*. Please include File Number SR–ISE–2006–70 on the subject line.

Paper Comments

- Send paper comments in triplicate to Nancy M. Morris, Secretary, Securities and Exchange Commission, Station Place, 100 F Street NE., Washington, DC 20549–1090.

All submissions should refer to File Number SR–ISE–2006–70. This file number should be included on the subject line if e-mail is used. To help the Commission process and review your comments more efficiently, please use only one method. The Commission will post all comments on the Commission's Internet Web site (*http://www.sec.gov/rules/sro.shtml*). Copies of the submission, all subsequent amendments, all written statements with respect to the proposed rule change that are filed with the Commission, and all written communications relating to the proposed rule change between the Commission and any person, other than those that may be withheld from the public in accordance with the provisions of 5 U.S.C. 552, will be available for inspection and copying in the Commission's Public Reference Room. Copies of such filing also will be available for inspection and copying at the principal office of the Exchange. All comments received will be posted without change; the Commission does not edit personal identifying information from submissions. You should submit only information that you wish to make available publicly. All submissions should refer to File Number SR–ISE–2006–70 and should be submitted on or before January 3, 2007.

For the Commission, by the Division of Market Regulation, pursuant to delegated authority.[9]

Florence E. Harmon,

Deputy Secretary.

[FR Doc. E6–21165 Filed 12–12–06; 8:45 am]

BILLING CODE 8011–01–P

[7] 15 U.S.C. 78s(b)(3)(A)(ii).

[8] 17 CFR 240.19b–4(f)(2).

[9] 17 CFR 200.30–3(a)(12).

SECURITIES AND EXCHANGE COMMISSION

[Release No. 34–54871; File No. SR–NASD–2006–124]

Self-Regulatory Organizations; National Association of Securities Dealers, Inc.; Notice of Filing of Proposed Rule Change Relating to Proposed Rule 2342 Requiring Members To Provide New Customers, and All Customers Annually, Specific Information About the Securities Investor Protection Corporation (''SIPC'')

December 5, 2006.

Pursuant to Section 19(b)(1) of the Securities Exchange Act of 1934 (''Act'') [1] and Rule 19b–4 thereunder,[2] notice is hereby given that on November 9, 2006, the National Association of Securities Dealers, Inc. (''NASD'') filed with the Securities and Exchange Commission (''SEC'' or ''Commission'') the proposed rule change as described in Items I, II, and III below, which Items have been prepared by NASD. The Commission is publishing this notice to solicit comments on the proposed rule change from interested persons.

[1] 15 U.S.C. 78s(b)(1).

[2] 17 CFR 240.19b–4.

I. Self-Regulatory Organization's Statement of the Terms of Substance of the Proposed Rule Change

NASD is proposing Rule 2342, which would require members to advise all new customers in writing at the opening of an account, and advise all customers in writing at least once each year, that they may obtain information about SIPC, including the SIPC Brochure,[3] by contacting SIPC. Members would also provide customers with SIPC's telephone number and Web site address at those times. Below is the text of the proposed rule change. Proposed new language is in *italics*.

* * * * *

2000. Business Conduct

* * * * *

2300. Transactions with Customers

* * * * *

2342. SIPC Information

Members shall advise all new customers, in writing, at the opening of an account, that they may obtain information about the Securities Investor Protection Corporation (SIPC), including the SIPC Brochure, by contacting SIPC, and also shall provide the Web site address and telephone number of SIPC. In addition, members shall provide all customers with the same information, in writing, at least once each year. In cases where both an introducing firm and clearing firm service an account, the firms may assign these requirements to one of the firms.

* * * * *

II. Self-Regulatory Organization's Statement of the Purpose of, and Statutory Basis for, the Proposed Rule Change

In its filing with the Commission, NASD included statements concerning the purpose of and basis for the proposed rule change and discussed any comments it received on the proposed rule change. The text of these statements may be examined at the places specified in Item IV below. NASD has prepared summaries, set forth in sections A, B, and C below, of the most significant aspects of such statements.

[3] In brief, the SIPC Brochure describes such things as the role of SIPC, what SIPC covers and what it does not, and how to avoid investment fraud.

A. Self-Regulatory Organization's Statement of the Purpose of, and Statutory Basis for, the Proposed Rule Change

1. Purpose

In May 2001, the U.S. General Accounting Office (''GAO'')[4] issued a report in which the GAO made recommendations to the SEC and SIPC about ways to improve the information available to the public about SIPC and the Securities Investor Protection Act (''SIPA'').[5] Among other things, the GAO recommended that self-regulatory organizations (''SROs'') explore ways to encourage broader dissemination of the SIPC Brochure to customers so that they can become more aware of the scope of coverage of the SIPA.[6]

In response, NASD is proposing Rule 2342, which would require members to advise all new customers, in writing, at the opening of an account, that they may obtain information about SIPC, including the SIPC Brochure, by contacting SIPC, and to provide SIPC's Web site address and telephone number. In addition, proposed Rule 2342 would require members to provide all customers with the same information, in writing, at least once each year. In cases where both an introducing firm and clearing firm service an account, the firms could assign these requirements to one of the firms.

NASD is proposing an effective date of May 31, 2007, and states that it will announce this effective date for the proposed rule change in a *Notice to Members* to be published no later than 30 days following Commission approval. According to NASD, this will give members time to make necessary changes to their customer documentation and systems.

2. Statutory Basis

NASD believes that the proposed rule change is consistent with the provisions of Section 15A(b)(6) of the Act,[7] which provides, among other things, that NASD rules must be designed to prevent fraudulent and manipulative acts and practices, to promote just and equitable principles of trade, and, in general, to protect investors and the public interest. NASD believes that the proposed rule change is consistent with this provision of the Act because NASD members will be required to provide new customers with SIPC's telephone number and Web site address and to provide that same information to all customers, annually. This new requirement will further assist investors in obtaining information that will help them to understand SIPC and how SIPC protects investors.

B. Self-Regulatory Organization's Statement on Burden on Competition

NASD does not believe that the proposed rule change will result in any burden on competition that is not necessary or appropriate in furtherance of the purposes of the Act.

C. Self-Regulatory Organization's Statement on Comments on the Proposed Rule Change Received From Members, Participants, or Others

Written comments were neither solicited nor received.

III. Date of Effectiveness of the Proposed Rule Change and Timing for Commission Action

Within 35 days of the date of publication of this notice in the **Federal Register** or within such longer period (i) As the Commission may designate up to 90 days of such date if it finds such longer period to be appropriate and publishes its reasons for so finding or (ii) as to which the self-regulatory organization consents, the Commission will:

(A) By order approve such proposed rule change, or

(B) Institute proceedings to determine whether the proposed rule change should be disapproved.

IV. Solicitation of Comments

Interested persons are invited to submit written data, views and arguments concerning the foregoing, including whether the proposed rule change is consistent with the Act. Comments may be submitted by any of the following methods:

Electronic Comments

Use the Commission's Internet comment form (*http://www.sec.gov/rules/sro.shtml*); or

- Send an e-mail to *rule-comments@sec.gov.* Please include File Number SR–NASD–2006–124 on the subject line.

Paper Comments

- Send paper comments in triplicate to Nancy M. Morris, Secretary, Securities and Exchange Commission, 100 F Street, NE., Washington, DC 20549–1090.

All submissions should refer to File Number SR–NASD–2006–124. This file number should be included on the subject line if e-mail is used. To help the Commission process and review your comments more efficiently, please use only one method. The Commission will post all comments on the Commission's Internet Web site (*http://www.sec.gov/rules/sro.shtml*). Copies of the submission, all subsequent amendments, all written statements with respect to the proposed rule change that are filed with the Commission, and all written communications relating to the proposed rule change between the Commission and any person, other than those that may be withheld from the public in accordance with the provisions of 5 U.S.C. 552, will be available for inspection and copying in the Commission's Public Reference Room, 100 F Street, NE., Washington, DC 20549. Copies of such filing also will be available for inspection and copying at the principal office of NASD. All comments received will be posted without change; the Commission does not edit personal identifying information from submissions. You should submit only information that you wish to make available publicly. All submissions should refer to the File Number SR–NASD–2006–124 and should be submitted on or before January 3, 2007.

For the Commission, by the Division of Market Regulation, pursuant to delegated authority.[8]

Florence E. Harmon,

Deputy Secretary.

[FR Doc. E6–21170 Filed 12–12–06; 8:45 am]

BILLING CODE 8011–01–P

[4] The GAO has since been renamed the Government Accountability Office.

[5] GAO, *Securities Investor Protection: Steps Needed to Better Disclose SIPC Policies to Investors*, GAO–01–653 (May 25, 2001). In July 2003, the GAO noted that the Commission was working with SROs to explore ways in which the GAO's recommendations could be implemented. *See* GAO, *Securities Investor Protection: Update on Matters Related to the Securities Investor Protection Corporation*, GAO–03–811 (July 11, 2003).

[6] In its report, the GAO also recommended that SROs consider requiring firms to include information on periodic statements or trade confirmations advising investors that they should document account discrepancies in writing. In response to this recommendation, NASD amended Rule 2340 to require that account statements include a statement advising each customer to report promptly any inaccuracy or discrepancy in that person's account to his or her brokerage firm and clearing firm (where these are different firms). Such statement also must advise the customer that any oral communication should be re-confirmed in writing to further protect the customer's rights, including rights under SIPA. *See* Securities Exchange Act Rel. No. 54411 (September 7, 2006) 71 FR 54105 (September 13, 2006) (SR–NASD–2004–171), as corrected by Securities Exchange Act Rel. No. 54411A (October 6, 2006) 71 FR 61115 (October 17, 2006).

[7] 15 U.S.C. 78o–3(b)(6).

[8] 17 CFR 200.30–3(a)(12).

SECURITIES AND EXCHANGE COMMISSION

[Release No. 34–54887; File No. SR–NYSE–2006–103]

Self-Regulatory Organizations; New York Stock Exchange LLC; Notice of Filing and Immediate Effectiveness of Proposed Rule Change Relating to an Amendment to the Earnings Standard Included in the Exchange's Financial Listing Criteria

December 6, 2006.

Pursuant to Section 19(b)(1) of the Securities Exchange Act of 1934 (''Act'')[1] and Rule 19b–4 thereunder,[2] notice is hereby given that on November 30, 2006, the New York Stock Exchange LLC (''NYSE'' or ''Exchange''), filed with the Securities and Exchange Commission (''Commission'') the proposed rule change as described in Items I and II below, which Items have been substantially prepared by the Exchange. NYSE has filed this proposal pursuant to Section 19(b)(3)(A) of the Act[3] and Rule 19b–4(f)(6) thereunder,[4] which renders the proposal effective upon filing with the Commission. The Commission is publishing this notice to solicit comments on the proposed rule change from interested persons.

I. Self-Regulatory Organization's Statement of the Terms of Substance of the Proposed Rule Change

NYSE proposes to include an alternative method for meeting the earnings standard alternative in its domestic financial listing standards for companies proposing to list on the Exchange contained in Section 102.01C of the Exchange's Listed Company Manual (the ''Manual'').

The text of the proposed rule change is available on the Exchange's Web site (*http://www.nyse.com*), at the Exchange's Office of the Secretary, and at the Commission's Public Reference Room.

II. Self-Regulatory Organization's Statement of the Purpose of, and Statutory Basis for, the Proposed Rule Change

In its filing with the Commission, the Exchange included statements concerning the purpose of and basis for the proposed rule change and discussed any comments it received on the proposed rule change. The text of these statements may be examined at the places specified in Item IV below. NYSE has prepared summaries, set forth in Sections A, B, and C below, of the most significant aspects of such statements.

A. Self-Regulatory Organization's Statement of the Purpose of, and Statutory Basis for, the Proposed Rule Change

1. Purpose

The Exchange proposes to include an alternative method for meeting the earnings standard alternative in its domestic financial listing standards for companies proposing to list on the Exchange contained in Section 102.01C of the Exchange's Manual.

Section 102.01C of the Manual allows companies to list under the Exchange's domestic listing criteria by meeting one of three alternative standards. The earnings standard allows a company to list if it has pre-tax earnings from continuing operations and after minority interest, amortization and equity in the earnings or losses of investees, adjusted for certain specified items, totaling at least $10,000,000 in the aggregate for the last three fiscal years together with a minimum of $2,000,000 in each of the two most recent fiscal years, and positive amounts in all three years. Under certain circumstances, the Exchange may qualify a company based on the most recent completed nine months in lieu of the earliest fiscal year otherwise required by the applicable standard, in circumstances where a recapitalization transaction or significant change in operations has rendered irrelevant the financial position of the company in that third year back and the company would meet the requirements of Section 102.01C based on the most recent nine months and the two immediately preceding fiscal years.

The proposed amendment would amend the earnings standard to provide an alternative to the existing requirements. The alternative earnings standard would require total earnings over the three fiscal year period of $12,000,000, with at least $5,000,000 in earnings in the most recently completed fiscal year. The requirement of $2,000,000 in earnings in the middle year would be retained, but the requirement that the company have a positive amount in the earliest fiscal year in the period would be eliminated. The Exchange is proposing to allow companies listing under the proposed alternative earnings standard to use the most recent nine fiscal months instead of the earliest fiscal year, in the limited circumstances in which that approach is permitted under the current earnings test.[5] If a company that listed on the basis of its most recent nine fiscal months does not actually meet the alternative earnings standard upon completion of the full fiscal year and does not at that time meet any of the other initial listing standard options, the Exchange will commence immediate delisting proceedings with respect to that company without the benefit of any of the cure provisions normally available to companies that are below continued listing standards. The amended rule text will also clarify that companies listing under any of the Exchange's financial standards using their most recent nine fiscal months will also be subject to delisting as set forth in the foregoing sentence. Section 802.01B of the Manual is also being amended to include an identical provision.

The proposed amendment would allow the Exchange to list financially sound companies with substantial earnings that would be able to list under the current earnings standard but for losses in the earliest fiscal year of the three-year period. Frequently, that earliest year is unrepresentative of the current financial position of the company, as, for example, it has significantly changed its business model, was in a start-up phase of its development at that time, or has since undergone a recapitalization. The Exchange believes that the proposed alternative earnings standard is as stringent as the existing standard, as it requires $12,000,000 in total earnings over the measurement period rather than the $10,000,000 of the current standard and it requires $5,000,000 in earnings in the most recent fiscal year rather than the $2,000,000 required by the current standard. The Exchange believes that achieving these higher earnings requirements would be at least as good an indication of financial health as is the current earnings standard, even if a company had losses in the furthest back year of the period.

The Exchange believes that its proposed alternative earnings standard is at least as stringent as a standard the Commission has approved previously for another self-regulatory agency. Specifically, the Nasdaq Global Market's Standard Three (''Standard Three'') does not require any demonstration of historical earnings. Standard Three requires $20 million in market value of publicly-held shares, while the Exchange's standards require $60 million in market value of publicly-held shares in connection with initial public offerings or spin-offs and $100 million

[1] 15 U.S.C. 78s(b)(1).

[2] 17 CFR 240.19b–4.

[3] 15 U.S.C. 78s(b)(3)(A).

[4] 17 CFR 240.19b–4(f)(6).

[5] *See* Manual Section 102.01C.

for all other companies. A company can list under Standard Three by meeting only one other requirement: a market value of listed securities of $75 million. The Exchange believes that a company that meets its own $60 million in market value of publicly-held shares requirement would most likely also meet Standard Three's market value of listed securities test, as the Exchange requirement does not reflect the ownership interests of officers, directors and holders of more than 10% of the company's stock. The Exchange believes that even without considering its earnings requirements, the proposed alternate earnings standard is as stringent as Standard Three. When the earnings requirement, which is absent from Standard Three is included in the analysis, the proposed Exchange standard is clearly superior.

2. Statutory Basis

The Exchange believes that the proposed rule change is consistent with the requirements of Section 6(b) [6] of the Act, in general, and Section 6(b)(5) [7] of the Act, in particular, in that it is designed to prevent fraudulent and manipulative acts and practices, to promote just and equitable principles of trade, to remove impediments to, and perfect the mechanism of a free and open market and, in general, to protect investors and the public interest.

B. Self-Regulatory Organization's Statement on Burden on Competition

The Exchange does not believe that the proposed rule change will impose any burden on competition that is not necessary or appropriate in furtherance of the purposes of the Act.

C. Self-Regulatory Organization's Statement on Comments on the Proposed Rule Change Received From Members, Participants or Others

Written comments were neither solicited nor received.

III. Date of Effectiveness of the Proposed Rule Change and Timing for Commission Action

Because the proposed rule change: (1) Does not significantly affect the protection of investors or the public interest; (2) does not impose any significant burden on competition; and (3) does not become operative for 30 days after the date of the filing, or such shorter time as the Commission may designate if consistent with the protection of investors and the public interest, the proposed rule change has become effective pursuant to Section 19(b)(3)(A) of the Act [8] and Rule 19b–4(f)(6) thereunder.[9]

The Exchange has asked the Commission to waive the 30-day operative delay specified in Rule 19b–4(f)(6)(iii).[10] The Exchange asserts that the proposed amendment implements a listing standard that is at least as stringent as a listing standard of another self-regulatory organization previously approved by the Commission. In addition, the Exchange believes that the proposed alternative does not weaken the requirements of its earnings standard as, while a company would now be able to meet the test even if it had incurred a loss in the earliest year of the period, the aggregate earnings requirement for the whole period and the requirement for the most recent year of the period have been significantly increased.

The Commission hereby grants the request to waive the 30-day operative delay.[11] As the NYSE states, the increase in the aggregate earnings requirement for the whole period and the increase in the requirement for the most recent year of the period should help ensure that financially sound companies are listed on the Exchange. In addition, the proposal furthers the public interest by providing that the Exchange will immediately delist, without the benefit of any of its normally available cure provisions,[12] a company listed on the Exchange on the basis of such company's most recently completed nine months,[13] when that company does not subsequently meet the alternative standard upon completion of the full fiscal year and does not meet any of the other initial listing standard options. Based on these facts, and that it appears that the proposed listing requirement is at least as stringent as a listing standard previously approved by the Commission for another market, the Commission believes that waiving the 30 day operative delay is consistent with the protection of investors and the public interest.

At any time within 60 days of the filing of the proposed rule change, the Commission may summarily abrogate such rule change if it appears to the Commission that such action is necessary or appropriate in the public interest, for the protection of investors, or otherwise in furtherance of the purposes of the Act.

IV. Solicitation of Comments

Interested persons are invited to submit written data, views and arguments concerning the foregoing, including whether the proposed rule change is consistent with the Act. Comments may be submitted by any of the following methods:

Electronic Comments

- Use the Commission's Internet comment form (*http://www.sec.gov/rules/sro.shtml*); or
- Send e-mail to *rule-comments@sec.gov*. Please include File Number SR–NYSE–2006–103 on the subject line.

Paper Comments

- Send paper comments in triplicate to Nancy M. Morris, Secretary, Securities and Exchange Commission, 100 F Street NE., Washington, DC 20549–1090.

All submissions should refer to File Number SR–NYSE–2006–103. This file number should be included on the subject line if e-mail is used. To help the Commission process and review your comments more efficiently, please use only one method. The Commission will post all comments on the Commission's Internet Web site (*http://www.sec.gov/rules/sro/shtml*). Copies of the submission, all subsequent amendments, all written statements with respect to the proposed rule change that are filed with the Commission, and all written communications relating to the proposed rule change between the Commission and any person, other than those that may be withheld from the public in accordance with the provisions of 5 U.S.C. 552, will be available for inspection and copying in the Commission's Public Reference Room. Copies of such filing will also be available for inspection and copying at the principal office of the NYSE. All comments received will be posted

[6] 15 U.S.C. 78(f)(b).

[7] 15 U.S.C. 78(f)(b)(5).

[8] 15 U.S.C. 78s(b)(3)(A).

[9] 17 CFR 240.19b–4(f)(6). As required by Rule 19b–4(f)(6)(iii) under the Act, the Exchange also provided with the Commission with written notice of its intent to file the proposed rule change, along with a brief description and text of the proposed rule change, at least five business days prior to the date of the proposed rule change.

[10] 17 CFR 240.19b–4(f)(6)(iii).

[11] For purposes only of waiving the 30-day operative delay, the Commission has considered the proposed rule's impact on efficiency, competition, and capital formation. *See* 15 U.S.C. 78c(f).

[12] *See* Manual Sections 802.02 and 802.03.

[13] Section 102.01C of the Manual provides that financial statements covering a period of nine to twelve months shall satisfy the requirement for the most recent fiscal year in cases where the applicant has changed its fiscal year or where there has been a significant change in the company's operations or capital structure. In these cases, the Exchange must conclude that the Company can reasonably be expected to qualify under the regular standard upon completion of its then current fiscal year in lieu of the earliest fiscal year otherwise required by the applicable standard. *See* Manual Section 102.01C.

without change; the Commission does not edit personal identifying information from submissions. You should submit only information that you wish to make available publicly. All submissions should refer to File Number SR–NYSE–2006–103 and should be submitted on or before January 3, 2007.

For the Commission, by the Division of Market Regulation, pursuant to delegated authority.[14]

Florence E. Harmon,

Deputy Secretary.

[FR Doc. E6–21162 Filed 12–12–06; 8:45 am]

BILLING CODE 8011–01–P

SECURITIES AND EXCHANGE COMMISSION

[Release No. 34–54869; File No. SR–NYSEArca–2006–70]

Self-Regulatory Organizations; NYSE Arca, Inc.; Order Approving a Proposed Rule Change To Extend the Term of Index-Linked Securities

December 4, 2006.

On October 2, 2006, the NYSE Arca, Inc. (''Exchange), through its wholly-owned subsidiary NYSE Arca Equities, Inc. (''NYSE Arca Equities''), filed with the Securities and Exchange Commission (''Commission''), pursuant to Section 19(b)(1) of the Securities Exchange Act of 1934 (''Act'') [1] and Rule 19b–4 thereunder,[2] a proposed rule change to amend NYSE Arca Equities Rule 5.2(j)(6) to extend the maximum duration of index-linked securities (''Index-Linked Securities'') from ten years to thirty years.[3] The proposed rule change was published for comment in the **Federal Register** on October 27, 2006.[4] The Commission received no comment letters on the proposal.

NYSE Arca Equities Rule 5.2(j)(6) sets forth criteria that the issue and the issuer must meet in order to list and trade Index-Linked Securities at the Exchange.[5] Currently, one of the criteria the Exchange considers for the listing and trading of Index-Linked Securities, pursuant to NYSE Arca Equities Rule 5.2(j)(6), is that the term of the issue must be a minimum term of one year but not greater than ten years. Proposed NYSE Arca Equities Rule 5.2(j)(6)(b) would extend the duration of the term of the issue from ten years to thirty years.

The Commission finds that the proposed rule change is consistent with the requirements of the Act and the rules and regulations thereunder applicable to a national securities exchange.[6] In particular, the Commission finds that the proposed rule change is consistent with Section 6(b)(5) of the Act,[7] which requires, among other things, that Exchange rules be designed to prevent fraudulent and manipulative acts and practices, to promote just and equitable principles of trade, to foster cooperation and coordination with persons engaged in facilitating transactions in securities, and to remove impediments to and perfect the mechanism of a free and open market and a national market system. Amending NYSE Arca Equities Rule 5.2(j)(6) should provide the Exchange with more flexibility in responding to the increased demand from issuers to list and trade Index-Linked Securities that are greater than ten years in duration. The Commission notes that corporate bonds and other fixed-income products historically have been issued with terms of up to, or greater than, thirty years.[8] In addition, the Commission has approved amendments to the generic listing standards for equity-linked notes that removed the maximum term limits for those securities.[9]

It is therefore ordered, pursuant to Section 19(b)(2) of the Act,[10] that the proposed rule change (SR–NYSEArca–2006–70) be, and hereby is, approved.

For the Commission, by the Division of Market Regulation, pursuant to delegated authority.[11]

Florence E. Harmon,

Deputy Secretary.

[FR Doc. E6–21164 Filed 12–12–06; 8:45 am]

BILLING CODE 8011–01–P

[14] 17 CFR 200.30–3(a)(12).

[1] 15 U.S.C. 78s(b)(1).

[2] 17 CFR 240.19b–4.

[3] NYSE Arca Equities Rule 5.2(j)(6) provides for the listing and trading of Index-Linked Securities pursuant to Rule 19b–4(e) under the Act (the ''generic listing standards'').

[4] *See* Securities Exchange Act Release No. 54636 (October 20, 2006), 71 FR 63060.

[5] The Exchange may submit a proposed rule change pursuant to Section 19(b)(2) of the Act to allow the listing and trading of Index-Linked Securities that do not otherwise meet the generic listing criteria set forth in NYSE Arca Equities Rule 5.2(j)(6).

[6] In approving the proposed rule change, the Commission notes that it has considered the proposed rule's impact on efficiency, competition and capital formation. 15 U.S.C. 78c(f).

[7] 15 U.S.C. 78f(b)(5).

[8] *See also* NYSE Arca Equities Rule 5.2(e) setting forth the standards for listing debt securities.

[9] *See* Securities Exchange Act Release No. 42110 (November 5, 1999), 64 FR 61677 (November 12, 1999) (SR–Amex–99–33); 41992 (October 7, 1999), 64 FR 56007 (October 15, 1999) (SR–NYSE–99–22); 42313 (January 4, 2000), 65 FR 2205 (January 13, 2000) (SR–CHX–99–19).

[10] 15 U.S.C. 78f(b)(5).

[11] 17 CFR 200.30–3(a)(12).

SECURITIES AND EXCHANGE COMMISSION

[Release No. 34–54880; File No. SR–OCC–2006–12]

Self-Regulatory Organizations; The Options Clearing Corporation; Order Approving a Proposed Rule Change Relating to an Escrow Program Fee To Be Charged to Escrow Banks

December 6, 2006.

On July 12, 2006, The Options Clearing Corporation (''OCC'') filed with the Securities and Exchange Commission the proposed rule change pursuant to Section 19(b)(1) of the Securities Exchange Act of 1934 (''Act'').[1] Notice of the proposal was published in the **Federal Register** on October 13, 2006.[2] No comment letters were received. For the reasons discussed below, the Commission is approving the proposed rule change.

I. Description

The proposed rule change will amend OCC's Schedule of Fees by adding a $200 escrow fee to be charged to OCC-approved banks.

As background, OCC's escrow deposit program allows a custodian bank that has entered into an escrow agreement with OCC (''escrow bank'') to make deposits of eligible collateral on behalf of its customers with respect to stock option contracts and index option contracts carried in short positions and to rollover and withdraw such deposits by submitting electronic instructions to OCC through OCC's escrow deposit system.[3] Escrow deposits are pledged to the customer's clearing member in order to satisfy the customer's obligation to deposit customer level margin at the clearing member and are pledged to OCC in order to satisfy the clearing member's obligation to deposit clearing level margin at OCC with respect to a specified short position in stock or index options.[4] Under OCC's form of escrow agreement, an escrow bank is obligated to hold the deposited collateral subject to the lien of OCC and the clearing member until such liens are released.

In 2005, the escrow deposit system was integrated into OCC's clearing

[1] 15 U.S.C. 78s(b)(1).

[2] Securities Exchange Act Release No. 54572 (Oct. 4, 2006), 71 FR 50599.

[3] Escrow banks also use the escrow deposit system to receive and review OCC and relevant clearing member responses and to access reports.

[4] Escrow deposits may include: (i) The underlying securities for any stock option contract; (ii) cash, short-term U.S. Government securities, and/or common stocks for any index call option contract; and (iii) cash and/or short-term U.S Government securities for stock or index put options.

system, which enabled escrow banks to access the escrow system through the Internet. Before the integration, escrow banks were required to lease or buy a personal computer that was configured by OCC to provide secure access to the escrow deposit system. Banks that elected the lease alternative are currently charged a $200 monthly fee of which $150 is an equipment leasing fee and $50 is an access fee.[5] Banks that (i) Elected the purchase alternative or (ii) became escrow banks after the systems integration are currently charged only the $50 access fee, which is intended to cover the costs associated with administering the escrow deposit program. Costs to administer the program include: (1) Legal costs related to addressing the contractual aspects of the program; (2) audit costs related to ensuring compliance with the external audit reporting requirements of the program; and (3) staff costs related to servicing program users (*i.e.*, escrow banks and clearing members).

In connection with reviewing different back-up solutions to internet access, OCC also examined its costs to administer the escrow program and concluded that the costs greatly exceed the $50 per month access fee. Accordingly, OCC has determined to charge all escrow banks a $200 per month escrow program fee, which will be reflected in OCC's Schedule of Fees. The escrow program fee will allow OCC to partially offset its escrow program administration costs but will not affect the overwhelming majority of escrow banks because the majority of escrow banks already pay $200 per month in aggregate escrow deposit program fees.

II. Discussion

Section 17A(b)(3)(D) of the Act[6] requires the rules of a registered clearing agency to provide for the equitable allocation of reasonable dues, fees, and other charges among its participants. The Commission finds that OCC's proposed amendment to its Schedule of Fees is consistent with this requirement because the $200 per month program fee reflects OCC's cost to administer the escrow program with respect to escrow banks accessing the program.

III. Conclusion

On the basis of the foregoing, the Commission finds that the proposal is consistent with the requirements of the Act and in particular with the requirements of Section 17A of the Act[7] and the rules and regulations thereunder.

It is therefore ordered, pursuant to Section 19(b)(2) of the Act, that the proposed rule change (File No. SR–OCC–2006–12) be, and hereby is, approved.[8]

For the Commission by the Division of Market Regulation, pursuant to delegated authority.[9]

Florence E. Harmon,

Deputy Secretary.

[FR Doc. E6–21163 Filed 12–12–06; 8:45 am]

BILLING CODE 8011–01–P

[5] OCC has continued to charge current escrow banks with leased equipment the $200 per month total fee as they have retained such equipment as a back-up to Internet access to the escrow system. However, a different back-up solution is being implemented for all escrow banks, which is rendering the leased equipment obsolete for purposes of accessing the escrow system.

[6] 15 U.S.C. 78q–1(b)(3)(D).

[7] 15 U.S.C. 78q–1.

[8] In approving the proposed rule change, the Commission considered the proposal's impact on efficiency, competition and capital formation. 15 U.S.C. 78c(f).

[9] 17 CFR 200.30–3(a)(12).

SECURITIES AND EXCHANGE COMMISSION

[Release No. 34–54890; File No. SR–Phlx–2006–59]

Self-Regulatory Organizations; Philadelphia Stock Exchange, Inc.; Notice of Filing of Proposed Rule Change and Amendments No. 1 and 2 Thereto Relating to an Amendment to a Philadelphia Board of Trade Market Data Distribution Network Fee

December 7, 2006.

Pursuant to Section 19(b)(1) of the Securities Exchange Act of 1934 (''Act''),[1] and Rule 19b–4 thereunder,[2] notice is hereby given that on September 26, 2006, the Philadelphia Stock Exchange, Inc. (''Phlx'' or ''Exchange'') filed with the Securities and Exchange Commission (''Commission'') the proposed rule change as described in Items I, II, and III below, which Items have been prepared by the Phlx. The Phlx filed Amendment No. 1 to the proposed rule change on November 1, 2006.[3] The Phlx filed Amendment No. 2 to the proposed rule change on December 6, 2006.[4] The Commission is publishing this notice to solicit comments on the proposed rule change, as amended, from interested persons.

[1] 15 U.S.C. 78s(b)(1).

[2] 17 CFR 240.19b–4.

[3] Amendment No. 1 replaces and supersedes the original filing in its entirety.

[4] Amendment No. 2 clarified that the chart in this filing reflects Phlx's proposed change to thefee per snapshot request; the current fee per snapshot request is $0.00025; and the 15% Administrative Fee is a credit to vendors which provide market data to 200,000 or more Devices in any month.

I. Self-Regulatory Organization's Statement of the Terms of Substance of the Proposed Rule Change

The Phlx proposes to change a fee assessed by the Exchange's wholly owned subsidiary, the Philadelphia Board of Trade (''PBOT''), on market data vendors for certain index values that subscribers receive over PBOT's Market Data Distribution Network (''MDDN''). The text of the proposed rule change is available on Phlx's Web site at *http://www.phlx.com*, at Phlx's principal office, and at the Commission's Public Reference Room.

II. Self-Regulatory Organization's Statement of the Purpose of, and Statutory Basis for, the Proposed Rule Change

In its filing with the Commission, the Phlx included statements concerning the purpose of and basis for the proposed rule change and discussed any comments it received on the proposed rule change. The text of these statements may be examined at the places specified in Item IV below. The Phlx has prepared summaries, set forth in Sections A, B, and C below, of the most significant aspects of such statements.

A. Self-Regulatory Organization's Statement of the Purpose of, and Statutory Basis for, the Proposed Rule Change

1. Purpose

The purpose of the proposed rule change is to amend one of the fees charged by the PBOT for certain market data disseminated over the MDDN.[5] The Phlx has licensed the current and closing index values underlying most of the Phlx's proprietary indexes to PBOT for the purpose of selling, reproducing, and distributing the index values over PBOT's MDDN. On each trading day, the Exchange or its third party designee objectively calculates and makes available to PBOT a real-time index value every 15 seconds and a closing index value at the end of the day. By agreement with PBOT, data vendors make the market data widely available to subscribers.[6]

On May 11, 2006, the Commission approved the Exchange's proposal to

[5] The MDDN is an internet protocol multicast network developed by PBOT and SAVVIS Communications.

[6] Approximately 65 vendors, including for example Bloomberg L.P., Telekurs Financial Information Ltd. and Thomson Financial, have already entered into such market data agreements wtih PBOT. The PBOT has contracted with one or more major Market Data Vendors to receive real-time market data and will not offer snapshot or delayed data. The fees described in this proposed rule change cover values of all the indexes disseminated over the MDDN.

allow PBOT to charge subscriber fees to vendors of market data for all the values of Phlx's proprietary indexes disseminated by PBOT's MDDN.[7] The subscriber fees are set out in agreements that PBOT executes with various market data vendors for the right to receive, store, and retransmit the current and closing index values transmitted over the MDDN. The fees approved by the Commission in its May 11, 2006 approval order included a $.00025 per request fee for ''snapshot data,'' which is essentially market data that is refreshed no more frequently than once every 60 seconds. The Exchange is now proposing to increase that fee to $.0025 per request for snapshot data.

The MDDN fees, including the fee that would be amended by this proposal, are summarized in table format below:

Fee (per month)	Real-time continuous market data	Delayed only
Per Device/User ID/ID Terminal	$1.00 per Device*	None.
Fee (per month)	Snapshot Market Data	Delayed Only.
	$0.0025 per snapshot request *[8] OR $1,500 per month for unlimited snapshot requests*.	None.

* Vendors which provide market data to 200,000 or more Devices in any month qualify for a 15% Administrative Fee credit for that month.[9]

2. Statutory Basis

The Exchange believes that its amended proposal is consistent with Section 6(b) of the Act[10] in general, and furthers the objectives of Section 6(b)(5) of the Act[11] in particular, in that it is designed to promote just and equitable principles of trade, to remove impediments to and perfect the mechanism of a free and open market and a national market system, and, in general, to protect investors and the public interest, providing a fee structure for market data recipients which is reasonable.

The Exchange also believes that its proposal furthers the objectives of Section 6(b)(4) of the Act[12] in particular, in that it is an equitable allocation of reasonable fees among persons using its facilities. The Exchange believes that PBOT's proposed fee increase is reasonable and equitable, as it reflects a more accurate valuation of the value of snapshot data to investors than the original snapshot data fee did. Phlx also believes that the fee increase to be charged by PBOT is consistent with the requirements of Commission Rule 603 (Distribution, consolidation, and display of information with respect to quotations for and transactions in NMS stocks),[13] in that it is fair and reasonable and not unreasonably discriminatory.

B. Self-Regulatory Organization's Statement on Burden on Competition

The Exchange does not believe that the proposed rule change will impose any burden on competition that is not necessary or appropriate in furtherance of the purposes of the Act.

C. Self-Regulatory Organization's Statement on Comments on the Proposed Rule Change Received From Members, Participants or Others

No written comments were either solicited or received.

III. Date of Effectiveness of the Proposed Rule Change and Timing for Commission Action

Within 35 days of the date of publication of this notice in the **Federal Register** or within such longer period (i) as the Commission may designate up to 90 days of such date if it finds such longer period to be appropriate and publishes its reasons for so finding or (ii) as to which the Exchange consents, the Commission will:

(A) By order approve such proposed rule change, or

(B) Institute proceedings to determine whether the proposed rule change should be disapproved.

IV. Solicitation of Comments

Interested persons are invited to submit written data, views, and arguments concerning the foregoing, including whether the amended proposed rule change is consistent with the Act. Comments may be submitted by any of the following methods:

Electronic Comments

- Use the Commission's Internet comment form (*http://www.sec.gov/rules/sro.shtml*); or
- Send an e-mail to *rule-comments@sec.gov*. Please include File No. SR–Phlx–2006–59 on the subject line.

Paper Comments

- Send paper comments in triplicate to Nancy M. Morris, Secretary, Securities and Exchange Commission, Station Place, 100 F Street, NE., Washington, DC 20549–1090.

All submissions should refer to File Number SR–Phlx–2006–59. This file number should be included on the subject line if e-mail is used. To help the Commission process and review your comments more efficiently, please use only one method. The Commission will post all comments on the Commission's Internet Web site (*http://www.sec.gov/rules/sro.shtml*). Copies of the submission, all subsequent amendments, all written statements with respect to the proposed rule change that are filed with the Commission, and all written communications relating to the proposed rule change between the Commission and any person, other than those that may be withheld from the public in accordance with the provisions of 5 U.S.C. 552, will be available for inspection and copying in the Commission's Public Reference Room. Copies of such filing also will be available for inspection and copying at the principal office of the Phlx. All comments received will be posted without change; the Commission does not edit personal identifying information from submissions. You

[7] *See* Securities Exchange Act Release No. 53790 (May 11, 2006), 71 FR 28738 (May 17, 2006) (approving SR–Phlx–2006–04). There are no other fees being changed by this proposed rule change.

[8] The current fee is $0.00025.

[9] All market data vendors which provide market data to 200,000 or more Devices in any month qualify for a 15% Administrative Fee credit for that month, to be deducted from the monthly Subscriber Fees that they collect and are obligated to pay PBOT under the Vendor/Subvendor Agreement.

[10] 15 U.S.C. 78f(b).

[11] 15 U.S.C. 78f(b)(5).

[12] 15 U.S.C. 78f(b)(4).

[13] 17 CFR 242.603.

should submit only information that you wish to make available publicly. All submissions should refer to File Number SR–Phlx–2006–59 and should be submitted on or before January 3, 2007.

For the Commission, by the Division of Market Regulation, pursuant to delegated authority.[14]

Florence E. Harmon,

Deputy Secretary.

[FR Doc. E6–21157 Filed 12–12–06; 8:45 am]

BILLING CODE 8011–01–P

SECURITIES AND EXCHANGE COMMISSION

[Release No. 34–54889; File No. SR–Phlx–2006–80]

Self-Regulatory Organizations; Philadelphia Stock Exchange, Inc.; Notice of Filing and Immediate Effectiveness of Proposed Rule Change Relating to the Assignment of Options Trading Privileges to Streaming Quote Traders and Remote Streaming Quote Traders

December 6, 2006.

Pursuant to Section 19(b)(1) of the Securities Exchange Act of 1934 (''Act''),[1] and Rule 19b–4 thereunder,[2] notice is hereby given that on December 5, 2006, the Philadelphia Stock Exchange, Inc. (''Phlx'' or ''Exchange'') filed with the Securities and Exchange Commission (''Commission'') the proposed rule change as described in Items I and II, below, which Items have been prepared by the Phlx. The Exchange filed the proposal as a ''non-controversial'' rule change pursuant to Section 19(b)(3)(A) of the Act[3] and Rule 19b–4(f)(6) thereunder,[4] which rendered the proposal effective upon filing with the Commission. The Commission is publishing this notice to solicit comments on the proposed rule change from interested persons.

I. Self-Regulatory Organization's Statement of the Terms of Substance of the Proposed Rule Change

The Phlx proposes to amend Phlx Rule 507,[5] which governs the assignment of options to Streaming Quote Traders (''SQTs'')[6] and Remote Streaming Quote Traders (''RSQTs''),[7] by: (i) Clarifying that all options traded on the Exchange are Streaming Quote Options;[8] (ii) deleting outdated requirements contained in paragraph (f) under Phlx Rule 507 regarding the assignment of options during the first six months of the roll-out of streaming quote technology; (iii) moving the existing text of Phlx Rule 507(a) to the first paragraph of (b) and naming paragraph (b) ''Assignment in Options;'' (iv) moving the language in 507(b)(iii) to paragraph (a) and renaming it ''Approval as an SQT and RSQT;'' and (v) applying some of the current criteria for RSQT applicants (formerly in Phlx Rule 507(b)(iii)) to SQT applicants as well.

The text of the proposed rule change is available on the Phlx's Web site, *http://www.phlx.com,* at the Phlx's principal office, and at the Commission's Public Reference Room.

II. Self-Regulatory Organization's Statement of the Purpose of, and Statutory Basis for, the Proposed Rule Change

In its filing with the Commission, the Phlx included statements concerning the purpose of and basis for the proposed rule change and discussed any comments it received on the proposed rule change. The text of these statements may be examined at the places specified in Item IV below. The Phlx has prepared summaries, set forth in Sections A, B, and C below, of the most significant aspects of such statements.

A. Self-Regulatory Organization's Statement of the Purpose of, and Statutory Basis for, the Proposed Rule Change

1. Purpose

The purpose of the proposed rule change is to update Phlx Rule 507 to reflect the current status of options trading on the Exchange.

First, the proposed amendments modify outdated concepts and requirements contained in Phlx Rule 507 by: (i) Clarifying that all options traded on the Exchange are ''Streaming Quote Options,'' and (ii) deleting obsolete requirements for the assignment of options contained in paragraph (f) of Phlx Rule 507. The Exchange's introduction of the Phlx XL technology allowed, among other things, SQTs and RSQTs to generate and submit electronic quotations. Initially, RSQTs and SQTs could only stream electronic quotations in designated options until such technology was fully rolled-out to all options, which occurred in February 2005. The Exchange is proposing to amend Phlx Rule 507 to clarify the fact that all options listed for trading on the Exchange are now ''Streaming Quote Options.''

For the same reason, the Exchange is also proposing to delete the requirements contained in paragraph (f) under Phlx Rule 507 that were applicable to member firms seeking option assignments as an RSQT or SQT during the first six months of the streaming quote roll-out. This amendment will update the Exchange's rules and remove rule text that may cause confusion.

Second, the Exchange is proposing to reorganize Phlx Rule 507(a) and (b) so that paragraph (a) covers the approval of SQTs and RSQTs as such, and paragraph (b) covers the assignment of options to SQTs and RSQTs. In order to clarify that paragraph (b) covers the assignment of specific options to SQTs and RSQTs, paragraph (b)(i) would be titled ''Assignment in Options,'' and the introductory phrase, ''When an option is to be assigned or reassigned by the Committee, the Committee will solicit applications from all eligible SQTs and RSQTs, as defined in Phlx Rule 1014(b)(ii)'' is proposed to be deleted from current paragraph (a) and inserted into paragraph (b). The Exchange believes that this should distinguish paragraph (a), which covers applications for approval of an applicant's status as an SQT or RSQT on the Exchange, from paragraph (b), which covers an SQT or RSQT's application for assignment in a particular option. Currently, the two concepts are intermingled in these paragraphs, which may be hard to follow.

Third, the Exchange proposes to extend some of the requirements applicable to RSQT applicants to SQT applicants. These requirements include significant market-making and/or specialist experience in a broad array of securities; superior resources, including capital, technology and personnel;

[14] 17 CFR 200.30–3(a)(12).

[1] 15 U.S.C. 78s(b)(1).

[2] 17 CFR 240.19b–4.

[3] 15 U.S.C. 78s(b)(3)(A).

[4] 17 CFR 240.19b–4(f)(6).

[5] Phlx Rule 507 sets forth the process by which the Committee assigns or reassigns equity options to eligible Streaming Quote Traders and Remote Streaming Quote Traders. *See* Phlx Rule 507.

[6] An SQT is an Exchange Registered Options Trader (''ROT'') who has received permission from the Exchange to generate and submit options quotations electronically through AUTOM in eligible options to which such SQT is assigned. An SQT may only submit such quotations while such SQT is physically present on the floor of the Exchange. *See* Phlx Rule 1014(b)(ii)(A).

[7] An RSQT is a ROT that is a member or member organization with no physical trading floor presence who has received permission from the Exchange to generate and submit option quotations electronically through AUTOM in eligible options to which such RSQT has been assigned. An RSQT may only submit such quotations electronically from off the floor of the Exchange. *See* Phlx Rule 1014(b)(ii)(B).

[8] A Streaming Quote Option is an option for which the Options Committee determines the SQTs may generate and submit options quotations from the Exchange floor and that RSQTs may generate and submit options quotations from off of the Exchange floor, electronically. *See* Phlx Rule 1080(k).

demonstrated history of stability, superior electronic capacity, and superior operational capacity; proven ability to interact with order flow in all types of markets; and willingness and ability to make competitive markets on the Phlx and otherwise to promote the Phlx in a manner that is likely to enhance the ability of the Phlx to compete successfully for order flow in the options it trades. The purpose of this proposal is to enable the Exchange's Option Allocation, Evaluation and Securities Committee (''OAESC'')[9] to make a more informed and efficient decision as to whether a particular SQT applicant should be assigned in an option.

SQT applicants would not be required to be willing to accept assignments as an SQT in options overlying 400 or more securities, and would not be required to show the existence of order flow commitments in order to become an SQT. RSQT applicants would continue to have such a requirement.

The Exchange believes that it is appropriate to apply these requirements to SQTs because SQT status, similar to RSQT status, entails a commitment to provide liquidity on the Exchange.

2. Statutory Basis

The Exchange believes that its proposal is consistent with Section 6(b) of the Act[10] in general, and furthers the objectives of Section 6(b)(5) of the Act[11] in particular, in that it is designed to promote just and equitable principles of trade, to remove impediments to and perfect the mechanism of a free and open market and a national market system, and, in general to protect investors and the public interest by removing outdated concepts from the Exchange's rules as well as by adopting requirements to promote the objective, efficient, and beneficial assignment of options to SQTs and RSQTs.

B. Self-Regulatory Organization's Statement on Burden on Competition

The Exchange does not believe that the proposed rule change will impose any burden on competition that is not necessary or appropriate in furtherance of the purposes of the Act.

C. Self-Regulatory Organization's Statement on Comments on the Proposed Rule Change Received From Members, Participants, or Others

No written comments were either solicited or received by the Exchange.

III. Date of Effectiveness of the Proposed Rule Change and Timing for Commission Action

Because the foregoing rule (i) does not significantly affect the protection of investors or the public interest; (ii) does not impose any significant burden on competition; and (iii) by its terms, does not become operative for 30 days from the date on which it was filed, or such shorter time as the Commission may designate if consistent with the protection of investors and the public interest, provided that the Exchange has given the Commission written notice of its intent to file the proposed rule change at least five business days prior to the date of filing of the proposed rule change or such shorter time as designated by the Commission, the proposed rule change has become effective pursuant to Section 19(b)(3)(A) of the Act[12] and Rule 19b–4(f)(6) thereunder.[13] As required under Rule 19b–4(f)(6)(iii) under the Act,[14] Phlx provided the Commission with written notice of its intent to file the proposed rule change, along with a brief description and text of the proposed rule change, prior to the date of the filing of the proposed rule change.

A proposed rule change filed under Rule 19b–4(f)(6) under the Act[15] normally may not become operative prior to 30 days after the date of filing. However, Rule 19b–4(f)(6)(iii) under the Act permits the Commission to designate a shorter time if such action is consistent with the protection of investors and the public interest.[16] The Exchange has requested that the Commission waive the 30-day operative delay, which would make the rule change effective and operative upon filing. The Commission believes that waiver of the 30-day operative delay is consistent with the protection of investors and the public interest because the proposed rule change clarifies the operation of Phlx Rule 507. Accordingly, the Commission designates the proposal to be effective and operative upon filing with the Commission.[17]

At any time within 60 days of the filing of the proposed rule change, the Commission may summarily abrogate such rule change if it appears to the Commission that such action is necessary or appropriate in the public interest, for the protection of investors, or otherwise in furtherance of the purposes of the Act.[18]

IV. Solicitation of Comments

Interested persons are invited to submit written data, views, and arguments concerning the foregoing, including whether the proposed rule change is consistent with the Act. Comments may be submitted by any of the following methods:

Electronic Comments

- Use the Commission's Internet comment form (*http://www.sec.gov/rules/sro.shtml*); or
- Send an e-mail to *rule-comments@sec.gov*. Please include File Number SR–Phlx–2006–80 on the subject line.

Paper Comments

- Send paper comments in triplicate to Nancy M. Morris, Secretary, Securities and Exchange Commission, 100 F Street, NE., Washington, DC 20549–1090.

All submissions should refer to File Number SR–Phlx–2006–80. This file number should be included on the subject line if e-mail is used. To help the Commission process and review your comments more efficiently, please use only one method. The Commission will post all comments on the Commission's Internet Web site (*http://www.sec.gov/rules/sro.shtml*). Copies of the submission, all subsequent amendments, all written statements with respect to the proposed rule change that are filed with the Commission, and all written communications relating to the proposed rule change between the Commission and any person, other than those that may be withheld from the public in accordance with the provisions of 5 U.S.C. 552, will be available for inspection and copying in the Commission's Public Reference Room. Copies of the filing also will be available for inspection and copying at the principal office of the Phlx. All comments received will be posted without change; the Commission does not edit personal identifying information from submissions. You

[9] *See* Phlx By-Law Article X, Section 10–7. The OAESC has jurisdiction over, among other things: The appointment of specialists on the options and foreign currency options trading floors; allocation, retention and transfer of privileges to deal in options on the trading floors; and administration of the 500 series of Phlx rules.

[10] 15 U.S.C. 78f(b).

[11] 15 U.S.C. 78f(b)(5).

[12] 15 U.S.C. 78s(b)(3)(A).

[13] 17 CFR 240.19b–4(f)(6).

[14] 17 CFR 240.19b–4(f)(6)(iii).

[15] 17 CFR 240.19b–4(f)(6).

[16] 17 CFR 240.19b–4(f)(6)(iii).

[17] For the purposes only of accelerating the operative date of this proposal, the Commission has considered the proposed rule's impact on efficiency, competition, and capital formation. 15 U.S.C. 78c(f).

[18] *See* 15 U.S.C. 78s(b)(3)(C).

should submit only information that you wish to make available publicly. All submissions should refer to File Number SR–Phlx–2006–80 and should be submitted on or before January 3, 2007.

For the Commission, by the Division of Market Regulation, pursuant to delegated authority.[19]

Florence E. Harmon,

Deputy Secretary.

[FR Doc. E6–21159 Filed 12–12–06; 8:45 am]

BILLING CODE 8011–01–P

SECURITIES AND EXCHANGE COMMISSION

Release No. 34–54886; File No. SR–Phlx–2006–74]

Self-Regulatory Organizations; Philadelphia Stock Exchange, Inc.; Notice of Filing of Proposed Rule Change, and Amendment Nos. 1 and 2 Thereto, Relating To a Pilot Program to Quote and Trade Options in Penny Increments

December 6, 2006.

Pursuant to Section 19(b)(1) of the Securities Exchange Act of 1934 (''Act''),[1] and Rule 19b–4 thereunder,[2] notice is hereby given that on November 13, 2006, the Philadelphia Stock Exchange, Inc. (''Phlx'' or ''Exchange'') filed with the Securities and Exchange Commission (''Commission'') the proposed rule change as described in Items I, II, and III below, which Items have been substantially prepared by the Phlx. On November 22, 2006, the Exchange filed Amendment No. 1 to the proposed rule change.[3] The Exchange filed Amendment No. 2 to the proposed rule change on December 5, 2006.[4] The Commission is publishing this notice to solicit comments on the proposed rule change, as amended, from interested persons.

I. Self-Regulatory Organization's Statement of the Terms of Substance of the Proposed Rule Change

The Phlx, pursuant to Section 19(b)(1) of the Act[5] and Rule 19b–4 thereunder,[6] proposes to amend various Exchange rules in order to establish a six-month pilot period, beginning on January 26, 2007 (the ''pilot''), during which certain options would be quoted and traded on the Exchange in minimum increments of $0.01 for all series in such options with a price of less than $3.00, and in minimum increments of $0.05 for all series in such options with a price of $3.00 or higher, except that options overlying the Nasdaq-100 Index Tracking Stock (''QQQQ'')[7] would be quoted and traded in minimum increments of $0.01 for all series regardless of the price. A list of all such options would be communicated to Phlx's membership via Exchange circular.

The text of the proposed rule change, including Exhibit 2 (a draft Exchange circular which includes a list of all options to be included in the pilot), is available on the Phlx's Web site at *http://www.phlx.com,* at the Phlx's Office of the Secretary, and at the Commission's Public Reference Room.

II. Self-Regulatory Organization's Statement of the Purpose of, and Statutory Basis for, the Proposed Rule Change

In its filing with the Commission, the Phlx included statements concerning the purpose of and basis for the proposed rule change and discussed any comments it received on the proposed rule change. The text of these statements may be examined at the places specified in Item IV below. The Exchange has prepared summaries, set forth in Sections A, B, and C below, of the most significant aspects of such statements.

A. Self-Regulatory Organization's Statement of the Purpose of, and Statutory Basis for, the Proposed Rule Change

1. Purpose

The purpose of the proposed rule change is to establish a six-month pilot program during which certain options would be quoted and traded in increments of $0.01.

Scope of the Pilot

Proposed Phlx Rule 1034(a)(i)(B) states that the pilot would begin on January 26, 2007, and would extend for a six-month period. There will be 13 options included in the pilot as determined by the Commission, subject to a rollout schedule to be determined. The rollout would begin on January 26, 2007. The options included in the pilot are:

Symbol	Underlying security
IWM	Ishares Russell 2000
QQQQ	QQQQ
SMH	SemiConductor Holders
GE	General Electric
AMD	Advanced Micro Devices
MSFT	Microsoft
INTC	Intel
CAT	Caterpillar
WFMI	Whole Foods
TXN	Texas Instruments
A	Agilent Tech Inc.
FLEX	Flextronics International
SUNW	Sun Micro

Changes to Minimum Increments

The Exchange proposes to adopt Phlx Rule 1034(a)(i)(B), which would provide that the options included in the pilot would be quoted in minimum increments of $0.01 for all series in such options with a price of less than $3.00, and in minimum increments of $0.05 for all series in such options with a price of $3.00 or higher, except that options overlying the QQQQ would be quoted and traded in minimum increments of $0.01 for all series regardless of the price. A list of all such options would be communicated to Phlx's membership via Exchange circular.

Automatic Executions During Crossed Markets

The Exchange anticipates that the instance of crossed markets (where the bid price is greater than the offer price) will increase in options traded in penny increments. Accordingly, the Exchange proposes to amend its rules concerning automatic executions during crossed markets, and its exemption from Trade-Through[8] liability when a Trade-Through occurs due to an automatic execution when the Exchange's disseminated market is crossed, or crosses the disseminated market of another options exchange, and the Exchange's disseminated price on the opposite side of the market for the

[19] 17 CFR 200.30–3(a)(12).

[1] 15 U.S.C. 78s(b)(1).

[2] 17 CFR 240.19b–4.

[3] Amendment No. 1 replaced the original filing in its entirety.

[4] Amendment No. 2 replaced the previous filing in its entirety.

[5] 15 U.S.C. 78s(b)(1).

[6] 17 CFR 240.19b–4.

[7] The Nasdaq-100®, Nasdaq-100 Index®, Nasdaq®, The Nasdaq Stock Market®, Nasdaq-100 Shares℠, Nasdaq-100 Trust℠, Nasdaq-100 Index Tracking Stock℠, and QQQ℠ are trademarks or service marks of The Nasdaq Stock Market, Inc. (*Nasdaq*) and have been licensed for use for certain purposes by the Philadelphia Stock Exchange pursuant to a License Agreement with Nasdaq. The Nasdaq-100 Index® (the *Index*) is determined, composed, and calculated by Nasdaq without regard to the Licensee, the Nasdaq-100 Trust℠, or the beneficial owners of Nasdaq-100 Shares℠. Nasdaq has complete control and sole discretion in determining, comprising, or calculating the Index or in modifying in any way its method for determining, comprising, or calculating the Index in the future.

[8] ''Trade-Through'' means a transaction in an options series at a price that is inferior to the National Best Bid or Offer (''NBBO''), but shall not include a transaction that occurs at a price that is one minimum quoting increment inferior to the NBBO provided a Linkage Order is contemporaneously sent to each Participant Exchange disseminating the NBBO for the full size of the Participant Exchange's bid (offer) that represents the NBBO. *See* Phlx Rule 1083(t).

incoming order establishes, or is equal to, the NBBO.

Currently, orders on the Exchange that are otherwise eligible for automatic execution are handled manually by the specialist when the Exchange's disseminated market is crossed by more than one minimum trading increment (as defined in Phlx Rule 1034) (*i.e.,* 2.10 bid, 2 offer), or crosses the disseminated market of another options exchange by more than one minimum trading increment.[9] The effect of this is that the Exchange currently provides automatic executions during crossed markets when the Exchange's disseminated market is crossed by not more than one minimum trading increment, or crosses the disseminated market of another options exchange by not more than one minimum trading increment, and the Exchange's disseminated price on the opposite side of the market for the incoming order establishes, or is equal to, the NBBO.[10] The Exchange proposes to delete Phlx Rule 1080(c)(iv)(A), which would thereby mean that the Exchange will provide automatic executions in options where the Exchange's disseminated market is the NBBO [11] and is crossed, or crosses the disseminated market of another options exchange, regardless of the amount by which such market is crossed.[12]

Trade-Throughs

Currently, Phlx Rule 1085(b) affords Exchange members several exemptions from Trade-Through liability and the requirements under Phlx's rules and the Plan for the Purpose of Creating and Operating an Intermarket Option Linkage concerning satisfaction of Trade-Throughs. Among the exemptions from such liability and satisfaction responsibility is current Phlx Rule 1085(b)(10), which provides an exemption when the Trade-Through was the result of an automatic execution when the Exchange's disseminated market is the NBBO and is crossed by not more than one minimum trading increment (as defined in Phlx Rule 1034), or crosses the disseminated market of another options exchange by not more than one minimum trading increment.

In order to be consistent with the proposed rule change (described above) to provide automatic executions when the Exchange's disseminated market is the NBBO regardless of the amount by which the market is crossed, the Exchange proposes to amend the rule to state that there would be an exemption from such liability and satisfaction responsibility when the Trade-Through was the result of an automatic execution when the Exchange's disseminated market is the NBBO and is crossed, or crosses the disseminated market of another options exchange. The proposed rule change would delete the current language contained in Phlx Rule 1085(b)(10) that limits the exemption from Trade-Through and satisfaction liability to automatic executions at the NBBO during markets that are crossed by one minimum trading increment. The Exchange believes that the proposed rule change would facilitate the prompt resolution of crossed markets by permitting automatic executions when the Exchange's disseminated market is crossed, or crosses the disseminated market of another options exchange, regardless of the amount by which the market is crossed.

Report to the Commission

Proposed Phlx Rule 1034(a)(i)(C) would require the Exchange to prepare and submit an analytical report to the Commission that addresses the impact of the first three months of the pilot on the quality of the Exchange's markets and options quote traffic and capacity on or before the last day of the fourth month of the pilot. The purpose of this provision is to comply with the Commission's mandate that the Exchange submit such a report within the time frame specified in the rule.

Zero-Bid Option Series

Currently, Phlx Rule 1080(i) states that the Exchange's AUTOM System will convert market orders to sell a particular option series to limit orders to sell with a limit price of $0.05 that are received when the bid price for such series is zero. The proposal would amend Phlx Rule 1080(i) to state that the system will convert such orders to limit orders to sell with a limit price of the minimum trading increment applicable to such series. The effect of this with respect to options quoted and traded in minimum increments of $0.01 would be that such conversion would be to a limit order to sell at $0.01, rather than $0.05.

Quote Mitigation

The Exchange recognizes that quoting and trading in $0.01 increments will most assuredly result in a greater number of quotations submitted in options that are included in the pilot. Therefore, in order to mitigate quote traffic, the Exchange proposes to amend Phlx Rule 1082, Firm Quotations, by adopting new Phlx Rule 1082(a)(ii)(C), which would modify the Exchange's definition of ''disseminated size'' such that the Exchange will disseminate fewer updated quotations.

Specifically, proposed Phlx Rule 1082(a)(ii)(C) would set forth the conditions under which the Exchange would disseminate updated quotations based on changes in the Exchange's disseminated price and/or size. The proposed rule would require the Exchange to disseminate an updated bid and offer price, together with the size associated with such bid and offer, when: (1) The Exchange's disseminated bid or offer price increases or decreases; (2) the size associated with the Exchange's disseminated bid or offer decreases; or (3) the size associated with the Exchange's bid (offer) increases by an amount greater than or equal to a percentage (never to exceed 20%) of the size associated with previously disseminated bid (offer). Such percentage, which would never exceed 20%, would be determined on an issue-by-issue basis by the Exchange and announced to membership via Exchange circular. The percentage size increase necessary to give rise to a refreshed quote may vary from issue to issue, depending, without limitation, on the liquidity, average volume, and average number of quotations submitted in the issue. Proposed Phlx Rule 1082(b)(ii)(C) would not be limited to options included in the pilot, and would thus apply to all options traded on the Exchange.

The Exchange represents that participants on its system would not be notified of any incremental increase in the size of the Exchange's quote under proposed Phlx Rule 1082(a)(ii)(C)(3) until such quote is disseminated to OPRA. Therefore, no participant on the Exchange's system would have information that is unavailable to another participant.

The Exchange believes that the limitation on dissemination of quotations that increase in size by a nominal amount should significantly mitigate the amount of options quote traffic on the Exchange, and addresses issues of options quote capacity on the Exchange and in the National Market System.

[9] *See* Phlx Rule 1080(c)(iv)(A).

[10] *See* Phlx Rule 1085(b)(10). *See also* Securities Exchange Act Release No. 53449 (March 8, 2006), 71 FR 13441 (March 15, 2006) (SR–Phlx–2005–45).

[11] The Exchange provides automatic executions only when its disseminated market is the NBBO. *See* Phlx Rule 1080(c)(iv)(E).

[12] The Exchange notes that another options exchange currently provides automatic executions during crossed markets regardless of the amount by which the market is crossed. *See* Securities Exchange Act Release No. 54229 (July 27, 2006), 71 FR 44058 (August 3, 2006) (SR–CBOE–2005–90).

In addition to the measures proposed above concerning mitigation of quote traffic on the Exchange, the Exchange has filed other proposed rule changes that the Exchange believes should reduce the number of quotations generated on the Exchange.

Specifically, the Commission recently approved a proposed rule change stating that, on a six-month pilot basis, Streaming Quote Traders (''SQTs''),[13] Remote Streaming Quote Traders (''RSQTs''),[14] and SQTs and RSQTs that receive Directed Orders [15] (''DSQTs'' and ''DRSQTs'' respectively) are deemed not to be assigned in any option series until the time to expiration for such series is less than nine months.[16] Accordingly, the market making obligations described in Phlx Rule 1014(b)(ii)(D) do not apply to SQTs, RSQTs, DSQTs and DRSQTs respecting series with an expiration of nine months or greater, and thus they will be required to submit fewer quotes.

Additionally, the Exchange filed a proposed rule change authorizing the Exchange's Options Allocation, Evaluation and Securities Committee (''OAESC'') [17] to assign trading privileges in options to SQTs and RSQTs by ''root symbol,'' as applied by the Options Clearing Corporation, such that an SQT or RSQT, on request, may be assigned in only certain series of an option.[18] The market making obligations applicable to SQTs and RSQTs thus would not apply to series in which an SQT or RSQT is not assigned, which should reduce the number of quotations required to be submitted.

The Exchange has also submitted a separate proposal to establish a maximum number of quoting participants that may be assigned to a particular equity option at any one time.[19] This would limit the number of participants quoting in a particular equity option and thus should limit the number of quotations submitted in such equity options.

In another separate submission, the Exchange has proposed to establish monthly Performance Evaluations by the Exchange of its member organizations that have SQTs and RSQTs, to determine whether they have fulfilled performance standards relating to, among other things, quality of markets, efficient quote submission to the Exchange (including quotes submitted through a third party vendor), competition, observance of ethical standards, and administrative factors.[20] Under that proposal, failure to meet established minimum performance requirements could result in restriction by the OAESC of additional options assignments; suspension, termination, or restriction of an existing assignment on one or more options; or suspension, termination, or restriction of an SQT's or RSQT's status as such. The Exchange believes that such evaluations and possible consequences for failure to meet specific minimum standards should encourage efficient quoting and use of the Exchange's capacity and bandwidth by providing a disincentive for SQTs and RSQTs to submit quotations that do not improve the Exchange's disseminated price or materially increase the Exchange's disseminated size.

2. Statutory Basis

The Exchange believes that the proposed rule change is consistent with Section 6(b) of the Act,[21] in general, and furthers the objectives of Section 6(b)(5) of the Act,[22] in particular, in that the proposed rule change is designed to promote just and equitable principles of trade, to remove impediments to and perfect the mechanism of a free and open market and a national market system, and, in general, to protect investors and the public interest, by establishing rules concerning the pilot, while simultaneously mitigating quote traffic.

B. Self-Regulatory Organization's Statement on Burden on Competition

The Exchange does not believe that the proposed rule change will impose any burden on competition that is not necessary or appropriate in furtherance of the purposes of the Act.

C. Self-Regulatory Organization's Statement on Comments on the Proposed Rule Change Received From Members, Participants or Others

Written comments on the proposed rule change were neither solicited nor received.

III. Date of Effectiveness of the Proposed Rule Change and Timing for Commission Action

Within 35 days of the date of publication of this notice in the **Federal Register** or within such longer period (i) as the Commission may designate up to 90 days of such date if it finds such longer period to be appropriate and publishes its reasons for so finding or (ii) as to which the Exchange consents, the Commission will:

(A) By order approve such proposed rule change, or

(B) Institute proceedings to determine whether the proposed rule change should be disapproved.

IV. Solicitation of Comments

Interested persons are invited to submit written data, views and arguments concerning the foregoing, including whether the proposed rule change is consistent with the Act. Comments may be submitted by any of the following methods:

Electronic Comments

- Use the Commission's Internet comment form *http://www.sec.gov/rules/sro.shtml*; or
- Send an e-mail to *rule-comments@sec.gov*. Please include File No. SR–Phlx–2006–74 on the subject line.

Paper Comments

- Send paper comments in triplicate to Nancy M. Morris, Secretary, Securities and Exchange Commission, 100 F Street, NE, Washington, DC 20549–1090.

All submissions should refer to File No. SR–Phlx–2006–74. This file number should be included on the subject line if e-mail is used. To help the Commission process and review your

[13] An SQT is an Exchange Registered Options Trader (''ROT'') who has received permission from the Exchange to generate and submit option quotations electronically through AUTOM in eligible options to which such SQT is assigned. An SQT may only submit such quotations while such SQT is physically present on the floor of the Exchange. *See* Phlx Rule 1014(b)(ii)(A).

[14] An RSQT is an ROT that is a member or member organization with no physical trading floor presence who has received permission from the Exchange to generate and submit option quotations electronically through AUTOM in eligible options to which such RSQT has been assigned. An RSQT may only submit such quotations electronically from off the floor of the Exchange. *See* Phlx Rule 1014(b)(ii)(B).

[15] The term ''Directed Order'' means any customer order (other than a stop or stop-limit order as defined in Phlx Rule 1066) to buy or sell which has been directed to a particular specialist, RSQT, or SQT by an Order Flow Provider. *See* Phlx Rule 1080(l)(i)(A).

[16] *See* Securities Exchange Act Release No. 54648 (October 24, 2006), 71 FR 63375 (October 30, 2006) (SR–Phlx–2006–52).

[17] The OAESC is a standing committee of the Exchange that has jurisdiction over the allocation, retention and transfer of the privileges to deal in all options to, by and among members on the options and foreign currency options trading floors. It is responsible for appointing specialists, alternate or assistant specialists or odd-lot dealers on the options and foreign currency options trading floors. It also establishes standards for the periodic review and evaluation of their performance and is empowered to suspend or revoke their appointments upon showing of reasonable cause therefore. *See* Phlx By-Law Article X, Section 10–7(a); *see also* Phlx Rule 500.

[18] *See* Securities Exchange Act Release No. 54807 (November 21, 2006), 71 FR 69173 (November 29, 2006) (SR–Phlx–2006–53).

[19] *See* SR–Phlx–2006–81.

[20] *See* Securities Exchange Act Release No. 54859 (December 1, 2006) (SR–Phlx–2006–51).

[21] 15 U.S.C. 78f(b).

[22] 15 U.S.C. 78f(b)(5).

comments more efficiently, please use only one method. The Commission will post all comments on the Commission's Internet Web site at *http://www.sec.gov/rules/sro.shtml*. Copies of the submission, all subsequent amendments, all written statements with respect to the proposed rule change that are filed with the Commission, and all written communications relating to the proposed rule change between the Commission and any person, other than those that may be withheld from the public in accordance with the provisions of 5 U.S.C. 552, will be available for inspection and copying in the Commission's Public Reference Room. Copies of such filing also will be available for inspection and copying at the principal office of the Exchange. All comments received will be posted without change; the Commission does not edit personal identifying information from submissions. You should submit only information that you wish to make available publicly. All submissions should refer to File No. SR–Phlx–2006–74 and should be submitted on or before January 3, 2007.

For the Commission, by the Division of Market Regulation, pursuant to delegated authority.[23]

Florence E. Harmon,

Deputy Secretary.

[FR Doc. E6–21171 Filed 12–12–06; 8:45 am]

BILLING CODE 8011–01–P

[23] 17 CFR 200.30–3(a)(12).

SMALL BUSINESS ADMINISTRATION

Data Collection Available for Public Comments and Recommendations

ACTION: Notice and request for comments.

SUMMARY: In accordance with the Paperwork Reduction Act of 1995, this notice announces the Small Business Administration's intentions to request approval on a new and/or currently approved information collection.

DATES: Submit comments on or before February 12, 2007.

ADDRESSES: Send all comments regarding whether this information collection is necessary for the proper performance of the function of the agency, whether the burden estimates are accurate, and if there are ways to minimize the estimated burden and enhance the quality of the collection, to Veronica Dymond, Public Affairs Support Specialist, Office of Communications and Public Liaison, Small Business Administration, 409 3rd Street, SW., 7th Floor, Wash., DC 20416.

FOR FURTHER INFORMATION CONTACT: Veronica Dymond, Public Affairs Support Specialist, Office of Communications and Public Liaison 202–205–6746 *veronica.dymond@sba.gov*; Curtis B. Rich, Management Analyst, 202–205–7030 *curtis.rich@sba.gov*.

SUPPLEMENTARY INFORMATION: 15 U.S.C.A. 637(b)(1)(A)(iv) authorizes the Administrator of the U.S. Small Business Administration (SBA) to recognize achievements of small businesses through appropriate events and activities. In recognition of the small business community's contributions to the nation's economy, the President of the United States designates one week each year as Small Business Week. Leading up to that week, the U.S. Small Business Administration seeks nominations for various recognition awards honoring the nation's small business owners and entrepreneurs, small business advocates, and small businesses. The information collected through the proposed Information Form will be used to identify an actual or apparent conflict of interest, to verify the accuracy of the information submitted with the nomination, and to determine whether a nominee is eligible for a recognition award.

Title: ''Small Business Week Award Nominees.''

Description of Respondents: Respondents are entrepreneurs and small business, owners nominated for SBA's National Small, Business Week awards.

Form No: N/A.

Annual Responses: 600.

Annual Burden: 450.

Jacqueline White,

Chief, Administrative Information Branch.

[FR Doc. E6–21194 Filed 12–12–06; 8:45 am]

BILLING CODE 8025–01–P

SMALL BUSINESS ADMINISTRATION

CommunityExpress Pilot Program

AGENCY: U.S. Small Business Administration (SBA).

ACTION: Notice of Pilot Program extension.

SUMMARY: This notice announces SBA's extension of the CommunityExpress Pilot Program until March 31, 2007. This extension will allow time for the Agency to complete its analyses of this program and also complete internal discussions regarding potential modifications and enhancements.

DATES: The CommunityExpress Pilot Program is extended under this notice until March 31, 2007.

FOR FURTHER INFORMATION CONTACT: Charles Thomas, Office of Financial Assistance, U.S. Small Business Administration, 409 Third Street, SW., Washington, DC 20416; Telephone (202) 205–6490; *charles.thomas@sba.gov.*

SUPPLEMENTARY INFORMATION: The CommunityExpress Pilot Program was established in 1999 as a subprogram of the Agency's SBAExpress Program. Lenders approved for participation in CommunityExpress are authorized to use the expedited loan processing procedures in place for the SBAExpress Program, but the loans approved under this Program must be to distressed or underserved markets. To encourage lenders to make these loans, SBA provides its standard 75–85 percent guaranty, which contrasts to the 50 percent guaranty the Agency provides under SBAExpress. However, under CommunityExpress participating lenders must arrange, and when necessary, pay for appropriate technical assistance for any borrowers under the program. Maximum loan amounts under this Program are limited to $250,000. SBA previously extended CommunityExpress until November 30, 2005 (70 FR 56962), again to May 31, 2006 (70 FR 71363), and then again to December 31, 2006 (71 FR 29703), to consider possible changes and enhancements to the Program.

The further extension of this program until March 31, 2007, will allow the SBA to complete its analyses and internal discussions of possible changes and enhancements to the program. It will also allow SBA to further consult with its lending partners, the small business community and its oversight authorities about the Program.

(Authority: 13 CFR 120.3)

Janet A. Tasker,

Acting Associate Administrator for Financial Assistance.

[FR Doc. E6–21137 Filed 12–12–06; 8:45 am]

BILLING CODE 8025–01–P

DEPARTMENT OF STATE

[Public Notice 5639]

Culturally Significant Objects Imported for Exhibition Determinations: ''Jeff Wall''

SUMMARY: Notice is hereby given of the following determinations: Pursuant to the authority vested in me by the Act of October 19, 1965 (79 Stat. 985; 22 U.S.C. 2459), Executive Order 12047 of March

27, 1978, the Foreign Affairs Reform and Restructuring Act of 1998 (112 Stat. 2681, *et seq.*; 22 U.S.C. 6501 note, *et seq.*), Delegation of Authority No. 234 of October 1, 1999, Delegation of Authority No. 236 of October 19, 1999, as amended, and Delegation of Authority No. 257 of April 15, 2003 [68 FR 19875], I hereby determine that the objects to be included in the exhibition ''Jeff Wall'', imported from abroad for temporary exhibition within the United States, are of cultural significance. The objects are imported pursuant to loan agreements with the foreign owners or custodians. I also determine that the exhibition or display of the exhibit objects at The Museum of Modern Art, New York, New York, beginning on or about February 25, 2007 until on or about May 14, 2007, the Art Institute of Chicago, Chicago, Illinois, beginning on or about June 30, 2007 until on or about September 23, 2007, and the San Francisco Museum of Modern Art, San Francisco, California, beginning on or about October 21, 2007 until on or about January 27, 2008, is in the national interest. Public Notice of these Determinations is ordered to be published in the **Federal Register.**

FOR FURTHER INFORMATION CONTACT: For further information, including a list of the exhibit objects, contact Wolodymyr Sulzynsky, Attorney-Adviser, Office of the Legal Adviser, U.S. Department of State (telephone: (202) 453–8050). The address is U.S. Department of State, SA–44, 301 4th Street, SW., Room 700, Washington, DC 20547–0001.

Dated: December 5, 2006.

C. Miller Crouch,

Principal Deputy Assistant Secretary for Educational and Cultural Affairs, Department of State.

[FR Doc. E6–21215 Filed 12–12–06; 8:45 am]

BILLING CODE 4710–05–P

DEPARTMENT OF STATE

[Public Notice 5641]

Culturally Significant Objects Imported for Exhibition Determinations: ''Matisse: Painter as Sculptor''

SUMMARY: Notice is hereby given of the following determinations: Pursuant to the authority vested in me by the Act of October 19, 1965 (79 Stat. 985; 22 U.S.C. 2459), Executive Order 12047 of March 27, 1978, the Foreign Affairs Reform and Restructuring Act of 1998 (112 Stat. 2681, *et seq.*; 22 U.S.C. 6501 note, *et seq.*), Delegation of Authority No. 234 of October 1, 1999, Delegation of Authority No. 236 of October 19, 1999, as amended, and Delegation of Authority No. 257 of April 15, 2003 [68 FR 19875], I hereby determine that the objects to be included in the exhibition ''Matisse: Painter as Sculptor'', imported from abroad for temporary exhibition within the United States, are of cultural significance. The objects are imported pursuant to loan agreements with the foreign owners or custodians. I also determine that the exhibition or display of the exhibit objects at the Dallas Museum of Art, Dallas, Texas and the Nasher Sculpture Center, Dallas, Texas, beginning on or about January 22, 2007 until on or about April 29, 2007, the San Francisco Museum of Modern Art, San Francisco, California, beginning on or about June 9, 2007 until on or about September 16, 2007, and the Baltimore Museum of Art, Baltimore, Maryland, beginning on or about October 28, 2007 until on or about February 3, 2008, is in the national interest. Public Notice of these Determinations is ordered to be published in the **Federal Register**.

FOR FURTHER INFORMATION CONTACT: For further information, including a list of the exhibit objects, contact Wolodymyr Sulzynsky, Attorney-Adviser, Office of the Legal Adviser, U.S. Department of State (telephone: (202) 453–8050). The address is U.S. Department of State, SA–44, 301 4th Street, SW., Room 700, Washington, DC 20547–0001.

Dated: December 5, 2006.

C. Miller Crouch,

Principal Deputy Assistant Secretary for Educational and Cultural Affairs, Department of State.

[FR Doc. E6–21221 Filed 12–12–06; 8:45 am]

BILLING CODE 4710–05–P

DEPARTMENT OF STATE

[Public Notice 5640]

Culturally Significant Objects Imported for Exhibition Determinations: ''The Temptations of Flora: Jan van Huysum (1682–1749)''

SUMMARY: Notice is hereby given of the following determinations: Pursuant to the authority vested in me by the Act of October 19, 1965 (79 Stat. 985; 22 U.S.C. 2459), Executive Order 12047 of March 27, 1978, the Foreign Affairs Reform and Restructuring Act of 1998 (112 Stat. 2681, *et seq.*; 22 U.S.C. 6501 note, *et seq.*), Delegation of Authority No. 234 of October 1, 1999, Delegation of Authority No. 236 of October 19, 1999, as amended, and Delegation of Authority No. 257 of April 15, 2003 [68 FR 19875], I hereby determine that the objects to be included in the exhibition ''The Temptations of Flora: Jan van Huysum (1682–1749)'', imported from abroad for temporary exhibition within the United States, are of cultural significance. The objects are imported pursuant to loan agreements with the foreign owners or custodians. I also determine that the exhibition or display of the exhibit objects at The Museum of Fine Arts, Houston, in Houston, Texas, from on or about February 18, 2007, until on or about May 20, 2007, and at possible additional venues yet to be determined, is in the national interest. Public Notice of these Determinations is ordered to be published in the **Federal Register**.

FOR FURTHER INFORMATION CONTACT: For further information, including a list of the exhibit objects, contact Wolodymyr Sulzynsky, Attorney-Adviser, Office of the Legal Adviser, U.S. Department of State (telephone: 202–453–8050). The address is U.S. Department of State, SA–44, 301 4th Street, SW., Room 700, Washington, DC 20547–0001.

Dated: December 5, 2006.

C. Miller Crouch,

Principal Deputy Assistant Secretary for Educational and Cultural Affairs, Department of State.

[FR Doc. E6–21213 Filed 12–12–06; 8:45 am]

BILLING CODE 4710–05–P

DEPARTMENT OF TRANSPORTATION

Office of the Secretary

Aviation Proceedings, Agreements Filed the Week Ending November 24, 2006

The following Agreements were filed with the Department of Transportation under the Sections 412 and 414 of the Federal Aviation Act, as amended (49 U.S.C. 1382 and 1384) and procedures governing proceedings to enforce these provisions. Answers may be filed within 21 days after the filing of the application.

Docket Number: OST–2006–2640.9.
Date Filed: November 20, 2006.
Parties: Members of the International Air Transport Association.
Subject: TC2 Within Europe (Memo 0646), Expedited Resolutions Geneva, October 16–17, 2006. *Intended effective date:* December 4, 2006.

Docket Number: OST–2006–26434.
Date Filed: November 21, 2006.
Parties: Members of the International Air Transport Association.
Subject: TC31 TC3-Central America, South America, Expedited Resolution 002f, Bangkok, October 23–28, 2006, (Memo 0388), *Intended effective date:* January 15, 2007.

Docket Number: OST–2006–26453.
Date Filed: November 23, 2006.
Parties: Members of the International Air Transport Association.

Subject: TC2 Within Europe, Expedited Resolutions, Geneva, October 16–17, 2006, (Memo PTC2 EUR 0647), TC2 Europe except between points in the ECAA, Expedited Resolutions, Geneva, October 16–17, 2006, *Implementation Date:* March 1, 2007 (Memo PTC2 Eur 0649), *Intended effective date*: December 10, 2006

Docket Number: OST–2006–26454.

Date Filed: November 24, 2006.

Parties: Members of the International Air Transport Association,

Subject: Mail Vote 521 Adoption—Resolutions (Memo 0645). *Intended effective date:* December 1, 2006.

Docket Number: OST–2006–26455.

Date Filed: November 24, 2006.

Parties: Members of the International Air Transport Association.

Subject: PSC/RESO/133 dated November 17, 2006, Expedited Resolutions & Recommended Practice, *Intended effective date:* January 1, 2007 and March 1, 2007.

Renee V. Wright,

Program Manager, Docket Operations, Federal Register Liaison.

[FR Doc. E6–21180 Filed 12–12–06; 8:45 am]

BILLING CODE 4910–9X–P

DEPARTMENT OF TRANSPORTATION

Office of the Secretary

Aviation Proceedings, Agreements Filed the Week Ending December 1, 2006

The following Agreements were filed with the Department of Transportation under the Sections 412 and 414 of the Federal Aviation Act, as amended (49 U.S.C. 1382 and 1384) and procedures governing proceedings to enforce these provisions. Answers may be filed within 21 days after the filing of the application.

Docket Number: OST–2006–26465.

Date Filed: November 27, 2006.

Parties: Members of the International Air Transport Association.

Subject: MAIL VOTE NUMBER A133, PAC2 (Mail A133), Amendments to Financial Criteria—Finland, *Intended effective date:* January 1, 2007.

Docket Number: OST–2006–26520.

Date Filed: December 1, 2006.

Parties: Members of the International Air Transport Association.

Subject: PTC COMP Mail Vote 518, Resolution 210 Charge for PTA Services, (Memo 1368), *Intended effective date:* December 10, 2006,

Renee V. Wright,

Program Manager, Docket Operations, Federal Register Liaison.

[FR Doc. E6–21182 Filed 12–12–06; 8:45 am]

BILLING CODE 4910–9X–P

DEPARTMENT OF TRANSPORTATION

Office of the Secretary

Notice of Applications for Certificates of Public Convenience and Necessity and Foreign Air Carrier Permits Filed Under Subpart B (Formerly Subpart Q) During the Week Ending November 24, 2006

The following Applications for Certificates of Public Convenience and Necessity and Foreign Air Carrier Permits were filed under Subpart B (formerly Subpart Q) of the Department of Transportation's Procedural Regulations (See 14 CFR 301.201 *et. seq.*).

The due date for Answers, Conforming Applications, or Motions to Modify Scope are set forth below for each application. Following the Answer period DOT may process the application by expedited procedures. Such procedures may consist of the adoption of a show-cause order, a tentative order, or in appropriate cases a final order without further proceedings.

Docket Number: OST–2005–22228 and OST–2006–26419.

Date Filed: November 20, 2006.

Due Date for Answers, Conforming Applications, or Motion to Modify Scope: December 11, 2006.

Description: Application of Cargo 360, Inc. (''Cargo 360'') requesting a certificate of public convenience and necessity authorizing it to engage in scheduled foreign air transportation of property and mail between (i) a point or points in the United States via intermediate points and a point or points in the countries listed in Exhibit A, each of which has concluded an ''Open Skies'' Air Services Agreement with the United States, and beyond; (ii) points in any two or more of the countries listed in Exhibit B pursuant to seventh-freedom all-cargo rights granted in open skies agreements with those countries; (iii) a point or points in the United States and a point or points in the United Kingdom; and (iv) a point or points in the United States and Hong Kong. Cargo 360 additionally requests issuance of the same blanket route integration authority the Department has granted to various carriers by Order 2006–1–1.

Docket Number: OST–2006–23543.

Date Filed: November 20, 2006

Due Date for Answers, Conforming Applications, or Motion to Modify Scope: December 11, 2006.

Description: Application of Globespan Airways Limited d/b/a Flyglobespan (''Flyglobespan'') requesting an amendment to its pending application for a foreign air carrier permit, to authorize Flyglobespan to engage in scheduled foreign air transportation of persons, property and mail between any point or points in the United States and any point or points in the United Kingdom, excluding London's Heathrow and Gatwick airports, via intermediate points.

Docket Number: OST–2006–26436.

Date Filed: November 21, 2006.

Due Date for Answers, Conforming Applications, or Motion to Modify Scope: December 12, 2006.

Description: Application of Cat Aviation AG requesting a foreign air carrier permit authorizing it to conduct: (a) Charter foreign air transportation of persons, property and mail between any point or points in Switzerland and any point or points in the United States; and between any point or points in the United States and any point or points in a third country or countries, provided that such service constitutes part of a continuous operation, with or without a change of aircraft, that includes air service to Switzerland for the purpose of carrying local traffic between Switzerland and the United States; and (b) other charters between third countries and the United States.

Docket Number: OST–2005–26438.

Date Filed: November 21, 2006.

Due Date for Answers, Conforming Applications, or Motion to Modify Scope: December 12, 2006.

Description: Application of Spirit Airlines, Inc. (''Spirit'') requesting a certificate of public convenience and necessity that would authorize Spirit to engage in scheduled foreign air transportation of persons, property and mail between Fort Lauderdale, FL, on the one hand, and Caracas, Venezuela, on the other hand.

Renee V. Wright,

Program Manager, Docket Operations, Federal Register Liaison.

[FR Doc. E6–21178 Filed 12–12–06; 8:45 am]

BILLING CODE 4910–9X–P

DEPARTMENT OF TRANSPORTATION

Office of the Secretary

Notice of Applications for Certificates of Public Convenience and Necessity and Foreign Air Carrier Permits Filed Under Subpart B (Formerly Subpart Q) During the Week Ending December 1, 2006

The following Applications for Certificates of Public Convenience and Necessity and Foreign Air Carrier Permits were filed under Subpart B (formerly Subpart Q) of the Department of Transportation's Procedural Regulations (See 14 CFR 301.201 et. seq.). The due date for Answers, Conforming Applications, or Motions to Modify Scope are set forth below for each application. Following the Answer period DOT may process the application by expedited procedures. Such procedures may consist of the adoption of a show-cause order, a tentative order, or in appropriate cases a final order without further proceedings.

Docket Number: OST–2005–22228 and OST–2006–26524.

Date Filed: December 1, 2006.

Due Date for Answers, Conforming Applications, or Motion to Modify Scope: December 22, 2006.

Description: Application of JetBlue Airways Corporation (''JetBlue'') requesting a certificate of public convenience and necessity authorizing JetBlue to engage in foreign scheduled air transportation of persons, property and mail to Cancun, Mexico from Boston, MA.

Renee V. Wright,

Program Manager, Docket Operations, Federal Register Liaison.

[FR Doc. E6–21181 Filed 12–12–06; 8:45 am]

BILLING CODE 4910–9X–P

DEPARTMENT OF TRANSPORTATION

Federal Highway Administration

Notice of Final Federal Agency Actions on State Highway 130 in Texas

AGENCY: Federal Highway Administration (FHWA), DOT.

ACTION: Notice of limitation on claims for judicial review of actions by FHWA and other federal agencies.

SUMMARY: This notice announces actions taken by the FHWA and other Federal agencies that are final within the meaning of 23 U.S.C. 139(l)(1). The actions relate to a proposed highway project, State Highway 130 (SH 130), north of Georgetown at I–35, south to IH 10 East of Seguin in Williamson, Travis, Caldwell, and Guadalupe Counties in the State of Texas. The Federal actions, taken as a result of an environmental review process conducted in accordance with the National Environmental Policy Act, 42 U.S.C. 4321–4351 (NEPA), determined certain issues relating to the proposed project. Those actions grant licenses, permits, and approvals for the project.

DATES: By this notice, the FHWA is advising the public of final agency actions subject to 23 U.S.C. 139(l)(1). A claim seeking judicial review of the Federal agency actions on the highway project will be barred unless the claim is filed on or before June 11, 2007. If the Federal law that authorizes judicial review of a claim provides a time period of less than 180 days for filing such claim, then that shorter time period still applies.

FOR FURTHER INFORMATION CONTACT: Mr. Salvador Deocampo, District Engineer, Federal Highway Administration, 300 E. 8th Street, Rm. 826, Austin, Texas 78701; telephone: (512) 536–5950; e-mail: *salvador.deocampo@fhwa.dot.gov.* The FHWA Texas Division Office's normal business hours are 7:45 a.m. to 4:15 p.m. You may also contact Ms. Dianna Noble, Director, Environmental Affairs Division, Texas Department of Transportation, 125 E. 11th Street, Austin, Texas 78701; telephone: (512) 416–2734; e-mail: *dnoble@dot.state.tx.us.* The TxDOT Environmental Affairs Division Office's normal business hours are 8 a.m. to 5 p.m.

SUPPLEMENTARY INFORMATION: Notice is hereby given that the FHWA and other Federal agencies have taken final agency actions by issuing licenses, permits, and approvals for the following highway project in the State of Texas: State Highway 130 (SH 130) is a 91-mile project from IH 35 at the intersection with SH 195, north of Georgetown, Texas, in Williamson County, through Travis and Caldwell Counties, to IH 10 near Seguin, Texas, in Guadalupe County. The project will be a controlled access tollway located predominantly on new alignment and will consist of 2 lanes in each direction with intermittent non-tolled frontage roads to maintain local access. A total of 8212 acres of new right-of-way will be acquired for construction of this project. The actions by the Federal agencies, and the laws under which such actions were taken, are described in the Final Environmental Impact Statement (FEIS) for the project, approved on April 4, 2001, in the FHWA Record of Decision (ROD) issued on June 5, 2001, the FEIS Reevaluation dated October 2006 and approved November 20, 2006, and in other documents in the FHWA administrative record. The FEIS, ROD, Reevaluation and other documents in the FHWA administrative record file are available by contacting the FHWA or the Texas Department of Transportation as noted above. The FEIS Reevaluation dated October 2006 and related documents are available online at *www.centraltexasturnpike.org.* This notice applies to all Federal agency decisions as of the issuance date of this notice and all laws under which such actions were taken, including but not limited to:

1. *General:* National Environmental Policy Act (NEPA) [42 U.S.C. 4321–4351]; Federal-Aid Highway Act [23 U.S.C. 109].

2. *Air:* Clean Air Act, 42 U.S.C. 7401–7671(q).

3. *Land:* Section 4(f) of the Department of Transportation Act of 1966 [49 U.S.C. 303].

4. *Wildlife:* Endangered Species Act [16 U.S.C. 1531–1544 and Section 1536]; Fish and Wildlife Coordination Act [16 U.S.C. 661–667(d)]; Migratory Bird Treaty Act [16 U.S.C. 703–712].

5. *Historic and Cultural Resources:* Section 106 of the National Historic Preservation Act of 1966, as amended [16 U.S.C. 470(f) *et seq.*]; Archeological Resources Protection Act of 1977 [16 U.S.C. 470(aa)–11]; Archeological and Historic Preservation Act [16 U.S.C. 469–469(c)]; Native American Grave Protection and Repatriation Act (NAGPRA) [25 U.S.C. 3001–3013].

6. *Social and Economic:* Civil Rights Act of 1964 [42 U.S.C. 2000(d)–2000(d)(1)]; Farmland Protection Policy Act (FPPA) [7 U.S.C. 4201–4209].

7. *Wetlands and Water Resources:* Clean Water Act, 33 U.S.C. 1251–1377 (Section 404, Section 401, Section 319); TEA–21 Wetlands Mitigation, 23 U.S.C. 103(b)(6)(m), 133(b)(11); Flood Disaster Protection Act, 42 U.S.C. 4001–4128.

8. *Executive Orders:* E.O. 11990 Protection of Wetlands; E.O. 11988 Floodplain Management; E.O. 12898 Federal Actions to Address Environmental Justice in Minority Populations and Low Income Populations; E.O. 11593 Protection and Enhancement of Cultural Resources; E.O. 13175 Consultation and Coordination with Indian Tribal Governments; E.O. 11514 Protection and Enhancement of Environmental Quality; E.O. 13112 Invasive Species.

(Catalog of Federal Domestic Assistance Program Number 20.205, Highway Planning and Construction. The regulations implementing Executive Order 12372 regarding intergovernmental consultation on

Federal programs and activities apply to this program.)

Authority: 23 U.S.C. 139(l)(1).

Issued on: November 30, 2006.

Salvador Deocampo,

District Engineer. Austin, Texas.

[FR Doc. 06–9654 Filed 12–12–06; 8:45 am]

BILLING CODE 4910–R4–M

DEPARTMENT OF TRANSPORTATION

Federal Motor Carrier Safety Administration

[Docket No. FMCSA–2006–26321]

Qualification of Drivers; Exemption Applications; Diabetes

AGENCY: Federal Motor Carrier Safety Administration (FMCSA).

ACTION: Notice of applications for exemption from the diabetes standard; request for comments.

SUMMARY: FMCSA announces receipt of applications from 66 individuals for exemptions from the prohibition against persons with insulin-treated diabetes mellitus (ITDM) operating commercial motor vehicles (CMVs) in interstate commerce. If granted, the exemptions would enable these individuals with ITDM to operate commercial motor vehicles in interstate commerce.

DATES: Comments must be received on or before January 12, 2007.

ADDRESSES: You may submit comments identified by Department of Transportation (DOT) Docket Management System (DMS) Docket Number FMCSA–2006–26321 using any of the following methods:

- Web site: *http://dmses.dot.gov*. Follow the instructions for submitting comments on the DOT electronic docket site.
- Fax: 1–202–493–2251.
- Mail: Docket Management Facility; U.S. Department of Transportation, 400 Seventh Street, SW., Nassif Building, Room PL–401, Washington, DC 20590–0001.
- Hand Delivery: Room PL–401 on the plaza level of the Nassif Building, 400 Seventh Street, SW., Washington, DC, between 9 a.m. and 5 p.m., Monday through Friday, except Federal holidays.
- Federal eRulemaking Portal: Go to *http://www.regulations.gov*. Follow the on-line instructions for submitting comments.

All submissions must include the Agency name and docket number for this Notice. Note that all comments received will be posted without change to *http://dms.dot.gov*, including any personal information provided. Please see the Privacy Act heading under Regulatory Notices. To read background documents or comments received, go to *http://dms.dot.gov* or to Room PL–401 on the plaza level of the Nassif Building, 400 Seventh Street, SW., Washington, DC between 9 a.m. and 5 p.m. Monday through Friday, except Federal holidays.

Docket: For access to the docket to read background documents or comments received, go to *http://dms.dot.gov* at any time or Room PL–401 on the plaza level of the Nassif Building, 400 Seventh Street, SW., Washington, DC, between 9 a.m. and 5 p.m., Monday through Friday, except Federal holidays. The DMS is available 24 hours each day, 365 days each year. If you want acknowledgment that we received your comments, please include a self-addressed, stamped envelope or postcard or print the acknowledgement page that appears after submitting comments on-line.

Privacy Act: Anyone may search the electronic form of all comments received into any of our dockets by the name of the individual submitting the comment (or of the person signing the comment, if submitted on behalf of an association, business, labor union, etc.). You may review the DOT's complete Privacy Act Statement in the **Federal Register** published on April 11, 2000 (65 FR 19477; Apr. 11, 2000). This information is also available at *http://dms.dot.gov*.

FOR FURTHER INFORMATION CONTACT: Dr. Mary D. Gunnels, Chief, Physical Qualifications Division, (202) 366–4001, *maggi.gunnels@dot.gov*, FMCSA, Department of Transportation, 400 Seventh Street, SW., Room 8301, Washington, DC 20590–0001. Office hours are from 8:30 a.m. to 5 p.m., Monday through Friday, except Federal holidays.

SUPPLEMENTARY INFORMATION:

Background

Under 49 U.S.C. 31136(e) and 31315, FMCSA may grant an exemption for a 2-year period if it finds ''such exemption would likely achieve a level of safety that is equivalent to, or greater than, the level that would be achieved absent such exemption.'' The statute also allows the Agency to renew exemptions at the end of the 2-year period. The 66 individuals listed in this Notice have recently requested an exemption from the diabetes prohibition in 49 CFR 391.41(b)(3), which applies to drivers of CMVs in interstate commerce. Accordingly, the Agency will evaluate the qualifications of each applicant to determine whether granting the exemption will achieve the required level of safety mandated by the statute.

Qualifications of Applicants

Louis T. Aceto

Mr. Aceto, age 59, has had ITDM since 2003. His endocrinologist examined him in 2006 and certified that he has had no hypoglycemic reactions resulting in loss of consciousness, requiring the assistance of another person, or resulting in impaired cognitive function that occurred without warning in the past 5 years; understands diabetes management and monitoring; and has stable control of his diabetes using insulin, and is able to drive a CMV safely. Mr. Aceto meets the requirements of the vision standard at 49 CFR 391.41(b)(10). His ophthalmologist examined him in 2006 and certified that he has stable nonproliferative diabetic retinopathy. He holds a Class C operator's license from Pennsylvania.

James D. Barton

Mr. Barton, 64, has had ITDM since 2004. His endocrinologist examined him in 2006 and certified that he has had no hypoglycemic reactions resulting in loss of consciousness, requiring the assistance of another person, or resulting in impaired cognitive function that occurred without warning in the past 5 years; understands diabetes management and monitoring; and has stable control of his diabetes using insulin, and is able to drive a CMV safely. Mr. Barton meets the requirements of the vision standard at 49 CFR 391.41(b)(10). His optometrist examined him in 2006 and certified that he does not have diabetic retinopathy. He holds a Class B CDL from North Carolina.

Lawrence H. Behrens

Mr. Behrens, 53, has had ITDM since 2005. His endocrinologist examined him in 2006 and certified that he has had no hypoglycemic reactions resulting in loss of consciousness, requiring the assistance of another person, or resulting in impaired cognitive function that occurred without warning in the past 5 years; understands diabetes management and monitoring; and has stable control of his diabetes using insulin, and is able to drive a CMV safely. Mr. Behrens meets the requirements of the vision standard at 49 CFR 391.41(b)(10). His ophthalmologist examined him in 2005 and certified that he does not have diabetic retinopathy. He holds a Class A CDL from Illinois.

Joel L. Bogenrief

Mr. Bogenrief, 28, has had ITDM since 1993. His endocrinologist examined him in 2006 and certified that he has had no hypoglycemic reactions resulting in loss of consciousness, requiring the assistance of another person, or resulting in impaired cognitive function that occurred without warning in the past 5 years; understands diabetes management and monitoring; and has stable control of his diabetes using insulin, and is able to drive a CMV safely. Mr. Bogenrief meets the requirements of the vision standard at 49 CFR 391.41(b)(10). His ophthalmologist examined him in 2006 and certified that he has stable nonproliferative diabetic retinopathy. He holds a Class B CDL from Iowa.

Timothy W. Brogan

Mr. Brogan, 22, has had ITDM since 1991. His endocrinologist examined him in 2006 and certified that he has had no hypoglycemic reactions resulting in loss of consciousness, requiring the assistance of another person, or resulting in impaired cognitive function that occurred without warning in the past 5 years; understands diabetes management and monitoring; and has stable control of his diabetes using insulin, and is able to drive a CMV safely. Mr. Brogan meets the requirements of the vision standard at 49 CFR 391.41(b)(10). His optometrist examined him in 2006 and certified that he does not have diabetic retinopathy. He holds a Class C operator's license from California.

Eddy B. Brown

Mr. Brown, 48, has had ITDM since 2006. His endocrinologist examined him in 2006 and certified that he has had no hypoglycemic reactions resulting in loss of consciousness, requiring the assistance of another person, or resulting in impaired cognitive function that occurred without warning in the past 5 years; understands diabetes management and monitoring; and has stable control of his diabetes using insulin, and is able to drive a CMV safely. Mr. Brown meets the requirements of the vision standard at 49 CFR 391.41(b)(10). His optometrist examined him in 2006 and certified that he does not have diabetic retinopathy. He holds a Class A CDL from North Carolina.

Kenneth E. Buck

Mr. Buck, 58, has had ITDM since 2004. His endocrinologist examined him in 2006 and certified that he has had no hypoglycemic reactions resulting in loss of consciousness, requiring the assistance of another person, or resulting in impaired cognitive function that occurred without warning in the past 5 years; understands diabetes management and monitoring; and has stable control of his diabetes using insulin, and is able to drive a CMV safely. Mr. Buck meets the requirements of the vision standard at 49 CFR 391.41(b)(10). His ophthalmologist examined him in 2006 and certified that he does not have diabetic retinopathy. He holds a Class A CDL from Vermont.

Carolynda Cain

Ms. Cain, 53, has had ITDM since 2004. Her endocrinologist examined her in 2006 and certified that she has had no hypoglycemic reactions resulting in loss of consciousness, requiring the assistance of another person, or resulting in impaired cognitive function that occurred without warning in the past 5 years; understands diabetes management and monitoring; and has stable control of her diabetes using insulin, and is able to drive a CMV safely. Ms. Cain meets the requirements of the vision standard at 49 CFR 391.41(b)(10). Her ophthalmologist examined her in 2006 and certified that she does not have diabetic retinopathy. She holds a Class B CDL from Indiana.

Roy B. Carter

Mr. Carter, 41, has had ITDM since 1983. His endocrinologist examined him in 2006 and certified that he has had no hypoglycemic reactions resulting in loss of consciousness, requiring the assistance of another person, or resulting in impaired cognitive function that occurred without warning in the past 5 years; understands diabetes management and monitoring; and has stable control of his diabetes using insulin, and is able to drive a CMV safely. Mr. Carter meets the requirements of the vision standard at 49 CFR 391.41(b)(10). His ophthalmologist examined him in 2006 and certified that he has stable nonproliferative diabetic retinopathy. He holds a Class C operator's license from Georgia.

Bradley D. Case

Mr. Case, 51, has had ITDM since 2004. His endocrinologist examined him in 2006 and certified that he has had no hypoglycemic reactions resulting in loss of consciousness, requiring the assistance of another person, or resulting in impaired cognitive function that occurred without warning in the past 5 years; understands diabetes management and monitoring; and has stable control of his diabetes using insulin, and is able to drive a CMV safely. Mr. Case meets the requirements of the vision standard at 49 CFR 391.41(b)(10). His optometrist examined him in 2006 and certified that he does not have diabetic retinopathy. He holds a Class B CDL from Indiana.

Jonathan M. Cleek

Mr. Cleek, 24, has had ITDM since 2001. His endocrinologist examined him in 2006 and certified that he has had no hypoglycemic reactions resulting in loss of consciousness, requiring the assistance of another person, or resulting in impaired cognitive function that occurred without warning in the past 5 years; understands diabetes management and monitoring; and has stable control of his diabetes using insulin, and is able to drive a CMV safely. Mr. Cleek meets the requirements of the vision standard at 49 CFR 391.41(b)(10). His ophthalmologist examined him in 2006 and certified that he does not have diabetic retinopathy. He holds a Class D operator's license from West Virginia.

David D. Collart

Mr. Collart, 42, has had ITDM since 1990. His endocrinologist examined him in 2006 and certified that he has had no hypoglycemic reactions resulting in loss of consciousness, requiring the assistance of another person, or resulting in impaired cognitive function that occurred without warning in the past 5 years; understands diabetes management and monitoring; and has stable control of his diabetes using insulin, and is able to drive a CMV safely. Mr. Collart meets the requirements of the vision standard at 49 CFR 391.41(b)(10). His ophthalmologist examined him in 2006 and certified that he has stable nonproliferative diabetic retinopathy. He holds an operator's license from Washington.

Donald L. Cowan

Mr. Cowan, 38, has had ITDM since 1999. His endocrinologist examined him in 2006 and certified that he has had no hypoglycemic reactions resulting in loss of consciousness, requiring the assistance of another person, or resulting in impaired cognitive function that occurred without warning in the past 5 years; understands diabetes management and monitoring; and has stable control of his diabetes using insulin, and is able to drive a CMV safely. Mr. Cowan meets the requirements of the vision standard at 49 CFR 391.41(b)(10). His optometrist examined him in 2006 and certified that he does not have diabetic retinopathy.

He holds a Class D operator's license from Ohio.

Michael J. Drake

Mr. Drake, 51, has had ITDM since 2004. His endocrinologist examined him in 2006 and certified that he has had no hypoglycemic reactions resulting in loss of consciousness, requiring the assistance of another person, or resulting in impaired cognitive function that occurred without warning in the past 5 years; understands diabetes management and monitoring; and has stable control of his diabetes using insulin, and is able to drive a CMV safely. Mr. Drake meets the requirements of the vision standard at 49 CFR 91.41(b)(10). His optometrist examined him in 2006 and certified that he does not have diabetic retinopathy. He holds a Class A CDL from Ohio.

Thomas D. Dyke

Mr. Dyke, 62, has had ITDM since 2005. His endocrinologist examined him in 2006 and certified that he has had no hypoglycemic reactions resulting in loss of consciousness, requiring the assistance of another person, or resulting in impaired cognitive function that occurred without warning in the past 5 years; understands diabetes management and monitoring; and has stable control of his diabetes using insulin, and is able to drive a CMV safely. Mr. Dyke meets the requirements of the vision standard at 49 CFR 391.41(b)(10). His ophthalmologist examined him in 2006 and certified that he does not have diabetic retinopathy. He holds a Class A CDL from Kansas.

Glenn D. Folkers

Mr. Folkers, 40, has had ITDM since 2000. His endocrinologist examined him in 2006 and certified that he has had no hypoglycemic reactions resulting in loss of consciousness, requiring the assistance of another person, or resulting in impaired cognitive function that occurred without warning in the past 5 years; understands diabetes management and monitoring; and has stable control of his diabetes using insulin, and is able to drive a CMV safely. Mr. Folkers meets the requirements of the vision standard at 49 CFR 391.41(b)(10). His optometrist examined him in 2006 and certified that he does not have diabetic retinopathy. He holds a Class B CDL from Nevada.

Anthony L. Gentry

Mr. Gentry, 35, has had ITDM since 2005. His endocrinologist examined him in 2006 and certified that he has had no hypoglycemic reactions resulting in loss of consciousness, requiring the assistance of another person, or resulting in impaired cognitive function that occurred without warning in the past 5 years; understands diabetes management and monitoring; and has stable control of his diabetes using insulin, and is able to drive a CMV safely. Mr. Gentry meets the requirements of the vision standard at 49 CFR 391.41(b)(10). His optometrist examined him in 2006 and certified that he does not have diabetic retinopathy. He holds a Class A CDL from Nebraska.

Howard L. Gocke

Mr. Gocke, 58, has had ITDM since 2002. His endocrinologist examined him in 2006 and certified that he has had no hypoglycemic reactions resulting in loss of consciousness, requiring the assistance of another person, or resulting in impaired cognitive function that occurred without warning in the past 5 years; understands diabetes management and monitoring; and has stable control of his diabetes using insulin, and is able to drive a CMV safely. Mr. Gocke meets the requirements of the vision standard at 49 CFR 391.41(b)(10). His optometrist examined him in 2006 and certified that he does not have diabetic retinopathy. He holds a Class A CDL from Washington.

James S. Goldman

Mr. Goldman, 57, has had ITDM since 2000. His endocrinologist examined him in 2006 and certified that he has had no hypoglycemic reactions resulting in loss of consciousness, requiring the assistance of another person, or resulting in impaired cognitive function that occurred without warning in the past 5 years; understands diabetes management and monitoring; and has stable control of his diabetes using insulin, and is able to drive a CMV safely. Mr. Goldman meets the requirements of the vision standard at 49 CFR 391.41(b)(10). His optometrist examined him in 2006 and certified that he does not have diabetic retinopathy. He holds a Class B CDL from Pennsylvania.

Carol D. Hardin

Ms. Hardin, 57, has had ITDM since 2000. Her endocrinologist examined her in 2006 and certified that she has had no hypoglycemic reactions resulting in loss of consciousness, requiring the assistance of another person, or resulting in impaired cognitive function that occurred without warning in the past 5 years; understands diabetes management and monitoring; and has stable control of her diabetes using insulin, and is able to drive a CMV safely. Ms. Hardin meets the requirements of the vision standard at 49 CFR 391.41(b)(10). Her optometrist examined her in 2005 and certified that she does not have diabetic retinopathy. She holds a Class B CDL from Mississippi.

Jerry Hardy

Mr. Hardy, 54, has had ITDM since 1992. His endocrinologist examined him in 2006 and certified that he has had no hypoglycemic reactions resulting in loss of consciousness, requiring the assistance of another person, or resulting in impaired cognitive function that occurred without warning in the past 5 years; understands diabetes management and monitoring; and has stable control of his diabetes using insulin, and is able to drive a CMV safely. Mr. Hardy meets the requirements of the vision standard at 49 CFR 391.41(b)(10). His ophthalmologist examined him in 2006 and certified that he does not have diabetic retinopathy. He holds a Class D operator's license from Illinois.

Michael T. Hartley

Mr. Hartley, 50, has had ITDM since 2005. His endocrinologist examined him in 2006 and certified that he has had no hypoglycemic reactions resulting in loss of consciousness, requiring the assistance of another person, or resulting in impaired cognitive function that occurred without warning in the past 5 years; understands diabetes management and monitoring; and has stable control of his diabetes using insulin, and is able to drive a CMV safely. Mr. Hartley meets the requirements of the vision standard at 49 CFR 391.41(b)(10). His ophthalmologist examined him in 2006 and certified that he does not have diabetic retinopathy. He holds a Class B CDL from Kentucky.

David A. Heider

Mr. Heider, 44, has had ITDM since 2005. His endocrinologist examined him in 2006 and certified that he has had no hypoglycemic reactions resulting in loss of consciousness, requiring the assistance of another person, or resulting in impaired cognitive function that occurred without warning in the past 5 years; understands diabetes management and monitoring; and has stable control of his diabetes using insulin, and is able to drive a CMV safely. Mr. Heider meets the requirements of the vision standard at 49 CFR 391.41(b)(10). His optometrist examined him in 2006 and certified that he does not have diabetic retinopathy.

He holds a Class A CDL from Wisconsin.

John A. Helm

Mr. Helm, 48, has had ITDM since 1991. His endocrinologist examined him in 2006 and certified that he has had no hypoglycemic reactions resulting in loss of consciousness, requiring the assistance of another person, or resulting in impaired cognitive function that occurred without warning in the past 5 years; understands diabetes management and monitoring; and has stable control of his diabetes using insulin, and is able to drive a CMV safely. Mr. Helm meets the requirements of the vision standard at 49 CFR 391.41(b)(10). His optometrist examined him in 2006 and certified that he does not have diabetic retinopathy. He holds a Class B operator's license from Illinois.

John A. Herbert

Mr. Herbert, 51, has had ITDM since 2004. His endocrinologist examined him in 2006 and certified that he has had no hypoglycemic reactions resulting in loss of consciousness, requiring the assistance of another person, or resulting in impaired cognitive function that occurred without warning in the past 5 years; understands diabetes management and monitoring; and has stable control of his diabetes using insulin, and is able to drive a CMV safely. Mr. Herbert meets the requirements of the vision standard at 49 CFR 391.41(b)(10). His ophthalmologist examined him in 2006 and certified that he has does not have diabetic retinopathy. He holds a Class A CDL from New Jersey.

Lester H. Hughes

Mr. Hughes, 46, has had ITDM since 1996. His endocrinologist examined him in 2006 and certified that he has had no hypoglycemic reactions resulting in loss of consciousness, requiring the assistance of another person, or resulting in impaired cognitive function that occurred without warning in the past 5 years; understands diabetes management and monitoring; and has stable control of his diabetes using insulin, and is able to drive a CMV safely. Mr. Hughes meets the requirements of the vision standard at 49 CFR 391.41(b)(10). His ophthalmologist examined him in 2006 and certified that he does not have diabetic retinopathy. He holds a Class A CDL from Virginia.

Gayle E. Jones

Mr. Jones, 29, has had ITDM since 2003. His endocrinologist examined him in 2006 and certified that he has had no hypoglycemic reactions resulting in loss of consciousness, requiring the assistance of another person, or resulting in impaired cognitive function that occurred without warning in the past 5 years; understands diabetes management and monitoring; and has stable control of his diabetes using insulin, and is able to drive a CMV safely. Mr. Jones meets the requirements of the vision standard at 49 CFR 391.41(b)(10). His optometrist examined him in 2006 and certified that he does not have diabetic retinopathy. He holds a Class A CDL from Iowa.

Gerald P. Kargus

Mr. Kargus, 53, has had ITDM since 1983. His endocrinologist examined him in 2006 and certified that he has had no hypoglycemic reactions resulting in loss of consciousness, requiring the assistance of another person, or resulting in impaired cognitive function that occurred without warning in the past 5 years; understands diabetes management and monitoring; and has stable control of his diabetes using insulin, and is able to drive a CMV safely. Mr. Kargus meets the requirements of the vision standard at 49 CFR 391.41(b)(10). His optometrist examined him in 2006 and certified that he does not have diabetic retinopathy. He holds a Class D operator's license from Wisconsin.

Christopher A. Knott

Mr. Knott, 45, has had ITDM since 2004. His endocrinologist examined him in 2006 and certified that he has had no hypoglycemic reactions resulting in loss of consciousness, requiring the assistance of another person, or resulting in impaired cognitive function that occurred without warning in the past 5 years; understands diabetes management and monitoring; and has stable control of his diabetes using insulin, and is able to drive a CMV safely. Mr. Knott meets the requirements of the vision standard at 49 CFR 391.41(b)(10). His optometrist examined him in 2006 and certified that he does not have diabetic retinopathy. He holds a Class A CDL from Minnesota.

Norman L. Krietemeyer

Mr. Krietemeyer, 60, has had ITDM since 1995. His endocrinologist examined him in 2005 and certified that he has had no hypoglycemic reactions resulting in loss of consciousness, requiring the assistance of another person, or resulting in impaired cognitive function that occurred without warning in the past 5 years; understands diabetes management and monitoring; and has stable control of his diabetes using insulin, and is able to drive a CMV safely. Mr. Krietemeyer meets the requirements of the vision standard at 49 CFR 391.41(b)(10). His ophthalmologist examined him in 2006 and certified that he has stable nonproliferative diabetic retinopathy. He holds a Class B CDL from Indiana.

Jerome A. Krupka

Mr. Krupka, 62, has had ITDM since 2006. His endocrinologist examined him in 2006 and certified that he has had no hypoglycemic reactions resulting in loss of consciousness, requiring the assistance of another person, or resulting in impaired cognitive function that occurred without warning in the past 5 years; understands diabetes management and monitoring; and has stable control of his diabetes using insulin, and is able to drive a CMV safely. Mr. Krupka meets the requirements of the vision standard at 49 CFR 391.41(b)(10). His ophthalmologist examined him in 2006 and certified that he has stable nonproliferative diabetic retinopathy. He holds a Class B CDL from Wisconsin.

James A. Kunkel

Mr. Kunkel, 31, has had ITDM since 2003. His endocrinologist examined him in 2006 and certified that he has had no hypoglycemic reactions resulting in loss of consciousness, requiring the assistance of another person, or resulting in impaired cognitive function that occurred without warning in the past 5 years; understands diabetes management and monitoring; and has stable control of his diabetes using insulin, and is able to drive a CMV safely. Mr. Kunkel meets the requirements of the vision standard at 49 CFR 391.41(b)(10). His optometrist examined him in 2006 and certified that he does not have diabetic retinopathy. He holds a Class A CDL from Minnesota.

Mark W. Lavorini

Mr. Lavorini, 35, has had ITDM since 1978. His endocrinologist examined him in 2006 and certified that he has had no hypoglycemic reactions resulting in loss of consciousness, requiring the assistance of another person, or resulting in impaired cognitive function that occurred without warning in the past 5 years; understands diabetes management and monitoring; and has stable control of his diabetes using insulin, and is able to drive a CMV safely. Mr. Lavorini meets the requirements of the vision standard at 49 CFR 391.41(b)(10). His ophthalmologist examined him in 2006

and certified that he has stable nonproliferative diabetic retinopathy. He holds a Class C operator's license from Pennsylvania.

Jeffrey C. Link

Mr. Link, 23, has had ITDM since 2002. His endocrinologist examined him in 2006 and certified that he has had no hypoglycemic reactions resulting in loss of consciousness, requiring the assistance of another person, or resulting in impaired cognitive function that occurred without warning in the past 5 years; understands diabetes management and monitoring; and has stable control of his diabetes using insulin, and is able to drive a CMV safely. Mr. Link meets the requirements of the vision standard at 49 CFR 391.41(b)(10). His optometrist examined him in 2006 and certified that he does not have diabetic retinopathy. He holds a Class D operator's license from South Carolina.

Londell W. Luther

Mr. Luther, 27, has had ITDM since 1990. His endocrinologist examined him in 2006 and certified that he has had no hypoglycemic reactions resulting in loss of consciousness, requiring the assistance of another person, or resulting in impaired cognitive function that occurred without warning in the past 5 years; understands diabetes management and monitoring; and has stable control of his diabetes using insulin, and is able to drive a CMV safely. Mr. Luther meets the requirements of the vision standard at 49 CFR 391.41(b)(10). His ophthalmologist examined him in 2006 and certified that he has stable nonproliferative diabetic retinopathy. He holds a Class C operator's license from Maryland.

Harry E. Marsh

Mr. Marsh, 59, has had ITDM since 2006. His endocrinologist examined him in 2006 and certified that he has had no hypoglycemic reactions resulting in loss of consciousness, requiring the assistance of another person, or resulting in impaired cognitive function that occurred without warning in the past 5 years; understands diabetes management and monitoring; and has stable control of his diabetes using insulin, and is able to drive a CMV safely. Mr. Marsh meets the requirements of the vision standard at 49 CFR 391.41(b)(10). His ophthalmologist examined him in 2006 and certified that he has stable nonproliferative diabetic retinopathy. He holds a Class A CDL from Ohio.

Mr. McMasters, 49, has had ITDM since 1974. His endocrinologist examined him in 2006 and certified that he has had no hypoglycemic reactions resulting in loss of consciousness, requiring the assistance of another person, or resulting in impaired cognitive function that occurred without warning in the past 5 years; understands diabetes management and monitoring; and has stable control of his diabetes using insulin, and is able to drive a CMV safely. Mr. McMasters meets the requirements of the vision standard at 49 CFR 391.41(b)(10). His ophthalmologist examined him in 2006 and certified that he does not have diabetic retinopathy. He holds a Class A CDL from Indiana.

George R. McMullen

Mr. McMullen, 65, has had ITDM since 1996. His endocrinologist examined him in 2006 and certified that he has had no hypoglycemic reactions resulting in loss of consciousness, requiring the assistance of another person, or resulting in impaired cognitive function that occurred without warning in the past 5 years; understands diabetes management and monitoring; and has stable control of his diabetes using insulin, and is able to drive a CMV safely. Mr. McMullen meets the requirements of the vision standard at 49 CFR 391.41(b)(10). His ophthalmologist examined him in 2006 and certified that he does not have diabetic retinopathy. He holds a Class A CDL from Minnesota.

James B. Morris

Mr. Morris, 62, has had ITDM since 1993. His endocrinologist examined him in 2006 and certified that he has had no hypoglycemic reactions resulting in loss of consciousness, requiring the assistance of another person, or resulting in impaired cognitive function that occurred without warning in the past 5 years; understands diabetes management and monitoring; and has stable control of his diabetes using insulin, and is able to drive a CMV safely. Mr. Morris meets the requirements of the vision standard at 49 CFR 391.41(b)(10). His optometrist examined him in 2006 and certified that he does not have diabetic retinopathy. He holds a Class C operator's license from Georgia.

Bradley S. Mowdy

Mr. Mowdy, 48, has had ITDM since 2004. His endocrinologist examined him in 2006 and certified that he has had no hypoglycemic reactions resulting in loss of consciousness, requiring the assistance of another person, or resulting in impaired cognitive function that occurred without warning in the past 5 years; understands diabetes management and monitoring; and has stable control of his diabetes using insulin, and is able to drive a CMV safely. Mr. Mowdy meets the requirements of the vision standard at 49 CFR 391.41(b)(10). His optometrist examined him in 2006 and certified that he does not have diabetic retinopathy. He holds a Class C operator's license from California.

James R. Murphy

Mr. Murphy, 61, has had ITDM since 2004. His endocrinologist examined him in 2006 and certified that he has had no hypoglycemic reactions resulting in loss of consciousness, requiring the assistance of another person, or resulting in impaired cognitive function that occurred without warning in the past 5 years; understands diabetes management and monitoring; has stable control of his diabetes using insulin, and is able to drive a CMV safely. Mr. Murphy meets the requirements of the vision standard at 49 CFR 391.41(b)(10). His optometrist examined him in 2006 and certified that he does not have diabetic retinopathy. He holds a Class B CDL from Colorado.

Ronald W. Nelson

Mr. Nelson, 52, has had ITDM since 1997. His endocrinologist examined him in 2006 and certified that he has had no hypoglycemic reactions resulting in loss of consciousness, requiring the assistance of another person, or resulting in impaired cognitive function that occurred without warning in the past 5 years; understands diabetes management and monitoring; and has stable control of his diabetes using insulin, and is able to drive a CMV safely. Mr. Nelson meets the requirements of the vision standard at 49 CFR 391.41(b)(10). His ophthalmologist examined him in 2006 and certified that he does not have diabetic retinopathy. He holds a Class A CDL from Minnesota.

Vincent A. Palumbo

Mr. Palumbo, 52, has had ITDM since 1994. His endocrinologist examined him in 2006 and certified that he has had no hypoglycemic reactions resulting in loss of consciousness, requiring the assistance of another person, or resulting in impaired cognitive function that occurred without warning in the past 5 years; understands diabetes management and monitoring; and has stable control of his diabetes using insulin, and is able to drive a CMV safely. Mr. Palumbo meets the

requirements of the vision standard at 49 CFR 391.41(b)(10). His ophthalmologist examined him in 2005 and certified that he has stable nonproliferative diabetic retinopathy. He holds a Class D operator's license from New York.

Kent E. Pelkey

Mr. Pelkey, 42, has had ITDM since 1979. His endocrinologist examined him in 2005 and certified that he has had no hypoglycemic reactions resulting in loss of consciousness, requiring the assistance of another person, or resulting in impaired cognitive function that occurred without warning in the past 5 years; understands diabetes management and monitoring; has stable control of his diabetes using insulin, and is able to drive a CMV safely. Mr. Pelkey meets the requirements of the vision standard at 49 CFR 391.41(b)(10). His ophthalmologist examined him in 2005 and certified that he has stable proliferative diabetic retinopathy. He holds a Class A CDL from Maine.

Keith E. Peterson

Mr. Peterson, 36, has had ITDM since 2006. His endocrinologist examined him in 2006 and certified that he has had no hypoglycemic reactions resulting in loss of consciousness, requiring the assistance of another person, or resulting in impaired cognitive function that occurred without warning in the past 5 years; understands diabetes management and monitoring; and has stable control of his diabetes using insulin, and is able to drive a CMV safely. Mr. Peterson meets the requirements of the vision standard at 49 CFR 391.41(b)(10). His optometrist examined him in 2006 and certified that he does not have diabetic retinopathy. He holds a Class A CDL from North Dakota.

Victor C. Port

Mr. Port, 45, has had ITDM since 1974. His endocrinologist examined him in 2006 and certified that he has had no hypoglycemic reactions resulting in loss of consciousness, requiring the assistance of another person, or resulting in impaired cognitive function that occurred without warning in the past 5 years; understands diabetes management and monitoring; and has stable control of his diabetes using insulin, and is able to drive a CMV safely. Mr. Port meets the requirements of the vision standard at 49 CFR 391.41(b)(10). His ophthalmologist examined him in 2006 and certified that he has stable nonproliferative diabetic retinopathy. He holds a Class A CDL from North Dakota.

Lee F. Powell

Mr. Powell, 60, has had ITDM since 2005. His endocrinologist examined him in 2006 and certified that he has had no hypoglycemic reactions resulting in loss of consciousness, requiring the assistance of another person, or resulting in impaired cognitive function that occurred without warning in the past 5 years; understands diabetes management and monitoring; and has stable control of his diabetes using insulin, and is able to drive a CMV safely. Mr. Powell meets the requirements of the vision standard at 49 CFR 391.41(b)(10). His ophthalmologist examined him in 2006 and certified that he does not have diabetic retinopathy. He holds a Class A CDL from Massachusetts.

Allen W. Quon

Mr. Quon, 44, has had ITDM since 2006. His endocrinologist examined him in 2006 and certified that he has had no hypoglycemic reactions resulting in loss of consciousness, requiring the assistance of another person, or resulting in impaired cognitive function that occurred without warning in the past 5 years; understands diabetes management and monitoring; and has stable control of his diabetes using insulin, and is able to drive a CMV safely. Mr. Quon meets the requirements of the vision standard at 49 CFR 391.41(b)(10). His optometrist examined him in 2006 and certified that he does not have diabetic retinopathy. He holds a Class A CDL from Maryland.

Armand O. Rondeau

Mr. Rondeau, 65, has had ITDM since 2004. His endocrinologist examined him in 2005 and certified that he has had no hypoglycemic reactions resulting in loss of consciousness, requiring the assistance of another person, or resulting in impaired cognitive function that occurred without warning in the past 5 years; understands diabetes management and monitoring; and has stable control of his diabetes using insulin, and is able to drive a CMV safely. Mr. Rondeau meets the requirements of the vision standard at 49 CFR 391.41(b)(10). His ophthalmologist examined him in 2005 and certified that he has stable nonproliferative diabetic retinopathy. He holds a Class B CDL from Massachusetts.

Carl J. Satariano

Mr. Satariano, 59, has had ITDM since 2005. His endocrinologist examined him in 2006 and certified that he has had no hypoglycemic reactions resulting in loss of consciousness, requiring the assistance of another person, or resulting in impaired cognitive function that occurred without warning in the past 5 years; understands diabetes management and monitoring; and has stable control of his diabetes using insulin, and is able to drive a CMV safely. Mr. Satariano meets the requirements of the vision standard at 49 CFR 391.41(b)(10). His optometrist examined him in 2006 and certified that he does not have diabetic retinopathy. He holds a Class B CDL from California.

Randall W. Skaggs

Mr. Skaggs, 47, has had ITDM since 2004. His endocrinologist examined him in 2006 and certified that he has had no hypoglycemic reactions resulting in loss of consciousness, requiring the assistance of another person, or resulting in impaired cognitive function that occurred without warning in the past 5 years; understands diabetes management and monitoring; and has stable control of his diabetes using insulin, and is able to drive a CMV safely. Mr. Skaggs meets the requirements of the vision standard at 49 CFR 391.41(b)(10). His optometrist examined him in 2006 and certified that he does not have diabetic retinopathy. He holds a Class A CDL from Kentucky.

Louis L. Sorenson

Mr. Sorenson, 48, has had ITDM since 1996. His endocrinologist examined him in 2006 and certified that he has had no hypoglycemic reactions resulting in loss of consciousness, requiring the assistance of another person, or resulting in impaired cognitive function that occurred without warning in the past 5 years; understands diabetes management and monitoring; and has stable control of his diabetes using insulin, and is able to drive a CMV safely. Mr. Sorenson meets the requirements of the vision standard at 49 CFR 391.41(b)(10). His ophthalmologist examined him in 2006 and certified that he does not have diabetic retinopathy. He holds a Class D operator's license from Minnesota.

James L. Spencer

Mr. Spencer, 53, has had ITDM since 1973. His endocrinologist examined him in 2006 and certified that he has had no hypoglycemic reactions resulting in loss of consciousness, requiring the assistance of another person, or resulting in impaired cognitive function that occurred without warning in the past 5 years; understands diabetes management and monitoring; and has stable control of his diabetes using insulin, and is able to drive a CMV safely. Mr. Spencer meets the

requirements of the vision standard at 49 CFR 391.41(b)(10). His ophthalmologist examined him in 2006 and certified that he has stable nonproliferative diabetic retinopathy. He holds a Class D operator's license from Delaware.

Ronald D. Stewart

Mr. Stewart, 51, has had ITDM since 1999. His endocrinologist examined him in 2006 and certified that he has had no hypoglycemic reactions resulting in loss of consciousness, requiring the assistance of another person, or resulting in impaired cognitive function that occurred without warning in the past 5 years; understands diabetes management and monitoring; and has stable control of his diabetes using insulin, and is able to drive a CMV safely. Mr. Stewart meets the requirements of the vision standard at 49 CFR 391.41(b)(10). His ophthalmologist examined him in 2006 and certified that he does not have diabetic retinopathy. He holds a Class A CDL from Tennessee.

Andy L. Strommenger

Mr. Strommenger, 29, has had ITDM since 1987. His endocrinologist examined him in 2006 and certified that he has had no hypoglycemic reactions resulting in loss of consciousness, requiring the assistance of another person, or resulting in impaired cognitive function that occurred without warning in the past 5 years; understands diabetes management and monitoring; and has stable control of his diabetes using insulin, and is able to drive a CMV safely. Mr. Strommenger meets the requirements of the vision standard at 49 CFR 391.41(b)(10). His optometrist examined him in 2006 and certified that he does not have diabetic retinopathy. He holds a Class A CDL from Colorado.

Richard J. Symonies, Sr.

Mr. Symonies, 59, has had ITDM since 1993. His endocrinologist examined him in 2006 and certified that he has had no hypoglycemic reactions resulting in loss of consciousness, requiring the assistance of another person, or resulting in impaired cognitive function that occurred without warning in the past 5 years; understands diabetes management and monitoring; and has stable control of his diabetes using insulin, and is able to drive a CMV safely. Mr. Symonies meets the requirements of the vision standard at 49 CFR 391.41(b)(10). His optometrist examined him in 2006 and certified that he does not have diabetic retinopathy. He holds a Class A CDL from Pennsylvania.

Douglas K. Thompson

Mr. Thompson, 38, has had ITDM since 1999. His endocrinologist examined him in 2006 and certified that he has had no hypoglycemic reactions resulting in loss of consciousness, requiring the assistance of another person, or resulting in impaired cognitive function that occurred without warning in the past 5 years; understands diabetes management and monitoring; and has stable control of his diabetes using insulin, and is able to drive a CMV safely. Mr. Thompson meets the requirements of the vision standard at 49 CFR 391.41(b)(10). His ophthalmologist examined him in 2006 and certified that he has does not have diabetic retinopathy. He holds a class O operator's license from Michigan.

Richard L. Thompson

Mr. Thompson, 54, has had ITDM since 1984. His endocrinologist examined him in 2006 and certified that he has had no hypoglycemic reactions resulting in loss of consciousness, requiring the assistance of another person, or resulting in impaired cognitive function that occurred without warning in the past 5 years; understands diabetes management and monitoring; and has stable control of his diabetes using insulin, and is able to drive a CMV safely. Mr. Thompson meets the requirements of the vision standard at 49 CFR 391.41(b)(10). His ophthalmologist examined him in 2006 and certified that he does not have diabetic retinopathy. He holds a Class B CDL from North Dakota.

James L. Tjon

Mr. Tjon, 52, has had ITDM since 1968. His endocrinologist examined him in 2006 and certified that he has had no hypoglycemic reactions resulting in loss of consciousness, requiring the assistance of another person, or resulting in impaired cognitive function that occurred without warning in the past 5 years; understands diabetes management and monitoring; and has stable control of his diabetes using insulin, and is able to drive a CMV safely. Mr. Tjon meets the requirements of the vision standard at 49 CFR 391.41(b) (10). His optometrist examined him in 2006 and certified that he does not have diabetic retinopathy. He holds a Class A CDL from Minnesota.

Lowell T. Tucker

Mr. Tucker, 69, has had ITDM since 2000. His endocrinologist examined him in 2006 and certified that he has had no hypoglycemic reactions resulting in loss of consciousness, requiring the assistance of another person, or resulting in impaired cognitive function that occurred without warning in the past 5 years; understands diabetes management and monitoring; and has stable control of his diabetes using insulin, and is able to drive a CMV safely. Mr. Tucker meets the requirements of the vision standard at 49 CFR 391.41(b)(10). His ophthalmologist examined him in 2006 and certified that he does not have diabetic retinopathy. He holds a Class A CDL from Kansas.

Shawn P. Wathley

Mr. Wathley, 40, has had ITDM since 2005. His endocrinologist examined him in 2006 and certified that he has had no hypoglycemic reactions resulting in loss of consciousness, requiring the assistance of another person, or resulting in impaired cognitive function that occurred without warning in the past 5 years; understands diabetes management and monitoring; and has stable control of his diabetes using insulin, and is able to drive a CMV safely. Mr. Wathley meets the requirements of the vision standard at 49 CFR 391.41(b)(10). His optometrist examined him in 2006 and certified that he does not have diabetic retinopathy. He holds a Class A CDL from Connecticut.

John P. Westbay

Mr. Westbay, 48, has had ITDM since 1987. His endocrinologist examined him in 2006 and certified that he has had no hypoglycemic reactions resulting in loss of consciousness, requiring the assistance of another person, or resulting in impaired cognitive function that occurred without warning in the past 5 years; understands diabetes management and monitoring; and has stable control of his diabetes using insulin, and is able to drive a CMV safely. Mr. Westbay meets the requirements of the vision standard at 49 CFR 391.41(b)(10). His ophthalmogist examined him in 2006 and certified that he does not have diabetic retinopathy. He holds a Class B CDL from New York.

John M. White

Mr. White, 50, has had ITDM since 1981. His endocrinologist examined him in 2006 and certified that he has had no hypoglycemic reactions resulting in loss of consciousness, requiring the assistance of another person, or resulting in impaired cognitive function that occurred without warning in the past 5 years; understands diabetes management and monitoring; and has stable control of his diabetes using insulin, and is able to drive a CMV

safely. Mr. White meets the requirements of the vision standard at 49 CFR 391.41(b)(10). His ophthalmologist examined him in 2006 and certified that he has stable nonproliferative diabetic retinopathy. He holds a Class O operator's license from Nebraska, which allows him drive any non-commercial vehicle except a motorcycle.

Jeffrey M. Wood

Mr. Wood, 50, has had ITDM since 2000. His endocrinologist examined him in 2006 and certified that he has had no hypoglycemic reactions resulting in loss of consciousness, requiring the assistance of another person, or resulting in impaired cognitive function that occurred without warning in the past 5 years; understands diabetes management and monitoring; and has stable control of his diabetes using insulin, and is able to drive a CMV safely. Mr. Wood meets the requirements of the vision standard at 49 CFR 391.41(b)(10). His ophthalmologist examined him in 2006 and certified that he has stable nonproliferative diabetic retinopathy. He holds a Class A CDL from Illinois.

Christopher T. Worsley

Mr. Worsley, 29, has had ITDM since 2002. His endocrinologist examined him in 2006 and certified that he has had no hypoglycemic reactions resulting in loss of consciousness, requiring the assistance of another person, or resulting in impaired cognitive function that occurred without warning in the past 5 years; understands diabetes management and monitoring; and has stable control of his diabetes using insulin, and is able to drive a CMV safely. Mr. Worsley meets the requirements of the vision standard at 49 CFR 391.41(b)(10). His ophthalmologist examined him in 2006 and certified that he does not have diabetic retinopathy. He holds a Class A CDL from Massachusetts.

Fredrick J. Young

Mr. Young, 37, has had ITDM since 2005. His endocrinologist examined him in 2005 and certified that he has had no hypoglycemic reactions resulting in loss of consciousness, requiring the assistance of another person, or resulting in impaired cognitive function that occurred without warning in the past 5 years; understands diabetes management and monitoring; and has stable control of his diabetes using insulin, and is able to drive a CMV safely. Mr. Young meets the requirements of the vision standard at 49 CFR 391.41(b)(10). His optometrist examined him in 2006 and certified that he does not have diabetic retinopathy. He holds a Class A CDL from Virginia.

Request for Comments

In accordance with 49 U.S.C. 31136(e) and 31315, FMCSA requests public comment from all interested persons on the exemption petitions described in this Notice. We will consider all comments received before the close of business on the closing date indicated earlier in the Notice.

FMCSA notes that Section 4129 of the Safe, Accountable, Flexible and Efficient Transportation Equity Act: A Legacy for Users (SAFETEA–LU) requires the Secretary to revise its diabetes exemption program established on September 3, 2003 (68 FR 52441).[1] The revision must provide for individual assessment of drivers with diabetes mellitus, and be consistent with the criteria described in section 4018 of the Transportation Equity Act for the 21st Century (49 U.S.C. 31305).

Section 4129 requires: (1) The elimination of the requirement for three years of experience operating CMVs while being treated with insulin; and (2) the establishment of a specified minimum period of insulin use to demonstrate stable control of diabetes before being allowed to operate a CMV.

In response to section 4129, FMCSA made immediate revisions to the diabetes exemption program established by the September 3, 2003 Notice. FMCSA discontinued use of the 3-year driving experience and fulfilled the requirements of section 4129 while continuing to ensure that operation of CMVs by drivers with ITDM will achieve the requisite level of safety required of all exemptions granted under 49 U.S.C. 31136(e).

Section 4129(d) also directed FMCSA to ensure that drivers of CMVs with ITDM are not held to a higher standard than other drivers, with the exception of limited operating, monitoring and medical requirements that are deemed medically necessary. FMCSA concluded that all of the operating, monitoring and medical requirements set out in the September 3, 2003 Notice, except as modified, were in compliance with section 4129(d). Therefore, all of the requirements set out in the September 3, 2003 Notice, except as modified in the Notice in the **Federal Register** on November 8, 2005 (70 FR 67777), remain in effect.

[1] Section 4129(a) refers to the 2003 Notice as a ''final rule.'' However, the 2003 Notice did not issue a ''final rule,'' but did establish the procedures and standards for issuing exemptions for drivers with ITDM.

Issued on: December 5, 2006.

Rose A. McMurry,

Associate Administrator, Policy and Program Development.

[FR Doc. E6–21136 Filed 12–12–06; 8:45 am]

BILLING CODE 4910–EX–P

DEPARTMENT OF TRANSPORTATION

National Highway Traffic Safety Administration

[Docket No. NHTSA–2006–26280; Notice 1]

The Braun Corporation, Receipt of Petition for Decision of Inconsequential Noncompliance

The Braun Corporation (Braun) has determined that certain wheelchair lifts it produced in 2005 through 2006 do not comply with S6.4.9 of 49 CFR 571.403, Federal Motor Vehicle Safety Standard (FMVSS) No. 403, ''Platform lift systems for motor vehicles.'' Braun has filed an appropriate report pursuant to 49 CFR Part 573, ''Defect and Noncompliance Reports.''

Pursuant to 49 U.S.C. 30118(d) and 30120(h), Braun has petitioned for an exemption from the notification and remedy requirements of 49 U.S.C. Chapter 301 on the basis that this noncompliance is inconsequential to motor vehicle safety.

This notice of receipt of Braun's petition is published under 49 U.S.C. 30118 and 30120 and does not represent any agency decision or other exercise of judgment concerning the merits of the petition.

Affected are a total of approximately 15,992 model NL, NCL, and NVL wheelchair lifts produced between April 1, 2005 and July 19, 2006. S6.4.9.7 of FMVSS No. 403 requires:

> When tested in accordance with S7.12.1, each handrail must withstand 445 N (100 pounds force) applied at any point and in any direction on the handrail without more than 22 mm (1 inch) of displacement relative to the platform surface. After removal of the load, the handrail must exhibit no permanent deformation.

In addition, S6.4.9.9 of FMVSS No. 403 requires:

> When tested in accordance with S7.12.2, each handrail must withstand 1,112 N (250 lbf) applied at any point and in any direction on the handrail without sustaining any failure, such as cracking, separation, fracture, or more than 100 mm (4 inches) of displacement of any point on the handrails relative to the platform surface.

The noncompliant lifts do not meet the displacement requirements of S6.4.9.7 and S6.4.9.9.

Braun believes that the noncompliance is inconsequential to

motor vehicle safety and that no corrective action is warranted. Braun states the following:

The non-complying wheelchair lifts continue to meet the requirements set forth in the Americans with Disabilities Act (ADA). In other words, they are able to withstand ''a force of 100 pounds concentrated at any point on the handrail without permanent deformation of the rail or its supporting structure.'' * * * The Braun Corporation has never received a claim or complaint of handrail failure resulting in an injury. * * * [T]he handrails have been utilized hundreds of millions, if not billions of times without incident. * * * [A]ny modifications, or upgrades imposed to ensure compliance with FMVSS 403 would appear to provide a statistically insignificant enhancement.''

Interested persons are invited to submit written data, views, and arguments on this petition. Comments must refer to the docket and notice number cited at the beginning of this notice and be submitted by any of the following methods. Mail: Docket Management Facility, U.S. Department of Transportation, Nassif Building, Room PL–401, 400 Seventh Street, SW., Washington, DC, 20590–0001. Hand Delivery: Room PL–401 on the plaza level of the Nassif Building, 400 Seventh Street, SW., Washington, DC. It is requested, but not required, that two copies of the comments be provided. The Docket Section is open on weekdays from 10 a.m. to 5 p.m. except Federal Holidays. Comments may be submitted electronically by logging onto the Docket Management System Web site at *http://dms.dot.gov.* Click on ''Help'' to obtain instructions for filing the document electronically. Comments may be faxed to 1–202–493–2251, or may be submitted to the Federal eRulemaking Portal: Go to *http://www.regulations.gov.* Follow the online instructions for submitting comments.

The petition, supporting materials, and all comments received before the close of business on the closing date indicated below will be filed and will be considered. All comments and supporting materials received after the closing date will also be filed and will be considered to the extent possible. When the petition is granted or denied, notice of the decision will be published in the **Federal Register** pursuant to the authority indicated below.

Comment closing date: January 12, 2007.

Authority: 49 U.S.C. 30118, 30120: delegations of authority at CFR 1.50 and 501.8

Dated: December 7, 2006.

Daniel C. Smith,

Associate Administrator for Enforcement.

[FR Doc. E6–21206 Filed 12–12–06; 8:45 am]

BILLING CODE 4910–59–P

DEPARTMENT OF TRANSPORTATION

National Highway Traffic Safety Administration

[Docket No. NHTSA–2006–26281; Notice 1]

The Braun Corporation, Receipt of Petition for Decision of Inconsequential Noncompliance

The Braun Corporation (Braun) has determined that certain wheelchair lifts it produced in 2005 through 2006 do not comply with S6.1.3 of 49 CFR 571.403, Federal Motor Vehicle Safety Standard (FMVSS) No. 403, ''Platform lift systems for motor vehicles.'' Braun has filed an appropriate report pursuant to 49 CFR Part 573, ''Defect and Noncompliance Reports.''

Pursuant to 49 U.S.C. 30118(d) and 30120(h), Braun has petitioned for an exemption from the notification and remedy requirements of 49 U.S.C. Chapter 301 on the basis that this noncompliance is inconsequential to motor vehicle safety.

This notice of receipt of Braun's petition is published under 49 U.S.C. 30118 and 30120 and does not represent any agency decision or other exercise of judgment concerning the merits of the petition.

Affected are a total of approximately 12,940 model NL, NCL, and NVL wheelchair lifts produced between July 6, 2005 and July 19, 2006. S6.1.3 of FMVSS No. 403 requires:

A visual and audible warning must activate if the platform is more than 25 mm (1 inch) below the platform threshold area and portions of a passenger's body or mobility aid is on the platform threshold area defined in S4 when tested in accordance with S7.4.

The threshold warning systems of the noncompliant lifts are unable to detect occupancy throughout the entire platform threshold area defined in S4. Braun has corrected the problem that caused these errors so that they will not be repeated in future production.

Braun believes that the noncompliance is inconsequential to motor vehicle safety and that no corrective action is warranted. Braun explains that ''the sensitivity of the system used to detect occupancy has been found to be diminished through the center of the threshold area.'' Braun states:

[I]t is virtually impossible for a wheelchair to transit the entire depth of the threshold warning area without triggering the warning. * * * [A] rolling wheelchair cannot conceivably get to an area of attenuated threshold sensitivity without first triggering the warning. In addition, the rolling wheelchair cannot conceivably roll off the outer end of the threshold warning area without again triggering the warning.

Interested persons are invited to submit written data, views, and arguments on this petition. Comments must refer to the docket and notice number cited at the beginning of this notice and be submitted by any of the following methods. Mail: Docket Management Facility, U.S. Department of Transportation, Nassif Building, Room PL–401, 400 Seventh Street, SW., Washington, DC, 20590–0001. Hand Delivery: Room PL–401 on the plaza level of the Nassif Building, 400 Seventh Street, SW., Washington, DC. It is requested, but not required, that two copies of the comments be provided. The Docket Section is open on weekdays from 10 am to 5 pm except Federal Holidays. Comments may be submitted electronically by logging onto the Docket Management System Web site at *http://dms.dot.gov*. Click on ''Help'' to obtain instructions for filing the document electronically. Comments may be faxed to 1–202–493–2251, or may be submitted to the Federal eRulemaking Portal: go to *http://www.regulations.gov*. Follow the online instructions for submitting comments.

The petition, supporting materials, and all comments received before the close of business on the closing date indicated below will be filed and will be considered. All comments and supporting materials received after the closing date will also be filed and will be considered to the extent possible. When the petition is granted or denied, notice of the decision will be published in the **Federal Register** pursuant to the authority indicated below.

Comment closing date: January 12, 2007.

Authority: 49 U.S.C. 30118, 30120: delegations of authority at CFR 1.50 and 501.8.

Dated: December 7, 2006.

Daniel C. Smith,

Associate Administrator for Enforcement.

[FR Doc. E6–21208 Filed 12–12–06; 8:45 am]

BILLING CODE 4910–59–P

DEPARTMENT OF TRANSPORTATION

National Highway Traffic Safety Administration

[Docket No. NHTSA–2006–26422; Notice 1]

Hankook Tire Company, Ltd., Receipt of Petition for Decision of Inconsequential Noncompliance

Hankook Tire Co., Ltd. (Hankook) has determined that certain tires that it produced in 2005 and 2006 do not comply with S5.5.5 of 49 CFR 571.139, Federal Motor Vehicle Safety Standard (FMVSS) No. 139, ''New pneumatic radial tires for light vehicles.'' Hankook has filed an appropriate report pursuant to 49 CFR Part 573, ''Defect and Noncompliance Reports.''

Pursuant to 49 U.S.C. 30118(d) and 30120(h), Hankook has petitioned for an exemption from the notification and remedy requirements of 49 U.S.C. Chapter 301 on the basis that this noncompliance is inconsequential to motor vehicle safety.

This notice of receipt of Hankook's petition is published under 49 U.S.C. 30118 and 30120 and does not represent any agency decision or other exercise of judgment concerning the merits of the petition.

Affected are a total of approximately 19,606 passenger car temporary spare tires produced between October 2005 and April 2006. S5.5.5. FMVSS No. 139 requires that the tires have a sidewall marking ''inflate to 420 kPa (60 psi)'' of no less than 12.7 mm high. In the marking on the noncompliant tires, the letters are 8 mm high. Hankook has corrected the problem that caused these errors so that they will not be repeated in future production.

Hankook believes that the noncompliance is inconsequential to motor vehicle safety and that no corrective action is warranted. Hankook states that the noncompliance ''affects consumer information only and does not affect safety of the tires.'' Hankook further states that the tires comply with all other FMVSS requirements.

Interested persons are invited to submit written data, views, and arguments on this petition. Comments must refer to the docket and notice number cited at the beginning of this notice and be submitted by any of the following methods. *Mail:* Docket Management Facility, U.S. Department of Transportation, Nassif Building, Room PL–401, 400 Seventh Street, SW., Washington, DC, 20590–0001. *Hand Delivery:* Room PL–401 on the plaza level of the Nassif Building, 400 Seventh Street, SW., Washington, DC. It is requested, but not required, that two copies of the comments be provided. The Docket Section is open on weekdays from 10 a.m. to 5 p.m. except Federal Holidays. Comments may be submitted electronically by logging onto the Docket Management System Web site at *http://dms.dot.gov.* Click on ''Help'' to obtain instructions for filing the document electronically. Comments may be faxed to 1–202–493–2251, or may be submitted to the Federal eRulemaking Portal: go to *http://www.regulations.gov.* Follow the online instructions for submitting comments.

The petition, supporting materials, and all comments received before the close of business on the closing date indicated below will be filed and will be considered. All comments and supporting materials received after the closing date will also be filed and will be considered to the extent possible. When the petition is granted or denied, notice of the decision will be published in the **Federal Register** pursuant to the authority indicated below.

Comment closing date: January 12, 2007.

(Authority: 49 U.S.C. 30118, 30120: delegations of authority at CFR 1.50 and 501.8)

Issued on: December 7, 2006.

Daniel C. Smith,

Associate Administrator for Enforcement.

[FR Doc. E6–21220 Filed 12–12–06; 8:45 am]

BILLING CODE 4910–59–P

DEPARTMENT OF TRANSPORTATION

National Highway Traffic Safety Administration

[Docket No. NHTSA–2006–26421; Notice 1]

Hankook Tire Company, Ltd., Receipt of Petition for Decision of Inconsequential Noncompliance

Hankook Tire Co., Ltd. (Hankook) has determined that certain tires that it produced in 2005 and 2006 do not comply with S5.5.5 of 49 CFR 571.139, Federal Motor Vehicle Safety Standard (FMVSS) No. 139, ''New pneumatic radial tires for light vehicles.'' Hankook has filed an appropriate report pursuant to 49 CFR part 573, ''Defect and Noncompliance Reports.''

Pursuant to 49 U.S.C. 30118(d) and 30120(h), Hankook has petitioned for an exemption from the notification and remedy requirements of 49 U.S.C. Chapter 301 on the basis that this noncompliance is inconsequential to motor vehicle safety.

This notice of receipt of Hankook's petition is published under 49 U.S.C. 30118 and 30120 and does not represent any agency decision or other exercise of judgment concerning the merits of the petition.

Affected are a total of approximately 283,815 passenger car temporary spare tires produced between January 2005 and September 2006. S5.5.5. FMVSS No. 139 requires that the tires have a sidewall marking ''inflate to 420 kPa (60 psi)'' of no less than 12.7 mm high. In the marking on the noncompliant tires, the letters ''a'' and ''s'' are 12.3 mm and 11.9 mm high respectively. Hankook has corrected the problem that caused these errors so that they will not be repeated in future production.

Hankook believes that the noncompliance is inconsequential to motor vehicle safety and that no corrective action is warranted. Hankook states that the noncompliance ''affects consumer information only and does not affect safety of the tires.'' Hankook further states that the tires comply with all other FMVSS requirements.

Interested persons are invited to submit written data, views, and arguments on this petition. Comments must refer to the docket and notice number cited at the beginning of this notice and be submitted by any of the following methods. *Mail:* Docket Management Facility, U.S. Department of Transportation, Nassif Building, Room PL–401, 400 Seventh Street, SW., Washington, DC, 20590–0001. *Hand Delivery:* Room PL–401 on the plaza level of the Nassif Building, 400 Seventh Street, SW., Washington, DC. It is requested, but not required, that two copies of the comments be provided. The Docket Section is open on weekdays from 10 a.m. to 5 p.m. except Federal holidays. Comments may be submitted electronically by logging onto the Docket Management System Web site at *http://dms.dot.gov.* Click on ''Help'' to obtain instructions for filing the document electronically. Comments may be faxed to 1–202–493–2251, or may be submitted to the Federal eRulemaking Portal: go to *http://www.regulations.gov.* Follow the online instructions for submitting comments.

The petition, supporting materials, and all comments received before the close of business on the closing date indicated below will be filed and will be considered. All comments and supporting materials received after the closing date will also be filed and will be considered to the extent possible. When the petition is granted or denied, notice of the decision will be published in the **Federal Register** pursuant to the authority indicated below.

Comment closing date: January 12, 2007.

(Authority: 49 U.S.C. 30118, 30120: delegations of authority at CFR 1.50 and 501.8.)

Issued on: December 7, 2006.

Daniel C. Smith,

Associate Administrator for Enforcement.

[FR Doc. E6–21223 Filed 12–12–06; 8:45 am]

BILLING CODE 4910–59–P

DEPARTMENT OF TRANSPORTATION

National Highway Traffic Safety Administration

[Docket No. NHTSA–2006–26424; Notice 1]

Maxon Industry Inc. DBA Maxonlift Corp., Receipt of Petition for Decision of Inconsequential Noncompliance

Maxon Industry Inc. DBA Maxonlift Corp. (Maxonlift) has determined that certain wheelchair lifts that it produced in 2005 and 2006 do not comply with S6.4.7.3 of 49 CFR 571.403, Federal Motor Vehicle Safety Standard (FMVSS) No. 403, ''Platform lift systems for motor vehicles.'' Maxonlift has filed an appropriate report pursuant to 49 CFR Part 573, ''Defect and Noncompliance Reports.''

Pursuant to 49 U.S.C. 30118(d) and 30120(h), Maxonlift has petitioned for an exemption from the notification and remedy requirements of 49 U.S.C. Chapter 301 on the basis that this noncompliance is inconsequential to motor vehicle safety.

This notice of receipt of Maxonlift's petition is published under 49 U.S.C. 30118 and 30120 and does not represent any agency decision or other exercise of judgment concerning the merits of the petition.

Affected are a total of approximately 197 Model WL–7 and WL–7A wheel chair lifts produced between April 1, 2005 and May 30, 2006. S6.4.7.3 of FMVSS No. 403 requires:

> The deployed wheelchair retention device(s) must be capable of sustaining 7,117 N (1,600 lb force) when tested in accordance with S7.13. No separation, fracture, or breakage of the wheelchair retention device may occur as a result of conducting the test in S7.13.

On the subject wheelchair lifts, the outboard roll stop wheelchair retention device does not comply. Bending occurs on the locking bracket attachments and in the ramp extrusion, and potentially the outer barrier can unfold or pieces break. Maxonlift has corrected the problem that caused these errors so that they will not be repeated in future production.

Maxonlift believes that the noncompliance is inconsequential to motor vehicle safety and that no corrective action is warranted. Maxonlift states:

> For the units built with seat belts [all except for 63] we have an electronic feature that does not allow the unit to travel up and down without the seat belts fastened. The seat belt is an added restraint that takes force off of the outboard roll stop. If an electric wheelchair is accidentally moved forward it will hit the seat belt first keeping the person in place. We have had zero failure reports or warranty claims relating to an outboard roll stop failure.

Interested persons are invited to submit written data, views, and arguments on this petition. Comments must refer to the docket and notice number cited at the beginning of this notice and be submitted by any of the following methods. Mail: Docket Management Facility, U.S. Department of Transportation, Nassif Building, Room PL–401, 400 Seventh Street, SW., Washington, DC, 20590–0001. Hand Delivery: Room PL–401 on the plaza level of the Nassif Building, 400 Seventh Street, SW., Washington, DC. It is requested, but not required, that two copies of the comments be provided. The Docket Section is open on weekdays from 10 am to 5 pm except Federal Holidays. Comments may be submitted electronically by logging onto the Docket Management System Web site at *http://dms.dot.gov*. Click on ''Help'' to obtain instructions for filing the document electronically. Comments may be faxed to 1–202–493–2251, or may be submitted to the Federal eRulemaking Portal: Go to *http://www.regulations.gov*. Follow the online instructions for submitting comments.

The petition, supporting materials, and all comments received before the close of business on the closing date indicated below will be filed and will be considered. All comments and supporting materials received after the closing date will also be filed and will be considered to the extent possible. When the petition is granted or denied, notice of the decision will be published in the **Federal Register** pursuant to the authority indicated below.

Comment closing date: January 12, 2007.

Authority: 49 U.S.C. 30118, 30120: delegations of authority at CFR 1.50 and 501.8.

Dated: December 7, 2006.

Daniel C. Smith,

Associate Administrator for Enforcement.

[FR Doc. E6–21210 Filed 12–12–06; 8:45 am]

BILLING CODE 4910–59–P

DEPARTMENT OF TRANSPORTATION

National Highway Traffic Safety Administration

[Docket No. NHTSA–2006–26282; Notice 1]

U.S. Bus Corporation, Receipt of Petition for Decision of Inconsequential Noncompliance

U.S. Bus Corporation (U.S. Bus) has determined that certain school buses it produced in 1998 through 2006 do not comply with S9.3(c) of 49 CFR 571.111, Federal Motor Vehicle Safety Standard (FMVSS) No. 111, ''Rearview mirrors.'' U.S. Bus has filed an appropriate report pursuant to 49 CFR Part 573, ''Defect and Noncompliance Reports.''

Pursuant to 49 U.S.C. 30118(d) and 30120(h), U.S. Bus has petitioned for an exemption from the notification and remedy requirements of 49 U.S.C. Chapter 301 on the basis that this noncompliance is inconsequential to motor vehicle safety.

This notice of receipt of U.S. Bus's petition is published under 49 U.S.C. 30118 and 30120 and does not represent any agency decision or other exercise of judgment concerning the merits of the petition.

Affected are a total of approximately 4,019 Universe and Sturdibus school buses produced from 1998 through October 23, 2006. S9.3(c) of FMVSS No. 111 requires that:

> Each school bus which has a mirror installed in compliance with S9.3(a) that has an average radius of curvature of less than 889 mm, as determined under S12, shall have a label visible to the seated driver. * * * The label shall state the following: ''USE CROSS VIEW MIRRORS TO VIEW PEDESTRIANS WHILE BUS IS STOPPED. DO NOT USE THESE MIRRORS TO VIEW TRAFFIC WHILE BUS IS MOVING. IMAGES IN SUCH MIRRORS DO NOT ACCURATELY SHOW ANOTHER VEHICLE'S LOCATION.''

The rearview mirrors on the noncompliant buses are installed in a position which may block the driver's view of this label. U.S. Bus has corrected the problem that caused these errors so that they will not be repeated in future production.

U.S. Bus believes that the noncompliance is inconsequential to motor vehicle safety and that no corrective action is warranted. U.S. Bus states this is based on the following:

> 1. The decal in question is required only on school buses; 2. The crossview mirrors requiring the decal are only required on school buses; 3. School bus drivers are thoroughly trained in driving a school bus, including proper adjustment and viewing images through both the rearview and crossview mirrors; 4. The placement of the decal has no effect on the safety or reliability

of the vehicle; 5. The placement of the decal may or may not be visible from the driver's seated position, and depends upon the adjustment of the rearview mirror as to whether the decal is visible by the driver.

Interested persons are invited to submit written data, views, and arguments on this petition. Comments must refer to the docket and notice number cited at the beginning of this notice and be submitted by any of the following methods. *Mail:* Docket Management Facility, U.S. Department of Transportation, Nassif Building, Room PL–401, 400 Seventh Street, SW., Washington, DC 20590–0001. *Hand Delivery:* Room PL–401 on the plaza level of the Nassif Building, 400 Seventh Street, SW., Washington, DC. It is requested, but not required, that two copies of the comments be provided. The Docket Section is open on weekdays from 10 a.m. to 5 p.m. except Federal Holidays. Comments may be submitted electronically by logging on to the Docket Management System Web site at *http://dms.dot.gov.* Click on ''Help'' to obtain instructions for filing the document electronically. Comments may be faxed to 1–202–493–2251, or may be submitted to the Federal eRulemaking Portal: go to *http://www.regulations.gov.* Follow the online instructions for submitting comments.

The petition, supporting materials, and all comments received before the close of business on the closing date indicated below will be filed and will be considered. All comments and supporting materials received after the closing date will also be filed and will be considered to the extent possible. When the petition is granted or denied, notice of the decision will be published in the **Federal Register** pursuant to the authority indicated below.

Comment closing date: January 12, 2007.

(Authority: 49 U.S.C. 30118, 30120: delegations of authority at CFR 1.50 and 501.8)

Issued on: December 7, 2006.

Daniel C. Smith,

Associate Administrator for Enforcement.

[FR Doc. E6–21224 Filed 12–12–06; 8:45 am]

BILLING CODE 4910–59–P

DEPARTMENT OF TRANSPORTATION

Pipeline and Hazardous Materials Safety Administration

Office of Hazardous Materials Safety; Notice of Delays in Processing of Special Permit Applications

AGENCY: Pipeline and Hazardous Materials Safety Administration, DOT.

ACTION: List of applications delayed more than 180 days.

SUMMARY: In accordance with the requirements of 49 U.S.C. 5117(c), PHMSA is publishing the following list of special permit applications that have been in process for 180 days or more. The reason(s) for delay and the expected completion date for action on each application is provided in association with each identified application.

FOR FURTHER INFORMATION CONTACT: Ann Mazzullo, Office of Hazardous Materials Special Permits and Approvals, Pipeline and Hazardous Materials Safety Administration, U.S. Department of Transportation, 400 Seventh Street, SW., Washington, DC 20590–0001, (202) 366–4535.

Key to ''Reason for Delay''

1. Awaiting additional information from applicant.
2. Extensive public comment under review.
3. Application is technically complex and is of significant impact or precedent-setting and requires extensive analysis.
4. Staff review delayed by other priority issues or volume of special permit applications.

Meaning of Application Number Suffixes

N—New application.
M—Modification request.
X—Renewal.
PM—Party to application with modification request.

Issued in Washington, DC, on December 7, 2006.

Delmer F. Billings,

Director, Office of Hazardous Materials Safety, Special Permits & Approvals.

Application No.	Applicant	Reason for delay	Estimated date of completion
	Modification to Special Permits		
12677–M	Austin Powder Illinois Company, Cleveland, OH	4	01–31–2007.
5749–M	E.I. DuPont de Nemours, Wilmington, DE	4	12–31–2006.
12277–M	Indian Sugar and General Engineering Corporation, Haryana	4	12–31–2006.
10481–M	M–1 Engineering Limited, Bradfrod, West Yorkshire	4	12–31–2006.
10646–M	Schlumberger, Sugar Land, TX	4	12–31–2006.
11447–M	SAES Pure Gas, Inc., San Luis Obispo, CA	4	02–28–2007.
3121–M	Department of Defense, Ft. Eustis, VA	4	12–31–2006.
	New Special Permit Applications		
14229–N	Senex Explosives, Inc., Cuddy, PA	4	01–31–2007.
14237–N	Advanced Technology Materials, Inc. (ATMI), Danbury, CT	1	12–31–2006.
14318–N	Lockheed Martin Technical Operations, Vandenberg AFB, CA	4	12–31–2006.
14343–N	Valero St. Charles, Norco, LA	4	12–31–2006.
14337–N	NKCF Co., Ltd., Jisa-Dong, Kangseo-Gu Busan	4	01–31–2007.
14330–N	Chemical & Metal Industries, Inc., Hudson, CO	4	12–31–2006.
14314–N	North American Automotive Hazmat Action Committee	1	07–31–2007.
14316–N	VOTG North America, Inc., West Chester, PA	4	12–31–2006.
14266–N	NCF Industries, Inc., Santa Maria, CA	1	02–28–2007.
14277–N	Ascus Technologies, Ltd., Cleveland, OH	3,4	12–31–2006.

[FR Doc. 06–9659 Filed 12–12–06; 8:45 am]

BILLING CODE 4910–60–M

DEPARTMENT OF TRANSPORTATION

Surface Transportation Board

[STB Finance Docket No. 34970]

BNSF Railway Company—Trackage Rights Exemption—Stillwater Central Railroad

BNSF Railway Company (BNSF) has agreed to grant overhead trackage rights to Stillwater Central Railroad (SLWC) over BNSF's line of railroad between milepost 423.06, in Tulsa, OK, and milepost 438.90, in Sapulpa, OK, a distance of approximately 15.84 miles.

The transaction is scheduled to be consummated on the December 29, 2006 effective date of the exemption.[1]

The purpose of the trackage rights is to allow the performance of interchange service between BNSF and SLWC.

As a condition to this exemption, any employee affected by the acquisition of the trackage rights will be protected by the conditions imposed in *Norfolk and Western Ry. Co.—Trackage Rights—BN,* 354 I.C.C. 605 (1978), as modified in *Mendocino Coast Ry., Inc.—Lease and Operate,* 360 I.C.C. 653 (1980).

This notice is filed under 49 CFR 1180.2(d)(7). If it contains false or misleading information, the exemption is void *ab initio.* Petitions to revoke the exemption under 49 U.S.C. 10502(d) may be filed at any time. The filing of a petition to revoke will not automatically stay the transaction.

An original and 10 copies of all pleadings, referring to STB Finance Docket No. 34970, must be filed with the Surface Transportation Board, 1925 K Street, NW., Washington, DC 20423–0001. In addition, a copy of each pleading must be served on Sidney L. Strickland, Jr., Sidney Strickland and Associates, PLLC, 3050 K Street, NW., Suite 101, Washington, DC 20007.

Board decisions and notices are available on our Web site at: *http://www.stb.dot.gov.*

Dated: December 5, 2006.

By the Board, David M. Konschnik, Director, Office of Proceedings.

Vernon A. Williams,

Secretary.

[FR Doc. E6–21043 Filed 12–12–06; 8:45 am]

BILLING CODE 4915–01–P

[1] The trackage rights agreement provides for an initial term of 15 years. The parties must seek appropriate Board authority for the trackage rights to expire at the end of that time period.

DEPARTMENT OF TRANSPORTATION

Surface Transportation Board

[STB Finance Docket No. 34971]

BNSF Railway Company—Trackage Rights Exemption—Stillwater Central Railroad

BNSF Railway Company (BNSF) has agreed to grant overhead trackage rights to Stillwater Central Railroad (SLWC) over BNSF's line of railroad between milepost 688.0 (Altus Yard) in Altus, OK, and milepost 668.73 in Long, OK, a distance of approximately 19.3 miles.

The transaction is scheduled to be consummated on the December 29, 2006 effective date of the exemption.[1]

The purpose of the trackage rights is to allow overhead movement of SLWC's trains between Altus, OK and Long, OK.

As a condition to this exemption, any employee affected by the acquisition of the trackage rights will be protected by the conditions imposed in *Norfolk and Western Ry. Co.—Trackage Rights—BN,* 354 I.C.C. 605 (1978), as modified in *Mendocino Coast Ry., Inc.—Lease and Operate,* 360 I.C.C. 653 (1980).

This notice is filed under 49 CFR 1180.2(d)(7). If it contains false or misleading information, the exemption is void *ab initio.* Petitions to revoke the exemption under 49 U.S.C. 10502(d) may be filed at any time. The filing of a petition to revoke will not automatically stay the transaction.

An original and 10 copies of all pleadings, referring to STB Finance Docket No. 34971, must be filed with the Surface Transportation Board, 1925 K Street, NW., Washington, DC 20423–0001. In addition, one copy of each pleading must be served on Sidney L. Strickland, Jr., Sidney Strickland and Associates, PLLC, 3050 K Street, NW., Suite 101, Washington, DC 20007.

Board decisions and notices are available on our Web site at *http://www.stb.gov.*

Decided: December 6, 2006.

By the Board, David M. Konschnik, Director, Office of Proceedings.

Vernon A. Williams,

Secretary.

[FR Doc. E6–21175 Filed 12–12–06; 8:45 am]

BILLING CODE 4915–01–P

[1] The trackage rights' agreement provides for an initial term of 15 years. The parties must seek Board authority for the trackage rights to expire at the end of that time period.

DEPARTMENT OF THE TREASURY

Submission for OMB Review; Comment Request

December 7, 2006.

The Department of the Treasury has submitted the following public information collection requirement(s) to OMB for review and clearance under the Paperwork Reduction Act of 1995, Public Law 104–13. Copies of the submission(s) may be obtained by calling the Treasury Bureau Clearance Officer listed. Comments regarding this information collection should be addressed to the OMB reviewer listed and to the Treasury Department Clearance Officer, Department of the Treasury, Room 11000, 1750 Pennsylvania Avenue, NW., Washington, DC 20220.

Dates: Written comments should be received on or before January 12, 2007 to be assured of consideration.

Financial Management Service (FMS)

OMB Number: 1510–0035.

Type of Review: Extension.

Title: Assignment Form.

Description: This form is used when an award holder wants to assign or transfer all or part of his/her award to another person. When this occurs, the award holder forfeits all future rights to the portion assigned.

Respondents: Individuals or households.

Estimated Total Burden Hours: 75 hours.

Clearance Officer: Wesley Powe (202) 874–8936, Financial Management Service, Room 135, 3700 East West Highway, Hyattsville, MD 20782.

OMB Reviewer: Alexander T. Hunt (202) 395–7316, Office of Management and Budget, Room 10235, New Executive Office Building, Washington, DC 20503.

Robert B. Dahl,

Treasury PRA Clearance Officer.

[FR Doc. E6–21214 Filed 12–12–06; 8:45 am]

BILLING CODE 4810–35–P

DEPARTMENT OF THE TREASURY

Office of Foreign Assets Control

Additional Designation of Individuals Pursuant To Executive Order 13224

AGENCY: Office of Foreign Assets Control, Treasury.

ACTION: Notice.

SUMMARY: The Treasury Department's Office of Foreign Assets Control (''OFAC'') is publishing the names of

five newly-designated individuals whose property and interests in property are blocked pursuant to Executive Order 13224 of September 23, 2001, ''Blocking Property and Prohibiting Transactions With Persons Who Commit, Threaten To Commit, or Support Terrorism.''

DATES: The designation by the Secretary of the Treasury of five individuals identified in this notice, pursuant to Executive Order 13224, is effective on December 7, 2006.

FOR FURTHER INFORMATION CONTACT: Assistant Director, Compliance Outreach & Implementation, Office of Foreign Assets Control, Department of the Treasury, Washington, DC 20220, tel.: 202/622–2490.

SUPPLEMENTARY INFORMATION:

Electronic and Facsimile Availability

This document and additional information concerning OFAC are available from OFAC's Web site (*http://www.treas.gov/ofac*) or via facsimile through a 24-hour fax-on-demand service, tel.: 202/622–0077.

Background

On September 23, 2001, the President issued Executive Order 13224 (the ''Order'') pursuant to the International Emergency Economic Powers Act, 50 U.S.C. 1701–1706, and the United Nations Participation Act of 1945, 22 U.S.C. 287c. In the Order, the President declared a national emergency to address grave acts of terrorism and threats of terrorism committed by foreign terrorists, including the September 11, 2001, terrorist attacks in New York, Pennsylvania, and at the Pentagon. The Order imposes economic sanctions on persons who have committed, pose a significant risk of committing, or support acts of terrorism. The President identified in the Annex to the Order, as amended by Executive Order 13268 of July 2, 2002, 13 individuals and 16 entities as subject to the economic sanctions. The Order was further amended by Executive Order 13284 of January 23, 2003, to reflect the creation of the Department of Homeland Security.

Section 1 of the Order blocks, with certain exceptions, all property and interests in property that are in or hereafter come within the United States or the possession or control of United States persons, of: (1) Foreign persons listed in the Annex to the Order; (2) foreign persons determined by the Secretary of State, in consultation with the Secretary of the Treasury, the Secretary of the Department of Homeland Security and the Attorney General, to have committed, or to pose a significant risk of committing, acts of terrorism that threaten the security of U.S. nationals or the national security, foreign policy, or economy of the United States; (3) persons determined by the Secretary of the Treasury, in consultation with the Secretary of State, the Secretary of the Department of Homeland Security and the Attorney General, to be owned or controlled by, or to act for or on behalf of those persons listed in the Annex to the Order or those persons determined to be subject to subsection 1(b), 1(c), or 1(d)(i) of the Order; and (4) except as provided in section 5 of the Order and after such consultation, if any, with foreign authorities as the Secretary of State, in consultation with the Secretary of the Treasury, the Secretary of the Department of Homeland Security and the Attorney General, deems appropriate in the exercise of his discretion, persons determined by the Secretary of the Treasury, in consultation with the Secretary of State, the Secretary of the Department of Homeland Security and the Attorney General, to assist in, sponsor, or provide financial, material, or technological support for, or financial or other services to or in support of, such acts of terrorism or those persons listed in the Annex to the Order or determined to be subject to the Order or to be otherwise associated with those persons listed in the Annex to the Order or those persons determined to be subject to subsection 1(b), 1(c), or 1(d)(i) of the Order.

On December 7, 2006, the Secretary of the Treasury, in consultation with the Secretary of State, the Secretary of the Department of Homeland Security, the Attorney General, and other relevant agencies, designated, pursuant to one or more of the criteria set forth in subsections 1(b), 1(c) or 1(d) of the Order, five individuals whose property and interests in property are blocked pursuant to Executive Order 13224.

The list of additional designees follows:

1. AHMAD, Najmuddin Faraj (a.k.a. FARRAJ, Fateh Najm Eddine; a.k.a. KREKAR, Mullah; a.k.a. NAJMUDDIN, Faraj Ahmad), Heimdalsgate 36–V, 0578 Oslo, Norway; DOB 7 Jul 1956; alt. DOB 17 Jun 1963; POB Olaqloo Sharbajer Village, al-Sulaymaniyah Governorate, Iraq; citizen Iraq.

2. AL-ALI, Hamid (a.k.a. AL-ALI, Dr. Hamed Abdullah; a.k.a. AL-ÁLI, Hamed; a.k.a. AL-ÁLI, Hamed bin Ábdallah; a.k.a. AL-ÁLI, Hamid Ábdallah; a.k.a. AL-ÁLI, Hamid ÁAbdallah Ahmad; a.k.a. AL–ALI, Hamid bin Abdallah Ahmed; a.k.a. ''ABU SALIM''); DOB 20 Jan 1960; citizen Kuwait.

3. AL-BATHALI, Mubarak Mushakhas Sanad (a.k.a. AL BATHALI, Mubarak Mishkhis Sanad; a.k.a. AL-BADHALI, Mubarak Mishkhis Sanad; a.k.a. AL-BATHALI, Mubarak; a.k.a. AL-BATHALI, Mubarak Mishkhas Sanad; a.k.a. AL-BAZALI, Mubarak Mishkhas Sanad; a.k.a. AL-BTHALY, Mobarak Meshkhas Sanad); DOB 1 Oct 1961; citizen Kuwait; Passport 101856740 (Kuwait).

4. AL-JALAMAH, Jaber (a.k.a. AL-JALAHMA, Jaber; a.k.a. AL-JALAHMAH, Abu Muhammad; a.k.a. AL-JALAHMAH, Jabir Abdallah Jabir Ahmad; a.k.a. AL-JALAMAH, Jabir Ábdallah Jabir Ahmad; a.k.a. AL-JALHAMI, Jabir; a.k.a. ''ÁBDUL-GHANI''; a.k.a. ''ABU MUHAMMAD''); DOB 24 Sep 1959; nationality Kuwait; Passport 101423404.

5. MOUMOU, Mohamed (a.k.a. MUMU, Mohamed; a.k.a. ''ÁBDALLAH, Abu''; a.k.a. ''ABDERRAHMAN, Abou''; a.k.a. ''AMINA, Abu''; a.k.a. ''SHRAYDA, Abu''), Storvretsvagen 92, 7 TR. C/O Drioua, 142 31 Skogas, Sweden; Dobelnsgatan 97, 7 TR C/O Lamrabet, 113 52 Stockholm, Sweden; Jungfruns Gata 413; Postal Address Box: 3027, 13603 Haninge, Sweden; London, United Kingdom; Trodheimsgatan 6, 164 32 Kista, Sweden; DOB 30 Jul 1965; alt. DOB 30 Sep 1965; POB Fez, Morocco; citizen Morocco; alt. citizen Sweden; Passport 9817619 (Sweden) expires 14 Dec 2009.

Dated: December 7, 2006.

Adam J. Szubin,

Director, Office of Foreign Assets Control.

[FR Doc. E6–21218 Filed 12–12–06; 8:45 am]

BILLING CODE 4811–42–P

Federal Register

Wednesday,
December 13, 2006

Part II

Securities and Exchange Commission

17 CFR Part 242

Short Selling in Connection With a Public Offering; Proposed Rule

SECURITIES AND EXCHANGE COMMISSION

17 CFR Part 242

[Release No. 34–54888; File No. S7–20–06]

RIN 3235–AJ75

Short Selling in Connection With a Public Offering

AGENCY: Securities and Exchange Commission.

ACTION: Proposed rule.

SUMMARY: The Securities and Exchange Commission (''Commission'') is proposing amendments to Regulation M concerning the anti-manipulation rules for securities offerings that would further safeguard the integrity of the capital raising process and protect issuers from manipulative activity that can reduce issuers' offering proceeds and dilute security holder value. The proposal would prevent a person from effecting a short sale during a limited time period, shortly before pricing, and then purchasing, including entering into a contract of sale for, such security in the offering.

DATES: Comments should be received on or before February 12, 2007

ADDRESSES: Comments may be submitted by any of the following methods:

Electronic Comments

- Use the Commission's Internet comment form (*http://www.sec.gov/rules/proposed.shtml*); or
- Send an e-mail to *rule-comments@sec.gov.* Please include File No. S7–20–06 on the subject line; or
- Use the Federal eRulemaking Portal (*http://www.regulations.gov*). Follow the instructions for submitting comments.

Paper Comments

- Send paper comments in triplicate to Nancy M. Morris, Secretary, Securities and Exchange Commission, 100 F Street, NE., Washington, DC 20549–1090.

All submissions should refer to File Number S7–20–06. This file number should be included on the subject line if e-mail is used. To help us process and review your comments more efficiently, please use only one method. The Commission will post all comments on the Commission's Internet Web site (*http://www.sec.gov/rules/proposed.shtml*). Comments are also available for public inspection and copying in the Commission's Public Reference Room, 100 F Street, NE., Washington, DC 20549. All comments received will be posted without change; we do not edit personal identifying information from submissions. You should submit only information that you wish to make publicly available.

FOR FURTHER INFORMATION CONTACT: James A. Brigagliano, Acting Associate Director, Josephine Tao, Branch Chief, Elizabeth Sandoe, Victoria Crane, and Marlon Quintanilla Paz, Special Counsels, (202) 551–5720, Office of Trading Practices and Processing, Division of Market Regulation, Securities and Exchange Commission, 100 F Street, NE., Washington, DC 20549–6628.

SUPPLEMENTARY INFORMATION: The Commission is requesting public comment on proposed amendments to Rule 105 of Regulation M [17 CFR 242.105].

Table Of Contents

I. Introduction
II. Background
III. Discussion of Proposed Amendments
IV. Derivatives
V. Request for Comment
VI. Paperwork Reduction Act
VII. Consideration of Proposed Amendments to Rule 105 of Regulation M's Costs and Benefits
A. Benefits
B. Costs
VIII. Consideration of Burden on Competition and Promotion of Efficiency, Competition, and Capital Formation
IX. Consideration of Impact on the Economy
X. Initial Regulatory Flexibility Analysis
A. Reasons for the Proposed Action
B. Objectives
C. Legal Basis
D. Small Entities Subject to the Rule
E. Reporting, Recordkeeping and Other Compliance Requirements
F. Duplicative, Overlapping or Conflicting Federal Rules
G. Significant Alternatives
H. Solicitation of Comments
XI. Statutory Basis

I. Introduction

A fundamental goal of Regulation M, *Anti-manipulation Rules Concerning Securities Offerings*, is protecting the independent pricing mechanism of the securities markets so that offering prices result from the natural forces of supply and demand unencumbered by artificial forces.[1] Price integrity is essential in the offering process. Regulation M is intended to foster price integrity by prohibiting activity that interferes with independent market dynamics, prior to pricing offerings, by persons with a heightened incentive to manipulate.

Regulation M consists of a definitional rule, Rule 100, and five additional rules, Rules 101 through 105.[2] Rule 105, *Short Selling In Connection With A Public Offering*, prohibits a person from covering a short sale[3] with securities sold in the offering, if such person sold short within five days prior to pricing or the period beginning with the filing of the registration statement and ending with pricing, whichever is shorter. This short selling can artificially depress market prices which can lead to lower than anticipated offering prices, thus causing an issuer's offering proceeds to be reduced.[4]

We are aware of non-compliance with current Rule 105, and in some cases, strategies used to disguise Rule 105 violations.[5] Despite interpretive guidance regarding the application of Rule 105,[6] we have witnessed continued violations of the rule, including a proliferation of trading strategies and structures attempting to accomplish the economic equivalent of the activity that the rule seeks to prevent.

We propose amending Rule 105 to make it unlawful for a person to effect a short sale during the Rule 105 restricted period and then purchase, including enter into a contract of sale for, such security in the offering. The proposal, like the current rule, provides a bright line test for Rule 105 compliance consistent with the prophylactic nature of Regulation M. In light of evidence of non-compliance with the current rule, we believe the proposal would promote investor and issuer confidence in pricing integrity and in the offering process, which should facilitate capital formation. In addition, the elimination of the current rule's covering component is intended to address attempts to restructure transactions in an effort to evade Rule 105.

The proposal is narrowly tailored to address short sales prior to pricing that can reduce issuers' offering proceeds without restricting other short sales before the offering.[7] Like the current rule, the proposal would permit persons that effect short sales prior to the restricted period to purchase, including to enter into a contract of sale for, such security in the offering and would

[1] Securities Exchange Act of 1934 (''Exchange Act'') Release No. 38067 (Dec. 20, 1996), 62 FR 520 (Jan. 3, 1997) (''Regulation M Adopting Release'').

[2] 17 CFR 242.100 through 242.105.

[3] A short sale is the sale of a security that the seller does not own or any sale that is consummated by the delivery of a security borrowed by, or for the account of, the seller. *See* 17 CFR 242.200 (2006).

[4] *See* Regulation M Adopting Release, 62 FR at 538.

[5] *See infra* n.18.

[6] *See* Exchange Act Release No. 50103 (July 28, 2004), 69 FR 48008, 48020–21 (Aug. 6, 2004) (''Regulation SHO Adopting Release'').

[7] If the registered offering is on behalf of selling security holders, the proceeds of such selling security holders can be similarly reduced.

permit persons to sell short during the restricted period if they do not purchase, including enter into a contract of sale for, such security in the offering.

We solicit specific comment on our approach and the specific proposals. We encourage commenters to present data on our proposals and any suggested alternative approaches.

II. Background

The Commission has long been concerned that short sales effected prior to certain offerings that are covered with offering securities can be manipulative conduct harmful to the market and can have a substantial impact on issuers or selling security holders. Rule 10b–21,[8] the predecessor to Rule 105, prohibited covering short sales with offering securities if the short sale took place during the period beginning at the time that the registration statement or Form 1–A was filed and ending at the time that sales may be made pursuant to the registration statement or Form 1–A.[9] The Commission stated that Rule 10b–21 would ''help deter a practice that the Commission views as manipulative and destructive of issuers' capital raising activities.'' [10]

Prior to Rule 10b–21's adoption, the Commission noted the staff's view about short selling prior to an offering, stating that ''it appears that such short selling prior to the offering date has had a substantial adverse impact on the market price of the securities and in some instances has caused the offerings to be postponed temporarily, to be abandoned completely, or to be made at prices lower than originally intended—prices which do not reflect the market value of the securities, undistorted by artificial factors.'' [11]

Generally, the offering prices of follow-on and secondary offerings [12] are priced at a discount to a stock's closing price (depending on the exchange, the closing transaction price, closing bid price, or last sale price) prior to pricing. This discount provides a motivation for a person who has a high expectation of receiving offering shares to capture this discount by aggressively short selling just prior to pricing and then covering the person's short sales at the lower offering price with securities received through an allocation. Covering the short sale with a specified amount of registered offering securities at a fixed price allows a short seller largely to avoid market risk and usually guarantee a profit.[13] Short sales during the period immediately preceding pricing an offering can exert downward pressure upon a stock's price that can result in lower offering prices.

Some persons may decide to sell short prior to the pricing of an offering because they believe the security is overpriced. This activity provides a true price discovery mechanism for the market and should be encouraged. Persons who are attempting to capture the offer price discount are not selling short the security because the security is overpriced; thus, they do not contribute to true pricing efficiency.[14] Instead, by selling the security short with the knowledge that they are very likely to be able to cover their short positions with offering shares that they are allocated, these persons may drive down the price despite their true belief regarding the appropriate price for that security. The likelihood of being allocated offering shares provides these persons with an advantage over other persons, which they may exploit to the detriment of pricing efficiency. Not only is this conduct harmful to the market and current security holders, but it can reduce the proceeds the issuer or the selling security holder receives from the securities offering.

To facilitate true price discovery, Rule 105 governs short sales immediately prior to pricing follow-on and secondary offerings where the short sales are covered with offering securities.[15] Currently, Rule 105 prohibits persons from covering a short sale with offering securities if the short sale occurred during a Rule 105 restricted period. Typically, the Rule 105 restricted period begins five business days before the pricing of the offering and ends with pricing.[16] Rule 105 is prophylactic. Thus, its prohibitions apply irrespective of a short seller's intent.[17] Rule 105 does not ban short sales because certain short sales may be motivated by a short seller's evaluation of a security's future performance and contribute to pricing efficiency and price discovery. The rule does not unduly restrict short selling, and thus does not hamper true price discovery, because persons are not prohibited from short selling and persons expecting to receive allocation

[8] Rule 10b–21 was rescinded with the adoption of Regulation M. Regulation M Adopting Release, 62 FR at 520.

[9] Exchange Act Release No. 33702 (Mar. 2, 1994), 59 FR 10984 (Mar. 9, 1994) (''Rule 10b–21 Adopting Release''). Rule 10b–21(T) was initially adopted on a temporary basis. Exchange Act Release No. 26028 (Aug. 31, 1988), 53 FR 33455 (Aug. 31, 1988). The Commission proposed the rule for public comment in 1987. Exchange Act Release No. 24485 (May 20, 1987), 52 FR 19885 (May 28, 1987) (''1987 Proposing Release''). The Commission proposed three versions of Rule 10b–21 prior to the 1987 Proposing Release. *See* Exchange Act Release No. 10636 (Feb. 11, 1974), 39 FR 7806 (Feb. 28, 1974); Exchange Act Release No. 11328 (Apr. 2, 1975), 40 FR 16090 (Apr. 9, 1975); Exchange Act Release No. 13092 (Dec. 21, 1976), 41 FR 56542 (Dec. 28, 1976).

Rule 10b–21 provided that, ''It shall be unlawful for any person who effects one or more short sales of equity securities of the same class as securities offered for cash pursuant to a registration statement filed under the Securities Act of 1933 ('Securities Act') or pursuant to a notification on Form 1–A under the Securities Act ('offered securities'), to cover such short sale or sales with offered securities purchased from an underwriter or broker or dealer participating in the offering, if such short sales or sale took place during the period beginning at the time that the registration statement or Form 1–A is filed and ending at the time that sales may be made pursuant to the registration statement or Form 1–A.'' Former Rule 10b–21(a).

[10] 53 FR at 33456.

[11] Exchange Act Release No. 9824 (Oct. 25, 1972), 37 FR 22796 (Oct. 25, 1972). In addition, the Commission noted the staff's view that ''Such investors and broker-dealers, desiring to participate in so-called 'hot' issue offerings, agree to accommodate the underwriters and therefore participate in the so-called 'cold' issue. Such persons reportedly then attempt to protect themselves against losses by selling the securities short prior to the distribution, intending to cover their position with the securities being offered.'' 37 FR at 22796.

[12] The first time an issuer conducts a public offering of its securities, the offering is referred to as an initial public offering (''IPO''). Subsequent offerings by the issuer are referred to as follow-on offerings or repeat offerings. A secondary offering is an offering of securities held by security holders, for which there already exist trading markets for the same class of securities as those being offered. *See* Exchange Act Release No 10636 (Feb. 11, 1974), 39 FR 7806 n.1 (Feb. 28, 1974). Of course, IPOs also may include secondary offerings by selling security holders.

[13] Of course, there are additional risks including execution risk, quantity risk and litigation risk that the short seller might consider. Based on our experience, it would appear that many investors perceive these risks as minimal because they do not appear to deter this shorting strategy. The shorting strategy is detailed in a number of enforcement cases concerning Rule 105. *See infra* n.18.

[14] ''The Commission has also cautioned that 'any person intending to purchase securities in any registered secondary offering should be on notice that his selling short the same securities prior to the offering may be subject to the registration requirements of Section 5 of the Securities Act [15 U.S.C. 77e] as well as other applicable statutes and rules.' Exchange Act Release No. 10636 (Feb. 11, 1974). *Accord,* Exchange Act Release Nos. 11328 n. 1 (Apr. 2, 1975) and 9824 (Oct. 16, 1972).'' Exchange Act Release No. 26028 (Aug. 25, 1988), 53 FR 3345, 33457 (Aug. 31, 1988).

[15] 17 CFR 242.105. *Short selling in connection with a public offering.* (a) Unlawful Activity. In connection with an offering of securities for cash pursuant to a registration statement or a notification on Form 1–A (§ 239.90 of this chapter) filed under the Securities Act, it shall be unlawful for any person to cover a short sale with offered securities purchased from an underwriter or broker or dealer participating in the offering, if such short sale occurred during the shorter of: (1) The period beginning five business days before the pricing of the offered securities and ending with such pricing; or (2) The period beginning with the initial filing of such registration statement or notification on Form 1–A and ending with such pricing.

[16] *See id.*

[17] *See* Exchange Act Release No. 48795 (Nov. 17, 2003), 68 FR 65820, 65822 n.22 (Nov. 21, 2003) (stating that Rule 105 does not require a showing of scienter). Short sales effected during the Rule 105 restricted period can depress market prices and reduce an issuer's offering proceeds even if the short seller has no manipulative intent.

of offering shares can effect short sales prior to the Rule 105 restricted period. In addition, short sales can be made during the restricted period if the seller does not cover with shares it receives in the offering.

There has been non-compliance with Rule 105 and examples are detailed in numerous recent Commission enforcement cases.[18] We have seen patterns where persons engage in strategies to avoid the appearance that offering shares they were allocated are used to cover Rule 105 restricted period short sales. Whether trading strategies are the product of attempts to avoid application of the rule or attempts to conceal Rule 105 violations, they indicate the presence of activity that the rule is designed to prevent.

Certain of the cases illustrate activity meant to obfuscate the prohibited covering. One method of obscuring a Rule 105 violation involves post-offering sales and purchases undertaken to give the appearance that the restricted period short sales were covered with shares other than the offering allocation. For example, a person (1) effects a short sale of 5,000 shares during a Rule 105 restricted period, (2) purchases, including enters into a contract of sale for, 5,000 shares of the security in the offering, (3) following the purchase, or entry into the contract of sale, sells 5,000 shares and (4) contemporaneously or nearly contemporaneously purchases 5,000 shares. The Rule 105 violation may be complete when the restricted period short sale is covered with offering shares at step number 2 above. Once the restricted period short sale is executed and the person purchases, including enters into a contract of sale for, the offered securities, the position is economically flat. A contemporaneous or nearly contemporaneous post-offering purchase and sale does not undo the Rule 105 violation.[19] In that situation, a person may violate Rule 105 despite his or her claim that the market purchase following the offering, rather than the shares acquired in the offering, covered the short position because there is no legitimate economic purpose or substance to the contemporaneous purchase and sale, no genuine change in beneficial ownership, and/or little or no market risk.

Certain Commission enforcement cases illustrate variations of this tactic. The following examples illustrate attempted concealments of covering through the use of crossed limit orders and the use of market orders. Persons may claim that a post-allocation shares purchase, rather than the shares from the offering allocation, are used to cover the restricted period short sale. However, this post offering activity may be an attempt to conceal the prohibited covering after the Rule 105 violation has occurred.

The Commission has settled proceedings in which respondents covered restricted period short positions in violation of Rule 105 and placed post-offering limit orders to sell and purchase the offered security at the same price and in the same quantity.[20] For example, 1,000 shares of an issuer's common stock were sold short during the restricted period. Next, the person purchased, including entered into a contract of sale for, 1,000 shares of the security in the offering. Thereafter, buy and sell limit orders were placed to ''cross'' 1,000 shares of the issuer within the same account. Subsequently, the Commission has settled cases in which the respondents effected a post-offering sale and purchase of securities with market orders filled at nearly the same price.[21]

Another strategy to obfuscate the prohibited covering is a practice known as ''collapsing the box.'' In one Commission settled case, for example, a person created ''boxed'' positions by maintaining a short position established during the restricted period while simultaneously maintaining a long position in the security with the shares acquired in a follow-on offering.[22] To cover the short sales, the person instructed its prime broker to make journal entries that cancelled out the long and short positions through the use of riskless, offsetting journal entries.[23] Consequently, the offering shares were used to cover the restricted period short sale.

Each of these structures or strategies we have observed seeks to replicate the economic equivalent of the activity that Rule 105 seeks to prevent. Additional examples of strategies that have developed over the years to conceal conduct prohibited by Rule 105 include arrangements to purchase from third parties and married puts. The Commission reiterated guidance initially issued under Rule 10b–21(T),[24] the predecessor to Rule 105, concerning attempts to obscure violations through indirect covering purchases using an intermediary.[25] In this situation, a short sale is effected during the restricted period and covered with offering securities obtained through an arrangement with a third party who acquires the securities in the offering. Through these types of transactions, the trader is attempting to do indirectly what he cannot do directly, *i.e.*, the covering prohibited by Rule 105.[26] Section 20(b) of the Exchange Act makes it ''unlawful for any person, directly or indirectly, to do any act or thing which it would be unlawful for such person to do * * * through or by means of any other person.'' [27]

Further, the Commission noted its concern about the abusive use of married puts as part of trading strategies designed to hide activity that violates Rule 105. In this strategy, a married put[28] is used to conceal the fact that the sale effected during the restricted period is a short sale. Essentially, this technique is used to give the appearance

[18] *See, e.g., SEC* v. *Solar Group S.A. and James J. Todd*, No. 06–CV–12936 (SDNY Nov. 6, 2006), Litigation Release No. 19899 (Nov. 6, 2006); *SEC* v. *Graycort Financial, LLC*, No. C 06–6033 (NDCA Sept. 28, 2006), Litigation Release No. 19851 (Sept. 28, 2006); *SEC* v. *Compania Internacional Financiera SA and Yomi Rodrig*, No. 05–CV–10634 (SDNY Dec. 20, 2005), Litigation Release No. 19501 (Dec. 20, 2005); *SEC* v. *Galleon Management, L.P.*, Litigation Release No. 19228 (May 19, 2005); *DB Investment Managers, Inc.*, Exchange Act Release No. 51707 (May 19, 2005); *Oaktree Capital Management LLC*, Exchange Act Release No. 51709 (May 19, 2005); *SEC* v. *Joseph X. Crivelli*, Exchange Act Release No. 50092 (July 27, 2004); *Ascend Capital, LLC*, Exchange Act Release No. 48188 (July 17, 2003); and *SEC* v. *Ethan H. Weitz and Robert R. Altman*, Litigation Release No. 18121 (Apr. 30, 2003).

[19] The Commission issued interpretive guidance regarding transactions that are engineered to obfuscate a Rule 105 violation. 69 FR at 48021.

[20] *See, e.g., SEC* v. *Graycort Financial, LLC*, No. C 06–6033 (NDCA Sept. 28, 2006); Litigation Release No. 19851 (Sept. 28, 2006); *Ascend Capital, LLC*, Exchange Act Release No. 48188 (July 17, 2003).

[21] *See, e.g., SEC* v. *Graycort Financial, LLC*, No. C 06–6033 (NDCA Sept. 28, 2006); *SEC* v. *Galleon Management, L.P.*, Litigation Release No. 19228 (May 19, 2005); *Oaktree Capital Management LLC*, Exchange Act Release No. 51709 (May 19, 2005).

[22] *See id.*

[23] *Id.* (alleging Galleon established a 63,310 share short position during the restricted period, received a 95,000 share offering allocation, sold 31,690 shares, leaving a 63,310 share boxed position, and thereafter instructed its prime broker to collapse the 63,310 share box).

[24] *See supra* n.9.

[25] Regulation SHO Adopting Release, 69 FR at 48021 (stating ''[in] this transaction, the trader is attempting to accomplish indirectly what he or she cannot do directly, *i.e.*, a type of short sale transaction prohibited by Rule 105.''); *See also,* Exchange Act Release No. 26028 (Aug. 25, 1988), 53 FR 33455, 33458 (Aug. 31, 1988) (stating that ''covering purchases effected by prearrangement or other understanding through other purchasers in the primary offering are proscribed through the operation of section 20(b) of the Exchange Act, which prohibits a person from doing indirectly any act that he is prohibited from doing directly by the Exchange Act or any rule thereunder.'').

[26] *Id.*

[27] 15 U.S.C. 78t(b).

[28] The term ''married put'' is used to describe the underlying transaction, *i.e.*, the linked purchase of securities and a put option to sell an equivalent number of securities.

that the restricted period sale was a long sale, when in fact it was a short sale.[29]

This proposal is designed to further provide confidence to issuers and investors that offering prices would be determined through the natural forces of supply and demand and would not be reduced by potentially manipulative activity. Moreover, the proposal should further provide confidence to persons that they are making investment decisions based on market prices and offering prices unencumbered by artificial forces.

III. Discussion of Proposed Amendments

In light of non-compliance with Rule 105, and the various strategies designed to conceal conduct prohibited by Rule 105, we propose to amend Rule 105 to prohibit any person from effecting a restricted period short sale and then purchasing, including entering into a contract of sale for, the security in the offering. A short sale is the sale of a security that the seller does not own or any sale that is consummated by the delivery of a security borrowed by, or for the account of, the seller.[30] As we have noted before, a person purchases, including entering into a contract of sale for, a security when the person becomes irrevocably committed to purchase the security.[31]

Currently, Rule 105 makes it unlawful for a person to cover a restricted period short sale with offered securities. Eliminating the covering component is designed to end the progression of schemes and structures engineered to camouflage prohibited covering. Otherwise, we would have to continue to address each variation on a case-by-case basis, which could increase uncertainty in the marketplace. The proposal fosters the goals of Rule 105 and would be consistent with the objectives of Regulation M—the prevention of manipulation and the facilitation of offering prices based on the natural forces of supply and demand unencumbered by artificial influence. The proposal would promote market integrity by precluding conduct that can be manipulative around the time an offering is priced so that market prices can be fairly determined by supply and demand. It would promote price movements that result from natural market forces, undistorted by artificial forces. This would bolster investor confidence in the capital raising process. Further, the proposal would protect issuers and selling security holders from a specific and demonstrated type of activity that can reduce their offering proceeds.

As with the current rule, the proposal would not ban short selling. The proposal, like the current rule, would allow short sales based on a person's view of a security's future performance: persons could effect short sales before the restricted period and still purchase, including enter into a contract of sale for, the security in the offering, and persons could effect short sales during the restricted period and not purchase, including enter into a contract of sale for, the security in the offering. However, the proposal does not provide an exception to allow those that close-out restricted period short sales prior to pricing to participate in the offering.

Finally, the proposal restructures the rule in an effort to promote compliance consistent with the prophylactic nature of Regulation M.

As with current Rule 105, responsibility for compliance with the proposal would rest with the person that effects a short sale during the restricted period and purchases, including enters into a contract of sale for, the security in the offering allocation. However, as with any securities law, rule or regulation, broker-dealers may be charged, depending on the facts and circumstances, for aiding and abetting or causing securities law violations by their customers.[32] We encourage commenters to discuss compliance issues, including but not limited to, the costs of compliance as well as any other costs.

IV. Derivatives

In adopting Rule 105, the Commission stated that Rule 105 does not apply to short sales of derivative securities, ''because an extension of the rule's prohibitions to derivative securities would be inconsistent with the approach of Regulation M, which is to focus on those securities having the greatest manipulative potential.'' [33] Nonetheless, we understand that persons may use options or other derivatives in ways that may cause the harm that Rule 105 is intended to prevent. We request comment on trading strategies involving derivatives that may produce similar effects (*e.g.*, depress the market prices of the underlying equity security and result in lower offering prices) in ways not covered by the current or proposed rule. Please provide specific detail regarding the derivatives used, the transactions employed, as well as the roles of the various parties to the transactions. Please describe whether a regulatory approach that covers derivatives is over inclusive or under inclusive and provide alternative suggestions.

As with other rules, we note that the use of derivatives as a part of trading strategies designed to evade the application of Rule 105 does not comply with Commission rules.[34] For example, persons may attempt to circumvent Rule 105 by claiming to have a position in a security by virtue of having entered into a ''married put'' transaction when in fact their transactions were the equivalent of short sales, for which they used shares acquired in the offering to close-out their restricted period sales.[35] Such conduct is proscribed through the operation of section 20(b) of the Exchange Act.[36] The Commission has

[29] Commission Guidance on Rule 3b–3 and Married Put Transactions, Exchange Act Release No. 48795 (Nov. 17, 2003), 68 FR 65820 (Nov. 21, 2003) (''Married Puts Release'') (stating ''Most recently, we have become aware of certain strategies in which traders may acquire married puts as part of what may be an effort to circumvent the application of Rule 105. In these schemes traders enter into married put transactions during the restricted period 5 days before (or, sometimes, on the day of) pricing in a 'secondary' or 'repeat' offering. Thereafter, the traders aggressively sell the stock portion of the married put as 'long' sales, exercise the puts at the end of the day they are obtained, and then use securities obtained in the offering (sometimes obtained at a discount to the closing price) to cover their restricted period sales. This activity often enables the traders receiving offering shares to profit from the difference between the sales prices and the offering price, where the sales lowered the market price and, as a consequence, the market-based offering price. Not only is this manipulative conduct harmful to the market, but it also may have a substantial impact on the issuer and its security holders that receive reduced offering proceeds as a result of the lower offering price. We find the use of married put transactions as a part of these strategies particularly troubling because they represent an attempt to facilitate the very kind of abuse that'' Rule 105 is designed to prevent.).

[30] *See* 17 CFR 242.200. Although this definition would remain unchanged for purposes of the proposed amendment, for ease of reference, the proposed rule text includes a reference to Regulation SHO. We also removed the phrase ''from an underwriter or broker or dealer participating in the offering'' because Rule 105 now covers shelf offerings and the phrase is no longer necessary.

[31] *See* Securities Offering Reform, Exchange Act Release No. 52056 (July 19, 2005), 70 FR 44722, 44765 n.391 (Aug. 3, 2005).

[32] *See, generally*, Exchange Act sections 15(b)(4), 20(a), 20(e), and 21C. *See also Sharon M. Graham and Stephen C. Voss* v. *SEC*, 222 F.3d 994, 1007 (D.C. Cir. 2000).

[33] Reg. M Adopting Release, 62 FR at 538.

[34] *See, e.g.*, Reg. M Adopting Release, 63 FR 538 (citing to Rule 10b–21 Adopting Release, 53 FR at 33457); Married Puts Release, 68 FR at 65820.

[35] Married Puts Release, 68 FR at 65822 (discussing the operation of Rule 3b–3 with respect to sellers who may claim to have a position in a security by virtue of having entered into a ''married put'' transaction).

[36] 15 U.S.C. 78t(b); *see also, supra* n.25.

also noted that, ''purchases effected by prearrangement or other understanding through other purchasers in the primary offering are proscribed through the operation of section 20(b) of the Exchange Act, which prohibits a person from doing indirectly any act that he is prohibited from doing directly by the Exchange Act or any rule thereunder.'' [37]

V. Request for Comment

Q. The proposal provides that a person who effects a restricted period short sale cannot purchase, including enter into a contract of sale for, the security in the offering. As proposed, the rule does not provide an exception to allow those that cover restricted period short sales prior to pricing to participate in the offering. Should the proposed rule provide an exception to allow a person who effects a restricted period short sale to purchase, including enter into a contract of sale for, the security in the offering if, after effecting the restricted period short sale but before pricing of the offering, the person closes-out the entire short position in an offered security with an open market purchase during regular trading hours that is reflected on the consolidated tape or other reporting media? Please discuss any alternatives, including whether the rule should provide an exception to allow a person who effects a restricted period short sale to purchase, including enter into a contract of sale for, the security in the offering if, after effecting the restricted period short sale but before pricing of the offering, the person can demonstrate, using required books and records, that the person closed-out the restricted period short sales (but not necessarily the person's entire short position) with an open market purchase during regular trading hours that is reflected on the consolidated tape or other reporting media. What would be the appropriate time period in which to close-out a person's entire or restricted period short position, *i.e.*, 2 business days before pricing? Would a shorter or longer period be appropriate? If so, please explain. Would such an alternative address the abuses that the rule is designed to prevent? Would such an alternative prevent potential transactions designed to disguise rule violations? What is the frequency of such trading? What difficulties would be presented by not providing an exception to allow persons to close-out the short position? If the proposed rule provides for such an exception, should it also require that the person claiming the exception be able to demonstrate compliance? Are there other ways, instead of an open market purchase executed during regular trading hours that is reflected on the consolidated tape or other reporting media that a person could use to close-out their entire or restricted period short position that would be transparent to the market prior to pricing and should be considered? What are the benefits of allowing a person to close-out his entire or restricted period short position after effecting a restricted period short sale but prior to pricing of the offering?

Q. Is the restricted period sufficient to dissipate the effects of any manipulative short selling on the price of the offered security? Is there a longer or shorter time frame or alternative measure that would be more effective?

Q. Should the Rule 105(b) exception for offerings that are not conducted on a firm commitment basis be eliminated or retained? If you believe that the exception should be retained, please describe why the manipulative abuse that Rule 105 is designed to prevent is not present in offerings conducted on other than a firm commitment basis.

Q. In recent cases involving ''Private Investment in Public Equity'' (''PIPEs'') transactions, persons are alleged to have agreed to invest in PIPE offerings, sold short the issuer's securities, and closed-out the short position using shares acquired from the issuer in the PIPE transaction that are registered for resale by such persons. Should the Rule address short sales effected during the period following the entering into of a PIPE transaction and before a registration statement for resale of the restricted securities acquired in the PIPE transaction is declared effective, or short sales that are effected at any time in connection with the PIPE transaction? Is there an alternative period for which the Rule should restrict short sales that persons intend to close-out by using shares acquired from the issuer in PIPE transactions? What would be the impact on issuers concerning short sales effected in connection with PIPE transactions if the Rule applied to securities registered for resale in connection with PIPEs transactions? For example, what would be the effect on issuers' ability to attract PIPE investors and the effect on the market for the issuers' securities?

Q. We are aware that short sales effected prior to the exercise of conversion rights, such as those under a convertible debenture, can depress stock prices and result in the issuance of more shares upon the exercise of the conversion rights. For example, a convertible security such as a convertible debenture may grant an investor the right to convert all or a portion of the debenture into common stock based on a formula using the price of the common stock at the time of conversion with the investor receiving more shares on conversion if the market price of the common stock declines. A person may be liable under the anti-fraud provisions of the federal securities laws if that person seeks to manipulate the stock price downward to enhance the economic interests in a convertible security.[38] Should Rule 105 address short sales effected prior to the exercise of conversion rights?

Q. Should Rule 105 apply to issuances of rights to an issuer's existing security holders to buy a proportional number of additional securities at a given price (usually at a discount) within a fixed period (a rights offering). Is there a similar potential for persons to influence the offer price through a rights offering?

Q. Should the Rule address short sales effected in connection with equity line financing arrangements in which an investor and a company enter into a written agreement under which the company has the right to put its securities to the investor in an offering in which the securities are registered for sale or resale?

Q. Under the current and proposed rule, an investor with a long position can legally sell all or part of the position during the five days prior to the offer and still purchase shares in the offering. We request comment on whether an investor with a long position may have the same economic incentives to attempt this arbitrage or to manipulate the price of the offer as a short seller. Aside from legal risk, are the risks and returns of the long strategy any different from the risks and returns of the short strategy? Can this strategy harm issuers? Should the Commission consider broadening Rule 105 to include long sales?

Q. Rule 200(a) defines the term ''short sale'' as any sale of a security that the seller does not own or any sale that is consummated by the delivery of a security borrowed by, or for the account of, the seller. Should the Commission consider modifying this definition in order to further the goals of this proposal?

Q. Should Rule 105 apply to offerings not made pursuant to a registration statement on Form 1–A?

Q. Regulation E under the Securities Act of 1933 provides certain small business investment companies and

[37] Rule 10b–21 Adopting Release, 53 FR at 33458.

[38] *See, e.g., SEC* v. *Rhino Advisors, Inc. and Thomas Badian*, No. 03–CIV–1310 (SDNY 2003), Litigation Release No. 18003 (Feb. 27, 2003).

business development companies with a registration exemption that is similar to Regulation A. Should Rule 105 apply to offerings made pursuant to Form 1–E, Notification under Regulation E?

Q. Would this proposal be more effective than the existing rule in deterring attempts to obscure violations of Rule 105 and limiting manipulation of offering prices?

Q. Rule 200(c) of Regulation SHO states that, ''[a] person shall be deemed to own securities only to the extent that he has a net long position in such securities.'' In order to determine the net long position, a seller of an equity security must aggregate all of that person's positions in that security. Under Rule 200(f) of Regulation SHO, however, a registered broker-dealer may qualify for independent trading unit aggregation. We seek comment about the application of the aggregation principles in the context of Rule 105 to non-broker-dealers, including, for example, investment companies. Should non-broker-dealers be provided an exception similar to that provided to broker-dealers under Rule 200(f) of Regulation SHO based on these aggregation principles, *e.g.*, should there be a requirement that the non-broker dealer be a registered investment adviser, or be a client of a registered investment adviser for purposes of the excepted transaction? If so, what criteria would be appropriate?

Q. Are there alternative approaches to revising Rule 105 that should be considered?

Q. Beyond selling short, are there other types of trading strategies that Rule 105 should address that similarly exert untoward downward pressure on a stock's market price and thus lower market prices prior to the pricing of follow-on and secondary offerings? How should such trading strategies be addressed?

Q. Should potential investors in an offering be required to give an underwriter a certification that they have not effected and will not effect a short sale during the Rule 105 restricted period? What are the costs and benefits of such a requirement for investors and underwriters? Would this impact the costs of underwriting? Should any such certification instead be provided to the broker-dealer through which the person is purchasing the shares?

Q. We request comment on any liquidity or market efficiency impact that the proposal may raise.

Q. Empirical evidence shows that, on average, issuers decline in value by about 3% when they announce an impending public equity offering. Later, issuers' value declines another 1% to 3% in the five days prior to the offer. Following the offer, issuers' value recovers but the value five days after the offer is still about ½% lower than the value five days before the offer.[39] We request comment on any effect the proposal will have on such price patterns, *i.e.*, the price of a security declining prior to an offering and not fully recovering. Is this price pattern due to a type of evasion of Rule 105 that the proposed amendment would eliminate? Would these price patterns change as a result of the proposal? Can the ½% loss in issuers' value be considered an economic benefit of the proposed amendment to Rule 105? Can any of the 3% value decline at the announcement of a public equity offer be considered an economic benefit of the proposed amendment to Rule 105?

Q. We request comment on any impact the proposal may have on trading and trading strategies.

Q. We request comment on any impact the proposal may have on dynamic hedging activities.

Q. To what extent, if any, will the proposal increase or decrease the potential for other types of manipulation?

Q. Are there any technical or operational challenges that would arise in complying with the proposal?

Q. Does the proposal present any special compliance difficulties or other issues?

Q. How much would the amendments affect specific compliance costs or other costs for small, medium and large entities?

Q. We request comment concerning any effects that the proposal may have on market participants, including underwriters as well as specific effects that the proposal may have on the underwriting process.

Q. We request comment concerning any effects that the proposal may have on issuers, including the ability of issuers to attract investors to their securities offerings and the costs to issuers of completing offerings.

Q. Would the proposed amendment create additional costs for or otherwise impact short sellers, issuers, investors, underwriters, or others?

Q. What are the economic costs or other costs associated with the proposal?

General Request for Comments

The Commission seeks comment generally on all aspects of the proposed amendment to Rule 105 of Regulation M. Any interested persons wishing to submit written comments on the proposal, as well as other matters that might have an impact on the proposal, are requested to do so. Commenters are requested to provide empirical data to support their views and arguments related to the proposal herein. In addition to the questions posed above, commenters are welcome to offer their views on any other matter raised by the proposed amendment to Rule 105. With respect to any comments, we note that they are of the greatest assistance to our rulemaking initiative if accompanied by supporting data and analysis of the issues addressed in those comments and by alternatives to our proposal where appropriate.

VI. Paperwork Reduction Act

We have not prepared a submission to the Office of Management and Budget regarding the amendments to Rule 105 of Regulation M because the proposals do not contain a collection of information requirement within the meaning of the Paperwork Reduction Act of 1995.

VII. Consideration of Proposed Amendments to Rule 105 of Regulation M's Costs and Benefits

The Commission is considering the costs and benefits of the proposed amendments to Rule 105. The Commission is sensitive to costs and benefits, requests data to quantify the costs and the value of the benefits provided, and encourages commenters to discuss any additional costs or benefits or reductions in costs beyond those discussed here. Commenters should provide analysis and data to support their views on the costs and benefits associated with the proposed amendment. If applicable, the Commission requests comments on the potential costs for any modification to computer systems and surveillance mechanisms as well as any potential benefits resulting from the proposal for issuers, investors, broker or dealers, other securities industry professionals, regulators or other market participants.

A. Benefits

The proposal is intended to further safeguard the integrity of the capital raising process and protect issuers from potentially manipulative activity that can reduce issuers' offering proceeds. The proposal also is designed to provide confidence to persons that they are making investment decisions based on market prices and offering prices unencumbered by artificial forces. Specifically, the proposal would

[39] Several empirical studies report these price patterns both before and after the application of Rule 10b–21. See, *e.g.*, Shane A. Corwin, The Determinants of Underpricing for Seasoned Equity Offers, 58 J. Fin. 2249 (Oct. 2003).

prohibit a person who effects a short sale during the Rule 105 restricted period from purchasing, including entering into a contract of sale for, the security in an offering. The benefits of the proposed modifications to Rule 105 would be realized by many market participants, including investors, issuers, selling security holders, underwriters, short sellers and regulators.

The proposed amendments to Rule 105 are intended to further facilitate market prices and offering prices that can be fairly determined by the natural forces of supply and demand undistorted by artificial forces. Currently, Rule 105 makes it unlawful for a person to cover a short sale effected during the Rule's restricted period with certain offering securities. The proposed amendment would eliminate the covering component and instead prohibit a person who effects a short sale during the Rule's restricted period from purchasing, including entering into a contract of sale for, the security in an offering. The proposal is intended to halt schemes designed to conceal the prohibited covering. It also provides a bright line demarcation of prohibited activity consistent with the prophylactic nature of Regulation M.

Issuers and selling security holders should benefit from the proposal because it is designed to promote the goals of the current rule, enhancing market integrity by precluding conduct that can be manipulative around the time an offering is priced so that market prices can be fairly determined by supply and demand. The proposal should help issuers and selling security holders realize proceeds that are not artificially low due to short selling. The proposal also would promote investor confidence in the offering process, which should foster capital formation. In turn, these benefits should encourage issuers to conduct capital formation in the U.S. market.

Moreover, the proposed Rule 105 modifications retain much of the flexibility of the current rule for traders because persons continue to be able to sell short during the restricted period if they do not purchase, including enter into a contract of sale for, the securities. Persons also retain the ability to sell short prior to the Rule 105 restricted period and then purchase, including enter into a contract of sale for, the securities.

We believe the proposed modification may reduce activity designed to disguise rule violations. We believe this would lead to a reduction in the number of instances of aggressive short sellers attempting to place artificial downward pressure on market prices. Therefore, the proposal would strengthen the ability of underwriters to set offering prices without being encumbered by artificial activities in the market.

We believe short sellers would benefit from the proposal because it provides a bright line test for Rule 105 compliance consistent with the prophylactic nature of Regulation M. The proposal does not ban short selling. Indeed, it would allow short sales that may contribute to pricing efficiency and price discovery. The bright line demarcation is important because it would provide clear guidance for short sellers seeking to comply with Rule 105.

We believe the proposal may decrease the level of non-compliance with the Rule. The proposed elimination of the Rule's covering component should reduce attempts to disguise the covering activity through convoluted trading structures. This would save significant regulatory resources that would otherwise be spent pursuing evolving strategies to disguise conduct that violates the Rule.

B. Costs

In complying with the proposed modifications to Rule 105, a person that effects a short sale during a defined period could not purchase, including enter into a contract of sale for, the security in the offering. Under current Rule 105, persons that effect short sales during a restricted period cannot cover their short position with the offering securities. Thus, we believe any costs currently associated with persons reviewing their restricted period short sales would remain the same, as a person would use the current systems and surveillance mechanisms for information gathering, management, and recordkeeping systems or procedures. Indeed this proposal is intended to provide a more straightforward means of compliance.

As an aid in evaluating costs and reductions in costs associated with the proposed Rule 105 modifications, the Commission requests the public's views and any supporting information. The Commission believes that the proposed amendments would impose negligible costs, if any, on traders and issuers and that the proposed amendments are appropriate for the protection of investors and issuers and to promote the integrity of the capital raising process.

The Commission staff has noted that investors desiring to participate in hot issue offerings may improperly accommodate an underwriter by participating in a cold issue. Investors may attempt to protect themselves against losses in a cold issue by selling securities short in the Rule 105 restricted period intending to cover with offering securities in violation of Rule 105.[40] We seek comment about any impact the proposal may have on the underwriting process. If the proposal impacts the underwriting process, would it make it easier or more difficult for underwriters to sell offerings and what, if any, impact would there be on efficiency of the pricing of an offering or competition among underwriters?

The Commission encourages commenters to discuss all costs. In particular, the Commission requests comment on the potential costs for any modification to systems and surveillance mechanisms, and for information gathering, management, and recordkeeping systems or procedures. Commenters should provide analysis and data to support their views on any costs associated with the proposed amendment.

VIII. Consideration of Burden on Competition and Promotion of Efficiency, Competition, and Capital Formation

Section 3(f) of the Exchange Act requires the Commission, whenever it engages in rulemaking that requires it to consider or determine if an action is necessary or appropriate in the public interest, to consider whether the action would promote efficiency, competition, and capital formation.[41] In addition, Section 23(a)(2) of the Exchange Act requires the Commission, in adopting rules under the Exchange Act, to consider the anti-competitive effects of any rules it adopts.[42] Exchange Act Section 23(a)(2) prohibits the Commission from adopting any rule that would impose a burden on competition not necessary or appropriate in furtherance of the purposes of the Exchange Act.

The Commission preliminarily believes that the proposed amendment would promote capital formation through improved integrity of the U.S. securities markets by precluding conduct that can depress security prices during a critical period of time in the capital raising process. Preventing the type of potentially manipulative activity targeted by the proposed amendment would help protect the pricing process so that the forces of supply and demand are not undermined. The proposal would promote price determinations and movements that result from natural market forces, undistorted by artificial influences. We request comment on the

[40] *See supra* n.11.

[41] 15 U.S.C. 78c(f).

[42] 15 U.S.C. 78w(a)(2).

impact of the amendment on capital formation.

Short sales based upon a person's evaluation of the issuer's fundamentals (products, earnings, management, etc.) and a security's future performance may contribute to pricing efficiency and price discovery. Such short sales reflect the value that a trader assigns to an issuer's security. However, short sales prior to pricing an offering by a person who expects an offering allocation and anticipates making a quick profit from effecting the short sale and then purchasing, including entering into a contract of sale for, the security in the offering, may not similarly reflect the trader's evaluation of the issuer's fundamental value.

The Commission staff has noted that investors desiring to participate in hot issue offerings may improperly accommodate an underwriter by participating in a cold issue. Investors may attempt to protect themselves against losses in a cold issue by selling securities short in the Rule 105 restricted period intending to cover with offering securities in violation of Rule 105.[43] We seek comment about any impact the proposal may have on the underwriting process. If the proposal impacts the underwriting process, would it make it easier or more difficult for underwriters to sell offerings and what, if any, impact would there be on efficiency of the pricing of an offering or competition among underwriters?

The Commission has considered the proposal in light of the standards cited in Section 23(a)(2) and believes preliminarily that, if adopted, the proposed amendments would not impose a burden on competition not necessary or appropriate in furtherance of the purposes of the Exchange Act. Specifically, the proposed version of the Rule would continue to allow short sales based on a person's view of a security's future performance. Traders could sell short before the restricted period. Alternatively, traders could sell short during the restricted period if they do not purchase, including enter into a contract of sale for, the securities. The proposal would provide a bright line approach designed to prevent improper conduct and to provide a bright line demarcation regarding conduct that is prohibited for persons wishing to comply with the rule.

The Commission generally requests comment on the competitive or anticompetitive effects of the proposed amendments to Rule 105. The Commission also requests comment on what impact the proposed amendments to Rule 105 would have on efficiency and capital formation. Commenters should provide analysis and empirical data to support their views on the costs and benefits associated with the proposal.

IX. Consideration of Impact on the Economy

For purposes of the Small Business Regulatory Enforcement Fairness Act of 1996, or (SBREFA),[44] we must advise the Office of Management and Budget as to whether the proposed amendments constitute a ''major'' rule. Under SBREFA, a rule is considered ''major'' where, if adopted, it results or is likely to result in:

- An annual effect on the economy of $100 million or more (either in the form of an increase or a decrease);
- A major increase in costs or prices for consumers or individual industries; or
- Significant adverse effect on competition, investment, or innovation.

If a rule is ''major,'' its effectiveness will generally be delayed for 60 days pending Congressional review. We request comment on the potential impact of the proposed amendments on the economy on an annual basis. Commenters are requested to provide empirical data and other factual support for their view to the extent possible.

X. Initial Regulatory Flexibility Analysis

The Commission has prepared an Initial Regulatory Flexibility Analysis (IRFA), in accordance with the provisions of the Regulatory Flexibility Act (RFA)[45] regarding the proposed amendment to Rule 105 of Regulation M.

A. Reasons for the Proposed Action

The proposal is intended to safeguard the integrity of the capital raising process and further protect issuers from potentially manipulative activity that can reduce issuers' offering proceeds. There have been a number of Rule 105 cases brought by the Commission over the last few years.[46] The proposal would provide a bright line test for Rule 105 compliance, which would be consistent with the prophylactic nature of Regulation M. The bright line demarcation is important because it provides clear guidance for persons seeking to comply with Rule 105. We believe the proposed bright line demarcation would reduce Rule 105 violations.

Certain of the Commission's recent cases involved violations of Rule 105 that involved a complex series of trading activity designed to obfuscate the prohibited covering of restricted period short positions with offered shares. We have observed continuously evolving strategies to obscure conduct prohibited under Rule 105. Each scheme seeks to replicate the economic equivalent of the activity that Rule 105 seeks to prevent. We believe it is important to eliminate the covering component of the rule to cut off the likely future development of more complex attempts to disguise violations of the Rule.

B. Objectives

The proposed amendments to Rule 105 would prohibit a person who effects a short sale in the restricted period from purchasing, including entering into a contract of sale for, the security in an offering. The proposal is designed to promote the goals of the current rule, enhancing market integrity by precluding conduct that can be manipulative around the time an offering is priced so that market prices can be fairly determined by supply and demand. The proposal would promote price movements that result from natural market forces, undistorted by artificial forces. Accordingly, we believe the proposal would further safeguard the integrity of the capital raising process and protect issuers from potentially manipulative activity that can reduce issuers' offering proceeds. The proposal also would promote investor confidence in the offering process, which should foster capital formation.

C. Legal Basis

The Commission is proposing to amend Rule 105 pursuant to the authority set forth in sections 7, 17(a), and 19(a) of the Securities Act of 1933 [15 U.S.C. 77g, 77q(a), 77s(a)]; sections 2, 3, 7(c)(2), 9(a), 10, 11A(c), 12, 13, 14, 15(b), 15(c), 15(g), 17(a), 17(b), 17(h), 23(a), 30A, and 36 of the Securities Exchange Act of 1934 [15 U.S.C. 78b, 78c, 78g(c)(2), 78i(a), 78j, 78k–1(c), 78l, 78m, 78n, 78o(b), 78o(c), 78o(g), 78q(a), 78q(b), 78q(h), 78w(a), 78dd–1, 78mm]; and sections 23, 30, 38 of the Investment Company Act [15 U.S.C. 80a–23, 80a–29, and 80a–37].

D. Small Entities Subject to the Rule

The proposed rule applies to any person that effects a short sale during the restricted period. This is unchanged from the current rule. The entities

[43] *See supra* n.11.

[44] Pub. L. 104–121, Title II, 110 Stat. 857 (1996) (codified in various sections of 5 U.S.C. and as a note to 5 U.S.C. 601).

[45] 5 U.S.C. 603.

[46] *See supra* n.17.

covered by the proposed rule would thus include small broker-dealers, small businesses, and any investor eligible to effect a short sale that qualifies as a small entity.

Generally, these entities are already subject to the current rule, which contains requirements similar to those in the proposed rule. As a result, the marginal cost of compliance with the proposed rule for these businesses is likely to be minimal.

Although it is impossible to quantify every type of small entity that may be able to effect a short sale in a security, Paragraph (c)(1) of Rule 0–10[47] states that the term ''small business'' or ''small organization,'' when referring to a broker-dealer, means a broker or dealer that had total capital (net worth plus subordinated liabilities) of less than $500,000 on the date in the prior fiscal year as of which its audited financial statements were prepared pursuant to § 240.17a–5(d); and is not affiliated with any person (other than a natural person) that is not a small business or small organization. As of 2005, the Commission estimates that there were approximately 910 broker dealers that qualified as small entities as defined above.[48]

Any business, however, regardless of industry, could be subject to the proposed rule if it effects a short sale. The Commission believes that, except for the broker-dealers discussed above, an estimate of the number of small entities that fall under the proposed rule is not feasible.

E. Reporting, Recordkeeping and Other Compliance Requirements

The proposed amendments to Rule 105 may impose limited new compliance requirements on any affected party, including broker-dealers that are small entities. Under the proposed amendments, market participants could not purchase, including enter into a contract of sale for, the securities if they acquired a short position in the security during a restricted period. This proposal would not modify the measurement of restricted periods that apply, therefore, since the current rule also addresses conduct around short selling that occurs during a restricted period, the monitoring that would be required of market participants to ensure compliance with the amended Rule would not change. The proposal does not contain recordkeeping or reporting requirements for broker-dealers.

F. Duplicative, Overlapping or Conflicting Federal Rules

The Commission believes that there are no federal rules that duplicate, overlap or conflict with the proposed amendments.

G. Significant Alternatives

The RFA directs the Commission to consider significant alternatives that would accomplish the stated objective, while minimizing any significant adverse impact on small issuers and broker-dealers. Pursuant to Section 3(a) of the RFA,[49] the Commission considered the following alternatives: (1) The establishment of differing compliance or reporting requirements or timetables that take into account the resources available to small entities; (2) the clarification, consolidation, or simplification of compliance and reporting requirements under the Rule for small entities; (3) the use of performance rather than design standards; and (4) an exemption from coverage of the Rule, or any part thereof, for small entities.

With respect to the proposed amendments to Rule 105, the Commission believes that, in order to preclude conduct that can be manipulative around the time an offering is priced so that market prices can be fairly determined by supply and demand, uniform rules applicable to all market participants (regardless of size) are necessary. The Commission believes that the establishment of different requirements for small entities is neither practicable nor in the public interest because small entities can conduct the same type of manipulative trading as others. The proposed amendments would likely impose minimal additional costs, if any; therefore, establishing different compliance requirements or clarifying, consolidating, or simplifying compliance or reporting requirements for small entities would yield little or no additional benefit. With regard to the proposed amendments to Rule 105, and clarification of the application of the regulation, small entities would not be specifically exempted, since all securities may be subject to the type of manipulation the amendments seek to prevent. Finally, the proposed amendments to Rule 105 would impose performance standards rather than design standards.

H. Solicitation of Comments

The Commission encourages written comments on matters discussed in the IRFA. In particular, the Commission requests comments on (1) the number of persons that are subject to Rule 105 and the number of such persons that are small entities; (2) the nature of any impact the proposed amendments would have on small entities and empirical data supporting the extent of the impact (commenters are asked to describe the nature of any impact and provide empirical data supporting the extent of the impact); and (3) how to quantify the number of small entities that would be affected by and/or how to quantify the impact of the proposed amendments. Such comments will be considered in the preparation of the Final Regulatory Flexibility Analysis, if the proposed amendments are adopted, and will be placed in the same public file as comments on the proposed amendments themselves. As discussed above, for purposes of SBREFA, the Commission is also requesting information regarding the potential impact of the proposed amendments on the economy on an annual basis. Commenters should provide empirical data to support their views.

XI. Statutory Basis

The Commission is proposing to amend Rule 105 pursuant to the authority set forth in sections 7, 17(a), and 19(a) of the Securities Act of 1933 [15 U.S.C. 77g, 77q(a), 77s(a)]; sections 2, 3, 7(c)(2), 9(a), 10, 11A(c), 12, 13, 14, 15(b), 15(c), 15(g), 17(a), 17(b), 17(h), 23(a), 30A, and 36 of the Securities Exchange Act of 1934 [15 U.S.C. 78b, 78c, 78g(c)(2), 78i(a), 78j, 78k–1(c), 78l, 78m, 78n, 78o(b), 78o(c), 78o(g), 78q(a), 78q(b), 78q(h), 78w(a), 78dd–1, 78mm]; and sections 23, 30, 38 of the Investment Company Act [15 U.S.C. 80a–23, 80a–29, and 80a–37].

Text of Proposed Amendments

List of Subjects in 17 CFR Part 242

Brokers, Fraud, Reporting and recordkeeping requirements, Securities.

In accordance with the foregoing, Title 17, Chapter II, Part 242 of the Code of Federal Regulations is proposed to be amended as follows:

PART 242—REGULATIONS M, SHO, ATS, AC, AND NMS AND CUSTOMER MARGIN REQUIREMENTS FOR SECURITY FUTURES

1. The authority citation for part 242 continues to read as follows:

Authority: 15 U.S.C. 77g, 77q(a), 77s(a), 78b, 78c, 78g(c)(2), 78i(a), 78j, 78k–1(c), 78l,

[47] 17 CFR 240.0–10(c)(1).

[48] These numbers are based on the Office of Economic Analysis' review of 2005 FOCUS Report filings reflecting registered broker dealers. This number does not include brokeer-dealers that are delinquent on FOCUS Report filings.

[49] 5 U.S.C. 603(c).

78m, 78n, 78o(b), 78o(c), 78o(g), 78q(a), 78q(b), 78q(h), 78w(a), 78dd–1, 78mm, 80a–23, 80a–29, and 80a–37.

2. Section 242.105 is amended by revising paragraph (a) to read as follows:

§ 242.105 Short selling in connection with a public offering.

(a) *Unlawful Activity.* In connection with an offering of securities for cash pursuant to a registration statement or a notification on Form 1–A (§ 239.90 of this chapter) filed under the Securities Act of 1933, it shall be unlawful for any person to effect a short sale (as defined in § 242.200) and then purchase, including enter into a contract of sale for, the security in the offering if that person effected such short sale in the offered security during the shorter of:

(1) The period beginning five business days before the pricing of the offered securities and ending with such pricing; or

(2) The period beginning with the initial filing of such registration statement or notification on Form 1–A and ending with the pricing.

* * * * *

Dated: December 6, 2006.

By the Commission.

Nancy M. Morris,

Secretary.

[FR Doc. E6–21141 Filed 12–12–06; 8:45 am]

BILLING CODE 8011–01–P

Federal Register

Wednesday,
December 13, 2006

Part III

Department of the Treasury

Internal Revenue Service

26 CFR Part 54

Department of Labor

Employee Benefits Security Administration

29 CFR Part 2590

Department of Health and Human Services

Centers for Medicare & Medicaid Services

45 CFR Part 146

Nondiscrimination and Wellness Programs in Health Coverage in the Group Market; Final Rules

DEPARTMENT OF THE TREASURY

Internal Revenue Service

26 CFR Part 54

[TD 9298]

RIN 1545–AY32

DEPARTMENT OF LABOR

Employee Benefits Security Administration

29 CFR Part 2590

RIN 1210–AA77

DEPARTMENT OF HEALTH AND HUMAN SERVICES

Centers for Medicare & Medicaid Services

45 CFR Part 146

RIN 0938–AI08

Nondiscrimination and Wellness Programs in Health Coverage in the Group Market

AGENCIES: Internal Revenue Service, Department of the Treasury; Employee Benefits Security Administration, Department of Labor; Centers for Medicare & Medicaid Services, Department of Health and Human Services.

ACTION: Final rules.

SUMMARY: This document contains final rules governing the provisions prohibiting discrimination based on a health factor for group health plans and issuers of health insurance coverage offered in connection with a group health plan. The rules contained in this document implement changes made to the Internal Revenue Code of 1986 (Code), the Employee Retirement Income Security Act of 1974 (ERISA), and the Public Health Service Act (PHS Act) enacted as part of the Health Insurance Portability and Accountability Act of 1996 (HIPAA).

DATES: *Effective date.* These final regulations are effective February 12, 2007.

Applicability dates. These final regulations apply for plan years beginning on or after July 1, 2007.

FOR FURTHER INFORMATION CONTACT: Russ Weinheimer, Internal Revenue Service, Department of the Treasury, at (202) 622–6080; Amy Turner or Elena Lynett, Employee Benefits Security Administration, Department of Labor, at (202) 693–8335; or Karen Levin or Adam Shaw, Centers for Medicare & Medicaid Services, Department of Health and Human Services, at (877) 267–2323 extension 65445 and 61091, respectively.

Customer Service Information: Individuals interested in obtaining copies of Department of Labor publications concerning health care laws may request copies by calling the Department of Labor (DOL), Employee Benefits Security Administration (EBSA) Toll-Free Hotline at 1–866–444–EBSA (3272) or may request a copy of the Department of Health and Human Services (HHS), Centers for Medicare & Medicaid Services (CMS) publication entitled ''Protecting Your Health Insurance Coverage'' by calling 1–800–633–4227. These regulations as well as other information on HIPAA's nondiscrimination rules and other health care laws are also available on the Department of Labor's Web site (*http://www.dol.gov/ebsa*), including the interactive web pages Health Elaws.

SUPPLEMENTARY INFORMATION:

I. Background

The Health Insurance Portability and Accountability Act of 1996 (HIPAA), Public Law 104–191 (110 Stat. 1936), was enacted on August 21, 1996. HIPAA amended the Internal Revenue Code of 1986 (Code), the Employee Retirement Income Security Act of 1974 (ERISA), and the Public Health Service Act (PHS Act) to provide for, among other things, improved portability and continuity of health coverage. HIPAA added section 9802 of the Code, section 702 of ERISA, and section 2702 of the PHS Act, which prohibit discrimination in health coverage based on a health factor. Interim final rules implementing the HIPAA provisions were published in the **Federal Register** on April 8, 1997 (62 FR 16894) (1997 interim rules). On December 29, 1997, the Department of Labor, the Department of Health and Human Services, and the Department of the Treasury (the Departments) published a clarification of the April 1997 interim rules as they relate to individuals who were denied coverage before the effective date of HIPAA on the basis of any health factor (62 FR 67689).

On January 8, 2001, the Departments published interim final regulations (2001 interim rules) on many issues under the HIPAA nondiscrimination provisions (66 FR 1378) and proposed regulations on wellness programs under those nondiscrimination provisions (66 FR 1421). These regulations being published today in the **Federal Register** finalize both the 2001 interim rules and the proposed rules.

II. Overview of the Regulations

Section 9802 of the Code, section 702 of ERISA, and section 2702 of the PHS Act (the HIPAA nondiscrimination provisions) establish rules generally prohibiting group health plans and group health insurance issuers from discriminating against individual participants or beneficiaries based on any health factor of such participants or beneficiaries. The 2001 interim rules —

- Explained the application of these provisions to benefits;
- Clarified the relationship between the HIPAA nondiscrimination provisions and the HIPAA preexisting condition exclusion limitations;
- Explained the application of these provisions to premiums;
- Described similarly situated individuals;
- Explained the application of these provisions to actively-at-work and nonconfinement clauses; and
- Clarified that more favorable treatment of individuals with medical needs generally is permitted.

In general, these final regulations do not change the 2001 interim rules or the proposed rules on wellness programs. However, these regulations do not republish the expired transitional rules regarding individuals who were denied coverage based on a health factor prior to the applicability date of the 2001 interim rules. (These regulations do republish, and slightly modify, the special transitional rule for self-funded nonfederal governmental plans that had denied any individual coverage due to the plan's election to opt out of the nondiscrimination requirements under 45 CFR 146.180, in cases where the plan sponsor subsequently chooses to bring the plan into compliance with those requirements). These regulations clarify how the source-of-injury rules apply to the timing of a diagnosis of a medical condition and add an example to illustrate how the benefits rules apply to the carryover feature of health 0reimbursement arrangements (HRAs). For wellness programs, the final regulations clarify some ambiguities in the proposed rules, make some changes in terminology and organization, and add a description of wellness programs not required to satisfy additional standards.

Application to Benefits

Under the 2001 interim rules and these regulations, a plan or issuer is not required to provide coverage for any particular benefit to any group of similarly situated individuals. However, benefits provided must be uniformly available to all similarly situated

individuals. Likewise, any restriction on a benefit or benefits must apply uniformly to all similarly situated individuals and must not be directed at individual participants or beneficiaries based on any health factor of the participants or beneficiaries (determined based on all the relevant facts and circumstances).

With respect to these benefit rules, the Departments received many inquiries about HRAs and one comment about nondiscrimination requirements under other laws. Under HRAs, employees are reimbursed for medical expenses up to a maximum amount for a period, based on the employer's contribution to the plan. These plans may or may not be funded. Another common feature is that the plans typically allow amounts remaining available at the end of the period to be used to reimburse medical expenses in later periods. Because the maximum reimbursement available under a plan to an employee in any single period may vary based on the claims experience of the employee, concerns have arisen about the application of the HIPAA nondiscrimination rules to these plans.

To address these concerns, these final regulations include an example under which the carryforward of unused employer-provided medical care reimbursement amounts to later years does not violate the HIPAA nondiscrimination requirements, even though the maximum reimbursement amount for a year varies among employees within the same group of similarly situated individuals based on prior claims experience. In the example, an employer sponsors a group health plan under which medical care expenses are reimbursed up to an annual maximum amount. The maximum reimbursement amount with respect to an employee for a year is a uniform amount multiplied by the number of years the employee has participated in the plan, reduced by the total reimbursements for prior years. Because employees who have participated in the plan for the same length of time are eligible for the same total benefit over that length of time, the example concludes that the arrangement does not violate the HIPAA nondiscrimination requirements.

The Equal Employment Opportunity Commission (EEOC) asked the Departments to clarify that certain plan practices or provisions permitted under the benefits paragraphs of the 2001 interim rules may violate the Americans with Disabilities Act of 1990 (ADA) or Title VII of the Civil Rights Act of 1964 (Title VII). Specifically, the 2001 interim rules allow plans to exclude or limit benefits for certain types of conditions or treatments. The EEOC commented that, if such a benefit limit were applied to AIDS, it would be a disability-based distinction that violates the ADA (unless it is permitted under section 501(c) of the ADA). In addition, the EEOC commented that an exclusion from coverage of prescription contraceptives, but not of other preventive treatments, would violate Title VII because prescription contraceptives are used exclusively by women.

Paragraph (h) of the 2001 interim rules and these final regulations is entitled ''No effect on other laws.'' This section clarifies that compliance with the nondiscrimination rules is not determinative of compliance with any other provision of ERISA, or any other State or Federal law, including the ADA. Moreover, in paragraph (b) of the 2001 interim rules and these final regulations, the general rule governing the application of the nondiscrimination rules to benefits clarifies that whether any plan provision or practice with respect to benefits complies with these rules does not affect whether the provision or practice is permitted under any other provision of the Code, ERISA, or the PHS Act, the Americans with Disabilities Act, or any other law, whether State or Federal.

Many other laws may regulate plans and issuers in their provision of benefits to participants and beneficiaries. These laws include the ADA, Title VII, the Family and Medical Leave Act, ERISA's fiduciary provisions, and State law. The Departments have not attempted to summarize the requirements of those laws in the HIPAA nondiscrimination rules. Instead, these rules clarify the application of the HIPAA nondiscrimination rules to group health plans, which may permit certain practices that other laws prohibit. Nonetheless, to avoid misleading plans and issuers as to the permissibility of any plan provision under other laws, the Departments included, in both paragraph (h) and paragraph (b) of the regulations, references to the potential applicability of other laws. Employers, plans, issuers, and other service providers should consider the applicability of these laws to their coverage and contact legal counsel or other government agencies such as the EEOC and State insurance departments if they have questions under those laws.

Source-of-Injury Exclusions

Some plans and issuers, while generally providing coverage for the treatment of an injury, deny benefits if the injury arose from a specified cause or activity. These kinds of exclusions are known as source-of-injury exclusions. Under the 2001 interim rules, if a plan or issuer provides benefits for a particular injury, it may not deny benefits otherwise provided for treatment of the injury due to the fact that the injury results from a medical condition or an act of domestic violence. Two examples in the 2001 interim rules illustrate the application of this rule, to injuries resulting from an attempted suicide due to depression and to injuries resulting from bungee jumping.

These final regulations retain the provisions in the 2001 interim rules and add a clarification. Some people have inquired if a suicide exclusion can apply if an individual had not been diagnosed with a medical condition such as depression before the suicide attempt. These final regulations clarify that benefits may not be denied for injuries resulting from a medical condition even if the medical condition was not diagnosed before the injury.

Some comments expressed concern that the discussion of the source-of-injury rule in the 2001 interim rules might be used to support the use of vague language to identify plan benefit exclusions, especially to identify source-of-injury exclusions. Requirements for plan benefit descriptions are generally outside of the scope of these regulations. Nonetheless, Department of Labor regulations at 29 CFR 2520.102–2(b) provide, ''The format of the summary plan description must not have the effect of misleading, misinforming or failing to inform participants and beneficiaries. Any description of exception, limitations, reductions, and other restrictions of plan benefits shall not be minimized, rendered obscure or otherwise made to appear unimportant * * * The advantages and disadvantages of the plan shall be presented without either exaggerating the benefits or minimizing the limitations.'' State laws governing group insurance or nonfederal governmental plans may provide additional protections.

The Departments received thousands of comments protesting that the source-of-injury provisions in the 2001 interim rules would generally permit plans or issuers to exclude benefits for the treatment of injuries sustained in the activities listed in the conference report to HIPAA (motorcycling, snowmobiling, all-terrain vehicle riding, horseback riding, skiing, and other similar activities). Many comments requested that the source-of-injury rule be amended to provide that a source-of-injury exclusion could not apply if the

injury resulted from (in addition to an act of domestic violence or a medical condition) participation in legal recreational activities such as those listed in the conference report. Some comments expressed the concern that the rule in the 2001 interim rules would cause plans and issuers to begin excluding benefits for treatment of injuries sustained in these kinds of activities.

One comment generally supported the position in the 2001 interim rules. That comment expressed the belief that Congress intended with this issue, as with many other issues, to continue its longstanding deference to the States on the regulation of benefit design under health insurance. The comment also noted that the source-of-injury rule in the 2001 interim rules would not change the practice of plans or issuers with regard to the activities listed in the conference report and that the practice of plans and issuers in this regard would continue to be governed, as they had been before HIPAA, by market conditions and the States.

The Departments have not added the list of activities from the conference report to the source-of-injury rule in the final regulations. The statute itself is unclear about how benefits in general are affected by the nondiscrimination requirements and is silent with respect to source-of-injury exclusions in particular. The legislative history provides that the inclusion of evidence of insurability in the list of health factors is intended to ensure, among other things, that individuals are not excluded from health care coverage due to their participation in the activities listed in the conference report. This language is unclear because the term ''health care coverage'' could mean only eligibility to enroll for coverage under the plan, so that people who participate in the activities listed in the conference report could not be kept out of the plan but could be denied benefits for injuries sustained in those activities. Alternatively, it could mean eligibility both to enroll for coverage and for benefits, so that people who participate in those activities could not be kept out of the plan or denied benefits for injuries sustained in those activities. Without any indication in the statute and without a clear indication in the legislative history about this issue, and in light of the overall scheme of the statute, the Departments have made no changes to the regulations.

Moreover, to the extent not prohibited by State law, plans and issuers have been free to impose source-of-injury exclusions since before HIPAA. There is no reason to believe that plans and issuers will begin to impose source-of-injury exclusions with respect to the conference report activities merely because such exclusions are not prohibited under the 2001 interim rules and these final regulations.

Relationship of Prohibition on Nonconfinement Clauses to State Extension-of-Benefits Laws

Questions have arisen about the relationship of the prohibition on nonconfinement clauses in the 2001 interim rules to State extension-of-benefits laws. Plan provisions that deny an individual benefits based on the individual's confinement to a hospital or other health care institution at the time coverage would otherwise become effective are often called nonconfinement clauses. The 2001 interim rules prohibit such nonconfinement clauses. At the same time, many States require issuers to provide benefits beyond the date on which coverage under the policy would otherwise have ended to individuals who continue to be hospitalized beyond that date. Example 2 in the 2001 interim rules illustrated that a current issuer cannot impose a nonconfinement clause that restricts benefits for an individual based on whether that individual is entitled to continued benefits from a prior issuer pursuant to a State law requirement. The final sentence in Example 2 provided that HIPAA does not affect the prior issuer's obligation under State law and does not affect any State law governing coordination of benefits.

Under the laws of some States, a prior issuer has the obligation to provide health benefits to an individual confined to a hospital beyond the nominal end of the policy only if the hospitalization is not covered by a succeeding issuer. Because HIPAA requires a succeeding issuer to provide benefits that it would otherwise provide if not for the nonconfinement clause, in such a case State law would not require the prior issuer to provide benefits for a confinement beyond the nominal end of the policy. In this context, the statement in the final sentence of Example 2—that HIPAA does not affect the prior issuer's obligation under State law—could be read to conflict with the text of the rule and the main point of Example 2 that the succeeding issuer must cover the confinement.

There has been some dispute about how this potential ambiguity should be resolved. One interpretation is that the succeeding issuer can never impose a nonconfinement clause, and if this has the effect under State law of not requiring the prior issuer to provide benefits beyond the nominal end of the policy, then the prior issuer is not obligated to provide the extended benefits. This interpretation is consistent with the text of the nonconfinement rule and the main point of Example 2, though it could be read to conflict with the last sentence in Example 2.

Another interpretation proposed by some is that, consistent with the last sentence of Example 2, the obligation of a prior issuer is never affected by the HIPAA prohibition against nonconfinement clauses. Under this interpretation, if a State law conditions a prior issuer's obligation on there being no succeeding issuer with the obligation, then in order to leave the prior issuer's obligation unaffected under State law, the succeeding issuer could apply a nonconfinement clause and the HIPAA prohibition would not apply. This interpretation elevates a minor clarification at the end of an example to supersede not only the main point of the example but also the express text of the rule the example illustrates. This proposed interpretation is clearly contrary to the intent of the 2001 interim rules.

To avoid other interpretations, these final rules have replaced the final sentence of Example 2 in the 2001 interim rules with three sentences. The new language clarifies that: State law cannot change the succeeding issuer's obligation under HIPAA; a prior issuer may also have an obligation; and in a case in which a succeeding issuer has an obligation under HIPAA and a prior issuer has an obligation under State law to provide benefits for a confinement, any State laws designed to prevent more than 100 percent reimbursement, such as State coordination-of-benefits laws, continue to apply. Thus, under HIPAA a succeeding issuer cannot deny benefits to an individual on the basis of a nonconfinement clause. If this requirement under HIPAA has the effect under State law of removing a prior issuer's obligation to provide benefits, then the prior issuer is not obligated to provide benefits for the confinement. If under State law this requirement under HIPAA has the effect of obligating both the prior issuer and the succeeding issuer to provide benefits, then any State coordination-of-benefits law that is used to determine the order of payment and to prevent more than 100 percent reimbursement continues to apply.

Actively-at-Work Rules and Employer Leave Policies

The final regulations make no changes to the 2001 interim rules relating to actively-at-work provisions. Actively-at-

work clauses are generally prohibited, unless individuals who are absent from work due to any health factor are treated, for purposes of health coverage, as if they are actively at work. Nonetheless, a plan or issuer may distinguish between groups of similarly situated individuals (provided the distinction is not directed at individual participants or beneficiaries based on a health factor). Examples in the regulations illustrate that a plan or issuer may condition coverage on an individual's meeting the plan's requirement of working full-time (such as a minimum of 250 hours in a three-month period or 30 hours per week).

Several members of the regulated community have asked the Departments to clarify the applicability of the actively-at-work rules to various plan provisions that require an individual to perform a minimum amount of service per week in order to be eligible for coverage. It is the Departments' experience that much of the complexity in applying these rules derives from the myriad variations in the operation of employers' leave policies. The Departments believe that the 2001 interim rules provide adequate principles for applying the actively-at-work provisions to different types of eligibility provisions. In order to comply with these rules, a plan or issuer should apply the plan's service requirements consistently to all similarly situated employees eligible for coverage under the plan without regard to whether an employee is seeking eligibility to enroll in the plan or continued eligibility to remain in the plan. Accordingly, if a plan imposes a 30-hour-per-week requirement and treats employees on paid leave (including sick leave and vacation leave) who are already in the plan as if they are actively-at-work, the plan generally is required to credit time on paid leave towards satisfying the 30-hour-per-week requirement for employees seeking enrollment in the plan. Similarly, if a plan allowed employees to continue eligibility under the plan while on paid leave and for an additional period of 30 days while on unpaid leave, the plan is generally required to credit these same periods for employees seeking enrollment in the plan.[1] To help ensure consistency in application, plans and issuers may wish to clarify, in writing, how employees on various types of leave are treated for purposes of interpreting a service requirement. Without clear plan rules, plans and issuers might slip into inconsistent applications of their rules, which could lead to violations of the actively-at-work provisions.

Wellness Programs

The HIPAA nondiscrimination provisions do not prevent a plan or issuer from establishing discounts or rebates or modifying otherwise applicable copayments or deductibles in return for adherence to programs of health promotion and disease prevention. The 1997 interim rules refer to these programs as ''bona fide wellness programs.'' In the preamble to the 1997 interim rules, the Departments invited comments on whether additional guidance was needed concerning, among other things, the permissible standards for determining bona fide wellness programs. The Departments also stated their intent to issue further regulations on the nondiscrimination requirements and that in no event would the Departments take any enforcement action against a plan or issuer that had sought to comply in good faith with section 9802 of the Code, section 702 of ERISA, and section 2702 of the PHS Act before the publication of additional guidance. The preambles to the 2001 interim final and proposed rules noted that the period for nonenforcement in cases of good faith compliance with the HIPAA nondiscrimination provisions generally ended on the applicability date of those regulations but continued with respect to wellness programs until the issuance of further guidance. Accordingly, the nonenforcement policy of the Departments ends upon the applicability date of these final regulations for cases in which a plan or issuer fails to comply with the regulations but complies in good faith with an otherwise reasonable interpretation of the statute.

The HIPAA nondiscrimination provisions generally prohibit a plan or issuer from charging similarly situated individuals different premiums or contributions based on a health factor. These final regulations also generally prohibit a plan or issuer from requiring similarly situated individuals to satisfy differing deductible, copayment, or other cost-sharing requirements. However, the HIPAA nondiscrimination provisions do not prevent a plan or issuer from establishing premium discounts or rebates or modifying otherwise applicable copayments or deductibles in return for adherence to programs of health promotion and disease prevention. Thus, there is an exception to the general rule prohibiting discrimination based on a health factor if the reward, such as a premium discount or waiver of a cost-sharing requirement, is based on participation in a program of health promotion or disease prevention.

Both the 1997 interim rules and the 2001 proposed regulations refer to programs of health promotion and disease prevention allowed under this exception as ''bona fide wellness programs.'' These regulations generally adopt the provisions in the 2001 proposed rules. However, as more fully explained below, the final regulations no longer use the term ''bona fide'' in connection with wellness programs, add a description of wellness programs that do not have to satisfy additional requirements in order to comply with the nondiscrimination requirements, reorganize the four requirements from the proposed rules into five requirements, provide that the reward for a wellness program—coupled with the reward for other wellness programs with respect to the plan that require satisfaction of a standard related to a health factor—must not exceed 20% of the total cost of coverage under the plan, and add examples and make other changes to more accurately describe how the requirements apply.

The term ''wellness program''. Comments suggested that the use of the term ''bona fide'' with respect to wellness programs was confusing because, under the proposed rules, some wellness programs that are not ''bona fide'' within the narrow meaning of that term in the proposed rules nonetheless satisfy the HIPAA nondiscrimination requirements. To address this concern, these final regulations do not use the term ''bona fide wellness program.'' Instead the final regulations treat all programs of health promotion or disease prevention as wellness programs and specify which of those wellness programs must satisfy additional standards to comply with the nondiscrimination requirements.

Programs not subject to additional standards. The preamble to the 2001 proposed rules described a number of wellness programs that comply with the HIPAA nondiscrimination requirements without having to satisfy any additional standards. However, the text of the regulation did not make such a distinction. The Departments have received many comments and inquiries about whether programs like those described in the 2001 preamble would have to satisfy the additional standards in the proposed rules. As a result, a paragraph has been added to the final regulations defining and illustrating programs that comply with the nondiscrimination requirements without having to satisfy any additional

[1] These nondiscrimination rules do not address the applicability of the Family and Medical Leave Act to employers or group health coverage.

standards (assuming participation in the program is made available to all similarly situated individuals). Such programs are those under which none of the conditions for obtaining a reward is based on an individual satisfying a standard related to a health factor or under which no reward is offered. The final regulations include the following list to illustrate the wide range of programs that would not have to satisfy any additional standards to comply with the nondiscrimination requirements:

- A program that reimburses all or part of the cost for memberships in a fitness center.
- A diagnostic testing program that provides a reward for participation and does not base any part of the reward on outcomes.
- A program that encourages preventive care through the waiver of the copayment or deductible requirement under a group health plan for the costs of, for example, prenatal care or well-baby visits.
- A program that reimburses employees for the costs of smoking cessation programs without regard to whether the employee quits smoking.
- A program that provides a reward to employees for attending a monthly health education seminar.

Only programs under which any of the conditions for obtaining a reward is based on an individual satisfying a standard related to a health factor must meet the five additional requirements described in paragraph (f)(2) of these regulations in order to comply with the nondiscrimination requirements.

Limit on the reward. As under the proposed rules, the total reward that may be given to an individual under the plan for all wellness programs is limited. A reward can be in the form of a discount or rebate of a premium or contribution, a waiver of all or part of a cost-sharing mechanism (such as deductibles, copayments, or coinsurance), the absence of a surcharge, or the value of a benefit that would otherwise not be provided under the plan. Under the proposed rule, the reward for the wellness program, coupled with the reward for other wellness programs with respect to the plan that require satisfaction of a standard related to a health factor, must not exceed a specified percentage of the cost of employee-only coverage under the plan. The cost of employee-only coverage is determined based on the total amount of employer and employee contributions for the benefit package under which the employee is receiving coverage.

Comments indicated that in some circumstances dependents are permitted to participate in the wellness program in addition to the employee and that in those circumstances the reward should be higher to reflect dependent participation in the program. These final regulations provide that if, in addition to employees, any class of dependents (such as spouses or spouses and dependent children) may participate in the wellness program, the limit on the reward is based on the cost of the coverage category in which the employee and any dependents are enrolled.

The proposed regulations specified three alternative percentages: 10, 15, and 20. The final regulations provide that the amount of the reward may not exceed 20 percent of the cost of coverage. The proposed regulations solicited comments on the appropriate percentage. The percentage limit is designed to avoid a reward or penalty being so large as to have the effect of denying coverage or creating too heavy a financial penalty on individuals who do not satisfy an initial wellness program standard that is related to a health factor. Comments from one employer and two national insurance industry associations requested that the level of the percentage for rewards should provide plans and issuers maximum flexibility for designing wellness programs. Comments suggested that plans and issuers have a greater opportunity to encourage healthy behaviors through programs of health promotion and disease prevention if they are allowed flexibility in designing such programs. The 20 percent limit on the size of the reward in the final regulations allows plans and issuers to maintain flexibility in their ability to design wellness programs, while avoiding rewards or penalties so large as to deny coverage or create too heavy a financial penalty on individuals who do not satisfy an initial wellness program standard that is related to a health factor.

Reasonably-designed and at-least-once-per-year requirements. In the 2001 proposed rules, the second of four requirements was that the program must be reasonably designed to promote good health or prevent disease. The regulations also provided that a program did not meet this standard unless it gave individuals eligible for the program the opportunity to qualify for the reward at least once per year.

One comment suggested a safe harbor under which a wellness program that allows individuals to qualify at least once a year for the reward under the program would satisfy the ''reasonably designed'' standard without regard to other attributes of the program. The Departments have not adopted this suggestion. The ''reasonably designed'' standard is a broad standard. A wide range of factors could affect the reasonableness of the design of a wellness program, not just the frequency with which a participant could qualify for the reward. For example, a program might not be reasonably designed to promote good health or prevent disease if it imposed, as a condition to obtaining the reward, an overly burdensome time commitment or a requirement to engage in illegal behavior. The once-per-year requirement was included in the proposed rules merely as a bright-line standard for determining the minimum frequency that is consistent with a reasonable design for promoting good health or preventing disease. Thus, this second requirement of the proposed rules has been divided into two requirements in the final rules (the second and the third requirements). This division was made to emphasize that a program that must satisfy the additional standards in order to comply with the nondiscrimination requirements must allow eligible individuals to qualify for the reward at least once per year and must also be otherwise reasonably designed to promote health or prevent disease.

Comments also expressed other concerns about the ''reasonably designed'' requirement. While acknowledging that this standard provides significant flexibility, these comments were concerned that this flexible approach might also require substantial resources in evaluating all the facts and circumstances of a proposed program to determine whether it was reasonable in its design.

The ''reasonably designed'' requirement is intended to be an easy standard to satisfy. To make this clear, the final regulations have added language providing that if a program has a reasonable chance of improving the health of participants and it is not overly burdensome, is not a subterfuge for discriminating based on a health factor, and is not highly suspect in the method chosen to promote health or prevent disease, it satisfies this standard. There does not need to be a scientific record that the method promotes wellness to satisfy this standard. The standard is intended to allow experimentation in diverse ways of promoting wellness. For example, a plan or issuer could satisfy this standard by providing rewards to individuals who participated in a course of aromatherapy. The requirement of reasonableness in this standard prohibits bizarre, extreme, or illegal requirements in a wellness program.

One comment requested that the final regulations set forth one or more safe harbors that would demonstrate compliance with the ''reasonably designed'' standard. The examples in the proposed and final regulations present a range of wellness programs that are well within the borders of what is considered reasonably designed to promote health or prevent disease. The examples serve as safe harbors, so that a plan or issuer could adopt a program identical to one described as satisfying the wellness program requirements in the examples and be assured of satisfying the requirements in the regulations. Wellness programs similar to the examples also would satisfy the ''reasonably designed'' requirement. The Departments, though, do not want plans or issuers to feel constrained by the relatively narrow range of programs described by the examples but want plans and issuers to feel free to consider innovative programs for motivating individuals to make efforts to improve their health.

Reasonable alternative standard. Under the 2001 proposed rules and these final regulations, a wellness program that provides a reward requiring satisfaction of a standard related to a health factor must provide a reasonable alternative standard for obtaining the reward for certain individuals. This alternative standard must be available for individuals for whom, for that period, it is unreasonably difficult due to a medical condition to satisfy the otherwise applicable standard, or for whom, for that period, it is medically inadvisable to attempt to satisfy the otherwise applicable standard. A program does not need to establish the specific reasonable alternative standard before the program commences. It is sufficient to determine a reasonable alternative standard once a participant informs the plan that it is unreasonably difficult for the participant due to a medical condition to satisfy the general standard (or that it is medically inadvisable for the participant to attempt to achieve the general standard) under the program.

Some comments suggested that the requirement to devise and offer such a reasonable alternative standard potentially creates a significant burden on plans and issuers. Comments also suggested that the Departments should define a ''safe harbor'' for what constitutes a reasonable alternative standard, and that plans and issuers should be permitted to establish a single alternative standard, rather than having to tailor a standard for each individual for whom a reasonable alternative standard must be offered.

The Departments understand that, in devising wellness programs, plans and issuers strive to improve the health of participating individuals in a way that is not administratively burdensome or expensive. Under the proposed and final rules, it is permissible for a plan or issuer to devise a reasonable alternative standard by lowering the threshold of the existing health-factor-related standard, substituting a different standard, or waiving the standard. (For the alternative standard to be reasonable, the individual must be able to satisfy it without regard to any health factor.) To address the concern regarding the potential burden of this requirement, the final regulations explicitly provide that a plan or issuer can waive the health-factor-related standard for all individuals for whom a reasonable alternative standard must be offered. Additionally, the final regulations include an example demonstrating that a reasonable alternative standard could include following the recommendations of an individual's physician regarding the health factor at issue. Thus, a plan or issuer need not assume the burden of designing a discrete alternative standard for each individual for whom an alternative standard must be offered. An example also illustrates that if an alternative standard is health-factor-related (*i.e.*, walking three days a week for 20 minutes a day), the wellness program must provide an additional *alternative* standard (*i.e.*, following the individual's physician's recommendations regarding the health factor at issue) to the appropriate individuals.

The 2001 proposed rules included an example illustrating a smoking cessation program. Comments expressed concern that, under the proposed regulations, individuals addicted to nicotine who comply with a reasonable alternative standard year after year would always be entitled to the reward even if they did not quit using tobacco. Comments questioned whether this result is consistent with the goal of promoting wellness. The final regulations retain the example from the proposed rules. Comments noted that overcoming an addiction sometimes requires a cycle of failure and renewed effort. For those individuals for whom it remains unreasonably difficult due to an addiction, a reasonable alternative standard must continue to be offered. Plans and issuers can accommodate this health factor by continuing to offer the same or a new reasonable alternative standard. For example, a plan or issuer using a smoking cessation class might use different classes from year to year or might change from using a class to providing nicotine replacement therapy. These final regulations provide an additional example of a reasonable alternative standard of viewing, over a period of 12 months, a 12-hour video series on health problems associated with tobacco use.

Concern has been expressed that individuals might claim that it would be unreasonably difficult or medically inadvisable to meet the wellness program standard, when in fact the individual could meet the standard. The final rules clarify that plans may seek verification, such as a statement from a physician, that a health factor makes it unreasonably difficult or medically inadvisable for an individual to meet a standard.

Disclosure requirements. The fifth requirement for a wellness program that provides a reward requiring satisfaction of a standard related to a health factor is that all plan materials describing the terms of the program must disclose the availability of a reasonable alternative standard. This requirement is unchanged from the proposed rules. The 2001 proposed rules and these final regulations include the same model language that can be used to satisfy this requirement; examples also illustrate substantially similar language that would satisfy the requirement.

The final regulations retain the two clarifications of this requirement. First, plan materials are not required to describe specific reasonable alternative standards. It is sufficient to disclose that some reasonable alternative standard will be made available. Second, any plan materials that describe the general standard would also have to disclose the availability of a reasonable alternative standard. However, if the program is merely mentioned (and does not describe the general standard), disclosure of the availability of a reasonable alternative standard is not required.

Special Rule for Self-Funded Nonfederal Governmental Plans Exempted Under 45 CFR 146.180

The sponsor of a self-funded nonfederal governmental plan may elect under section 2721(b)(2) of the PHS Act and 45 CFR 146.180 to exempt its group health plan from the nondiscrimination requirements of section 2702 of the PHS Act and 45 CFR 146.121. Under the interim final nondiscrimination rules, if the plan sponsor subsequently chooses to bring the plan into compliance with the nondiscrimination requirements, the plan must provide notice to that effect to individuals who were denied

enrollment based on one or more health factors, and afford those individuals an opportunity, that continues for at least 30 days, to enroll in the plan. (An individual is considered to have been denied coverage if he or she failed to apply for coverage because, given an exemption election under 45 CFR 146.180, it was reasonable to believe that an application for coverage would have been denied based on a health factor). The notice must specify the effective date of compliance, and inform the individual regarding any enrollment restrictions that may apply under the terms of the plan once the plan comes into compliance. The plan may not treat the individual as a late enrollee or a special enrollee. These final regulations retain this transitional rule, and state that the plan must permit coverage to be effective as of the first day of plan coverage for which an exemption election under 45 CFR 146.180 (with regard to the nondiscrimination requirements) is no longer in effect. (These final regulations delete the reference giving the plan the option of having the coverage start July 1, 2001, because that option implicated the expired transitional rules regarding individuals who were denied coverage based on a health factor prior to the applicability of the 2001 interim rules. As previously stated, those transitional rules have not been republished in these final regulations.) Additionally, the examples illustrating how the special rule for nonfederal governmental plans operates have been revised slightly.

Applicability Date

These regulations apply for plan years beginning on or after July 1, 2007. Until the applicability date for this regulation, plans and issuers are required to comply with the corresponding sections of the regulations previously published in the **Federal Register** (66 FR 1378) and other applicable regulations.

III. Economic Impact and Paperwork Burden

Summary—Department of Labor and Department of Health and Human Services

HIPAA's nondiscrimination provisions generally prohibit group health plans and group health insurance issuers from discriminating against individuals in eligibility or premiums on the basis of health factors. The Departments have crafted these regulations to secure the protections from discrimination as intended by Congress in as economically efficient a manner as possible, and believe that the economic benefits of the regulations justify their costs.

The primary economic benefits associated with securing HIPAA's nondiscrimination provisions derive from increased access to affordable group health plan coverage for individuals with health problems. Increased access benefits both newly-covered individuals and society at large. It fosters expanded health coverage, timelier and more complete medical care, better health outcomes, and improved productivity and quality of life. This is especially true for the individuals most affected by HIPAA's nondiscrimination provisions—those with adverse health conditions. Denied health coverage, individuals in poorer health are more likely to suffer economic hardship, to forego badly needed care for financial reasons, and to suffer adverse health outcomes as a result. For them, gaining health coverage is more likely to mean gaining economic security, receiving timely, quality care, and living healthier, more productive lives. Similarly, participation by these individuals in wellness programs fosters better health outcomes, increases productivity and quality of life, and has the same outcome in terms of overall gains in economic security. The wellness provisions of these regulations will result in fewer instances in which wellness programs shift costs to high-risk individuals, and more instances in which these individuals succeed at improving health habits and health.

Additional economic benefits derive directly from the improved clarity provided by the regulations. The regulations will reduce uncertainty and costly disputes and promote confidence in health benefits' value, thereby improving labor market efficiency and fostering the establishment and continuation of group health plans and their wellness program provisions.

The Departments estimate that the dollar value of the expanded coverage attributable to HIPAA's nondiscrimination provisions is approximately $850 million annually. The Departments believe that the cost of HIPAA's nondiscrimination provisions is borne by covered workers. Costs can be shifted to workers through increases in employee premium shares or reductions (or smaller increases) in pay or other components of compensation, by increases in deductibles or other cost sharing, or by reducing the richness of health benefits. Whereas the benefits of the nondiscrimination provisions are concentrated in a relatively small population, the costs are distributed broadly across plans and enrollees.

The proposed rules on wellness programs impose certain requirements on wellness programs providing rewards that would otherwise discriminate based on a health factor in order to ensure that the exception for wellness programs does not eviscerate the general rule contained in HIPAA's nondiscrimination provisions. Costs associated with the wellness program provisions are justified by the benefits received by those individuals now able, through alternative standards, to participate in such programs. Because the new provisions limit rewards for wellness programs that require an individual to satisfy a standard related to a health factor to 20 percent of the cost of single coverage (with additional provisions related to rewards that apply also to classes of dependents), some rewards will be reduced and this reduction might compel some individuals to decline coverage. The number of individuals affected, however, is thought to be small. Moreover, the Departments estimate that the cost of the reduction in rewards that would exceed the limit will amount to only $6 million. Establishing reasonable alternative standards, which should increase coverage for those now eligible for discounts as well as their participation in programs designed to promote health or prevent disease, is expected to cost between $2 million to $9 million. The total costs should therefore fall within a range between $8 million and $15 million annually.

New economic costs may be also incurred in connection with the wellness provisions if reductions in rewards result in the reduction of wellness programs' effectiveness, but this effect is expected to be very small. Other new economic costs may be incurred by plan sponsors to make available reasonable alternative standards where required. The Departments are unable to estimate these costs due to the variety of options available to plan sponsors for bringing wellness programs into compliance with these rules.

Executive Order 12866—Department of Labor and Department of Health and Human Services

Under Executive Order 12866, the Departments must determine whether a regulatory action is ''significant'' and therefore subject to the requirements of the Executive Order and subject to review by the Office of Management and Budget (OMB). Under section 3(f), the order defines a ''significant regulatory action'' as an action that is likely to result in a rule (1) having an annual effect on the economy of $100 million

or more, or adversely and materially affecting a sector of the economy, productivity, competition, jobs, the environment, public health or safety, or State, local or tribal governments or communities (also referred to as ''economically significant''); (2) creating serious inconsistency or otherwise interfering with an action taken or planned by another agency; (3) materially altering the budgetary impacts of entitlement grants, user fees, or loan programs or the rights and obligations of recipients thereof; or (4) raising novel legal or policy issues arising out of legal mandates, the President's priorities, or the principles set forth in the Executive Order.

Pursuant to the terms of the Executive Order, this action is ''economically significant'' and subject to OMB review under Section 3(f) of the Executive Order. Consistent with the Executive Order, the Departments have assessed the costs and benefits of this regulatory action. The Departments performed a comprehensive, unified analysis to estimate the costs and benefits attributable to the final regulations for purposes of compliance with the Executive Order 12866, the Regulatory Flexibility Act, and the Paperwork Reduction Act. The Departments' analyses and underlying assumptions are detailed below. The Departments believe that the benefits of the final regulations justify their costs.

Regulatory Flexibility Act—Department of Labor and Department of Health and Human Services

The Regulatory Flexibility Act (5 U.S.C. 601 *et seq.*) (RFA) imposes certain requirements with respect to federal rules that are subject to the notice and comment requirements of section 553(b) of the Administrative Procedure Act (5 U.S.C. 551 *et seq.*) and likely to have a significant economic impact on a substantial number of small entities. Unless an agency certifies that a final rule will not have a significant economic impact on a substantial number of small entities, section 604 of the RFA requires that the agency present a final regulatory flexibility analysis (FRFA) at the time of the publication of the notice of final rulemaking describing the impact of the rule on small entities. Small entities include small businesses, organizations, and governmental jurisdictions.

Because the 2001 interim rules were issued as final rules and not as a notice of proposed rulemaking, the RFA did not apply and the Departments were not required to either certify that the rule would not have a significant impact on a substantial number of small entities or conduct a regulatory flexibility analysis. The Departments nonetheless crafted those regulations in careful consideration of effects on small entities, and conducted an analysis of the likely impact of the rules on small entities. This analysis was detailed in the preamble to the interim final rule.

The Departments also conducted an initial regulatory flexibility analysis in connection with the proposed regulations on wellness programs and present here a FRFA with respect to the final regulations on wellness programs pursuant to section 604 of the RFA. For purposes of their unified FRFA, the Departments adhered to EBSA's proposed definition of small entities. The Departments consider a small entity to be an employee benefit plan with fewer than 100 participants. The basis of this definition is found in section 104(a)(2) of ERISA, which permits the Secretary of Labor to prescribe simplified annual reports for pension plans that cover fewer than 100 participants. The Departments believe that assessing the impact of this final rule on small plans is an appropriate substitute for evaluating the effect on small entities as that term is defined in the RFA. This definition of small entity differs, however, from the definition of small business based on standards promulgated by the Small Business Administration (13 CFR 121.201) pursuant to the Small Business Act (15 U.S.C. 631 *et seq.*). Because of this difference, the Departments requested comments on the appropriateness of this size standard for evaluating the impact of the proposed regulations on small entities. No comments were received.

The Departments estimate that 35,000 plans with fewer than 100 participants vary employee premium contributions or cost-sharing across similarly situated individuals based on health factors.[2] While this represents just one percent of all small plans, the Departments believe that because of the large number of plans, this may constitute a substantial number of small entities. The Departments also note that at least some premium rewards may be large. Premium discounts associated with wellness programs are believed to range as high as $920 per affected participant per year. Therefore, the Departments believe that the impact of this regulation on at least some small entities may be significant.

Under these final regulations on wellness programs, such programs are not subject to additional requirements if none of the conditions for obtaining a reward is based on an individual satisfying a standard that is related to a health factor (or if a wellness program does not provide a reward).

Where a condition for obtaining a reward is based on an individual satisfying a standard related to a health factor, the wellness program will not violate the nondiscrimination provisions if additional requirements are met. The first requirement limits the maximum allowable reward or total of rewards to a maximum of 20 percent of the cost of employee-only coverage under the plan (with additional provisions related to rewards that apply also to classes of dependents). The magnitude of the limit is intended to offer plans maximum flexibility while avoiding the effect of denying coverage or creating an excessive financial penalty for individuals who cannot satisfy the initial standard based on a health factor.

The Departments estimate that 4,000 small plans and 22,000 small plan participants will be affected by this limit.[3] These plans can comply with this requirement by reducing the discount to the regulated maximum. This will result in an increase in premiums (or decrease in cost-sharing) by about $1.3 million on aggregate for those participants receiving qualified premium discounts [4] This constitutes an ongoing, annual cost of $338 on average per affected plan. The regulation does not limit small plans' flexibility to shift this cost to all participants in the form

[2] Based on tabulations of the 2003 Medical Expenditure Panel Survey Insurance Component (MEPS-IC) and 1997 Survey of Government Finances (SGF), the Departments estimate that roughly 2.4 million small health plans exist. Of these, 1.2 percent of these plans are believed to vary premiums (as suggested in a 1993 study by the Robert Woods Johnson Foundation) while .5 percent are thought to vary benefits (as suggested in, *Spec Summary. United States Salaried Managed Health/Health Promotion Initiatives, 2003–2004,* Hewitt Associates, July, 2003.). Assuming that half of those that vary premiums also vary benefits, the Departments conclude that 1.5 percent of all small plans are potentially affected by the statute.

[3] Simulations run by the Departments suggest that 10.7 percent of all plans exceed the capped premium discount. For the purposes of this analysis, it was assumed that the affected plans were proportionally distributed between large and small plans. However, it is likely that larger plans would have more generous welfare programs and therefore, this estimate is likely an upper bound.

[4] Estimate is based on the 2003–04 Hewitt Study and various measures of the general health of the labor force suggest that roughly 30 percent of health plan participants will not qualify for the discount. While plans exceeding the capped discount could meet the statutes requirements by transferring the excess amount, on average $57, to the non-qualifying participants, given current trends in the health insurance industry, it is considered more likely that plans would instead lower the amount of the discount given to the 70 percent of participants that qualify. This transfer would roughly total $1.3 million dollars.

of small premium increases or benefit cuts.

The second requirement provides that wellness programs must be reasonably designed to promote health or prevent disease. Comments received by the Departments and available literature on employee wellness programs suggest that existing wellness programs generally satisfy this requirement. The requirement therefore is not expected to compel small plans to modify existing wellness programs.

The third requirement is that the program give individuals eligible for the program the opportunity to qualify for the reward at least once per year. This provision was included within the terms of the requirements for reasonable design in the proposed regulations. The Departments did not anticipate that a cost would arise from the requirements related to reasonable design when taken together, but requested comments on their assumptions. Because no comments were received, the Departments have not attributed a cost to this provision of the final rule.

The fourth requirement provides that rewards under wellness programs must be available to all similarly situated individuals. Rewards are not available to similarly situated individuals unless a program allows a reasonable alternative standard or waiver of the applicable standard, if it is unreasonably difficult due to a medical condition or medically inadvisable to attempt to satisfy the otherwise applicable standard. The Departments believe that some small plans' wellness programs do not currently satisfy this requirement and will have to be modified.

The Departments estimate that 3,000 small plans' wellness programs include initial standards that may be unreasonably difficult due to a medical condition or medically inadvisable for some participants to meet.[5] These plans are estimated to include 4,000 participants for whom the standard is in fact unreasonably difficult due to a medical condition or medically inadvisable to meet.[6] Satisfaction of alternative standards by these participants will result in cost increases for plans as these individuals qualify for discounts or avoid surcharges. If all of these participants request and then satisfy an alternative standard, the cost would amount to about $2 million annually. If one-half request alternative standards and one-half of those meet them, the cost would be $0.5 million.[7]

In addition to the costs associated with new participants qualifying for discounts through alternative standards, small plans may also incur new economic costs by simply providing alternative standards. However, plans can satisfy this requirement by providing inexpensive alternative standards and have the flexibility to select whatever reasonable alternative standard is most desirable or cost effective. Plans not wishing to provide alternative standards also have the option of eliminating health status-based variation in employee premiums or waiving standards for individuals for whom the program standard is unreasonably difficult due to a medical condition or medically inadvisable to meet. The Departments expect that the economic cost to provide alternatives combined with the associated cost of granting discounts or waiving surcharges will not exceed the cost associated with granting discounts or waiving surcharges for all participants who qualify for an alternative. Those costs are estimated here at $0.5 million to $2 million, or about $160 to $650 per affected plan. Plans have the flexibility to pass back some or all of this cost to all participants in the form of small premium increases or benefit cuts.

The fifth requirement provides that plan materials describing wellness program standards disclose the availability of reasonable alternative standards. This requirement will affect the approximately 4,000 small plans that condition rewards on satisfaction of a standard. These plans will incur economic costs to revise affected plan materials. The estimated 1,000 to 4,000 small plan participants who will succeed at satisfying these alternative standards will benefit from these disclosures. The disclosures need not specify what alternatives are available unless the plan describes the initial standard in writing and the regulation provides sample language that can be used to satisfy this requirement. Legal requirements other than this regulation generally require plans and issuers to maintain accurate materials describing plans. Plans and issuers generally update such materials on a regular basis as part of their normal business practices. This requirement is expected to represent a negligible fraction of the ongoing, normal cost of updating plans' materials. This analysis therefore attributes no cost to this requirement.

Paperwork Reduction Act—Department of Labor and Department of the Treasury

The 2001 interim rules included an information collection request (ICR) related to the notice of the opportunity to enroll in a plan where coverage had been denied based on a health factor before the effective date of HIPAA. That ICR was approved under OMB control numbers 1210–0120 and 1545–1728, and was subsequently withdrawn from OMB inventory because the notice, if applicable, was to have been provided only once.

The proposed regulations on wellness programs did not include an information collection request. Like the proposed regulations, the final regulations include a requirement that, if a plan's wellness program requires individuals to meet a standard related to a health factor in order to qualify for a reward and if the plan materials describe this standard, the materials must also disclose the availability of a reasonable alternative standard. If plan materials merely mention that a program is available, the disclosure relating to alternatives is not required. The regulations include samples of disclosures that could be used to satisfy the requirements of the final regulations.

In concluding that the proposed rules did not include an information collection request, the Departments reasoned that much of the information required was likely already provided as a result of state and local mandates or the usual business practices of group health plans and group health insurance issuers in connection with the offer and promotion of health care coverage. In addition, the sample disclosures would enable group health plans to make any modifications necessary with minimal effort.

Finally, although neither the proposed or final regulations include a new information collection request, the regulations might have been interpreted to require a revision to an existing collection of information. Administrators of group health plans covered under Title I of ERISA are generally required to make certain disclosures about the terms of a plan and material changes in terms through a Summary Plan Description (SPD) or

[5] The 2003–04 Hewitt Survey finds that 9 percent of its respondents require participants to achieve a certain health standard to be eligible for discounts. Based on assumptions about the general health of the labor force, approximately 2.3 percent of health plan participants may and 1.5 percent will find these standards difficult to achieve.

[6] Many small plans are very small, having fewer than 10 participants. Hence, many small plans will include no participant for whom either of these standards apply.

[7] Simulations run by the Departments find that the average premium discount for all health plans after the cap is enforced will be approximately $450 dollars. This average is then applied to the upper and lower bounds of those able to pass the alternative standards in small health plans in order to determine the upper and lower bound of the transfer cost.

Summary of Material Modifications (SMM) pursuant to sections 101(a) and 102(a) of ERISA and related regulations. The ICR related to the SPD and SMM is currently approved under OMB control number 1210–0039. While these materials may in some cases require revisions to comply with the final regulations, the associated burden is expected to be negligible, and is in fact already accounted for in connection with the SPD and SMM ICR by a burden estimation methodology that anticipates ongoing revisions. Therefore, any change to the existing information collection request arising from these final regulations is not substantive or material. Accordingly, no application for approval of a revision to the existing ICR has been made to OMB in connection with these final regulations.

Paperwork Reduction Act—Department of Health and Human Services

Collection of Information Requirements

Under the Paperwork Reduction Act of 1995, we are required to provide notice in the **Federal Register** and solicit public comment before a collection of information requirement is submitted to the Office of Management and Budget (OMB) for review and approval. In order to fairly evaluate whether an information collection should be approved by OMB, section 3506(c)(2)(A) of the Paperwork Reduction Act of 1995 requires that we solicit comment on the following issues:

- The need for the information collection and its usefulness in carrying out the proper functions of our agency.
- The accuracy of our estimate of the information collection burden.
- The quality, utility, and clarity of the information to be collected.
- Recommendations to minimize the information collection burden on the affected public, including automated techniques.

Department regulations in 45 CFR 146.121(i)(4) require that if coverage has been denied to any individual because the sponsor of a self-funded nonfederal governmental plan has elected under 45 CFR Part 146 to exempt the plan from the requirements of this section, and the plan sponsor subsequently chooses to bring the plan into compliance, the plan must: notify the individual that the plan will be coming into compliance; afford the individual an opportunity to enroll that continues for at least 30 days, specify the effective date of compliance; and inform the individual regarding any enrollment restrictions that may apply once the plan is in compliance.

The burden associated with this requirement was approved by The Office of Management and Budget (OMB) under OMB control number 0938–0827, with a current expiration date of April 30, 2009.

In addition, CMS–2078–P, published in the **Federal Register** on January 8, 2001 (66 FR 1421) describes the bona fide wellness programs and specifies their criteria. Section 146.121(f)(1)(iv) further stipulates that the plan or issuer disclose in all plan materials describing the terms of the program the availability of a reasonable alternative standard to qualify for the reward under a wellness program. However, in plan materials that merely mention that a program is available, without describing its terms, the disclosure is not required.

The burden associated with this requirement was approved by OMB control number 0938–0819, with a current expiration date of April 30, 2009.

Special Analyses—Department of the Treasury

Notwithstanding the determinations of the Departments of Labor and of Health and Human Services, for purposes of the Department of the Treasury it has been determined that this Treasury decision is not a significant regulatory action. Therefore, a regulatory assessment is not required. It has also been determined that section 553(b) of the Administrative Procedure Act (5 U.S.C. chapter 5) does not apply to these regulations, and, because these regulations do not impose a collection of information on small entities, a Regulatory Flexibility Analysis under the Regulatory Flexibility Act (5 U.S.C. chapter 6) is not required. Pursuant to section 7805(f) of the Code, the notice of proposed rulemaking preceding these regulations was submitted to the Small Business Administration for comment on its impact on small business.

Congressional Review Act

These final regulations are subject to the Congressional Review Act provisions of the Small Business Regulatory Enforcement Fairness Act of 1996 (5 U.S.C. 801 *et seq.*) and have been transmitted to Congress and the Comptroller General for review. These regulations, however, constitute a ''major rule,'' as that term is defined in 5 U.S.C. 804, because they are likely to result in (1) an annual effect on the economy of $100 million or more; (2) a major increase in costs or prices for consumers, individual industries, or federal, State or local government agencies, or geographic regions; or (3) significant adverse effects on competition, employment, investment, productivity, innovation, or on the ability of United States-based enterprises to compete with foreign-based enterprises in domestic or export markets.

Unfunded Mandates Reform Act

For purposes of the Unfunded Mandates Reform Act of 1995 (Pub. L. 104–4), as well as Executive Order 12875, these final regulations do not include any federal mandate that may result in expenditures by state, local, or tribal governments, nor does it include mandates which may impose an annual burden of $100 million or more on the private sector.

Federalism Statement—Department of Labor and Department of Health and Human Services

Executive Order 13132 outlines fundamental principles of federalism, and requires the adherence to specific criteria by federal agencies in the process of their formulation and implementation of policies that have ''substantial direct effects'' on the States, the relationship between the national government and States, or on the distribution of power and responsibilities among the various levels of government. Federal agencies promulgating regulations that have these federalism implications must consult with State and local officials, and describe the extent of their consultation and the nature of the concerns of State and local officials in the preamble to the regulation.

In the Departments' view, these final regulations have federalism implications, because they have substantial direct effects on the States, the relationship between the national government and States, or on the distribution of power and responsibilities among various levels of government. However, in the Departments' view, the federalism implications of these final regulations are substantially mitigated because, with respect to health insurance issuers, the vast majority of States have enacted laws, which meet or exceed the federal HIPAA standards prohibiting discrimination based on health factors.

In general, through section 514, ERISA supersedes State laws to the extent that they relate to any covered employee benefit plan, and preserves State laws that regulate insurance, banking, or securities. While ERISA prohibits States from regulating a plan as an insurance or investment company or bank, HIPAA added a new preemption provision to ERISA (as well as to the PHS Act) narrowly preempting State requirements for group health insurance coverage. With respect to the

HIPAA nondiscrimination provisions, States may continue to apply State law requirements except to the extent that such requirements prevent the application of the portability, access, and renewability requirements of HIPAA, which include HIPAA's nondiscrimination requirements provisions that are the subject of this rulemaking.

In enacting these new preemption provisions, Congress intended to preempt State insurance requirements only to the extent that those requirements prevent the application of the basic protections set forth in HIPAA. HIPAA's Conference Report states that the conferees intended the narrowest preemption of State laws with regard to health insurance issuers. H.R. Conf. Rep. No. 736, 104th Cong. 2d Session 205 (1996). State insurance laws that are more stringent than the federal requirements are unlikely to ''prevent the application of'' the HIPAA nondiscrimination provisions, and be preempted. Accordingly, States have significant latitude to impose requirements on health insurance issuers that are more restrictive than the federal law.

Guidance conveying this interpretation was published in the **Federal Register** on April 8, 1997. (62 FR 16904) and on December 30, 2004 (62 FR 78720). These final regulations clarify and implement the statute's minimum standards and do not significantly reduce the discretion given the States by the statute. Moreover, the Departments understand that the vast majority of States have requirements that meet or exceed the minimum requirements of the HIPAA nondiscrimination provisions.

HIPAA provides that the States may enforce the provisions of HIPAA as they pertain to issuers, but that the Secretary of Health and Human Services must enforce any provisions that a State fails to substantially enforce. To date, HHS has had occasion to enforce the HIPAA nondiscrimination provisions in only two States and currently enforces the nondiscrimination provisions in only one State in accordance with that State's specific request to do so. When exercising its responsibility to enforce provisions of HIPAA, HHS works cooperatively with the State for the purpose of addressing the State's concerns and avoiding conflicts with the exercise of State authority.[8] HHS has developed procedures to implement its enforcement responsibilities, and to afford the States the maximum opportunity to enforce HIPAA's requirements in the first instance. HHS's procedures address the handling of reports that States may not be enforcing HIPAA's requirements, and the mechanism for allocating enforcement responsibility between the States and HHS. In compliance with Executive Order 13132's requirement that agencies examine closely any policies that may have federalism implications or limit the policy making discretion of the States, DOL and HHS have engaged in numerous efforts to consult with and work cooperatively with affected State and local officials.

For example, the Departments sought and received input from State insurance regulators and the National Association of Insurance Commissioners (NAIC). The NAIC is a non-profit corporation established by the insurance commissioners of the 50 States, the District of Columbia, and the four U.S. territories. In most States the Insurance Commissioner is appointed by the Governor, in approximately 14 States the insurance commissioner is an elected official. Among other activities, it provides a forum for the development of uniform policy when uniformity is appropriate. Its members meet, discuss, and offer solutions to mutual problems. The NAIC sponsors quarterly meetings to provide a forum for the exchange of ideas, and in-depth consideration of insurance issues by regulators, industry representatives, and consumers. CMS and Department of Labor staff have attended the quarterly meetings consistently to listen to the concerns of the State Insurance Departments regarding HIPAA issues, including the nondiscrimination provisions. In addition to the general discussions, committee meetings and task groups, the NAIC sponsors the standing CMS/DOL meeting on HIPAA issues for members during the quarterly conferences. This meeting provides CMS and the Department of Labor with the opportunity to provide updates on regulations, bulletins, enforcement actions and outreach efforts regarding HIPAA.

In addition, the Departments specifically consulted with the NAIC in developing these final regulations. Through the NAIC, the Departments sought and received the input of State insurance departments regarding certain insurance rating practices and late enrollment issues. The Departments employed the States' insights on insurance rating practices in developing the provisions prohibiting ''list-billing,'' and their experience with late enrollment in crafting the regulatory provision clarifying the relationship between the nondiscrimination provisions and late enrollment. Specifically, the regulations clarify that while late enrollment, if offered by a plan, must be available to all similarly situated individuals regardless of any health factor, an individual's status as a late enrollee is not itself within the scope of any health factor.

The Departments have also cooperated with the States in several ongoing outreach initiatives, through which information on HIPAA is shared among federal regulators, State regulators, and the regulated community. In particular, the Department of Labor has established a Health Benefits Education Campaign with more than 70 partners, including CMS, the NAIC and many business and consumer groups. CMS has sponsored conferences with the States—the Consumer Outreach and Advocacy conferences in March 1999 and June 2000 and the Implementation and Enforcement of HIPAA National State-federal Conferences in August 1999, 2000, 2001, 2002, and 2003. Furthermore, both the Department of Labor and CMS Web sites offer links to important State Web sites and other resources, facilitating coordination between the State and federal regulators and the regulated community.

Throughout the process of developing these regulations, to the extent feasible within the specific preemption provisions of HIPAA, the Departments have attempted to balance the States' interests in regulating health insurance issuers, and Congress's intent to provide uniform minimum protections to consumers in every State. By doing so, it is the Departments' view that they have complied with the requirements of Executive Order 13132.

Pursuant to the requirements set forth in section 8(a) of Executive Order 13132, and by the signatures affixed to these regulations, the Departments certify that the Employee Benefits Security Administration and the Centers for Medicare & Medicaid Services have complied with the requirements of Executive Order 13132 for the attached final regulation, Final Rules for Nondiscrimination in Health Coverage in the Group Market (RIN 1210–AA77 and RIN 0938–AI08), in a meaningful and timely manner.

[8] This authority applies to insurance issued with respect to group health plans generally, including plans covering employees of church organizations. Thus, this discussion of federalism applies to all group health insurance coverage that is subject to the PHS Act, including those church plans that provide coverage through a health insurance issuer (but not to church plans that do not provide coverage through a health insurance issuer).

Unified Analysis of Costs and Benefits

1. Introduction

HIPAA's nondiscrimination provisions generally prohibit group health plans and group health insurance issuers from discriminating against individuals on the basis of health factors. The primary effect and intent of the provision is to increase access to affordable group health coverage for individuals with health problems. This effect, and the economic costs and benefits attendant to it, primarily flows from the statutory provisions of HIPAA that this regulation implements. However, the statute alone leaves room for varying interpretations of exactly which practices are prohibited or permitted at the margin. These regulations draw on the Departments' authority to clarify and interpret HIPAA's statutory nondiscrimination provisions in order to secure the protections intended by Congress for plan participants and beneficiaries. The Departments crafted them to satisfy this mandate in as economically efficient a manner as possible, and believe that the economic benefits of the regulations justify their costs. The analysis underlying this conclusion takes into account both the effect of the statute and the impact of the discretion exercised in the regulations.

The nondiscrimination provisions of the HIPAA statute and of these regulations generally apply to both group health plans and group health insurance issuers. Economic theory predicts that issuers will pass their costs of compliance back to plans, and that plans may pass some or all of issuers' and their own costs of compliance to participants. This analysis is carried out in light of this prediction.

These final regulations are needed to clarify and interpret the HIPAA nondiscrimination provisions under section 702 of ERISA, section 2702 of the PHS Act, and section 9802 of the Code, and to ensure that group health plans and group health insurance issuers do not discriminate against individual participants or beneficiaries based on any health factors with respect to health care coverage and premiums. The 2001 interim rules provided additional guidance to explain the application of the statute to benefits, to clarify the relationship between the HIPAA nondiscrimination provisions and the HIPAA preexisting condition exclusion limitations, to explain the applications of these provisions to premiums, to describe similarly situated individuals, to explain the application of the provisions to actively-at-work and nonconfinement clauses, to clarify that more favorable treatment of individuals with medical needs generally is permitted, and to describe plans' and issuers' obligations with respect to plan amendments.[9] These final regulations clarify the relationship between the source-of-injury rules and the timing of a diagnosis of a medical condition and add an example to illustrate how the benefits rules apply to the carryover feature of HRAs.

The proposed rules on wellness programs were issued in order to ensure that the exception for wellness programs would not contravene HIPAA's nondiscrimination provisions. With respect to wellness programs, these final regulations clarify some ambiguities in the proposed rules, make some changes in terminology and organization, and add a description of wellness programs not required to satisfy additional standards. The final rules also set the maximum reward for wellness programs that require satisfaction of a standard at 20 percent of the cost of single coverage (with additional provisions related to rewards that apply also to classes of dependents), where the proposed rules had stated the limit in terms of a range of percentages.

Because the 2001 interim rules and proposed regulations on wellness programs were originally issued as separate rulemaking actions, the Departments estimated their economic impacts separately. The costs and benefits of the statutory nondiscrimination provisions and the 2001 interim rules are again described separately from the wellness program provisions here, due to both differing baselines for the measurement of impact, and to reliance on different types of information and assumptions in the analyses.

[9] The Departments' estimate of the economic impact of the 2001 interim final regulations was published at 66 FR 1393 (January 8, 2001). These one-time costs were already absorbed by plans and issuers and are not discussed in this analysis. In fact, the only notice requirement in the 2001 interim final regulations was deleted from the final regulations because the time period for compliance has passed, with one small exception. Certain self-insured, nonfederal governmental plans that had opted out of the HIPAA nondiscrimination provisions under Section 2721(b)(2) of the PHS Act and that have since decided to opt back in may be required to send a notice to individuals previously denied coverage due to a health factor. However, to date, only approximately 550 such plans have notified CMS that they are opting-out of the HIPAA nondiscrimination provisions and CMS does not receive information regarding a plan's decision to opt back in. The Departments estimate that the number of plans having done this is very small and, therefore, estimate that the impact of the notice provision on such plans is too small to calculate.

2. Costs and Benefits of HIPAA's Nondiscrimination Provisions

The Departments have evaluated the impacts of HIPAA's nondiscrimination provisions. The nondiscrimination provisions of the 2001 interim final rules were estimated to result in costs of about $20 million to amend plans, revise plan informational materials, and notify employees previously denied coverage on the basis of a health factor of enrollment opportunities. Because these costs were associated with one-time activities that were required to be completed by the applicability date of the 2001 interim rules, these costs have been fully defrayed.

The primary statutory economic benefits associated with the HIPAA nondiscrimination provisions derive from increased access to affordable group health plan coverage for individuals whose health factors had previously restricted their participation in such plans. Expanding access entails both benefits and costs. Newly-covered individuals, who previously had to purchase similar services out-of-pocket, reap a simple and direct financial gain. In addition, these individuals may be induced to consume more (or different) health care services, reaping a benefit which has financial value, and which in some cases will produce additional indirect benefits both to the individual (improved health) and possibly to the economy at large.[10]

[10] Individuals without health insurance are less likely to get preventive care and less likely to have a regular source of care. A lack of health insurance generally increases the likelihood that needed medical treatment will be forgone or delayed. Forgoing or delaying care increases the risk of adverse health outcomes. These adverse outcomes in turn generate higher medical costs, which are often shifted to public funding sources (and therefore to taxpayers) or to other payers. They also erode productivity and the quality of life. Improved access to affordable group health coverage for individuals with health problems under HIPAA's nondiscrimination provisions will lead to more insurance coverage, timelier and fuller medical care, better health outcomes, and improved productivity and quality of life. This is especially true for the individuals most affected by HIPAA's nondiscrimination provisions—those with adverse health conditions. Denied insurance, individuals in poorer health are more likely to suffer economic hardship, to forgo badly needed care for financial reasons, and to suffer adverse health outcomes as a result. For them, gaining insurance is more likely to mean gaining economic security, receiving timely, quality care, and living healthier, more productive lives. For an extensive discussion of the consequences of uninsurance, see: ''The Uninsured and their Access to Health Care'' (2004). *The Kaiser Commission on Medicaid and the Uninsured*, November; ''Insuring America's Health'', (2004). *Institute of Medicine*; ''Health Policy and the Uninsured'' (2004) edited by Catherine G. McLaughlin. Washington, DC: Urban Institute Press; Miller, Wilhelmine et al (2004) ''Covering the Uninsured: What is it Worth,'' *Health Affairs*, March: w157–w167.

Inclusion of these newly-covered individuals, though, will increase both premiums and claims costs incurred by group health plans. Economic theory predicts that these costs will ultimately be shifted to all plan participants or employees, either through an increased share of insurance costs, or lowered compensation.[11] If the number of newly-covered individuals is small relative to the total number of plan participants and costs are distributed evenly, then the increased burden for each individual should be minimal. However, it is unclear how previously-covered individuals will respond to subsequent changes in their benefits package and if their response will have unforeseen economic costs.[12] The HIPAA nondiscrimination cost is estimated to be substantial. Annual group health plan costs average approximately $7,100 per-participant,[13] and it is likely that average costs would be higher for individuals who had been denied coverage due to health factors. Prior to HIPAA's enactment, less than one-tenth of one percent of employees, or roughly 120,000 in today's labor market, were denied employment-based coverage annually because of health factors.[14] A simple assessment suggests that the total cost of coverage for such employees could be $850 million. However, this estimated statutory transfer is small relative to the overall cost of employment-based health coverage. Group health plans will spend over $620 billion this year to cover approximately 174 million employees and their dependents.[15] Estimated costs under HIPAA's nondiscrimination provisions represent a very small fraction of one percent of total group health plan expenditures.

3. Costs and Benefits of Finalizing the 2001 Interim Rules

Prohibiting Discrimination

Many of the provisions of these regulations serve to specify more precisely than the statute alone exactly what practices are prohibited by HIPAA as unlawful discrimination in eligibility or employee premiums among similarly situated employees. For example, under the regulations, eligibility generally may not be restricted based on an individual's participation in risky activities, confinement to an institution, or absence from work on an individual's enrollment date due to illness. The regulations provide that various plan features including waiting periods and eligibility for certain benefits constitute rules for eligibility which may not vary across similarly situated individuals based on health factors. They also provide that plans may not reclassify employees based on health factors in order to create separate groups of similarly situated individuals among which discrimination would be permitted.

All of these provisions have the effect of clarifying and ensuring certain participants' right to freedom from discrimination in eligibility and premium amounts, thereby securing their access to affordable group health plan coverage. The costs and benefits attributable to these provisions resemble those attendant to HIPAA's statutory nondiscrimination provisions. Securing participants' access to affordable group coverage provides economic benefits by reducing the numbers of uninsured and thereby improving health outcomes. The regulations entail a shifting of costs from the employees whose rights are secured (and/or from other parties who would otherwise pay for their health care) to plan sponsors (or to other plan participants if sponsors pass those costs back to them).

The Departments lack any basis on which to distinguish these benefits and costs from those of the statute itself. It is unclear how many plans were engaging in the discriminatory practices targeted for prohibition by these regulatory provisions. Because these provisions operate largely at the margin of the statutory requirements, it is likely that the effects of these provisions were far smaller than the similar statutory effects. The Departments are confident, however, that by securing employees' access to affordable coverage at the margin, the regulations, like the statute, have yielded benefits that justify costs.

Clarifying Requirements

Additional economic benefits derive directly from the improved clarity provided by the regulations. The regulation provides clarity through both its provisions and its examples of how those provisions apply in various circumstances. By clarifying employees' rights and plan sponsors' obligations under HIPAA's nondiscrimination provisions, the regulations reduce uncertainty and costly disputes over these rights and obligations. Greater clarity promotes employers' and employees' common understanding of the value of group health plan benefits and confidence in the security and predictability of those benefits, thereby improving labor market efficiency and fostering the establishment and

[11] The voluntary nature of the employment-based health benefit system in conjunction with the open and dynamic character of labor markets make explicit as well as implicit negotiations on compensation a key determinant of the prevalence of employee benefits coverage. It is likely that 80% to 100% of the cost of employee benefits is borne by workers through reduced wages (see for example Jonathan Gruber and Alan B. Krueger, ''The Incidence of Mandated Employer-Provided Insurance: Lessons from Workers Compensation Insurance,'' *Tax Policy and Economy* (1991); Jonathan Gruber, ''The Incidence of Mandated Maternity Benefits,'' *American Economic Review*, Vol. 84 (June 1994), pp. 622–641; Lawrence H. Summers, ''Some Simple Economics of Mandated Benefits,'' *American Economic Review*, Vol. 79, No. 2 (May 1989); Louise Sheiner, ''Health Care Costs, Wages, and Aging,'' Federal Reserve Board of Governors working paper, April 1999; and Edward Montgomery, Kathryn Shaw, and Mary Ellen Benedict, ''Pensions and Wages: An Hedonic Price Theory Approach,'' *International Economic Review,* Vol. 33 No. 1, Feb. 1992.). The prevalence of benefits is therefore largely dependent on the efficacy of this exchange. If workers perceive that there is the potential for inappropriate denial of benefits they will discount their value to adjust for this risk. This discount drives a wedge in the compensation negotiation, limiting its efficiency. With workers unwilling to bear the full cost of the benefit, fewer benefits will be provided. The extent to which workers perceive a federal regulation supported by enforcement authority to improve the security and quality of benefits, the differential between the employers costs and workers willingness top accept wage offsets is minimized.

[12] Research shows that while the share of employers offering insurance is generally stable and eligibility rates have only declined slightly over time, the overall increase in uninsured workers is due to the decline in worker take-up rates, which workers primarily attribute to cost. Research on elasticity of coverage, however, has focused on getting uninsured workers to adopt coverage (which appears to require large subsidies) rather than covered workers opting out of coverage. This makes it difficult to ascertain the loss in coverage that would result from a marginal increase in costs. (See, for example, David M. Cutler ''Employee Costs and the Decline in Health Insurance Coverage'' NBER Working Paper #9036. July 2002; Gruber, Jonathon and Ebonya Washington. ''Subsidies to Employee Health Insurance Premiums and the Health Insurance Market'' NBER Working Paper #9567. March 2003; and Cooper, PF and J. Vistnes. ''Workers' Decisions to Take-up Offered Insurance Coverage: Assessing the Importance of Out-of-Pocket Costs'' Med Care 2003, 41(7 Suppl): III35–43.) Finally, economic discussions on elasticity of insurance tend to view coverage as a discrete concept and does not consider that the value of coverage may have also changed.

[13] Departments' tabulations using the 2005 Kaiser Family Foundation's Employer Health Benefits Annual Survey. Average employee premium is a weighted average of premiums for single, family, and employee-plus-one health plans. The estimate for Employee-Plus-One health premiums was derived using the 2003 MEPS-IC, as was the share of employees in each type of plans. Participants are defined as the workers or primary policy holders.

[14] Departments' tabulations off the February 1997 Current Population Survey (CPS), Contingent Worker Supplement. The estimate was projected to reflect current labor market conditions by assuming the same share of the employed, civilian force would be affected and using the 2004 CPS table, ''Employment status of the civilian noninstitutional population, 1940 to date.''

[15] The Departments' estimate is based on the Office of the Actuary at the Centers for Medicare and Medicaid Services (CMS) projected measure of total personal health expenditures by private health insurance in 2005. This total ($707.0 billion) is then multiplied by the share of privately insured individuals covered by employer-sponsored health insurance in 2004 as estimated by the 2005 March CPS (88 percent).

continuation of group health plans by employers.

Impact of the Final Rules

As noted earlier in this preamble, the Departments have not modified the 2001 interim rules in any way that would impact the original cost estimates or the magnitude of the statutory transfers. Accordingly, no impact is attributable to these final regulations when measured against the baseline of the interim final rules. The provisions of the 2001 interim rules offer the appropriate baseline for this measurement because these rules were generally applicable for plan years beginning on or after July 1, 2001.

4. Costs and Benefits of the Rules Applicable to Wellness Programs

By contrast with the nondiscrimination regulatory provisions issued as interim final rules, the provisions relating to wellness programs were issued as proposed rules. This final regulation will not become effective until its applicability date.

Under the final regulation, health plans generally may vary employee premium contributions or benefit levels across similarly situated individuals based on a health factor only in connection with wellness programs. The final regulation establishes five requirements for wellness programs that vary premiums or benefits based on participation in the program and condition a reward involving premiums or benefits on satisfaction of a standard related to a health factor. These requirements will, therefore, apply to only a subset of all wellness programs.

Available literature, together with comments received by the Departments, demonstrate that well-designed wellness programs can deliver benefits well in excess of their costs. For example, the U.S. Centers for Disease Control and Prevention estimate that implementing proven clinical smoking cessation interventions can save one year of life for each $2,587 invested.[16] In addition to reduced mortality, benefits of effective wellness programs can include reduced absenteeism, improved productivity, and reduced medical costs.[17] The requirements of the final regulation were crafted to accommodate and not impair such beneficial programs, while combating discrimination in eligibility and premiums for similarly situated individuals as intended by Congress.

Estimation of the economic impacts of the requirements is difficult because data on affected plans' current practices are incomplete, and because plans' approaches to compliance with the requirements and the effects of those approaches will vary and cannot be predicted. Nonetheless, the Departments endeavored to consider the impacts fully and to develop estimates based on reasonable assumptions.

The Departments estimate that 1.6 percent of large plans and 1.2 percent of small plans currently vary employee premium contributions across similarly situated individuals due to participation in a wellness program that provides rewards based on satisfaction of a standard related to a health factor.[18] This amounts to 30,000 plans covering 1.1 million participants. According to survey data reported by Hewitt Associates,[19] just less than one-half as many plans vary benefit levels across similarly situated individuals as vary premiums. This amounts to 13,000 plans covering 460,000 participants. The Departments considered the effect of each of the five requirements on these plans. For purposes of its estimates, the Departments assumed that one-half of the plans in the latter group are also included in the former, thereby estimating that 37,000 plans covering 1.3 million participants will be subject to the five requirements for wellness programs.

Limit on Reward

Under the first requirement, any reward, whether applicable to employee premiums or benefit levels, must not exceed 20 percent of the total premium for employee-only coverage under the plan (with additional provisions related to rewards that apply also to classes of dependents). This percentage is the highest of the three alternative percentages suggested in the proposed rule, and the award limit used for purposes of the analysis of the proposed rule, which was 15 percent—the midpoint of the three alternative percentages suggested in the proposal. The estimates here also reflect increases in average annual premiums and the numbers of plans and participants since publication of the proposed rules.

The Departments lack representative data on the magnitude of the rewards applied by affected plans today. One consultant practicing in this area suggested that wellness incentive premium discounts ranged from about 3 percent to 23 percent, with an average of about 11 percent.[20] This suggests that most affected plans, including some whose discounts are somewhat larger than average, already comply with the first requirement and will not need to reduce the size of the rewards they apply. It appears likely, however, that perhaps a few thousand plans covering approximately one hundred thousand participants will need to reduce the size of their rewards in order to comply with the first requirement.

The Departments considered the potential economic effects of requiring these plans to reduce the size of their rewards. These effects are likely to include a shifting of costs between plan sponsors and participants, as well as new economic costs and benefits. Shifts in costs will arise as plans reduce rewards where necessary. Plan sponsors can exercise substantial control over the size and direction of these shifts. Limiting the size of rewards restricts only the differential treatment between participants who satisfy wellness program standards and those who do not. It does not, for example, restrict plans sponsors' flexibility to determine the overall respective employer and employee shares of base premiums. Possible outcomes include a shifting of costs to plan sponsors from participants who satisfy wellness program standards, from plan sponsors to participants who do not satisfy the standards, from participants who satisfy the standards to those who do not, or some combination of these.

[16] Cromwell, J., W. J. Bartosch, M. C. Fiore, V. Hasselblad and T. Baker. ''Cost-Effectiveness of the Clinical Practice Recommendations in the AHCPR Guideline for Smoking Cessation.'' *Journal of the American Medical Association*, vol. 278 (December 3, 1997): 1759–66.

[17] The benefits of employer wellness programs are well documented. One study found the annual per participant savings to be $613 while private companies have reported returns of as much as $4.50 in lowered medical expenses for every dollar spent on health programs. (See for example, Gregg M. State et al, ''Quantifiable Impact of the Contract for Health Wellness: Health Behaviors, Health Care Costs, Disability and Workers' Compensation,'' *Journal of Occupational and Environmental Medicine* (2003), vol. 45 (2):109–117; Morgan O'Rourke & Laura Sullivan, ''A Health Return on Employee Investment'' *Risk Management* (2003), vol. 50 (11): 34–38; American Association of Health Plans and Health Insurance Association of America ''The Cost Savings of Disease Management Programs: Report on a Study of Health Plans,'' November, 2003; Rachel Christensen, ''Employment-Based Health Promotion and Wellness Programs'' EBRI Notes (2001), vol. 22 (7): 1–6; and Steven G. Aldana ''Financial Impact of Wellness Programs: A Comprehensive Review of the Literature,'' *American Journal of Health Promotions* (2001), vol. 15 (5): 296–320.)

[18] Estimates are based on a 1993 survey of employers by the Robert Wood Johnson Foundation. More recent estimates are unavailable.

[19] Hewitt Associates, July 2003.

[20] This estimate was made in 1998, shortly after the 1997 interim final rule was published. Since then, it appears that wellness programs advocates have been advising health plans to offer premium discounts in the range of 5 to 11 percent, well below the proposed ceiling. For a full discussion, see Larry Chapman's, ''Increasing Participation in Wellness Programs,'' *National Wellness Institute Members ''Ask the Expert,''* July/August 2004.

The Departments developed a very rough estimate of the total amount of costs that might derive from this requirement. The Departments' estimate assumes that (1) all rewards take the form of employee premium discounts; (2) discounts are distributed evenly within both the low-to-average range and the average-to-high range, and are distributed across these ranges such that their mean equals the assumed average; and (3) 70 percent of participants qualify for the discount. The 4,000 affected plans could satisfy this requirement by reducing the premium discount for the 100,000 participants who successfully complete a certified wellness program. When applied to the 2005 average annual employee-only premium of $4,024,[21] discounts range from $115 to $920, with an average of $460. The maximum allowable discount based on 20 percent of current premium is $805. Reducing all discounts greater than $805 to that amount will result in an average annual reduction of about $57. Applying this reduction to the 100,000 participants assumed to be covered by 4,000 plans affected by the limit results in an estimate of the aggregate cost at $6 million.

New economic costs and benefits may arise if changes in the size of rewards result in changes in participant behavior. Net economic welfare might be lost if some wellness programs' effectiveness is eroded, but the magnitude and incidence of such effects is expected to be negligible. Consider a wellness program that discounts premiums for participants who take part in an exercise program. It is plausible that, at the margin, a few participants who would take part in order to obtain an existing discount will not take part to obtain a somewhat lower discount. This effect is expected to be negligible, however. Reductions in discounts are likely to average about $57 annually, which is very small when spread over biweekly pay periods. Moreover, the final regulation limits only rewards applied to similarly situated individuals in the context of a group health plan. It does not restrict plan sponsors from encouraging healthy lifestyles in other ways, such as by varying life insurance premiums.

On the other hand, net economic welfare likely will be gained in instances where large premium differentials would otherwise have served to discourage enrollment in health plans by employees who did not satisfy wellness program requirements.

The Departments believe that the net economic gains from prohibiting rewards so large that they could discourage enrollment based on health factors justify any net losses that might derive from the negligible reduction of some employees' incentive to participate in wellness programs.

Reasonable Design

Under the second requirement, the program must be reasonably designed to promote health or prevent disease. The Departments believe that a program that is not so designed would not provide economic benefits, but would serve merely to shift costs from plan sponsors to targeted individuals based on health factors. Comments received by the Departments and available literature on employee wellness programs, however, suggest that existing wellness programs generally satisfy this requirement. As was stated in the analysis of the proposed rule, this requirement therefore is not expected to compel plans to modify existing wellness programs or entail additional economic costs.

Annual Opportunity To Qualify

Although this requirement was included in the proposal within the requirement for reasonable design, it has been reorganized as a separate provision in these final regulations. At the time of the proposal, the Departments assumed that most plans satisfied the requirements for reasonable design, such that they would not be required to modify existing programs. Accordingly, no cost was attributed to the reasonable design requirements when taken together. The Departments did request comments on this assumption, but received no additional information in response. Accordingly, the Departments have not attributed a cost to this provision of the final regulations.

Uniform Availability

The fourth requirement provides that where rewards are conditioned on satisfaction of a standard related to a health factor, rewards must be available to all similarly situated individuals. A reward is not available to all similarly situated individuals unless the program allows for a reasonable alternative standard if the otherwise applicable initial standard is unreasonably difficult to achieve due to a medical condition or medically inadvisable for the individual to meet. In particular, the program must offer any such individual the opportunity to satisfy a reasonable alternative standard. Comments received by the Departments and available literature on employee wellness programs suggest that some wellness programs do not currently satisfy this requirement and will have to be modified. The Departments estimate that among employers that provide incentives for employees to participate in wellness programs, nine percent require employees to achieve a low risk behavior to qualify for the incentive, 53 percent require a pledge of compliance, and 55 percent require participation in a program.[22] Depending on the nature of the wellness program, it might be unreasonably difficult due to a medical condition or medically inadvisable for at least some plan participants to achieve the behavior or to comply with or participate in the program.

The Departments identified three broad types of economic impact that might arise from this requirement. First, affected plans will incur some economic cost to make available reasonable alternative standards. Second, additional economic costs and benefits may arise depending on the nature of alternatives provided, individuals' use of these alternatives, and any changes in the affected individuals' behavioral and health outcomes. Third, some costs may be shifted from individuals who would fail to satisfy programs' initial standards, but who will satisfy reasonable alternative standards once available (and thereby qualify for associated rewards), to plan sponsors (or to other participants in their plans if plan sponsors elect to pass these costs back to all participants).

The Departments note that some plans that offer rewards to similarly situated individuals based on their ability to meet a standard related to a health factor (and are therefore subject to the requirement) may not need to provide alternative standards. The requirement provides that alternative standards need not be specified or provided until a participant for whom it is unreasonably difficult due to a medical condition or medically inadvisable to satisfy the initial standard seeks such an alternative. Some wellness programs' initial standards may be such that no participant would ever find them unreasonably difficult to satisfy due to a medical condition or medically inadvisable to attempt. The Departments estimate that 3,000 potentially affected plans have initial wellness program standards that might be unreasonably difficult for some participants to satisfy due to a medical condition or medically

[21] Average based on the Kaiser Family Foundation/Health Research and Education Trust *Survey of Employer-Sponsored Health Benefits, 2005*.

[22] Hewitt Associates, July, 2003. The sum of these shares exceeds 100 percent due to some employers using multiple criteria to determine compliance.

inadvisable to attempt.[23] Moreover, because alternatives need not be made available until they are sought by qualified plan participants, it might be possible for some plans to go for years without needing to make available an alternative standard. This could be particularly likely for small plans.[24]

The Departments estimate that as many as 27 percent of participants in plans with rewards that are based on meeting a standard related to a health factor, or 344,000 individuals, might fail to satisfy wellness programs' initial standards because they are unreasonably difficult due to a medical condition or medically inadvisable to meet.[25] Of these, only about 30,000 are in the 3,000 plans assumed to apply standards that might be unreasonably difficult due to a medical condition or medically inadvisable for some plan participants to satisfy. The standards would in fact be unreasonably difficult or medically inadvisable to satisfy for some subset of these individuals—roughly two-thirds, or 19,000 by the Departments' estimate.[26] Of these, it is assumed that between 5,000 and 19,000 of those individuals that seek alternative standards are able to satisfy them.[27]

The cost associated with establishing alternative standards is unknown. However, the regulation does not prescribe a particular type of alternative standard that must be provided. Instead, it permits plan sponsors flexibility to provide any reasonable alternative, or to waive the standard, for individuals for whom the initial standard is unreasonably difficult due to a medical condition or medically inadvisable to meet. The Departments expect that plan sponsors will select alternatives that entail the minimum net costs possible. Plan sponsors may select low-cost alternatives, such as requiring an individual for whom it would be unreasonably difficult to quit smoking (and thereby qualify for a non-smoker discount) to attend a smoking cessation program that is available at little or no cost in the community, or to watch educational videos or review educational literature. Plan sponsors presumably will select higher-cost alternatives only if they thereby derive offsetting benefits, such as a higher smoking cessation success rate.

Although there is considerable uncertainty in these estimates, it seems reasonable to assume that the net cost sponsors will incur in the provision of alternatives, including new economic costs and benefits, will not exceed the cost of providing discounts (or waiving surcharges) for all plan participants who qualify for alternatives, which is estimated at between $2 million and $9 million.[28] Other economic costs and benefits might arise where alternative standards are made available. For example, some individuals might receive a discount for satisfying alternative standards that turn out to be less beneficial to overall health than the initial standard might have been, resulting in a net loss of economic welfare. In other cases, the satisfaction of an alternative standard might produce the desired health improvement, which would represent a net gain in economic welfare.

Although outcomes are uncertain, the Departments note that plan sponsors have strong motivation to identify and provide alternative standards that have positive net economic effects. They will be disinclined to provide alternatives that worsen behavioral and health outcomes, or that make financial rewards available absent meaningful efforts by participants to improve their health habits and health. Instead they will be inclined to provide alternatives that sustain or reinforce plan participants' incentive to improve their health habits and health, and/or that help participants make such improvements. It therefore seems likely that gains in economic welfare from this requirement will equal or justify losses. The Departments anticipate that the requirement to provide reasonable alternative standards will reduce instances where wellness programs serve only to shift costs to higher risk individuals and increase instances where programs succeed at helping individuals with higher health risks improve their health habits and health.

Disclosure Regarding Reasonable Alternative Standards

The fifth requirement provides that plan materials describing wellness program standards that are related to a health factor must disclose the availability of reasonable alternative standards. Under some wellness programs, an individual must satisfy a standard related to a health factor in order to qualify for the reward.

Plans offering wellness programs under which an individual must satisfy a standard related to a health factor in order to qualify for the reward must disclose in all plan materials describing the terms of the program the availability of a reasonable alternative standard. The regulations provide sample language for this disclosure. An actual description of the alternative standard is not required in such materials. In plan materials that merely mention that a wellness program is available but do not describe its terms, this disclosure of the availability of an alternative standard is not required. The Departments generally account elsewhere for plans' cost of updating such materials to reflect changes in plan provisions as required

[23] Estimate is based on both the share of plans in the 2003–04 Hewitt survey stating that certain health factors or lifestyle choices affect employees' benefit coverage and the share of employers requiring employees to achieve a lower-risk behavior to earn incentives. These measures are then combined with the number of workers in the civilian labor force (from 2003 estimates of the Bureau of Labor Statistics (BLS) suffering from these maladies (as provided by the Centers for Disease Control (CDC) 2004 *Health* and the National Center for Statistics and Analysis (NCSA) 2004 estimates of seatbelt use), by demographic group.

[24] The most common standards that would be implemented by this provision of the wellness program rules pertain to smoking, blood pressure, and cholesterol levels, according to the Hewitt survey. Based on data from the CDC, NCSA and BLS, the Departments estimate that among plans with five participants, about one-fourth will not contain any smokers, one-third will not contain participants with high blood pressure and two-fifths will not contain any with high cholesterol. Approximately 97 percent of all plans with potentially difficult initial wellness program standards have fewer than 100 participants.

[25] This estimate is considerably lower than that offered in the proposal due to a difference in the format of the data reported in the 2001 and 2003 Hewitt surveys, and the Departments' original adjustment for data reported in the 2001 survey as, ''not provided.'' The Departments believe in light of the 2003 data that the adjustments thought to be appropriate at the time overestimated the number of plans with standards that might be unreasonably difficult or medically inadvisable to meet, resulting in more instances in which alternative standards might be established and met, and greater magnitudes of transfers for individuals who would newly attain rewards. The Departments have revised their assumptions to account for a smaller number of plans with standards unreasonably difficult or medically inadvisable to meet, and a correspondingly larger number of participants who will already have been satisfying these standards. Accordingly, this results in a reduction of the estimates of transfers in connection with establishing reasonable alternative standards.

[26] Having previously determined the share of the working class population suffering from various maladies using CDC, NCSA and BLS estimates and how, according to the Hewitt survey, these conditions are factored into wellness programs, the Departments were able to estimate that 26.8 percent of plan participants may initially fail to satisfy program standards. Since the Hewitt study went on to state that 9 percent of employers surveyed required participants to meet the standard in order to receive premium discounts, it was then concluded that 2.3 percent may have difficulty meeting the standards and 1.5 percent will have difficulty meeting the standards.

[27] No independent estimates of the those satisfying alternative standards were available, so the Departments created an upper bound which assumes all individuals for whom the standards are unreasonably difficult seek and satisfy an alternative standard, and a lower bound which assumes half of those for whom the standards are unreasonably difficult seek an alternative, and half of those are able to satisfy it.

[28] These estimates are the product of the range of numbers of individuals who might newly attain rewards and the average premium reward. It is likely that many plan sponsors will find more cost-effective ways to satisfy this requirement, and that the true net cost to them will therefore be smaller than this.

under various disclosure requirements and as is part of usual business practice. This particular requirement is expected to represent a negligible fraction of the ongoing cost of updating plans' materials, and is not separately accounted for here.

Statutory Authority

The Department of the Treasury final rule is adopted pursuant to the authority contained in sections 7805 and 9833 of the Code (26 U.S.C. 7805, 9833).

The Department of Labor final rule is adopted pursuant to the authority contained in sections 29 U.S.C. 1027, 1059, 1135, 1161–1168, 1169, 1181–1183, 1181 note, 1185, 1185a, 1185b, 1191, 1191a, 1191b, and 1191c, sec. 101(g), Public Law 104–191, 110 Stat. 1936; sec. 401(b), Public Law 105–200, 112 Stat. 645 (42 U.S.C. 651 note); Secretary of Labor's Order 1–2003, 68 FR 5374 (Feb. 3, 2003).

The Department of Health and Human Services final rule is adopted pursuant to the authority contained in sections 2701 through 2763, 2791, and 2792 of the PHS Act (42 U.S.C. 300gg through 300gg–63, 300gg–91, and 300gg–92), as added by HIPAA (Pub. L. 104–191, 110 Stat. 1936), and amended by the Mental Health Parity Act (MHPA) and the Newborns' and Mothers' Health Protection Act (NMHPA) (Pub. L. 104–204, 110 Stat. 2935), and the Women's Health and Cancer Rights Act (WHCRA) (Pub. L. 105–277, 112 Stat. 2681–436).

List of Subjects

26 CFR Part 54

Excise taxes, Health care, Health insurance, Pensions, Reporting and recordkeeping requirements.

29 CFR Part 2590

Continuation coverage, Disclosure, Employee benefit plans, Group health plans, Health care, Health insurance, Medical child support, Reporting and recordkeeping requirements.

45 CFR Part 146

Health care, Health insurance, Reporting and recordkeeping requirements, and State regulation of health insurance.

Adoption of Amendments to the Regulations

Internal Revenue Service

26 CFR Chapter I

■ Accordingly, 26 CFR Part 54 is amended as follows:

PART 54—PENSION EXCISE TAXES

■ **Paragraph 1.** The authority citation for part 54 is amended by removing the citation for § 54.9802–1T to read, in part, as follows:

Authority: 26 U.S.C. 7805. * * *

§ 54.9802–1T [Removed]

■ **Par. 2.** Section 54.9802–1T is removed.

■ **Par. 3.** Section 54.9802–1 is revised to read as follows:

§ 54.9802–1 Prohibiting discrimination against participants and beneficiaries based on a health factor.

(a) *Health factors.* (1) The term *health factor* means, in relation to an individual, any of the following health status-related factors:

(i) Health status;

(ii) Medical condition (including both physical and mental illnesses), as defined in § 54.9801–2;

(iii) Claims experience;

(iv) Receipt of health care;

(v) Medical history;

(vi) Genetic information, as defined in § 54.9801–2;

(vii) Evidence of insurability; or

(viii) Disability.

(2) Evidence of insurability includes—

(i) Conditions arising out of acts of domestic violence; and

(ii) Participation in activities such as motorcycling, snowmobiling, all-terrain vehicle riding, horseback riding, skiing, and other similar activities.

(3) The decision whether health coverage is elected for an individual (including the time chosen to enroll, such as under special enrollment or late enrollment) is not, itself, within the scope of any health factor. (However, under § 54.9801–6, a plan must treat special enrollees the same as similarly situated individuals who are enrolled when first eligible.)

(b) *Prohibited discrimination in rules for eligibility*—(1) *In general*—(i) A group health plan may not establish any rule for eligibility (including continued eligibility) of any individual to enroll for benefits under the terms of the plan that discriminates based on any health factor that relates to that individual or a dependent of that individual. This rule is subject to the provisions of paragraph (b)(2) of this section (explaining how this rule applies to benefits), paragraph (b)(3) of this section (allowing plans to impose certain preexisting condition exclusions), paragraph (d) of this section (containing rules for establishing groups of similarly situated individuals), paragraph (e) of this section (relating to nonconfinement, actively-at-work, and other service requirements), paragraph (f) of this section (relating to wellness programs), and paragraph (g) of this section (permitting favorable treatment of individuals with adverse health factors).

(ii) For purposes of this section, rules for eligibility include, but are not limited to, rules relating to—

(A) Enrollment;

(B) The effective date of coverage;

(C) Waiting (or affiliation) periods;

(D) Late and special enrollment;

(E) Eligibility for benefit packages (including rules for individuals to change their selection among benefit packages);

(F) Benefits (including rules relating to covered benefits, benefit restrictions, and cost-sharing mechanisms such as coinsurance, copayments, and deductibles), as described in paragraphs (b)(2) and (3) of this section;

(G) Continued eligibility; and

(H) Terminating coverage (including disenrollment) of any individual under the plan.

(iii) The rules of this paragraph (b)(1) are illustrated by the following examples:

Example 1. (i) *Facts.* An employer sponsors a group health plan that is available to all employees who enroll within the first 30 days of their employment. However, employees who do not enroll within the first 30 days cannot enroll later unless they pass a physical examination.

(ii) *Conclusion.* In this *Example 1,* the requirement to pass a physical examination in order to enroll in the plan is a rule for eligibility that discriminates based on one or more health factors and thus violates this paragraph (b)(1).

Example 2. (i) *Facts.* Under an employer's group health plan, employees who enroll during the first 30 days of employment (and during special enrollment periods) may choose between two benefit packages: An indemnity option and an HMO option. However, employees who enroll during late enrollment are permitted to enroll only in the HMO option and only if they provide evidence of good health.

(ii) *Conclusion.* In this *Example 2,* the requirement to provide evidence of good health in order to be eligible for late enrollment in the HMO option is a rule for eligibility that discriminates based on one or more health factors and thus violates this paragraph (b)(1). However, if the plan did not require evidence of good health but limited late enrollees to the HMO option, the plan's rules for eligibility would not discriminate based on any health factor, and thus would not violate this paragraph (b)(1), because the time an individual chooses to enroll is not, itself, within the scope of any health factor.

Example 3. (i) *Facts.* Under an employer's group health plan, all employees generally may enroll within the first 30 days of employment. However, individuals who participate in certain recreational activities, including motorcycling, are excluded from coverage.

(ii) *Conclusion.* In this *Example 3,* excluding from the plan individuals who participate in recreational activities, such as

motorcycling, is a rule for eligibility that discriminates based on one or more health factors and thus violates this paragraph (b)(1).

Example 4. (i) *Facts.* A group health plan applies for a group health policy offered by an issuer. As part of the application, the issuer receives health information about individuals to be covered under the plan. Individual *A* is an employee of the employer maintaining the plan. *A* and *A*'s dependents have a history of high health claims. Based on the information about *A* and *A*'s dependents, the issuer excludes *A* and *A*'s dependents from the group policy it offers to the employer.

(ii) *Conclusion.* See *Example 4* in 29 CFR 2590.702(b)(1) and 45 CFR 146.121(b)(1) for a conclusion that the exclusion by the issuer of *A* and *A*'s dependents from coverage is a rule for eligibility that discriminates based on one or more health factors and violates rules under 29 CFR 2590.702(b)(1) and 45 CFR 146.121(b)(1) similar to the rules under this paragraph (b)(1). (If the employer is a small employer under 45 CFR 144.103 (generally, an employer with 50 or fewer employees), the issuer also may violate 45 CFR 146.150, which requires issuers to offer all the policies they sell in the small group market on a guaranteed available basis to all small employers and to accept every eligible individual in every small employer group.) If the plan provides coverage through this policy and does not provide equivalent coverage for *A* and *A*'s dependents through other means, the plan violates this paragraph (b)(1).

(2) *Application to benefits*—(i) *General rule*—(A) Under this section, a group health plan is not required to provide coverage for any particular benefit to any group of similarly situated individuals.

(B) However, benefits provided under a plan must be uniformly available to all similarly situated individuals (as described in paragraph (d) of this section). Likewise, any restriction on a benefit or benefits must apply uniformly to all similarly situated individuals and must not be directed at individual participants or beneficiaries based on any health factor of the participants or beneficiaries (determined based on all the relevant facts and circumstances). Thus, for example, a plan may limit or exclude benefits in relation to a specific disease or condition, limit or exclude benefits for certain types of treatments or drugs, or limit or exclude benefits based on a determination of whether the benefits are experimental or not medically necessary, but only if the benefit limitation or exclusion applies uniformly to all similarly situated individuals and is not directed at individual participants or beneficiaries based on any health factor of the participants or beneficiaries. In addition, a plan may impose annual, lifetime, or other limits on benefits and may require the satisfaction of a deductible, copayment, coinsurance, or other cost-sharing requirement in order to obtain a benefit if the limit or cost-sharing requirement applies uniformly to all similarly situated individuals and is not directed at individual participants or beneficiaries based on any health factor of the participants or beneficiaries. In the case of a cost-sharing requirement, see also paragraph (b)(2)(ii) of this section, which permits variances in the application of a cost-sharing mechanism made available under a wellness program. (Whether any plan provision or practice with respect to benefits complies with this paragraph (b)(2)(i) does not affect whether the provision or practice is permitted under ERISA, the Americans with Disabilities Act, or any other law, whether State or Federal.)

(C) For purposes of this paragraph (b)(2)(i), a plan amendment applicable to all individuals in one or more groups of similarly situated individuals under the plan and made effective no earlier than the first day of the first plan year after the amendment is adopted is not considered to be directed at any individual participants or beneficiaries.

(D) The rules of this paragraph (b)(2)(i) are illustrated by the following examples:

Example 1. (i) *Facts.* A group health plan applies a $500,000 lifetime limit on all benefits to each participant or beneficiary covered under the plan. The limit is not directed at individual participants or beneficiaries.

(ii) *Conclusion.* In this *Example 1,* the limit does not violate this paragraph (b)(2)(i) because $500,000 of benefits are available uniformly to each participant and beneficiary under the plan and because the limit is applied uniformly to all participants and beneficiaries and is not directed at individual participants or beneficiaries.

Example 2. (i) *Facts.* A group health plan has a $2 million lifetime limit on all benefits (and no other lifetime limits) for participants covered under the plan. Participant *B* files a claim for the treatment of AIDS. At the next corporate board meeting of the plan sponsor, the claim is discussed. Shortly thereafter, the plan is modified to impose a $10,000 lifetime limit on benefits for the treatment of AIDS, effective before the beginning of the next plan year.

(ii) *Conclusion.* The facts of this *Example 2* strongly suggest that the plan modification is directed at *B* based on *B*'s claim. Absent outweighing evidence to the contrary, the plan violates this paragraph (b)(2)(i).

Example 3. (i) A group health plan applies for a group health policy offered by an issuer. Individual *C* is covered under the plan and has an adverse health condition. As part of the application, the issuer receives health information about the individuals to be covered, including information about *C*'s adverse health condition. The policy form offered by the issuer generally provides benefits for the adverse health condition that *C* has, but in this case the issuer offers the plan a policy modified by a rider that excludes benefits for *C* for that condition. The exclusionary rider is made effective the first day of the next plan year.

(ii) *Conclusion.* See *Example 3* in 29 CFR 2590.702(b)(2)(i) and 45 CFR 146.121(b)(2)(i) for a conclusion that the issuer violates rules under 29 CFR 2590.702(b)(2)(i) and 45 CFR 146.121(b)(2)(i) similar to the rules under this paragraph (b)(2)(i) because benefits for *C*'s condition are available to other individuals in the group of similarly situated individuals that includes *C* but are not available to *C*. Thus, the benefits are not uniformly available to all similarly situated individuals. Even though the exclusionary rider is made effective the first day of the next plan year, because the rider does not apply to all similarly situated individuals, the issuer violates the rules under 29 CFR 2590.702(b)(2)(i) and 45 CFR 146.121(b)(2)(i). If the plan provides coverage through this policy and does not provide equivalent coverage for *C* through other means, the plan violates this paragraph (b)(2)(i).

Example 4. (i) *Facts.* A group health plan has a $2,000 lifetime limit for the treatment of temporomandibular joint syndrome (TMJ). The limit is applied uniformly to all similarly situated individuals and is not directed at individual participants or beneficiaries.

(ii) *Conclusion.* In this *Example 4,* the limit does not violate this paragraph (b)(2)(i) because $2,000 of benefits for the treatment of TMJ are available uniformly to all similarly situated individuals and a plan may limit benefits covered in relation to a specific disease or condition if the limit applies uniformly to all similarly situated individuals and is not directed at individual participants or beneficiaries. * * * (This example does not address whether the plan provision is permissible under the Americans with Disabilities Act or any other applicable law.)

Example 5. (i) *Facts.* A group health plan applies a $2 million lifetime limit on all benefits. However, the $2 million lifetime limit is reduced to $10,000 for any participant or beneficiary covered under the plan who has a congenital heart defect.

(ii) *Conclusion.* In this *Example 5,* the lower lifetime limit for participants and beneficiaries with a congenital heart defect violates this paragraph (b)(2)(i) because benefits under the plan are not uniformly available to all similarly situated individuals and the plan's lifetime limit on benefits does not apply uniformly to all similarly situated individuals.

Example 6. (i) *Facts.* A group health plan limits benefits for prescription drugs to those listed on a drug formulary. The limit is applied uniformly to all similarly situated individuals and is not directed at individual participants or beneficiaries.

(ii) *Conclusion.* In this *Example 6,* the exclusion from coverage of drugs not listed on the drug formulary does not violate this paragraph (b)(2)(i) because benefits for prescription drugs listed on the formulary are uniformly available to all similarly situated individuals and because the exclusion of

drugs not listed on the formulary applies uniformly to all similarly situated individuals and is not directed at individual participants or beneficiaries.

Example 7. (i) *Facts.* Under a group health plan, doctor visits are generally subject to a $250 annual deductible and 20 percent coinsurance requirement. However, prenatal doctor visits are not subject to any deductible or coinsurance requirement. These rules are applied uniformly to all similarly situated individuals and are not directed at individual participants or beneficiaries.

(ii) *Conclusion.* In this *Example 7,* imposing different deductible and coinsurance requirements for prenatal doctor visits and other visits does not violate this paragraph (b)(2)(i) because a plan may establish different deductibles or coinsurance requirements for different services if the deductible or coinsurance requirement is applied uniformly to all similarly situated individuals and is not directed at individual participants or beneficiaries.

Example 8. (i) *Facts.* An employer sponsors a group health plan that is available to all current employees. Under the plan, the medical care expenses of each employee (and the employee's dependents) are reimbursed up to an annual maximum amount. The maximum reimbursement amount with respect to an employee for a year is $1500 multiplied by the number of years the employee has participated in the plan, reduced by the total reimbursements for prior years.

(ii) *Conclusion.* In this *Example 8,* the variable annual limit does not violate this paragraph (b)(2)(i). Although the maximum reimbursement amount for a year varies among employees within the same group of similarly situated individuals based on prior claims experience, employees who have participated in the plan for the same length of time are eligible for the same total benefit over that length of time (and the restriction on the maximum reimbursement amount is not directed at any individual participants or beneficiaries based on any health factor).

(ii) *Exception for wellness programs.* A group health plan may vary benefits, including cost-sharing mechanisms (such as a deductible, copayment, or coinsurance), based on whether an individual has met the standards of a wellness program that satisfies the requirements of paragraph (f) of this section.

(iii) *Specific rule relating to source-of-injury exclusions*—(A) If a group health plan generally provides benefits for a type of injury, the plan may not deny benefits otherwise provided for treatment of the injury if the injury results from an act of domestic violence or a medical condition (including both physical and mental health conditions). This rule applies in the case of an injury resulting from a medical condition even if the condition is not diagnosed before the injury.

(B) The rules of this paragraph (b)(2)(iii) are illustrated by the following examples:

Example 1. (i) *Facts.* A group health plan generally provides medical/surgical benefits, including benefits for hospital stays, that are medically necessary. However, the plan excludes benefits for self-inflicted injuries or injuries sustained in connection with attempted suicide. Because of depression, Individual *D* attempts suicide. As a result, *D* sustains injuries and is hospitalized for treatment of the injuries. Under the exclusion, the plan denies *D* benefits for treatment of the injuries.

(ii) *Conclusion.* In this *Example 1,* the suicide attempt is the result of a medical condition (depression). Accordingly, the denial of benefits for the treatments of D's injuries violates the requirements of this paragraph (b)(2)(iii) because the plan provision excludes benefits for treatment of an injury resulting from a medical condition.

Example 2. (i) *Facts.* A group health plan provides benefits for head injuries generally. The plan also has a general exclusion for any injury sustained while participating in any of a number of recreational activities, including bungee jumping. However, this exclusion does not apply to any injury that results from a medical condition (nor from domestic violence). Participant *E* sustains a head injury while bungee jumping. The injury did not result from a medical condition (nor from domestic violence). Accordingly, the plan denies benefits for *E*'s head injury.

(ii) *Conclusion.* In this *Example 2,* the plan provision that denies benefits based on the source of an injury does not restrict benefits based on an act of domestic violence or any medical condition. Therefore, the provision is permissible under this paragraph (b)(2)(iii) and does not violate this section. (However, if the plan did not allow *E* to enroll in the plan (or applied different rules for eligibility to *E*) because E frequently participates in bungee jumping, the plan would violate paragraph (b)(1) of this section.)

(3) *Relationship to § 54.9801–3.* (i) A preexisting condition exclusion is permitted under this section if it—

(A) Complies with § 54.9801–3;

(B) Applies uniformly to all similarly situated individuals (as described in paragraph (d) of this section); and

(C) Is not directed at individual participants or beneficiaries based on any health factor of the participants or beneficiaries. For purposes of this paragraph (b)(3)(i)(C), a plan amendment relating to a preexisting condition exclusion applicable to all individuals in one or more groups of similarly situated individuals under the plan and made effective no earlier than the first day of the first plan year after the amendment is adopted is not considered to be directed at any individual participants or beneficiaries.

(ii) The rules of this paragraph (b)(3) are illustrated by the following examples:

Example 1. (i) *Facts.* A group health plan imposes a preexisting condition exclusion on all individuals enrolled in the plan. The exclusion applies to conditions for which medical advice, diagnosis, care, or treatment was recommended or received within the six-month period ending on an individual's enrollment date. In addition, the exclusion generally extends for 12 months after an individual's enrollment date, but this 12-month period is offset by the number of days of an individual's creditable coverage in accordance with § 54.9801–3. There is nothing to indicate that the exclusion is directed at individual participants or beneficiaries.

(ii) *Conclusion.* In this *Example 1,* even though the plan's preexisting condition exclusion discriminates against individuals based on one or more health factors, the preexisting condition exclusion does not violate this section because it applies uniformly to all similarly situated individuals, is not directed at individual participants or beneficiaries, and complies with § 54.9801–3 (that is, the requirements relating to the six-month look-back period, the 12-month (or 18-month) maximum exclusion period, and the creditable coverage offset).

Example 2. (i) *Facts.* A group health plan excludes coverage for conditions with respect to which medical advice, diagnosis, care, or treatment was recommended or received within the six-month period ending on an individual's enrollment date. Under the plan, the preexisting condition exclusion generally extends for 12 months, offset by creditable coverage. However, if an individual has no claims in the first six months following enrollment, the remainder of the exclusion period is waived.

(ii) *Conclusion.* In this *Example 2,* the plan's preexisting condition exclusions violate this section because they do not meet the requirements of this paragraph (b)(3); specifically, they do not apply uniformly to all similarly situated individuals. The plan provisions do not apply uniformly to all similarly situated individuals because individuals who have medical claims during the first six months following enrollment are not treated the same as similarly situated individuals with no claims during that period. (Under paragraph (d) of this section, the groups cannot be treated as two separate groups of similarly situated individuals because the distinction is based on a health factor.)

(c) *Prohibited discrimination in premiums or contributions*—(1) *In general*—(i) A group health plan may not require an individual, as a condition of enrollment or continued enrollment under the plan, to pay a premium or contribution that is greater than the premium or contribution for a similarly situated individual (described in paragraph (d) of this section) enrolled in the plan based on any health factor that relates to the individual or a dependent of the individual.

(ii) Discounts, rebates, payments in kind, and any other premium differential mechanisms are taken into account in determining an individual's premium or contribution rate. (For rules relating to cost-sharing mechanisms, see

paragraph (b)(2) of this section (addressing benefits).)

(2) *Rules relating to premium rates*—(i) *Group rating based on health factors not restricted under this section.* Nothing in this section restricts the aggregate amount that an employer may be charged for coverage under a group health plan.

(ii) *List billing based on a health factor prohibited.* However, a group health plan may not quote or charge an employer (or an individual) a different premium for an individual in a group of similarly situated individuals based on a health factor. (But see paragraph (g) of this section permitting favorable treatment of individuals with adverse health factors.)

(iii) *Examples.* The rules of this paragraph (c)(2) are illustrated by the following examples:

Example 1. (i) *Facts.* An employer sponsors a group health plan and purchases coverage from a health insurance issuer. In order to determine the premium rate for the upcoming plan year, the issuer reviews the claims experience of individuals covered under the plan. The issuer finds that Individual *F* had significantly higher claims experience than similarly situated individuals in the plan. The issuer quotes the plan a higher per-participant rate because of *F*'s claims experience.

(ii) *Conclusion.* See *Example 1* in 29 CFR 2590.702(c)(2) and 45 CFR 146.121(c)(2) for a conclusion that the issuer does not violate the provisions of 29 CFR 2590.702(c)(2) and 45 CFR 146.121(c)(2) similar to the provisions of this paragraph (c)(2) because the issuer blends the rate so that the employer is not quoted a higher rate for *F* than for a similarly situated individual based on *F*'s claims experience.

Example 2. (i) *Facts.* Same facts as *Example 1,* except that the issuer quotes the employer a higher premium rate for *F*, because of *F*'s claims experience, than for a similarly situated individual.

(ii) *Conclusion.* See *Example 2* in 29 CFR 2590.702(c)(2) and 45 CFR 146.121(c)(2) for a conclusion that the issuer violates provisions of 29 CFR 2590.702(c)(2) and 45 CFR 146.121(c)(2) similar to the provisions of this paragraph (c)(2). Moreover, even if the plan purchased the policy based on the quote but did not require a higher participant contribution for *F* than for a similarly situated individual, see *Example 2* in 29 CFR 2590.702(c)(2) and 45 CFR 146.121(c)(2) for a conclusion that the issuer would still violate 29 CFR 2590.702(c)(2) and 45 CFR 146.121(c)(2) (but in such a case the plan would not violate this paragraph (c)(2)).

(3) *Exception for wellness programs.* Notwithstanding paragraphs (c)(1) and (2) of this section, a plan may vary the amount of premium or contribution it requires similarly situated individuals to pay based on whether an individual has met the standards of a wellness program that satisfies the requirements of paragraph (f) of this section.

(d) *Similarly situated individuals.* The requirements of this section apply only within a group of individuals who are treated as similarly situated individuals. A plan may treat participants as a group of similarly situated individuals separate from beneficiaries. In addition, participants may be treated as two or more distinct groups of similarly situated individuals and beneficiaries may be treated as two or more distinct groups of similarly situated individuals in accordance with the rules of this paragraph (d). Moreover, if individuals have a choice of two or more benefit packages, individuals choosing one benefit package may be treated as one or more groups of similarly situated individuals distinct from individuals choosing another benefit package.

(1) *Participants.* Subject to paragraph (d)(3) of this section, a plan may treat participants as two or more distinct groups of similarly situated individuals if the distinction between or among the groups of participants is based on a bona fide employment-based classification consistent with the employer's usual business practice. Whether an employment-based classification is bona fide is determined on the basis of all the relevant facts and circumstances. Relevant facts and circumstances include whether the employer uses the classification for purposes independent of qualification for health coverage (for example, determining eligibility for other employee benefits or determining other terms of employment). Subject to paragraph (d)(3) of this section, examples of classifications that, based on all the relevant facts and circumstances, may be bona fide include full-time versus part-time status, different geographic location, membership in a collective bargaining unit, date of hire, length of service, current employee versus former employee status, and different occupations. However, a classification based on any health factor is not a bona fide employment-based classification, unless the requirements of paragraph (g) of this section are satisfied (permitting favorable treatment of individuals with adverse health factors).

(2) *Beneficiaries*—(i) Subject to paragraph (d)(3) of this section, a plan may treat beneficiaries as two or more distinct groups of similarly situated individuals if the distinction between or among the groups of beneficiaries is based on any of the following factors:

(A) A bona fide employment-based classification of the participant through whom the beneficiary is receiving coverage;

(B) Relationship to the participant (for example, as a spouse or as a dependent child);

(C) Marital status;

(D) With respect to children of a participant, age or student status; or

(E) Any other factor if the factor is not a health factor.

(ii) Paragraph (d)(2)(i) of this section does not prevent more favorable treatment of individuals with adverse health factors in accordance with paragraph (g) of this section.

(3) *Discrimination directed at individuals.* Notwithstanding paragraphs (d)(1) and (2) of this section, if the creation or modification of an employment or coverage classification is directed at individual participants or beneficiaries based on any health factor of the participants or beneficiaries, the classification is not permitted under this paragraph (d), unless it is permitted under paragraph (g) of this section (permitting favorable treatment of individuals with adverse health factors). Thus, if an employer modified an employment-based classification to single out, based on a health factor, individual participants and beneficiaries and deny them health coverage, the new classification would not be permitted under this section.

(4) *Examples.* The rules of this paragraph (d) are illustrated by the following examples:

Example 1. (i) *Facts.* An employer sponsors a group health plan for full-time employees only. Under the plan (consistent with the employer's usual business practice), employees who normally work at least 30 hours per week are considered to be working full-time. Other employees are considered to be working part-time. There is no evidence to suggest that the classification is directed at individual participants or beneficiaries.

(ii) *Conclusion.* In this *Example 1,* treating the full-time and part-time employees as two separate groups of similarly situated individuals is permitted under this paragraph (d) because the classification is bona fide and is not directed at individual participants or beneficiaries.

Example 2. (i) *Facts.* Under a group health plan, coverage is made available to employees, their spouses, and their dependent children. However, coverage is made available to a dependent child only if the dependent child is under age 19 (or under age 25 if the child is continuously enrolled full-time in an institution of higher learning (full-time students)). There is no evidence to suggest that these classifications are directed at individual participants or beneficiaries.

(ii) *Conclusion.* In this *Example 2,* treating spouses and dependent children differently by imposing an age limitation on dependent children, but not on spouses, is permitted under this paragraph (d). Specifically, the distinction between spouses and dependent children is permitted under paragraph (d)(2)

of this section and is not prohibited under paragraph (d)(3) of this section because it is not directed at individual participants or beneficiaries. It is also permissible to treat dependent children who are under age 19 (or full-time students under age 25) as a group of similarly situated individuals separate from those who are age 25 or older (or age 19 or older if they are not full-time students) because the classification is permitted under paragraph (d)(2) of this section and is not directed at individual participants or beneficiaries.

Example 3. (i) *Facts.* A university sponsors a group health plan that provides one health benefit package to faculty and another health benefit package to other staff. Faculty and staff are treated differently with respect to other employee benefits such as retirement benefits and leaves of absence. There is no evidence to suggest that the distinction is directed at individual participants or beneficiaries.

(ii) *Conclusion.* In this *Example 3,* the classification is permitted under this paragraph (d) because there is a distinction based on a bona fide employment-based classification consistent with the employer's usual business practice and the distinction is not directed at individual participants and beneficiaries.

Example 4. (i) *Facts.* An employer sponsors a group health plan that is available to all current employees. Former employees may also be eligible, but only if they complete a specified number of years of service, are enrolled under the plan at the time of termination of employment, and are continuously enrolled from that date. There is no evidence to suggest that these distinctions are directed at individual participants or beneficiaries.

(ii) *Conclusion.* In this *Example 4,* imposing additional eligibility requirements on former employees is permitted because a classification that distinguishes between current and former employees is a bona fide employment-based classification that is permitted under this paragraph (d), provided that it is not directed at individual participants or beneficiaries. In addition, it is permissible to distinguish between former employees who satisfy the service requirement and those who do not, provided that the distinction is not directed at individual participants or beneficiaries. (However, former employees who do not satisfy the eligibility criteria may, nonetheless, be eligible for continued coverage pursuant to a COBRA continuation provision or similar State law.)

Example 5. (i) *Facts.* An employer sponsors a group health plan that provides the same benefit package to all seven employees of the employer. Six of the seven employees have the same job title and responsibilities, but Employee *G* has a different job title and different responsibilities. After *G* files an expensive claim for benefits under the plan, coverage under the plan is modified so that employees with *G*'s job title receive a different benefit package that includes a lower lifetime dollar limit than in the benefit package made available to the other six employees.

(ii) *Conclusion.* Under the facts of this *Example 5,* changing the coverage classification for *G* based on the existing employment classification for *G* is not permitted under this paragraph (d) because the creation of the new coverage classification for *G* is directed at *G* based on one or more health factors.

(e) *Nonconfinement and actively-at-work provisions*—(1) *Nonconfinement provisions*—(i) *General rule.* Under the rules of paragraphs (b) and (c) of this section, a plan may not establish a rule for eligibility (as described in paragraph (b)(1)(ii) of this section) or set any individual's premium or contribution rate based on whether an individual is confined to a hospital or other health care institution. In addition, under the rules of paragraphs (b) and (c) of this section, a plan may not establish a rule for eligibility or set any individual's premium or contribution rate based on an individual's ability to engage in normal life activities, except to the extent permitted under paragraphs (e)(2)(ii) and (3) of this section (permitting plans, under certain circumstances, to distinguish among employees based on the performance of services).

(ii) *Examples.* The rules of this paragraph (e)(1) are illustrated by the following examples:

Example 1. (i) *Facts.* Under a group health plan, coverage for employees and their dependents generally becomes effective on the first day of employment. However, coverage for a dependent who is confined to a hospital or other health care institution does not become effective until the confinement ends.

(ii) *Conclusion.* In this *Example 1,* the plan violates this paragraph (e)(1) because the plan delays the effective date of coverage for dependents based on confinement to a hospital or other health care institution.

Example 2. (i) *Facts.* In previous years, a group health plan has provided coverage through a group health insurance policy offered by Issuer *M.* However, for the current year, the plan provides coverage through a group health insurance policy offered by Issuer *N.* Under Issuer *N*'s policy, items and services provided in connection with the confinement of a dependent to a hospital or other health care institution are not covered if the confinement is covered under an extension of benefits clause from a previous health insurance issuer.

(ii) *Conclusion.* See *Example 2* in 29 CFR 2590.702(e)(1) and 45 CFR 146.121(e)(1) for a conclusion that Issuer *N* violates provisions of 29 CFR 2590.702(e)(1) and 45 CFR 146.121(e)(1) similar to the provisions of this paragraph (e)(1) because the group health insurance coverage restricts benefits based on whether a dependent is confined to a hospital or other health care institution that is covered under an extension of benefits from a previous issuer. See *Example 2* in 29 CFR 2590.702(e)(1) and 45 CFR 146.121(e)(1) for the additional conclusions that under State law Issuer *M* may also be responsible for providing benefits to such a dependent; and that in a case in which Issuer *N* has an obligation under 29 CFR 2590.702(e)(1) or 45 CFR 146.121(e)(1) to provide benefits and Issuer *M* has an obligation under State law to provide benefits, any State laws designed to prevent more than 100% reimbursement, such as State coordination-of-benefits laws, continue to apply.

(2) *Actively-at-work and continuous service provisions*—(i) *General rule*—(A) Under the rules of paragraphs (b) and (c) of this section and subject to the exception for the first day of work described in paragraph (e)(2)(ii) of this section, a plan may not establish a rule for eligibility (as described in paragraph (b)(1)(ii) of this section) or set any individual's premium or contribution rate based on whether an individual is actively at work (including whether an individual is continuously employed), unless absence from work due to any health factor (such as being absent from work on sick leave) is treated, for purposes of the plan, as being actively at work.

(B) The rules of this paragraph (e)(2)(i) are illustrated by the following examples:

Example 1. (i) *Facts.* Under a group health plan, an employee generally becomes eligible to enroll 30 days after the first day of employment. However, if the employee is not actively at work on the first day after the end of the 30-day period, then eligibility for enrollment is delayed until the first day the employee is actively at work.

(ii) *Conclusion.* In this *Example 1,* the plan violates this paragraph (e)(2) (and thus also violates paragraph (b) of this section). However, the plan would not violate paragraph (e)(2) or (b) of this section if, under the plan, an absence due to any health factor is considered being actively at work.

Example 2. (i) *Facts.* Under a group health plan, coverage for an employee becomes effective after 90 days of continuous service; that is, if an employee is absent from work (for any reason) before completing 90 days of service, the beginning of the 90-day period is measured from the day the employee returns to work (without any credit for service before the absence).

(ii) *Conclusion.* In this *Example 2,* the plan violates this paragraph (e)(2) (and thus also paragraph (b) of this section) because the 90-day continuous service requirement is a rule for eligibility based on whether an individual is actively at work. However, the plan would not violate this paragraph (e)(2) or paragraph (b) of this section if, under the plan, an absence due to any health factor is not considered an absence for purposes of measuring 90 days of continuous service.

(ii) *Exception for the first day of work*—(A) Notwithstanding the general rule in paragraph (e)(2)(i) of this section, a plan may establish a rule for eligibility that requires an individual to begin work for the employer sponsoring the plan (or, in the case of a multiemployer

plan, to begin a job in covered employment) before coverage becomes effective, provided that such a rule for eligibility applies regardless of the reason for the absence.

(B) The rules of this paragraph (e)(2)(ii) are illustrated by the following examples:

Example 1. (i) *Facts.* Under the eligibility provision of a group health plan, coverage for new employees becomes effective on the first day that the employee reports to work. Individual *H* is scheduled to begin work on August 3. However, *H* is unable to begin work on that day because of illness. *H* begins working on August 4, and *H*'s coverage is effective on August 4.

(ii) *Conclusion.* In this *Example 1,* the plan provision does not violate this section. However, if coverage for individuals who do not report to work on the first day they were scheduled to work for a reason unrelated to a health factor (such as vacation or bereavement) becomes effective on the first day they were scheduled to work, then the plan would violate this section.

Example 2. (i) *Facts.* Under a group health plan, coverage for new employees becomes effective on the first day of the month following the employee's first day of work, regardless of whether the employee is actively at work on the first day of the month. Individual *J* is scheduled to begin work on March 24. However, *J* is unable to begin work on March 24 because of illness. *J* begins working on April 7 and *J*'s coverage is effective May 1.

(ii) *Conclusion.* In this *Example 2,* the plan provision does not violate this section. However, as in *Example 1,* if coverage for individuals absent from work for reasons unrelated to a health factor became effective despite their absence, then the plan would violate this section.

(3) *Relationship to plan provisions defining similarly situated individuals*—(i) Notwithstanding the rules of paragraphs (e)(1) and (2) of this section, a plan may establish rules for eligibility or set any individual's premium or contribution rate in accordance with the rules relating to similarly situated individuals in paragraph (d) of this section. Accordingly, a plan may distinguish in rules for eligibility under the plan between full-time and part-time employees, between permanent and temporary or seasonal employees, between current and former employees, and between employees currently performing services and employees no longer performing services for the employer, subject to paragraph (d) of this section. However, other Federal or State laws (including the COBRA continuation provisions and the Family and Medical Leave Act of 1993) may require an employee or the employee's dependents to be offered coverage and set limits on the premium or contribution rate even though the employee is not performing services.

(ii) The rules of this paragraph (e)(3) are illustrated by the following examples:

Example 1. (i) *Facts.* Under a group health plan, employees are eligible for coverage if they perform services for the employer for 30 or more hours per week or if they are on paid leave (such as vacation, sick, or bereavement leave). Employees on unpaid leave are treated as a separate group of similarly situated individuals in accordance with the rules of paragraph (d) of this section.

(ii) *Conclusion.* In this *Example 1,* the plan provisions do not violate this section. However, if the plan treated individuals performing services for the employer for 30 or more hours per week, individuals on vacation leave, and individuals on bereavement leave as a group of similarly situated individuals separate from individuals on sick leave, the plan would violate this paragraph (e) (and thus also would violate paragraph (b) of this section) because groups of similarly situated individuals cannot be established based on a health factor (including the taking of sick leave) under paragraph (d) of this section.

Example 2. (i) *Facts.* To be eligible for coverage under a bona fide collectively bargained group health plan in the current calendar quarter, the plan requires an individual to have worked 250 hours in covered employment during the three-month period that ends one month before the beginning of the current calendar quarter. The distinction between employees working at least 250 hours and those working less than 250 hours in the earlier three-month period is not directed at individual participants or beneficiaries based on any health factor of the participants or beneficiaries.

(ii) *Conclusion.* In this *Example 2,* the plan provision does not violate this section because, under the rules for similarly situated individuals allowing full-time employees to be treated differently than part-time employees, employees who work at least 250 hours in a three-month period can be treated differently than employees who fail to work 250 hours in that period. The result would be the same if the plan permitted individuals to apply excess hours from previous periods to satisfy the requirement for the current quarter.

Example 3. (i) *Facts.* Under a group health plan, coverage of an employee is terminated when the individual's employment is terminated, in accordance with the rules of paragraph (d) of this section. Employee *B* has been covered under the plan. *B* experiences a disabling illness that prevents *B* from working. *B* takes a leave of absence under the Family and Medical Leave Act of 1993. At the end of such leave, *B* terminates employment and consequently loses coverage under the plan. (This termination of coverage is without regard to whatever rights the employee (or members of the employee's family) may have for COBRA continuation coverage.)

(ii) *Conclusion.* In this *Example 3,* the plan provision terminating *B*'s coverage upon *B*'s termination of employment does not violate this section.

Example 4. (i) *Facts.* Under a group health plan, coverage of an employee is terminated when the employee ceases to perform services for the employer sponsoring the plan, in accordance with the rules of paragraph (d) of this section. Employee *C* is laid off for three months. When the layoff begins, *C*'s coverage under the plan is terminated. (This termination of coverage is without regard to whatever rights the employee (or members of the employee's family) may have for COBRA continuation coverage.)

(ii) *Conclusion.* In this *Example 4,* the plan provision terminating *C*'s coverage upon the cessation of *C*'s performance of services does not violate this section.

(f) *Wellness programs.* A wellness program is any program designed to promote health or prevent disease. Paragraphs (b)(2)(ii) and (c)(3) of this section provide exceptions to the general prohibitions against discrimination based on a health factor for plan provisions that vary benefits (including cost-sharing mechanisms) or the premium or contribution for similarly situated individuals in connection with a wellness program that satisfies the requirements of this paragraph (f). If none of the conditions for obtaining a reward under a wellness program is based on an individual satisfying a standard that is related to a health factor, paragraph (f)(1) of this section clarifies that the wellness program does not violate this section if participation in the program is made available to all similarly situated individuals. If any of the conditions for obtaining a reward under a wellness program is based on an individual satisfying a standard that is related to a health factor, the wellness program does not violate this section if the requirements of paragraph (f)(2) of this section are met.

(1) *Wellness programs not subject to requirements.* If none of the conditions for obtaining a reward under a wellness program is based on an individual satisfying a standard that are related to a health factor (or if a wellness program does not provide a reward), the wellness program does not violate this section, if participation in the program is made available to all similarly situated individuals. Thus, for example, the following programs need not satisfy the requirements of paragraph (f)(2) of this section, if participation in the program is made available to all similarly situated individuals:

(i) A program that reimburses all or part of the cost for memberships in a fitness center.

(ii) A diagnostic testing program that provides a reward for participation and does not base any part of the reward on outcomes.

(iii) A program that encourages preventive care through the waiver of the copayment or deductible requirement under a group health plan for the costs of, for example, prenatal care or well-baby visits.

(iv) A program that reimburses employees for the costs of smoking cessation programs without regard to whether the employee quits smoking.

(v) A program that provides a reward to employees for attending a monthly health education seminar.

(2) *Wellness programs subject to requirements.* If any of the conditions for obtaining a reward under a wellness program is based on an individual satisfying a standard that is related to a health factor, the wellness program does not violate this section if the requirements of this paragraph (f)(2) are met.

(i) The reward for the wellness program, coupled with the reward for other wellness programs with respect to the plan that require satisfaction of a standard related to a health factor, must not exceed 20 percent of the cost of employee-only coverage under the plan. However, if, in addition to employees, any class of dependents (such as spouses or spouses and dependent children) may participate in the wellness program, the reward must not exceed 20 percent of the cost of the coverage in which an employee and any dependents are enrolled. For purposes of this paragraph (f)(2), the cost of coverage is determined based on the total amount of employer and employee contributions for the benefit package under which the employee is (or the employee and any dependents are) receiving coverage. A reward can be in the form of a discount or rebate of a premium or contribution, a waiver of all or part of a cost-sharing mechanism (such as deductibles, copayments, or coinsurance), the absence of a surcharge, or the value of a benefit that would otherwise not be provided under the plan.

(ii) The program must be reasonably designed to promote health or prevent disease. A program satisfies this standard if it has a reasonable chance of improving the health of or preventing disease in participating individuals and it is not overly burdensome, is not a subterfuge for discriminating based on a health factor, and is not highly suspect in the method chosen to promote health or prevent disease.

(iii) The program must give individuals eligible for the program the opportunity to qualify for the reward under the program at least once per year.

(iv) The reward under the program must be available to all similarly situated individuals.

(A) A reward is not available to all similarly situated individuals for a period unless the program allows—

(1) A reasonable alternative standard (or waiver of the otherwise applicable standard) for obtaining the reward for any individual for whom, for that period, it is unreasonably difficult due to a medical condition to satisfy the otherwise applicable standard; and

(2) A reasonable alternative standard (or waiver of the otherwise applicable standard) for obtaining the reward for any individual for whom, for that period, it is medically inadvisable to attempt to satisfy the otherwise applicable standard.

(B) A plan or issuer may seek verification, such as a statement from an individual's physician, that a health factor makes it unreasonably difficult or medically inadvisable for the individual to satisfy or attempt to satisfy the otherwise applicable standard.

(v)(A) The plan must disclose in all plan materials describing the terms of the program the availability of a reasonable alternative standard (or the possibility of waiver of the otherwise applicable standard) required under paragraph (f)(2)(iv) of this section. However, if plan materials merely mention that a program is available, without describing its terms, this disclosure is not required.

(B) The following language, or substantially similar language, can be used to satisfy the requirement of this paragraph (f)(2)(v): ''If it is unreasonably difficult due to a medical condition for you to achieve the standards for the reward under this program, or if it is medically inadvisable for you to attempt to achieve the standards for the reward under this program, call us at [insert telephone number] and we will work with you to develop another way to qualify for the reward.'' In addition, other examples of language that would satisfy this requirement are set forth in *Examples 3*, *4*, and *5* of paragraph (f)(3) of this section.

(3) *Examples.* The rules of paragraph (f)(2) of this section are illustrated by the following examples:

Example 1. (i) *Facts.* An employer sponsors a group health plan. The annual premium for employee-only coverage is $3,600 (of which the employer pays $2,700 per year and the employee pays $900 per year). The annual premium for family coverage is $9,000 (of which the employer pays $4,500 per year and the employee pays $4,500 per year). The plan offers a wellness program with an annual premium rebate of $360. The program is available only to employees.

(ii) *Conclusion.* In this *Example 1*, the program satisfies the requirements of paragraph (f)(2)(i) of this section because the reward for the wellness program, $360, does not exceed 20 percent of the total annual cost of employee-only coverage, $720. ($3,600 × 20% = $720.) If any class of dependents is allowed to participate in the program and the employee is enrolled in family coverage, the plan could offer the employee a reward of up to 20 percent of the cost of family coverage, $1,800. ($9,000 × 20% = $1,800.)

Example 2. (i) *Facts.* A group health plan gives an annual premium discount of 20 percent of the cost of employee-only coverage to participants who adhere to a wellness program. The wellness program consists solely of giving an annual cholesterol test to participants. Those participants who achieve a count under 200 receive the premium discount for the year.

(ii) *Conclusion.* In this *Example 2*, the program fails to satisfy the requirement of being available to all similarly situated individuals because some participants may be unable to achieve a cholesterol count of under 200 and the plan does not make available a reasonable alternative standard or waive the cholesterol standard. (In addition, plan materials describing the program are required to disclose the availability of a reasonable alternative standard (or the possibility of waiver of the otherwise applicable standard) for obtaining the premium discount. Thus, the premium discount violates paragraph (c) of this section because it may require an individual to pay a higher premium based on a health factor of the individual than is required of a similarly situated individual under the plan.

Example 3. (i) *Facts.* Same facts as *Example 2,* except that the plan provides that if it is unreasonably difficult due to a medical condition for a participant to achieve the targeted cholesterol count (or if it is medically inadvisable for a participant to attempt to achieve the targeted cholesterol count) within a 60-day period, the plan will make available a reasonable alternative standard that takes the relevant medical condition into account. In addition, all plan materials describing the terms of the program include the following statement: ''If it is unreasonably difficult due to a medical condition for you to achieve a cholesterol count under 200, or if it is medically inadvisable for you to attempt to achieve a count under 200, call us at the number below and we will work with you to develop another way to get the discount.'' Individual *D* begins a diet and exercise program but is unable to achieve a cholesterol count under 200 within the prescribed period. *D*'s doctor determines *D* requires prescription medication to achieve a medically advisable cholesterol count. In addition, the doctor determines that *D* must be monitored through periodic blood tests to continually reevaluate *D*'s health status. The plan accommodates *D* by making the discount available to *D*, but only if *D* follows the advice of *D*'s doctor's regarding medication and blood tests.

(ii) *Conclusion.* In this *Example 3*, the program is a wellness program because it satisfies the five requirements of paragraph (f)(2) of this section. First, the program

complies with the limits on rewards under a program. Second, it is reasonably designed to promote health or prevent disease. Third, individuals eligible for the program are given the opportunity to qualify for the reward at least once per year. Fourth, the reward under the program is available to all similarly situated individuals because it accommodates individuals for whom it is unreasonably difficult due to a medical condition to achieve the targeted count (or for whom it is medically inadvisable to attempt to achieve the targeted count) in the prescribed period by providing a reasonable alternative standard. Fifth, the plan discloses in all materials describing the terms of the program the availability of a reasonable alternative standard. Thus, the premium discount does not violate this section.

Example 4. (i) *Facts.* A group health plan will waive the $250 annual deductible (which is less than 20 percent of the annual cost of employee-only coverage under the plan) for the following year for participants who have a body mass index between 19 and 26, determined shortly before the beginning of the year. However, any participant for whom it is unreasonably difficult due to a medical condition to attain this standard (and any participant for whom it is medically inadvisable to attempt to achieve this standard) during the plan year is given the same discount if the participant walks for 20 minutes three days a week. Any participant for whom it is unreasonably difficult due to a medical condition to attain either standard (and any participant for whom it is medically inadvisable to attempt to achieve either standard) during the year is given the same discount if the individual satisfies an alternative standard that is reasonable in the burden it imposes and is reasonable taking into consideration the individual's medical situation. All plan materials describing the terms of the wellness program include the following statement: ''If it is unreasonably difficult due to a medical condition for you to achieve a body mass index between 19 and 26 (or if it is medically inadvisable for you to attempt to achieve this body mass index) this year, your deductible will be waived if you walk for 20 minutes three days a week. If you cannot follow the walking program, call us at the number above and we will work with you to develop another way to have your deductible waived.'' Due to a medical condition, Individual *E* is unable to achieve a BMI of between 19 and 26 and is also unable to follow the walking program. *E* proposes a program based on the *recommendations of E's* physician. The plan agrees to make the discount available to *E* if *E* follows the physician's recommendations.

(ii) *Conclusion.* In this *Example 4*, the program satisfies the five requirements of paragraph (f)(2) of this section. First, the program complies with the limits on rewards under a program. Second, it is reasonably designed to promote health or prevent disease. Third, individuals eligible for the program are given the opportunity to qualify for the reward at least once per year. Fourth, the reward under the program is available to all similarly situated individuals because it generally accommodates individuals for whom it is unreasonably difficult due to a medical condition to achieve (or for whom it is medically inadvisable to attempt to achieve) the targeted body mass index by providing a reasonable alternative standard (walking) and it accommodates individuals for whom it is unreasonably difficult due to a medical condition (or for whom it is medically inadvisable to attempt) to walk by providing an alternative standard that is reasonable for the individual. Fifth, the plan discloses in all materials describing the terms of the program the availability of a reasonable alternative standard for every individual. Thus, the waiver of the deductible does not violate this section.

Example 5. (i) *Facts.* In conjunction with an annual open enrollment period, a group health plan provides a form for participants to certify that they have not used tobacco products in the preceding twelve months. Participants who do not provide the certification are assessed a surcharge that is 20 percent of the cost of employee-only coverage. However, all plan materials describing the terms of the wellness program include the following statement: ''If it is unreasonably difficult due to a health factor for you to meet the requirements under this program (or if it is medically inadvisable for you to attempt to meet the requirements of this program), we will make available a reasonable alternative standard for you to avoid this surcharge.'' It is unreasonably difficult for Individual *F* to stop smoking cigarettes due to an addiction to nicotine (a medical condition). The plan accommodates *F* by requiring *F* to participate in a smoking cessation program to avoid the surcharge. *F* can avoid the surcharge for as long as *F* participates in the program, regardless of whether *F* stops smoking (as long as *F* continues to be addicted to nicotine).

(ii) *Conclusion.* In this *Example 5*, the premium surcharge is permissible as a wellness program because it satisfies the five requirements of paragraph (f)(2) of this section. First, the program complies with the limits on rewards under a program. Second, it is reasonably designed to promote health or prevent disease. Third, individuals eligible for the program are given the opportunity to qualify for the reward at least once per year. Fourth, the reward under the program is available to all similarly situated individuals because it accommodates individuals for whom it is unreasonably difficult due to a medical condition (or for whom it is medically inadvisable to attempt) to quit using tobacco products by providing a reasonable alternative standard. Fifth, the plan discloses in all materials describing the terms of the program the availability of a reasonable alternative standard. Thus, the premium surcharge does not violate this section.

Example 6. (i) *Facts.* Same facts as *Example 5,* except the plan accommodates *F* by requiring *F* to view, over a period of 12 months, a 12-hour video series on health problems associated with tobacco use. *F* can avoid the surcharge by complying with this requirement.

(ii) *Conclusion.* In this *Example 6*, the requirement to watch the series of video tapes is a reasonable alternative method for avoiding the surcharge.

(g) *More favorable treatment of individuals with adverse health factors permitted*—(1) *In rules for eligibility*—(i) Nothing in this section prevents a group health plan from establishing more favorable rules for eligibility (described in paragraph (b)(1) of this section) for individuals with an adverse health factor, such as disability, than for individuals without the adverse health factor. Moreover, nothing in this section prevents a plan from charging a higher premium or contribution with respect to individuals with an adverse health factor if they would not be eligible for the coverage were it not for the adverse health factor. (However, other laws, including State insurance laws, may set or limit premium rates; these laws are not affected by this section.)

(ii) The rules of this paragraph (g)(1) are illustrated by the following examples:

Example 1. (i) *Facts.* An employer sponsors a group health plan that generally is available to employees, spouses of employees, and dependent children until age 23. However, dependent children who are disabled are eligible for coverage beyond age 23.

(ii) *Conclusion.* In this *Example 1*, the plan provision allowing coverage for disabled dependent children beyond age 23 satisfies this paragraph (g)(1) (and thus does not violate this section).

Example 2. (i) *Facts.* An employer sponsors a group health plan, which is generally available to employees (and members of the employee's family) until the last day of the month in which the employee ceases to perform services for the employer. The plan generally charges employees $50 per month for employee-only coverage and $125 per month for family coverage. However, an employee who ceases to perform services for the employer by reason of disability may remain covered under the plan until the last day of the month that is 12 months after the month in which the employee ceased to perform services for the employer. During this extended period of coverage, the plan charges the employee $100 per month for employee-only coverage and $250 per month for family coverage. (This extended period of coverage is without regard to whatever rights the employee (or members of the employee's family) may have for COBRA continuation coverage.)

(ii) *Conclusion.* In this *Example 2*, the plan provision allowing extended coverage for disabled employees and their families satisfies this paragraph (g)(1) (and thus does not violate this section). In addition, the plan is permitted, under this paragraph (g)(1), to charge the disabled employees a higher premium during the extended period of coverage.

Example 3. (i) *Facts.* To comply with the requirements of a COBRA continuation provision, a group health plan generally makes COBRA continuation coverage available for a maximum period of 18 months in connection with a termination of employment but makes the coverage

available for a maximum period of 29 months to certain disabled individuals and certain members of the disabled individual's family. Although the plan generally requires payment of 102 percent of the applicable premium for the first 18 months of COBRA continuation coverage, the plan requires payment of 150 percent of the applicable premium for the disabled individual's COBRA continuation coverage during the disability extension if the disabled individual would not be entitled to COBRA continuation coverage but for the disability.

(ii) *Conclusion.* In this *Example 3*, the plan provision allowing extended COBRA continuation coverage for disabled individuals satisfies this paragraph (g)(1) (and thus does not violate this section). In addition, the plan is permitted, under this paragraph (g)(1), to charge the disabled individuals a higher premium for the extended coverage if the individuals would not be eligible for COBRA continuation coverage were it not for the disability. (Similarly, if the plan provided an extended period of coverage for disabled individuals pursuant to State law or plan provision rather than pursuant to a COBRA continuation coverage provision, the plan could likewise charge the disabled individuals a higher premium for the extended coverage.)

(2) *In premiums or contributions*—(i) Nothing in this section prevents a group health plan from charging individuals a premium or contribution that is less than the premium (or contribution) for similarly situated individuals if the lower charge is based on an adverse health factor, such as disability.

(ii) The rules of this paragraph (g)(2) are illustrated by the following example:

Example. (i) *Facts.* Under a group health plan, employees are generally required to pay $50 per month for employee-only coverage and $125 per month for family coverage under the plan. However, employees who are disabled receive coverage (whether employee-only or family coverage) under the plan free of charge.

(ii) *Conclusion.* In this *Example*, the plan provision waiving premium payment for disabled employees is permitted under this paragraph (g)(2) (and thus does not violate this section).

(h) *No effect on other laws.* Compliance with this section is not determinative of compliance with any provision of ERISA (including the COBRA continuation provisions) or any other State or Federal law, such as the Americans with Disabilities Act. Therefore, although the rules of this section would not prohibit a plan from treating one group of similarly situated individuals differently from another (such as providing different benefit packages to current and former employees), other Federal or State laws may require that two separate groups of similarly situated individuals be treated the same for certain purposes (such as making the same benefit package available to COBRA qualified beneficiaries as is made available to active employees). In addition, although this section generally does not impose new disclosure obligations on plans, this section does not affect any other laws, including those that require accurate disclosures and prohibit intentional misrepresentation.

(i) *Applicability dates.* This section applies for plan years beginning on or after July 1, 2007.

Mark E. Matthews,

Deputy Commissioner for Services and Enforcement, Internal Revenue Service.

Approved: June 22, 2006.

Eric Solomon,

Acting Deputy Assistant Secretary of the Treasury (Tax Policy).

Employee Benefits Security Administration

29 CFR Chapter XXV

■ For the reasons set forth above, 29 CFR Part 2590 is amended as follows:

PART 2590—RULES AND REGULATIONS FOR GROUP HEALTH PLANS

■ 1. The authority citation for Part 2590 continues to read as follows:

Authority: 29 U.S.C. 1027, 1059, 1135, 1161–1168, 1169, 1181–1183, 1181 note, 1185, 1185a, 1185b, 1191, 1191a, 1191b, and 1191c, sec. 101(g), Public Law 104–191, 110 Stat. 1936; sec. 401(b), Public Law 105–200, 112 Stat. 645 (42 U.S.C. 651 note); Secretary of Labor's Order 1–2003, 68 FR 5374 (Feb. 3, 2003).

■ 2. Section 2590.702 is revised to read as follows:

§ 2590.702 Prohibiting discrimination against participants and beneficiaries based on a health factor.

(a) *Health factors.* (1) The term *health factor* means, in relation to an individual, any of the following health status-related factors:

(i) Health status;

(ii) Medical condition (including both physical and mental illnesses), as defined in § 2590.701–2;

(iii) Claims experience;

(iv) Receipt of health care;

(v) Medical history;

(vi) Genetic information, as defined in § 2590.701–2;

(vii) Evidence of insurability; or

(viii) Disability.

(2) Evidence of insurability includes—

(i) Conditions arising out of acts of domestic violence; and

(ii) Participation in activities such as motorcycling, snowmobiling, all-terrain vehicle riding, horseback riding, skiing, and other similar activities.

(3) The decision whether health coverage is elected for an individual (including the time chosen to enroll, such as under special enrollment or late enrollment) is not, itself, within the scope of any health factor. (However, under § 2590.701–6, a plan or issuer must treat special enrollees the same as similarly situated individuals who are enrolled when first eligible.)

(b) *Prohibited discrimination in rules for eligibility*—(1) *In general*—(i) A group health plan, and a health insurance issuer offering health insurance coverage in connection with a group health plan, may not establish any rule for eligibility (including continued eligibility) of any individual to enroll for benefits under the terms of the plan or group health insurance coverage that discriminates based on any health factor that relates to that individual or a dependent of that individual. This rule is subject to the provisions of paragraph (b)(2) of this section (explaining how this rule applies to benefits), paragraph (b)(3) of this section (allowing plans to impose certain preexisting condition exclusions), paragraph (d) of this section (containing rules for establishing groups of similarly situated individuals), paragraph (e) of this section (relating to nonconfinement, actively-at-work, and other service requirements), paragraph (f) of this section (relating to wellness programs), and paragraph (g) of this section (permitting favorable treatment of individuals with adverse health factors).

(ii) For purposes of this section, rules for eligibility include, but are not limited to, rules relating to—

(A) Enrollment;

(B) The effective date of coverage;

(C) Waiting (or affiliation) periods;

(D) Late and special enrollment;

(E) Eligibility for benefit packages (including rules for individuals to change their selection among benefit packages);

(F) Benefits (including rules relating to covered benefits, benefit restrictions, and cost-sharing mechanisms such as coinsurance, copayments, and deductibles), as described in paragraphs (b)(2) and (3) of this section;

(G) Continued eligibility; and

(H) Terminating coverage (including disenrollment) of any individual under the plan.

(iii) The rules of this paragraph (b)(1) are illustrated by the following examples:

Example 1. (i) *Facts.* An employer sponsors a group health plan that is available to all employees who enroll within the first 30 days of their employment. However, employees who do not enroll within the first

30 days cannot enroll later unless they pass a physical examination.

(ii) *Conclusion.* In this *Example 1*, the requirement to pass a physical examination in order to enroll in the plan is a rule for eligibility that discriminates based on one or more health factors and thus violates this paragraph (b)(1).

Example 2. (i) *Facts.* Under an employer's group health plan, employees who enroll during the first 30 days of employment (and during special enrollment periods) may choose between two benefit packages: an indemnity option and an HMO option. However, employees who enroll during late enrollment are permitted to enroll only in the HMO option and only if they provide evidence of good health.

(ii) *Conclusion.* In this *Example 2*, the requirement to provide evidence of good health in order to be eligible for late enrollment in the HMO option is a rule for eligibility that discriminates based on one or more health factors and thus violates this paragraph (b)(1). However, if the plan did not require evidence of good health but limited late enrollees to the HMO option, the plan's rules for eligibility would not discriminate based on any health factor, and thus would not violate this paragraph (b)(1), because the time an individual chooses to enroll is not, itself, within the scope of any health factor.

Example 3. (i) *Facts.* Under an employer's group health plan, all employees generally may enroll within the first 30 days of employment. However, individuals who participate in certain recreational activities, including motorcycling, are excluded from coverage.

(ii) *Conclusion.* In this *Example 3*, excluding from the plan individuals who participate in recreational activities, such as motorcycling, is a rule for eligibility that discriminates based on one more health factors and thus violates this paragraph (b)(1).

Example 4. (i) *Facts.* A group health plan applies for a group health policy offered by an issuer. As part of the application, the issuer receives health information about individuals to be covered under the plan. Individual *A* is an employee of the employer maintaining the plan. *A* and *A*'s dependents have a history of high health claims. Based on the information about *A* and *A*'s dependents, the issuer excludes *A* and *A*'s dependents from the group policy it offers to the employer.

(ii) *Conclusion.* In this *Example 4*, the issuer's exclusion of *A* and *A*'s dependents from coverage is a rule for eligibility that discriminates based on one or more health factors, and thus violates this paragraph (b)(1). (If the employer is a small employer under 45 CFR 144.103 (generally, an employer with 50 or fewer employees), the issuer also may violate 45 CFR 146.150, which requires issuers to offer all the policies they sell in the small group market on a guaranteed available basis to all small employers and to accept every eligible individual in every small employer group.) If the plan provides coverage through this policy and does not provide equivalent coverage for *A* and *A*'s dependents through other means, the plan will also violate this paragraph (b)(1).

(2) *Application to benefits*—(i) *General rule*—(A) Under this section, a group health plan or group health insurance issuer is not required to provide coverage for any particular benefit to any group of similarly situated individuals.

(B) However, benefits provided under a plan or through group health insurance coverage must be uniformly available to all similarly situated individuals (as described in paragraph (d) of this section). Likewise, any restriction on a benefit or benefits must apply uniformly to all similarly situated individuals and must not be directed at individual participants or beneficiaries based on any health factor of the participants or beneficiaries (determined based on all the relevant facts and circumstances). Thus, for example, a plan or issuer may limit or exclude benefits in relation to a specific disease or condition, limit or exclude benefits for certain types of treatments or drugs, or limit or exclude benefits based on a determination of whether the benefits are experimental or not medically necessary, but only if the benefit limitation or exclusion applies uniformly to all similarly situated individuals and is not directed at individual participants or beneficiaries based on any health factor of the participants or beneficiaries. In addition, a plan or issuer may impose annual, lifetime, or other limits on benefits and may require the satisfaction of a deductible, copayment, coinsurance, or other cost-sharing requirement in order to obtain a benefit if the limit or cost-sharing requirement applies uniformly to all similarly situated individuals and is not directed at individual participants or beneficiaries based on any health factor of the participants or beneficiaries. In the case of a cost-sharing requirement, see also paragraph (b)(2)(ii) of this section, which permits variances in the application of a cost-sharing mechanism made available under a wellness program. (Whether any plan provision or practice with respect to benefits complies with this paragraph (b)(2)(i) does not affect whether the provision or practice is permitted under any other provision of the Act, the Americans with Disabilities Act, or any other law, whether State or Federal.)

(C) For purposes of this paragraph (b)(2)(i), a plan amendment applicable to all individuals in one or more groups of similarly situated individuals under the plan and made effective no earlier than the first day of the first plan year after the amendment is adopted is not considered to be directed at any individual participants or beneficiaries.

(D) The rules of this paragraph (b)(2)(i) are illustrated by the following examples:

Example 1. (i) *Facts.* A group health plan applies a $500,000 lifetime limit on all benefits to each participant or beneficiary covered under the plan. The limit is not directed at individual participants or beneficiaries.

(ii) *Conclusion.* In this *Example 1*, the limit does not violate this paragraph (b)(2)(i) because $500,000 of benefits are available uniformly to each participant and beneficiary under the plan and because the limit is applied uniformly to all participants and beneficiaries and is not directed at individual participants or beneficiaries.

Example 2. (i) *Facts.* A group health plan has a $2 million lifetime limit on all benefits (and no other lifetime limits) for participants covered under the plan. Participant *B* files a claim for the treatment of AIDS. At the next corporate board meeting of the plan sponsor, the claim is discussed. Shortly thereafter, the plan is modified to impose a $10,000 lifetime limit on benefits for the treatment of AIDS, effective before the beginning of the next plan year.

(ii) *Conclusion.* The facts of this *Example 2* strongly suggest that the plan modification is directed at *B* based on *B*'s claim. Absent outweighing evidence to the contrary, the plan violates this paragraph (b)(2)(i).

Example 3. (i) *Facts.* A group health plan applies for a group health policy offered by an issuer. Individual *C* is covered under the plan and has an adverse health condition. As part of the application, the issuer receives health information about the individuals to be covered, including information about *C*'s adverse health condition. The policy form offered by the issuer generally provides benefits for the adverse health condition that *C* has, but in this case the issuer offers the plan a policy modified by a rider that excludes benefits for *C* for that condition. The exclusionary rider is made effective the first day of the next plan year.

(ii) *Conclusion.* In this *Example 3*, the issuer violates this paragraph (b)(2)(i) because benefits for *C*'s condition are available to other individuals in the group of similarly situated individuals that includes *C* but are not available to *C*. Thus, the benefits are not uniformly available to all similarly situated individuals. Even though the exclusionary rider is made effective the first day of the next plan year, because the rider does not apply to all similarly situated individuals, the issuer violates this paragraph (b)(2)(i).

Example 4. (i) *Facts.* A group health plan has a $2,000 lifetime limit for the treatment of temporomandibular joint syndrome (TMJ). The limit is applied uniformly to all similarly situated individuals and is not directed at individual participants or beneficiaries.

(ii) *Conclusion.* In this *Example 4*, the limit does not violate this paragraph (b)(2)(i) because $2,000 of benefits for the treatment of TMJ are available uniformly to all similarly situated individuals and a plan may limit benefits covered in relation to a specific disease or condition if the limit applies uniformly to all similarly situated

individuals and is not directed at individual participants or beneficiaries. (This example does not address whether the plan provision is permissible under the Americans with Disabilities Act or any other applicable law.)

Example 5. (i) *Facts.* A group health plan applies a $2 million lifetime limit on all benefits. However, the $2 million lifetime limit is reduced to $10,000 for any participant or beneficiary covered under the plan who has a congenital heart defect.

(ii) *Conclusion.* In this *Example 5*, the lower lifetime limit for participants and beneficiaries with a congenital heart defect violates this paragraph (b)(2)(i) because benefits under the plan are not uniformly available to all similarly situated individuals and the plan's lifetime limit on benefits does not apply uniformly to all similarly situated individuals.

Example 6. (i) *Facts.* A group health plan limits benefits for prescription drugs to those listed on a drug formulary. The limit is applied uniformly to all similarly situated individuals and is not directed at individual participants or beneficiaries.

(ii) *Conclusion.* In this *Example 6*, the exclusion from coverage of drugs not listed on the drug formulary does not violate this paragraph (b)(2)(i) because benefits for prescription drugs listed on the formulary are uniformly available to all similarly situated individuals and because the exclusion of drugs not listed on the formulary applies uniformly to all similarly situated individuals and is not directed at individual participants or beneficiaries.

Example 7. (i) *Facts.* Under a group health plan, doctor visits are generally subject to a $250 annual deductible and 20 percent coinsurance requirement. However, prenatal doctor visits are not subject to any deductible or coinsurance requirement. These rules are applied uniformly to all similarly situated individuals and are not directed at individual participants or beneficiaries.

(ii) *Conclusion.* In this *Example 7*, imposing different deductible and coinsurance requirements for prenatal doctor visits and other visits does not violate this paragraph (b)(2)(i) because a plan may establish different deductibles or coinsurance requirements for different services if the deductible or coinsurance requirement is applied uniformly to all similarly situated individuals and is not directed at individual participants or beneficiaries.

Example 8. (i) *Facts.* An employer sponsors a group health plan that is available to all current employees. Under the plan, the medical care expenses of each employee (and the employee's dependents) are reimbursed up to an annual maximum amount. The maximum reimbursement amount with respect to an employee for a year is $1500 multiplied by the number of years the employee has participated in the plan, reduced by the total reimbursements for prior years.

(ii) *Conclusion.* In this *Example 8*, the variable annual limit does not violate this paragraph (b)(2)(i). Although the maximum reimbursement amount for a year varies among employees within the same group of similarly situated individuals based on prior claims experience, employees who have participated in the plan for the same length of time are eligible for the same total benefit over that length of time (and the restriction on the maximum reimbursement amount is not directed at any individual participants or beneficiaries based on any health factor).

(ii) *Exception for wellness programs.* A group health plan or group health insurance issuer may vary benefits, including cost-sharing mechanisms (such as a deductible, copayment, or coinsurance), based on whether an individual has met the standards of a wellness program that satisfies the requirements of paragraph (f) of this section.

(iii) *Specific rule relating to source-of-injury exclusions*—(A) If a group health plan or group health insurance coverage generally provides benefits for a type of injury, the plan or issuer may not deny benefits otherwise provided for treatment of the injury if the injury results from an act of domestic violence or a medical condition (including both physical and mental health conditions). This rule applies in the case of an injury resulting from a medical condition even if the condition is not diagnosed before the injury.

(B) The rules of this paragraph (b)(2)(iii) are illustrated by the following examples:

Example 1. (i) *Facts.* A group health plan generally provides medical/surgical benefits, including benefits for hospital stays, that are medically necessary. However, the plan excludes benefits for self-inflicted injuries or injuries sustained in connection with attempted suicide. Because of depression, Individual *D* attempts suicide. As a result, *D* sustains injuries and is hospitalized for treatment of the injuries. Under the exclusion, the plan denies *D* benefits for treatment of the injuries.

(ii) *Conclusion.* In this *Example 1*, the suicide attempt is the result of a medical condition (depression). Accordingly, the denial of benefits for the treatments of *D*'s injuries violates the requirements of this paragraph (b)(2)(iii) because the plan provision excludes benefits for treatment of an injury resulting from a medical condition.

Example 2. (i) *Facts.* A group health plan provides benefits for head injuries generally. The plan also has a general exclusion for any injury sustained while participating in any of a number of recreational activities, including bungee jumping. However, this exclusion does not apply to any injury that results from a medical condition (nor from domestic violence). Participant *E* sustains a head injury while bungee jumping. The injury did not result from a medical condition (nor from domestic violence). Accordingly, the plan denies benefits for *E*'s head injury.

(ii) *Conclusion.* In this *Example 2,* the plan provision that denies benefits based on the source of an injury does not restrict benefits based on an act of domestic violence or any medical condition. Therefore, the provision is permissible under this paragraph (b)(2)(iii) and does not violate this section. (However, if the plan did not allow *E* to enroll in the plan (or applied different rules for eligibility to *E*) because *E* frequently participates in bungee jumping, the plan would violate paragraph (b)(1) of this section.)

(3) *Relationship to § 2590.701–3.* (i) A preexisting condition exclusion is permitted under this section if it —

(A) Complies with § 2590.701–3;

(B) Applies uniformly to all similarly situated individuals (as described in paragraph (d) of this section); and

(C) Is not directed at individual participants or beneficiaries based on any health factor of the participants or beneficiaries. For purposes of this paragraph (b)(3)(i)(C), a plan amendment relating to a preexisting condition exclusion applicable to all individuals in one or more groups of similarly situated individuals under the plan and made effective no earlier than the first day of the first plan year after the amendment is adopted is not considered to be directed at any individual participants or beneficiaries.

(ii) The rules of this paragraph (b)(3) are illustrated by the following examples:

Example 1. (i) *Facts.* A group health plan imposes a preexisting condition exclusion on all individuals enrolled in the plan. The exclusion applies to conditions for which medical advice, diagnosis, care, or treatment was recommended or received within the six-month period ending on an individual's enrollment date. In addition, the exclusion generally extends for 12 months after an individual's enrollment date, but this 12-month period is offset by the number of days of an individual's creditable coverage in accordance with § 2590.701–3. There is nothing to indicate that the exclusion is directed at individual participants or beneficiaries.

(ii) *Conclusion.* In this *Example 1,* even though the plan's preexisting condition exclusion discriminates against individuals based on one or more health factors, the preexisting condition exclusion does not violate this section because it applies uniformly to all similarly situated individuals, is not directed at individual participants or beneficiaries, and complies with § 2590.701–3 (that is, the requirements relating to the six-month look-back period, the 12-month (or 18-month) maximum exclusion period, and the creditable coverage offset).

Example 2. (i) *Facts.* A group health plan excludes coverage for conditions with respect to which medical advice, diagnosis, care, or treatment was recommended or received within the six-month period ending on an individual's enrollment date. Under the plan, the preexisting condition exclusion generally extends for 12 months, offset by creditable coverage. However, if an individual has no claims in the first six months following enrollment, the remainder of the exclusion period is waived.

(ii) *Conclusion.* In this *Example 2,* the plan's preexisting condition exclusions violate this section because they do not meet the requirements of this paragraph (b)(3); specifically, they do not apply uniformly to all similarly situated individuals. The plan provisions do not apply uniformly to all similarly situated individuals because individuals who have medical claims during the first six months following enrollment are not treated the same as similarly situated individuals with no claims during that period. (Under paragraph (d) of this section, the groups cannot be treated as two separate groups of similarly situated individuals because the distinction is based on a health factor.)

(c) *Prohibited discrimination in premiums or contributions*—(1) *In general*—(i) A group health plan, and a health insurance issuer offering health insurance coverage in connection with a group health plan, may not require an individual, as a condition of enrollment or continued enrollment under the plan or group health insurance coverage, to pay a premium or contribution that is greater than the premium or contribution for a similarly situated individual (described in paragraph (d) of this section) enrolled in the plan or group health insurance coverage based on any health factor that relates to the individual or a dependent of the individual.

(ii) Discounts, rebates, payments in kind, and any other premium differential mechanisms are taken into account in determining an individual's premium or contribution rate. (For rules relating to cost-sharing mechanisms, see paragraph (b)(2) of this section (addressing benefits).)

(2) *Rules relating to premium rates*—(i) *Group rating based on health factors not restricted under this section.* Nothing in this section restricts the aggregate amount that an employer may be charged for coverage under a group health plan.

(ii) *List billing based on a health factor prohibited.* However, a group health insurance issuer, or a group health plan, may not quote or charge an employer (or an individual) a different premium for an individual in a group of similarly situated individuals based on a health factor. (But see paragraph (g) of this section permitting favorable treatment of individuals with adverse health factors.)

(iii) *Examples.* The rules of this paragraph (c)(2) are illustrated by the following examples:

Example 1. (i) *Facts.* An employer sponsors a group health plan and purchases coverage from a health insurance issuer. In order to determine the premium rate for the upcoming plan year, the issuer reviews the claims experience of individuals covered under the plan. The issuer finds that Individual *F* had significantly higher claims experience than similarly situated individuals in the plan. The issuer quotes the plan a higher per-participant rate because of *F*'s claims experience.

(ii) *Conclusion.* In this *Example 1*, the issuer does not violate the provisions of this paragraph (c)(2) because the issuer blends the rate so that the employer is not quoted a higher rate for *F* than for a similarly situated individual based on *F*'s claims experience.

Example 2. (i) *Facts.* Same facts as *Example 1,* except that the issuer quotes the employer a higher premium rate for *F*, because of *F*'s claims experience, than for a similarly situated individual.

(ii) *Conclusion.* In this *Example 2,* the issuer violates this paragraph (c)(2). Moreover, even if the plan purchased the policy based on the quote but did not require a higher participant contribution for *F* than for a similarly situated individual, the issuer would still violate this paragraph (c)(2) (but in such a case the plan would not violate this paragraph (c)(2)).

(3) *Exception for wellness programs.* Notwithstanding paragraphs (c)(1) and (2) of this section, a plan or issuer may vary the amount of premium or contribution it requires similarly situated individuals to pay based on whether an individual has met the standards of a wellness program that satisfies the requirements of paragraph (f) of this section.

(d) *Similarly situated individuals.* The requirements of this section apply only within a group of individuals who are treated as similarly situated individuals. A plan or issuer may treat participants as a group of similarly situated individuals separate from beneficiaries. In addition, participants may be treated as two or more distinct groups of similarly situated individuals and beneficiaries may be treated as two or more distinct groups of similarly situated individuals in accordance with the rules of this paragraph (d). Moreover, if individuals have a choice of two or more benefit packages, individuals choosing one benefit package may be treated as one or more groups of similarly situated individuals distinct from individuals choosing another benefit package.

(1) *Participants.* Subject to paragraph (d)(3) of this section, a plan or issuer may treat participants as two or more distinct groups of similarly situated individuals if the distinction between or among the groups of participants is based on a bona fide employment-based classification consistent with the employer's usual business practice. Whether an employment-based classification is bona fide is determined on the basis of all the relevant facts and circumstances. Relevant facts and circumstances include whether the employer uses the classification for purposes independent of qualification for health coverage (for example, determining eligibility for other employee benefits or determining other terms of employment). Subject to paragraph (d)(3) of this section, examples of classifications that, based on all the relevant facts and circumstances, may be bona fide include full-time versus part-time status, different geographic location, membership in a collective bargaining unit, date of hire, length of service, current employee versus former employee status, and different occupations. However, a classification based on any health factor is not a bona fide employment-based classification, unless the requirements of paragraph (g) of this section are satisfied (permitting favorable treatment of individuals with adverse health factors).

(2) *Beneficiaries*—(i) Subject to paragraph (d)(3) of this section, a plan or issuer may treat beneficiaries as two or more distinct groups of similarly situated individuals if the distinction between or among the groups of beneficiaries is based on any of the following factors:

(A) A bona fide employment-based classification of the participant through whom the beneficiary is receiving coverage;

(B) Relationship to the participant (for example, as a spouse or as a dependent child);

(C) Marital status;

(D) With respect to children of a participant, age or student status; or

(E) Any other factor if the factor is not a health factor.

(ii) Paragraph (d)(2)(i) of this section does not prevent more favorable treatment of individuals with adverse health factors in accordance with paragraph (g) of this section.

(3) *Discrimination directed at individuals.* Notwithstanding paragraphs (d)(1) and (2) of this section, if the creation or modification of an employment or coverage classification is directed at individual participants or beneficiaries based on any health factor of the participants or beneficiaries, the classification is not permitted under this paragraph (d), unless it is permitted under paragraph (g) of this section (permitting favorable treatment of individuals with adverse health factors). Thus, if an employer modified an employment-based classification to single out, based on a health factor, individual participants and beneficiaries and deny them health coverage, the new classification would not be permitted under this section.

(4) *Examples.* The rules of this paragraph (d) are illustrated by the following examples:

Example 1. (i) *Facts.* An employer sponsors a group health plan for full-time employees only. Under the plan (consistent with the employer's usual business practice), employees who normally work at least 30 hours per week are considered to be working full-time. Other employees are considered to be working part-time. There is no evidence to suggest that the classification is directed at individual participants or beneficiaries.

(ii) *Conclusion.* In this *Example 1,* treating the full-time and part-time employees as two separate groups of similarly situated individuals is permitted under this paragraph (d) because the classification is bona fide and is not directed at individual participants or beneficiaries.

Example 2. (i) *Facts.* Under a group health plan, coverage is made available to employees, their spouses, and their dependent children. However, coverage is made available to a dependent child only if the dependent child is under age 19 (or under age 25 if the child is continuously enrolled full-time in an institution of higher learning (full-time students)). There is no evidence to suggest that these classifications are directed at individual participants or beneficiaries.

(ii) *Conclusion.* In this *Example 2,* treating spouses and dependent children differently by imposing an age limitation on dependent children, but not on spouses, is permitted under this paragraph (d). Specifically, the distinction between spouses and dependent children is permitted under paragraph (d)(2) of this section and is not prohibited under paragraph (d)(3) of this section because it is not directed at individual participants or beneficiaries. It is also permissible to treat dependent children who are under age 19 (or full-time students under age 25) as a group of similarly situated individuals separate from those who are age 25 or older (or age 19 or older if they are not full-time students) because the classification is permitted under paragraph (d)(2) of this section and is not directed at individual participants or beneficiaries.

Example 3. (i) *Facts.* A university sponsors a group health plan that provides one health benefit package to faculty and another health benefit package to other staff. Faculty and staff are treated differently with respect to other employee benefits such as retirement benefits and leaves of absence. There is no evidence to suggest that the distinction is directed at individual participants or beneficiaries.

(ii) *Conclusion.* In this *Example 3,* the classification is permitted under this paragraph (d) because there is a distinction based on a bona fide employment-based classification consistent with the employer's usual business practice and the distinction is not directed at individual participants and beneficiaries.

Example 4. (i) *Facts.* An employer sponsors a group health plan that is available to all current employees. Former employees may also be eligible, but only if they complete a specified number of years of service, are enrolled under the plan at the time of termination of employment, and are continuously enrolled from that date. There is no evidence to suggest that these distinctions are directed at individual participants or beneficiaries.

(ii) *Conclusion.* In this *Example 4,* imposing additional eligibility requirements on former employees is permitted because a classification that distinguishes between current and former employees is a bona fide employment-based classification that is permitted under this paragraph (d), provided that it is not directed at individual participants or beneficiaries. In addition, it is permissible to distinguish between former employees who satisfy the service requirement and those who do not, provided that the distinction is not directed at individual participants or beneficiaries. (However, former employees who do not satisfy the eligibility criteria may, nonetheless, be eligible for continued coverage pursuant to a COBRA continuation provision or similar State law.)

Example 5. (i) *Facts.* An employer sponsors a group health plan that provides the same benefit package to all seven employees of the employer. Six of the seven employees have the same job title and responsibilities, but Employee *G* has a different job title and different responsibilities. After *G* files an expensive claim for benefits under the plan, coverage under the plan is modified so that employees with *G*s job title receive a different benefit package that includes a lower lifetime dollar limit than in the benefit package made available to the other six employees.

(ii) *Conclusion.* Under the facts of this *Example 5,* changing the coverage classification for *G* based on the existing employment classification for *G* is not permitted under this paragraph (d) because the creation of the new coverage classification for *G* is directed at *G* based on one or more health factors.

(e) *Nonconfinement and actively-at-work provisions*—(1) *Nonconfinement provisions*—(i) *General rule.* Under the rules of paragraphs (b) and (c) of this section, a plan or issuer may not establish a rule for eligibility (as described in paragraph (b)(1)(ii) of this section) or set any individual's premium or contribution rate based on whether an individual is confined to a hospital or other health care institution. In addition, under the rules of paragraphs (b) and (c) of this section, a plan or issuer may not establish a rule for eligibility or set any individual's premium or contribution rate based on an individual's ability to engage in normal life activities, except to the extent permitted under paragraphs (e)(2)(ii) and (3) of this section (permitting plans and issuers, under certain circumstances, to distinguish among employees based on the performance of services).

(ii) *Examples.* The rules of this paragraph (e)(1) are illustrated by the following examples:

Example 1. (i) *Facts.* Under a group health plan, coverage for employees and their dependents generally becomes effective on the first day of employment. However, coverage for a dependent who is confined to a hospital or other health care institution does not become effective until the confinement ends.

(ii) *Conclusion.* In this *Example 1,* the plan violates this paragraph (e)(1) because the plan delays the effective date of coverage for dependents based on confinement to a hospital or other health care institution.

Example 2. (i) *Facts.* In previous years, a group health plan has provided coverage through a group health insurance policy offered by Issuer *M.* However, for the current year, the plan provides coverage through a group health insurance policy offered by Issuer *N.* Under Issuer *N*'s policy, items and services provided in connection with the confinement of a dependent to a hospital or other health care institution are not covered if the confinement is covered under an extension of benefits clause from a previous health insurance issuer.

(ii) *Conclusion.* In this *Example 2,* Issuer *N* violates this paragraph (e)(1) because the group health insurance coverage restricts benefits (a rule for eligibility under paragraph (b)(1)) based on whether a dependent is confined to a hospital or other health care institution that is covered under an extension of benefits clause from a previous issuer. State law cannot change the obligation of Issuer *N* under this section. However, under State law Issuer *M* may also be responsible for providing benefits to such a dependent. In a case in which Issuer *N* has an obligation under this section to provide benefits and Issuer *M* has an obligation under State law to provide benefits, any State laws designed to prevent more than 100% reimbursement, such as State coordination-of-benefits laws, continue to apply.

(2) *Actively-at-work and continuous service provisions*—(i) *General rule*—(A) Under the rules of paragraphs (b) and (c) of this section and subject to the exception for the first day of work described in paragraph (e)(2)(ii) of this section, a plan or issuer may not establish a rule for eligibility (as described in paragraph (b)(1)(ii) of this section) or set any individual's premium or contribution rate based on whether an individual is actively at work (including whether an individual is continuously employed), unless absence from work due to any health factor (such as being absent from work on sick leave) is treated, for purposes of the plan or health insurance coverage, as being actively at work.

(B) The rules of this paragraph (e)(2)(i) are illustrated by the following examples:

Example 1. (i) *Facts.* Under a group health plan, an employee generally becomes eligible to enroll 30 days after the first day of employment. However, if the employee is not actively at work on the first day after the end of the 30-day period, then eligibility for

enrollment is delayed until the first day the employee is actively at work.

(ii) *Conclusion.* In this *Example 1,* the plan violates this paragraph (e)(2) (and thus also violates paragraph (b) of this section). However, the plan would not violate paragraph (e)(2) or (b) of this section if, under the plan, an absence due to any health factor is considered being actively at work.

Example 2. (i) *Facts.* Under a group health plan, coverage for an employee becomes effective after 90 days of continuous service; that is, if an employee is absent from work (for any reason) before completing 90 days of service, the beginning of the 90-day period is measured from the day the employee returns to work (without any credit for service before the absence).

(ii) *Conclusion.* In this *Example 2,* the plan violates this paragraph (e)(2) (and thus also paragraph (b) of this section) because the 90-day continuous service requirement is a rule for eligibility based on whether an individual is actively at work. However, the plan would not violate this paragraph (e)(2) or paragraph (b) of this section if, under the plan, an absence due to any health factor is not considered an absence for purposes of measuring 90 days of continuous service.

(ii) *Exception for the first day of work*—(A) Notwithstanding the general rule in paragraph (e)(2)(i) of this section, a plan or issuer may establish a rule for eligibility that requires an individual to begin work for the employer sponsoring the plan (or, in the case of a multiemployer plan, to begin a job in covered employment) before coverage becomes effective, provided that such a rule for eligibility applies regardless of the reason for the absence.

(B) The rules of this paragraph (e)(2)(ii) are illustrated by the following examples:

Example 1. (i) *Facts.* Under the eligibility provision of a group health plan, coverage for new employees becomes effective on the first day that the employee reports to work. Individual *H* is scheduled to begin work on August 3. However, *H* is unable to begin work on that day because of illness. *H* begins working on August 4, and *H*'s coverage is effective on August 4.

(ii) *Conclusion.* In this *Example 1,* the plan provision does not violate this section. However, if coverage for individuals who do not report to work on the first day they were scheduled to work for a reason unrelated to a health factor (such as vacation or bereavement) becomes effective on the first day they were scheduled to work, then the plan would violate this section.

Example 2. (i) *Facts.* Under a group health plan, coverage for new employees becomes effective on the first day of the month following the employee's first day of work, regardless of whether the employee is actively at work on the first day of the month. Individual *J* is scheduled to begin work on March 24. However, *J* is unable to begin work on March 24 because of illness. *J* begins working on April 7 and *J*'s coverage is effective May 1.

(ii) *Conclusion.* In this *Example 2,* the plan provision does not violate this section. However, as in *Example 1,* if coverage for individuals absent from work for reasons unrelated to a health factor became effective despite their absence, then the plan would violate this section.

(3) *Relationship to plan provisions defining similarly situated individuals*—(i) Notwithstanding the rules of paragraphs (e)(1) and (2) of this section, a plan or issuer may establish rules for eligibility or set any individual's premium or contribution rate in accordance with the rules relating to similarly situated individuals in paragraph (d) of this section. Accordingly, a plan or issuer may distinguish in rules for eligibility under the plan between full-time and part-time employees, between permanent and temporary or seasonal employees, between current and former employees, and between employees currently performing services and employees no longer performing services for the employer, subject to paragraph (d) of this section. However, other Federal or State laws (including the COBRA continuation provisions and the Family and Medical Leave Act of 1993) may require an employee or the employee's dependents to be offered coverage and set limits on the premium or contribution rate even though the employee is not performing services.

(ii) The rules of this paragraph (e)(3) are illustrated by the following examples:

Example 1. (i) *Facts.* Under a group health plan, employees are eligible for coverage if they perform services for the employer for 30 or more hours per week or if they are on paid leave (such as vacation, sick, or bereavement leave). Employees on unpaid leave are treated as a separate group of similarly situated individuals in accordance with the rules of paragraph (d) of this section.

(ii) *Conclusion.* In this *Example 1,* the plan provisions do not violate this section. However, if the plan treated individuals performing services for the employer for 30 or more hours per week, individuals on vacation leave, and individuals on bereavement leave as a group of similarly situated individuals separate from individuals on sick leave, the plan would violate this paragraph (e) (and thus also would violate paragraph (b) of this section) because groups of similarly situated individuals cannot be established based on a health factor (including the taking of sick leave) under paragraph (d) of this section.

Example 2. (i) *Facts.* To be eligible for coverage under a bona fide collectively bargained group health plan in the current calendar quarter, the plan requires an individual to have worked 250 hours in covered employment during the three-month period that ends one month before the beginning of the current calendar quarter. The distinction between employees working at least 250 hours and those working less than 250 hours in the earlier three-month period is not directed at individual participants or beneficiaries based on any health factor of the participants or beneficiaries.

(ii) *Conclusion.* In this *Example 2,* the plan provision does not violate this section because, under the rules for similarly situated individuals allowing full-time employees to be treated differently than part-time employees, employees who work at least 250 hours in a three-month period can be treated differently than employees who fail to work 250 hours in that period. The result would be the same if the plan permitted individuals to apply excess hours from previous periods to satisfy the requirement for the current quarter.

Example 3. (i) *Facts.* Under a group health plan, coverage of an employee is terminated when the individual's employment is terminated, in accordance with the rules of paragraph (d) of this section. Employee *B* has been covered under the plan. *B* experiences a disabling illness that prevents *B* from working. *B* takes a leave of absence under the Family and Medical Leave Act of 1993. At the end of such leave, *B* terminates employment and consequently loses coverage under the plan. (This termination of coverage is without regard to whatever rights the employee (or members of the employee's family) may have for COBRA continuation coverage.)

(ii) *Conclusion.* In this *Example 3,* the plan provision terminating *B*'s coverage upon *B*'s termination of employment does not violate this section.

Example 4. (i) *Facts.* Under a group health plan, coverage of an employee is terminated when the employee ceases to perform services for the employer sponsoring the plan, in accordance with the rules of paragraph (d) of this section. Employee *C* is laid off for three months. When the layoff begins, *C*'s coverage under the plan is terminated. (This termination of coverage is without regard to whatever rights the employee (or members of the employee's family) may have for COBRA continuation coverage.)

(ii) *Conclusion.* In this *Example 4,* the plan provision terminating *C*'s coverage upon the cessation of *C*'s performance of services does not violate this section.

(f) *Wellness programs.* A wellness program is any program designed to promote health or prevent disease. Paragraphs (b)(2)(ii) and (c)(3) of this section provide exceptions to the general prohibitions against discrimination based on a health factor for plan provisions that vary benefits (including cost-sharing mechanisms) or the premium or contribution for similarly situated individuals in connection with a wellness program that satisfies the requirements of this paragraph (f). If none of the conditions for obtaining a reward under a wellness program is based on an individual satisfying a standard that is related to a health factor, paragraph (f)(1) of this

section clarifies that the wellness program does not violate this section if participation in the program is made available to all similarly situated individuals. If any of the conditions for obtaining a reward under a wellness program is based on an individual satisfying a standard that is related to a health factor, the wellness program does not violate this section if the requirements of paragraph (f)(2) of this section are met.

(1) *Wellness programs not subject to requirements.* If none of the conditions for obtaining a reward under a wellness program are based on an individual satisfying a standard that is related to a health factor (or if a wellness program does not provide a reward), the wellness program does not violate this section, if participation in the program is made available to all similarly situated individuals. Thus, for example, the following programs need not satisfy the requirements of paragraph (f)(2) of this section, if participation in the program is made available to all similarly situated individuals:

(i) A program that reimburses all or part of the cost for memberships in a fitness center.

(ii) A diagnostic testing program that provides a reward for participation and does not base any part of the reward on outcomes.

(iii) A program that encourages preventive care through the waiver of the copayment or deductible requirement under a group health plan for the costs of, for example, prenatal care or well-baby visits.

(iv) A program that reimburses employees for the costs of smoking cessation programs without regard to whether the employee quits smoking.

(v) A program that provides a reward to employees for attending a monthly health education seminar.

(2) *Wellness programs subject to requirements.* If any of the conditions for obtaining a reward under a wellness program is based on an individual satisfying a standard that is related to a health factor, the wellness program does not violate this section if the requirements of this paragraph (f)(2) are met.

(i) The reward for the wellness program, coupled with the reward for other wellness programs with respect to the plan that require satisfaction of a standard related to a health factor, must not exceed 20 percent of the cost of employee-only coverage under the plan. However, if, in addition to employees, any class of dependents (such as spouses or spouses and dependent children) may participate in the wellness program, the reward must not exceed 20 percent of the cost of the coverage in which an employee and any dependents are enrolled. For purposes of this paragraph (f)(2), the cost of coverage is determined based on the total amount of employer and employee contributions for the benefit package under which the employee is (or the employee and any dependents are) receiving coverage. A reward can be in the form of a discount or rebate of a premium or contribution, a waiver of all or part of a cost-sharing mechanism (such as deductibles, copayments, or coinsurance), the absence of a surcharge, or the value of a benefit that would otherwise not be provided under the plan.

(ii) The program must be reasonably designed to promote health or prevent disease. A program satisfies this standard if it has a reasonable chance of improving the health of or preventing disease in participating individuals and it is not overly burdensome, is not a subterfuge for discriminating based on a health factor, and is not highly suspect in the method chosen to promote health or prevent disease.

(iii) The program must give individuals eligible for the program the opportunity to qualify for the reward under the program at least once per year.

(iv) The reward under the program must be available to all similarly situated individuals.

(A) A reward is not available to all similarly situated individuals for a period unless the program allows—

(1) A reasonable alternative standard (or waiver of the otherwise applicable standard) for obtaining the reward for any individual for whom, for that period, it is unreasonably difficult due to a medical condition to satisfy the otherwise applicable standard; and

(2) A reasonable alternative standard (or waiver of the otherwise applicable standard) for obtaining the reward for any individual for whom, for that period, it is medically inadvisable to attempt to satisfy the otherwise applicable standard.

(B) A plan or issuer may seek verification, such as a statement from an individual's physician, that a health factor makes it unreasonably difficult or medically inadvisable for the individual to satisfy or attempt to satisfy the otherwise applicable standard.

(v)(A) The plan or issuer must disclose in all plan materials describing the terms of the program the availability of a reasonable alternative standard (or the possibility of waiver of the otherwise applicable standard) required under paragraph (f)(2)(iv) of this section. However, if plan materials merely mention that a program is available, without describing its terms, this disclosure is not required.

(B) The following language, or substantially similar language, can be used to satisfy the requirement of this paragraph (f)(2)(v): ''If it is unreasonably difficult due to a medical condition for you to achieve the standards for the reward under this program, or if it is medically inadvisable for you to attempt to achieve the standards for the reward under this program, call us at [insert telephone number] and we will work with you to develop another way to qualify for the reward.'' In addition, other examples of language that would satisfy this requirement are set forth in *Examples 3, 4,* and *5* of paragraph (f)(3) of this section.

(3) *Examples.* The rules of paragraph (f)(2) of this section are illustrated by the following examples:

Example 1. (i) *Facts.* An employer sponsors a group health plan. The annual premium for employee-only coverage is $3,600 (of which the employer pays $2,700 per year and the employee pays $900 per year). The annual premium for family coverage is $9,000 (of which the employer pays $4,500 per year and the employee pays $4,500 per year). The plan offers a wellness program with an annual premium rebate of $360. The program is available only to employees.

(ii) *Conclusion.* In this *Example 1,* the program satisfies the requirements of paragraph (f)(2)(i) of this section because the reward for the wellness program, $360, does not exceed 20 percent of the total annual cost of employee-only coverage, $720. ($3,600 × 20% = $720.) If any class of dependents is allowed to participate in the program and the employee is enrolled in family coverage, the plan could offer the employee a reward of up to 20 percent of the cost of family coverage, $1,800. ($9,000 × 20% = $1,800.)

Example 2. (i) *Facts.* A group health plan gives an annual premium discount of 20 percent of the cost of employee-only coverage to participants who adhere to a wellness program. The wellness program consists solely of giving an annual cholesterol test to participants. Those participants who achieve a count under 200 receive the premium discount for the year.

(ii) *Conclusion.* In this *Example 2,* the program fails to satisfy the requirement of being available to all similarly situated individuals because some participants may be unable to achieve a cholesterol count of under 200 and the plan does not make available a reasonable alternative standard or waive the cholesterol standard. (In addition, plan materials describing the program are required to disclose the availability of a reasonable alternative standard (or the possibility of waiver of the otherwise applicable standard) for obtaining the premium discount. Thus, the premium discount violates paragraph (c) of this section because it may require an individual to pay a higher premium based on a health factor of the individual than is required of a similarly situated individual under the plan.

Example 3. (i) *Facts.* Same facts as *Example 2,* except that the plan provides that if it is unreasonably difficult due to a medical condition for a participant to achieve the targeted cholesterol count (or if it is medically inadvisable for a participant to attempt to achieve the targeted cholesterol count) within a 60-day period, the plan will make available a reasonable alternative standard that takes the relevant medical condition into account. In addition, all plan materials describing the terms of the program include the following statement: ''If it is unreasonably difficult due to a medical condition for you to achieve a cholesterol count under 200, or if it is medically inadvisable for you to attempt to achieve a count under 200, call us at the number below and we will work with you to develop another way to get the discount.'' Individual *D* begins a diet and exercise program but is unable to achieve a cholesterol count under 200 within the prescribed period. *D*'s doctor determines *D* requires prescription medication to achieve a medically advisable cholesterol count. In addition, the doctor determines that *D* must be monitored through periodic blood tests to continually reevaluate *D*'s health status. The plan accommodates *D* by making the discount available to *D*, but only if *D* follows the advice of *D*'s doctor's regarding medication and blood tests.

(ii) *Conclusion.* In this *Example 3,* the program is a wellness program because it satisfies the five requirements of paragraph (f)(2) of this section. First, the program complies with the limits on rewards under a program. Second, it is reasonably designed to promote health or prevent disease. Third, individuals eligible for the program are given the opportunity to qualify for the reward at least once per year. Fourth, the reward under the program is available to all similarly situated individuals because it accommodates individuals for whom it is unreasonably difficult due to a medical condition to achieve the targeted count (or for whom it is medically inadvisable to attempt to achieve the targeted count) in the prescribed period by providing a reasonable alternative standard. Fifth, the plan discloses in all materials describing the terms of the program the availability of a reasonable alternative standard. Thus, the premium discount does not violate this section.

Example 4. (i) *Facts.* A group health plan will waive the $250 annual deductible (which is less than 20 percent of the annual cost of employee-only coverage under the plan) for the following year for participants who have a body mass index between 19 and 26, determined shortly before the beginning of the year. However, any participant for whom it is unreasonably difficult due to a medical condition to attain this standard (and any participant for whom it is medically inadvisable to attempt to achieve this standard) during the plan year is given the same discount if the participant walks for 20 minutes three days a week. Any participant for whom it is unreasonably difficult due to a medical condition to attain either standard (and any participant for whom it is medically inadvisable to attempt to achieve either standard) during the year is given the same discount if the individual satisfies an alternative standard that is reasonable in the burden it imposes and is reasonable taking into consideration the individual's medical situation. All plan materials describing the terms of the wellness program include the following statement: ''If it is unreasonably difficult due to a medical condition for you to achieve a body mass index between 19 and 26 (or if it is medically inadvisable for you to attempt to achieve this body mass index) this year, your deductible will be waived if you walk for 20 minutes three days a week. If you cannot follow the walking program, call us at the number above and we will work with you to develop another way to have your deductible waived.'' Due to a medical condition, Individual *E* is unable to achieve a BMI of between 19 and 26 and is also unable to follow the walking program. *E* proposes a program based on the recommendations of *E*'s physician. The plan agrees to make the discount available to *E* if *E* follows the physician's recommendations.

(ii) *Conclusion.* In this *Example 4,* the program satisfies the five requirements of paragraph (f)(2) of this section. First, the program complies with the limits on rewards under a program. Second, it is reasonably designed to promote health or prevent disease. Third, individuals eligible for the program are given the opportunity to qualify for the reward at least once per year. Fourth, the reward under the program is available to all similarly situated individuals because it generally accommodates individuals for whom it is unreasonably difficult due to a medical condition to achieve (or for whom it is medically inadvisable to attempt to achieve) the targeted body mass index by providing a reasonable alternative standard (walking) and it accommodates individuals for whom it is unreasonably difficult due to a medical condition (or for whom it is medically inadvisable to attempt) to walk by providing an alternative standard that is reasonable for the individual. Fifth, the plan discloses in all materials describing the terms of the program the availability of a reasonable alternative standard for every individual. Thus, the waiver of the deductible does not violate this section.

Example 5. (i) *Facts.* In conjunction with an annual open enrollment period, a group health plan provides a form for participants to certify that they have not used tobacco products in the preceding twelve months. Participants who do not provide the certification are assessed a surcharge that is 20 percent of the cost of employee-only coverage. However, all plan materials describing the terms of the wellness program include the following statement: ''If it is unreasonably difficult due to a health factor for you to meet the requirements under this program (or if it is medically inadvisable for you to attempt to meet the requirements of this program), we will make available a reasonable alternative standard for you to avoid this surcharge.'' It is unreasonably difficult for Individual *F* to stop smoking cigarettes due to an addiction to nicotine (a medical condition). The plan accommodates *F* by requiring *F* to participate in a smoking cessation program to avoid the surcharge. *F* can avoid the surcharge for as long as *F* participates in the program, regardless of whether *F* stops smoking (as long as *F* continues to be addicted to nicotine).

(ii) *Conclusion.* In this *Example 5,* the premium surcharge is permissible as a wellness program because it satisfies the five requirements of paragraph (f)(2) of this section. First, the program complies with the limits on rewards under a program. Second, it is reasonably designed to promote health or prevent disease. Third, individuals eligible for the program are given the opportunity to qualify for the reward at least once per year. Fourth, the reward under the program is available to all similarly situated individuals because it accommodates individuals for whom it is unreasonably difficult due to a medical condition (or for whom it is medically inadvisable to attempt) to quit using tobacco products by providing a reasonable alternative standard. Fifth, the plan discloses in all materials describing the terms of the program the availability of a reasonable alternative standard. Thus, the premium surcharge does not violate this section.

Example 6. (i) *Facts.* Same facts as *Example 5,* except the plan accommodates *F* by requiring *F* to view, over a period of 12 months, a 12-hour video series on health problems associated with tobacco use. *F* can avoid the surcharge by complying with this requirement.

(ii) *Conclusion.* In this *Example 6,* the requirement to watch the series of video tapes is a reasonable alternative method for avoiding the surcharge.

(g) *More favorable treatment of individuals with adverse health factors permitted*—(1) *In rules for eligibility*—(i) Nothing in this section prevents a group health plan or group health insurance issuer from establishing more favorable rules for eligibility (described in paragraph (b)(1) of this section) for individuals with an adverse health factor, such as disability, than for individuals without the adverse health factor. Moreover, nothing in this section prevents a plan or issuer from charging a higher premium or contribution with respect to individuals with an adverse health factor if they would not be eligible for the coverage were it not for the adverse health factor. (However, other laws, including State insurance laws, may set or limit premium rates; these laws are not affected by this section.)

(ii) The rules of this paragraph (g)(1) are illustrated by the following examples:

Example 1. (i) *Facts.* An employer sponsors a group health plan that generally is available to employees, spouses of employees, and dependent children until age 23. However, dependent children who are disabled are eligible for coverage beyond age 23.

(ii) *Conclusion.* In this *Example 1,* the plan provision allowing coverage for disabled dependent children beyond age 23 satisfies this paragraph (g)(1) (and thus does not violate this section).

Example 2. (i) *Facts.* An employer sponsors a group health plan, which is generally available to employees (and members of the employee's family) until the last day of the month in which the employee ceases to perform services for the employer. The plan generally charges employees $50 per month for employee-only coverage and $125 per month for family coverage. However, an employee who ceases to perform services for the employer by reason of disability may remain covered under the plan until the last day of the month that is 12 months after the month in which the employee ceased to perform services for the employer. During this extended period of coverage, the plan charges the employee $100 per month for employee-only coverage and $250 per month for family coverage. (This extended period of coverage is without regard to whatever rights the employee (or members of the employee's family) may have for COBRA continuation coverage.)

(ii) *Conclusion.* In this *Example 2,* the plan provision allowing extended coverage for disabled employees and their families satisfies this paragraph (g)(1) (and thus does not violate this section). In addition, the plan is permitted, under this paragraph (g)(1), to charge the disabled employees a higher premium during the extended period of coverage.

Example 3. (i) *Facts.* To comply with the requirements of a COBRA continuation provision, a group health plan generally makes COBRA continuation coverage available for a maximum period of 18 months in connection with a termination of employment but makes the coverage available for a maximum period of 29 months to certain disabled individuals and certain members of the disabled individual's family. Although the plan generally requires payment of 102 percent of the applicable premium for the first 18 months of COBRA continuation coverage, the plan requires payment of 150 percent of the applicable premium for the disabled individual's COBRA continuation coverage during the disability extension if the disabled individual would not be entitled to COBRA continuation coverage but for the disability.

(ii) *Conclusion.* In this *Example 3,* the plan provision allowing extended COBRA continuation coverage for disabled individuals satisfies this paragraph (g)(1) (and thus does not violate this section). In addition, the plan is permitted, under this paragraph (g)(1), to charge the disabled individuals a higher premium for the extended coverage if the individuals would not be eligible for COBRA continuation coverage were it not for the disability. (Similarly, if the plan provided an extended period of coverage for disabled individuals pursuant to State law or plan provision rather than pursuant to a COBRA continuation coverage provision, the plan could likewise charge the disabled individuals a higher premium for the extended coverage.)

(2) *In premiums or contributions*—(i) Nothing in this section prevents a group health plan or group health insurance issuer from charging individuals a premium or contribution that is less than the premium (or contribution) for similarly situated individuals if the lower charge is based on an adverse health factor, such as disability.

(ii) The rules of this paragraph (g)(2) are illustrated by the following example:

Example. (i) *Facts.* Under a group health plan, employees are generally required to pay $50 per month for employee-only coverage and $125 per month for family coverage under the plan. However, employees who are disabled receive coverage (whether employee-only or family coverage) under the plan free of charge.

(ii) *Conclusion.* In this *Example,* the plan provision waiving premium payment for disabled employees is permitted under this paragraph (g)(2) (and thus does not violate this section).

(h) *No effect on other laws.* Compliance with this section is not determinative of compliance with any other provision of the Act (including the COBRA continuation provisions) or any other State or Federal law, such as the Americans with Disabilities Act. Therefore, although the rules of this section would not prohibit a plan or issuer from treating one group of similarly situated individuals differently from another (such as providing different benefit packages to current and former employees), other Federal or State laws may require that two separate groups of similarly situated individuals be treated the same for certain purposes (such as making the same benefit package available to COBRA qualified beneficiaries as is made available to active employees). In addition, although this section generally does not impose new disclosure obligations on plans and issuers, this section does not affect any other laws, including those that require accurate disclosures and prohibit intentional misrepresentation.

(i) *Applicability dates.* This section applies for plan years beginning on or after July 1, 2007.

Signed at Washington, DC this 1st day of December, 2006.

Bradford P. Campbell,

Acting Assistant Secretary, Employee Benefits Security Administration, U.S. Department of Labor.

■ For the reasons set forth above, 45 CFR part 146 is amended as follows:

PART 146—REQUIREMENTS FOR THE GROUP HEALTH INSURANCE MARKET

■ 1. Paragraph (b)(1)(vi) is added to § 146.101 as follows:

§ 146.101 Basis and scope

* * * * *

(b) * * *

(1) * * *

(vi) Prohibiting discrimination against participants and beneficiaries based on a health factor.

* * * * *

■ 2. Section 146.121 is revised to read as follows:

§ 146.121 Prohibiting discrimination against participants and beneficiaries based on a health factor.

(a) *Health factors.* (1) The term *health factor* means, in relation to an individual, any of the following health status-related factors:

(i) Health status;

(ii) Medical condition (including both physical and mental illnesses), as defined in § 144.103 of this chapter;

(iii) Claims experience;

(iv) Receipt of health care;

(v) Medical history;

(vi) Genetic information, as defined in § 144.103 of this chapter;

(vii) Evidence of insurability; or

(viii) Disability.

(2) Evidence of insurability includes—

(i) Conditions arising out of acts of domestic violence; and

(ii) Participation in activities such as motorcycling, snowmobiling, all-terrain vehicle riding, horseback riding, skiing, and other similar activities.

(3) The decision whether health coverage is elected for an individual (including the time chosen to enroll, such as under special enrollment or late enrollment) is not, itself, within the scope of any health factor. (However, under § 146.117, a plan or issuer must treat special enrollees the same as similarly situated individuals who are enrolled when first eligible.)

(b) *Prohibited discrimination in rules for eligibility*—(1) *In general*—(i) A group health plan, and a health insurance issuer offering health insurance coverage in connection with a group health plan, may not establish any rule for eligibility (including continued eligibility) of any individual to enroll for benefits under the terms of the plan or group health insurance coverage that discriminates based on any health factor that relates to that individual or a dependent of that individual. This rule is subject to the provisions of paragraph (b)(2) of this section (explaining how this rule applies to benefits), paragraph (b)(3) of this section (allowing plans to impose certain preexisting condition exclusions), paragraph (d) of this section (containing rules for establishing groups of similarly situated individuals), paragraph (e) of this section (relating to nonconfinement, actively-at-work, and other service requirements), paragraph

(f) of this section (relating to wellness programs), and paragraph (g) of this section (permitting favorable treatment of individuals with adverse health factors).

(ii) For purposes of this section, rules for eligibility include, but are not limited to, rules relating to—

(A) Enrollment;

(B) The effective date of coverage;

(C) Waiting (or affiliation) periods;

(D) Late and special enrollment;

(E) Eligibility for benefit packages (including rules for individuals to change their selection among benefit packages);

(F) Benefits (including rules relating to covered benefits, benefit restrictions, and cost-sharing mechanisms such as coinsurance, copayments, and deductibles), as described in paragraphs (b)(2) and (b)(3) of this section;

(G) Continued eligibility; and

(H) Terminating coverage (including disenrollment) of any individual under the plan.

(iii) The rules of this paragraph (b)(1) are illustrated by the following examples:

Example 1. (i) *Facts.* An employer sponsors a group health plan that is available to all employees who enroll within the first 30 days of their employment. However, employees who do not enroll within the first 30 days cannot enroll later unless they pass a physical examination.

(ii) *Conclusion.* In this *Example 1,* the requirement to pass a physical examination in order to enroll in the plan is a rule for eligibility that discriminates based on one or more health factors and thus violates this paragraph (b)(1).

Example 2. (i) *Facts.* Under an employer's group health plan, employees who enroll during the first 30 days of employment (and during special enrollment periods) may choose between two benefit packages: an indemnity option and an HMO option. However, employees who enroll during late enrollment are permitted to enroll only in the HMO option and only if they provide evidence of good health.

(ii) *Conclusion.* In this *Example 2,* the requirement to provide evidence of good health in order to be eligible for late enrollment in the HMO option is a rule for eligibility that discriminates based on one or more health factors and thus violates this paragraph (b)(1). However, if the plan did not require evidence of good health but limited late enrollees to the HMO option, the plan's rules for eligibility would not discriminate based on any health factor, and thus would not violate this paragraph (b)(1), because the time an individual chooses to enroll is not, itself, within the scope of any health factor.

Example 3. (i) *Facts.* Under an employer's group health plan, all employees generally may enroll within the first 30 days of employment. However, individuals who participate in certain recreational activities, including motorcycling, are excluded from coverage.

(ii) *Conclusion.* In this *Example 3,* excluding from the plan individuals who participate in recreational activities, such as motorcycling, is a rule for eligibility that discriminates based on one or more health factors and thus violates this paragraph (b)(1).

Example 4. (i) *Facts.* A group health plan applies for a group health policy offered by an issuer. As part of the application, the issuer receives health information about individuals to be covered under the plan. Individual *A* is an employee of the employer maintaining the plan. *A* and *A*'s dependents have a history of high health claims. Based on the information about *A* and *A*'s dependents, the issuer excludes *A* and *A*'s dependents from the group policy it offers to the employer.

(ii) *Conclusion.* In this *Example 4,* the issuer's exclusion of A and A's dependents from coverage is a rule for eligibility that discriminates based on one or more health factors, and thus violates this paragraph (b)(1). (If the employer is a small employer under 45 CFR 144.103 (generally, an employer with 50 or fewer employees), the issuer also may violate 45 CFR 146.150, which requires issuers to offer all the policies they sell in the small group market on a guaranteed available basis to all small employers and to accept every eligible individual in every small employer group.) If the plan provides coverage through this policy and does not provide equivalent coverage for *A* and *A*'s dependents through other means, the plan will also violate this paragraph (b)(1).

(2) *Application to benefits*—(i) *General rule*—(A) Under this section, a group health plan or group health insurance issuer is not required to provide coverage for any particular benefit to any group of similarly situated individuals.

(B) However, benefits provided under a plan or through group health insurance coverage must be uniformly available to all similarly situated individuals (as described in paragraph (d) of this section). Likewise, any restriction on a benefit or benefits must apply uniformly to all similarly situated individuals and must not be directed at individual participants or beneficiaries based on any health factor of the participants or beneficiaries (determined based on all the relevant facts and circumstances). Thus, for example, a plan or issuer may limit or exclude benefits in relation to a specific disease or condition, limit or exclude benefits for certain types of treatments or drugs, or limit or exclude benefits based on a determination of whether the benefits are experimental or not medically necessary, but only if the benefit limitation or exclusion applies uniformly to all similarly situated individuals and is not directed at individual participants or beneficiaries based on any health factor of the participants or beneficiaries. In addition, a plan or issuer may impose annual, lifetime, or other limits on benefits and may require the satisfaction of a deductible, copayment, coinsurance, or other cost-sharing requirement in order to obtain a benefit if the limit or cost-sharing requirement applies uniformly to all similarly situated individuals and is not directed at individual participants or beneficiaries based on any health factor of the participants or beneficiaries. In the case of a cost-sharing requirement, see also paragraph (b)(2)(ii) of this section, which permits variances in the application of a cost-sharing mechanism made available under a wellness program. (Whether any plan provision or practice with respect to benefits complies with this paragraph (b)(2)(i) does not affect whether the provision or practice is permitted under any other provision of ERISA, the Americans with Disabilities Act, or any other law, whether State or Federal.)

(C) For purposes of this paragraph (b)(2)(i), a plan amendment applicable to all individuals in one or more groups of similarly situated individuals under the plan and made effective no earlier than the first day of the first plan year after the amendment is adopted is not considered to be directed at any individual participants or beneficiaries.

(D) The rules of this paragraph (b)(2)(i) are illustrated by the following examples:

Example 1. (i) *Facts.* A group health plan applies a $500,000 lifetime limit on all benefits to each participant or beneficiary covered under the plan. The limit is not directed at individual participants or beneficiaries.

(ii) *Conclusion.* In this *Example 1,* the limit does not violate this paragraph (b)(2)(i) because $500,000 of benefits are available uniformly to each participant and beneficiary under the plan and because the limit is applied uniformly to all participants and beneficiaries and is not directed at individual participants or beneficiaries.

Example 2. (i) *Facts.* A group health plan has a $2 million lifetime limit on all benefits (and no other lifetime limits) for participants covered under the plan. Participant *B* files a claim for the treatment of AIDS. At the next corporate board meeting of the plan sponsor, the claim is discussed. Shortly thereafter, the plan is modified to impose a $10,000 lifetime limit on benefits for the treatment of AIDS, effective before the beginning of the next plan year.

(ii) *Conclusion.* The facts of this *Example 2* strongly suggest that the plan modification is directed at *B* based on *B*'s claim. Absent outweighing evidence to the contrary, the plan violates this paragraph (b)(2)(i).

Example 3. (i) A group health plan applies for a group health policy offered by an issuer. Individual *C* is covered under the plan and has an adverse health condition. As part of

the application, the issuer receives health information about the individuals to be covered, including information about *C*'s adverse health condition. The policy form offered by the issuer generally provides benefits for the adverse health condition that *C* has, but in this case the issuer offers the plan a policy modified by a rider that excludes benefits for *C* for that condition. The exclusionary rider is made effective the first day of the next plan year.

(ii) *Conclusion.* In this *Example 3*, the issuer violates this paragraph (b)(2)(i) because benefits for *C*'s condition are available to other individuals in the group of similarly situated individuals that includes *C* but are not available to *C*. Thus, the benefits are not uniformly available to all similarly situated individuals. Even though the exclusionary rider is made effective the first day of the next plan year, because the rider does not apply to all similarly situated individuals, the issuer violates this paragraph (b)(2)(i).

Example 4. (i) *Facts.* A group health plan has a $2,000 lifetime limit for the treatment of temporomandibular joint syndrome (TMJ). The limit is applied uniformly to all similarly situated individuals and is not directed at individual participants or beneficiaries.

(ii) *Conclusion.* In this *Example 4,* the limit does not violate this paragraph (b)(2)(i) because $2,000 of benefits for the treatment of TMJ are available uniformly to all similarly situated individuals and a plan may limit benefits covered in relation to a specific disease or condition if the limit applies uniformly to all similarly situated individuals and is not directed at individual participants or beneficiaries. (This example does not address whether the plan provision is permissible under the Americans with Disabilities Act or any other applicable law.)

Example 5. (i) *Facts.* A group health plan applies a $2 million lifetime limit on all benefits. However, the $2 million lifetime limit is reduced to $10,000 for any participant or beneficiary covered under the plan who has a congenital heart defect.

(ii) *Conclusion.* In this *Example 5,* the lower lifetime limit for participants and beneficiaries with a congenital heart defect violates this paragraph (b)(2)(i) because benefits under the plan are not uniformly available to all similarly situated individuals and the plan's lifetime limit on benefits does not apply uniformly to all similarly situated individuals.

Example 6. (i) *Facts.* A group health plan limits benefits for prescription drugs to those listed on a drug formulary. The limit is applied uniformly to all similarly situated individuals and is not directed at individual participants or beneficiaries.

(ii) *Conclusion.* In this *Example 6*, the exclusion from coverage of drugs not listed on the drug formulary does not violate this paragraph (b)(2)(i) because benefits for prescription drugs listed on the formulary are uniformly available to all similarly situated individuals and because the exclusion of drugs not listed on the formulary applies uniformly to all similarly situated individuals and is not directed at individual participants or beneficiaries.

Example 7. (i) *Facts.* Under a group health plan, doctor visits are generally subject to a $250 annual deductible and 20 percent coinsurance requirement. However, prenatal doctor visits are not subject to any deductible or coinsurance requirement. These rules are applied uniformly to all similarly situated individuals and are not directed at individual participants or beneficiaries.

(ii) *Conclusion.* In this *Example 7,* imposing different deductible and coinsurance requirements for prenatal doctor visits and other visits does not violate this paragraph (b)(2)(i) because a plan may establish different deductibles or coinsurance requirements for different services if the deductible or coinsurance requirement is applied uniformly to all similarly situated individuals and is not directed at individual participants or beneficiaries.

Example 8. (i) *Facts.* An employer sponsors a group health plan that is available to all current employees. Under the plan, the medical care expenses of each employee (and the employee's dependents) are reimbursed up to an annual maximum amount. The maximum reimbursement amount with respect to an employee for a year is $1500 multiplied by the number of years the employee has participated in the plan, reduced by the total reimbursements for prior years.

(ii) *Conclusion.* In this *Example 8,* the variable annual limit does not violate this paragraph (b)(2)(i). Although the maximum reimbursement amount for a year varies among employees within the same group of similarly situated individuals based on prior claims experience, employees who have participated in the plan for the same length of time are eligible for the same total benefit over that length of time (and the restriction on the maximum reimbursement amount is not directed at any individual participants or beneficiaries based on any health factor).

(ii) *Exception for wellness programs.* A group health plan or group health insurance issuer may vary benefits, including cost-sharing mechanisms (such as a deductible, copayment, or coinsurance), based on whether an individual has met the standards of a wellness program that satisfies the requirements of paragraph (f) of this section.

(iii) *Specific rule relating to source-of-injury exclusions*—(A) If a group health plan or group health insurance coverage generally provides benefits for a type of injury, the plan or issuer may not deny benefits otherwise provided for treatment of the injury if the injury results from an act of domestic violence or a medical condition (including both physical and mental health conditions). This rule applies in the case of an injury resulting from a medical condition even if the condition is not diagnosed before the injury.

(B) The rules of this paragraph (b)(2)(iii) are illustrated by the following examples:

Example 1. (i) *Facts.* A group health plan generally provides medical/surgical benefits, including benefits for hospital stays, that are medically necessary. However, the plan excludes benefits for self-inflicted injuries or injuries sustained in connection with attempted suicide. Because of depression, Individual D attempts suicide. As a result, *D* sustains injuries and is hospitalized for treatment of the injuries. Under the exclusion, the plan denies *D* benefits for treatment of the injuries.

(ii) *Conclusion.* In this Example 1, the suicide attempt is the result of a medical condition (depression). Accordingly, the denial of benefits for the treatments of D's injuries violates the requirements of this paragraph (b)(2)(iii) because the plan provision excludes benefits for treatment of an injury resulting from a medical condition.

Example 2. (i) *Facts.* A group health plan provides benefits for head injuries generally. The plan also has a general exclusion for any injury sustained while participating in any of a number of recreational activities, including bungee jumping. However, this exclusion does not apply to any injury that results from a medical condition (nor from domestic violence). Participant E sustains a head injury while bungee jumping. The injury did not result from a medical condition (nor from domestic violence). Accordingly, the plan denies benefits for *E*'s head injury.

(ii) *Conclusion.* In this *Example 2*, the plan provision that denies benefits based on the source of an injury does not restrict benefits based on an act of domestic violence or any medical condition. Therefore, the provision is permissible under this paragraph (b)(2)(iii) and does not violate this section. (However, if the plan did not allow E to enroll in the plan (or applied different rules for eligibility to *E*) because *E* frequently participates in bungee jumping, the plan would violate paragraph (b)(1) of this section.)

(3) *Relationship to § 146.111.* (i) A preexisting condition exclusion is permitted under this section if it —

(A) Complies with § 146.111;

(B) Applies uniformly to all similarly situated individuals (as described in paragraph (d) of this section); and

(C) Is not directed at individual participants or beneficiaries based on any health factor of the participants or beneficiaries. For purposes of this paragraph (b)(3)(i)(C), a plan amendment relating to a preexisting condition exclusion applicable to all individuals in one or more groups of similarly situated individuals under the plan and made effective no earlier than the first day of the first plan year after the amendment is adopted is not considered to be directed at any individual participants or beneficiaries.

(ii) The rules of this paragraph (b)(3) are illustrated by the following examples:

Example 1. (i) *Facts.* A group health plan imposes a preexisting condition exclusion on all individuals enrolled in the plan. The exclusion applies to conditions for which medical advice, diagnosis, care, or treatment was recommended or received within the six-

month period ending on an individual's enrollment date. In addition, the exclusion generally extends for 12 months after an individual's enrollment date, but this 12-month period is offset by the number of days of an individual's creditable coverage in accordance with § 146.111. There is nothing to indicate that the exclusion is directed at individual participants or beneficiaries.

(ii) *Conclusion.* In this *Example 1*, even though the plan's preexisting condition exclusion discriminates against individuals based on one or more health factors, the preexisting condition exclusion does not violate this section because it applies uniformly to all similarly situated individuals, is not directed at individual participants or beneficiaries, and complies with § 146.111 (that is, the requirements relating to the six-month look-back period, the 12-month (or 18-month) maximum exclusion period, and the creditable coverage offset).

Example 2. (i) *Facts.* A group health plan excludes coverage for conditions with respect to which medical advice, diagnosis, care, or treatment was recommended or received within the six-month period ending on an individual's enrollment date. Under the plan, the preexisting condition exclusion generally extends for 12 months, offset by creditable coverage. However, if an individual has no claims in the first six months following enrollment, the remainder of the exclusion period is waived.

(ii) *Conclusion.* In this *Example 2*, the plan's preexisting condition exclusions violate this section because they do not meet the requirements of this paragraph (b)(3); specifically, they do not apply uniformly to all similarly situated individuals. The plan provisions do not apply uniformly to all similarly situated individuals because individuals who have medical claims during the first six months following enrollment are not treated the same as similarly situated individuals with no claims during that period. (Under paragraph (d) of this section, the groups cannot be treated as two separate groups of similarly situated individuals because the distinction is based on a health factor.)

(c) *Prohibited discrimination in premiums or contributions*—(1) *In general*—(i) A group health plan, and a health insurance issuer offering health insurance coverage in connection with a group health plan, may not require an individual, as a condition of enrollment or continued enrollment under the plan or group health insurance coverage, to pay a premium or contribution that is greater than the premium or contribution for a similarly situated individual (described in paragraph (d) of this section) enrolled in the plan or group health insurance coverage based on any health factor that relates to the individual or a dependent of the individual.

(ii) Discounts, rebates, payments in kind, and any other premium differential mechanisms are taken into account in determining an individual's premium or contribution rate. (For rules relating to cost-sharing mechanisms, see paragraph (b)(2) of this section (addressing benefits).)

(2) *Rules relating to premium rates*—(i) *Group rating based on health factors not restricted under this section.* Nothing in this section restricts the aggregate amount that an employer may be charged for coverage under a group health plan.

(ii) *List billing based on a health factor prohibited.* However, a group health insurance issuer, or a group health plan, may not quote or charge an employer (or an individual) a different premium for an individual in a group of similarly situated individuals based on a health factor. (But see paragraph (g) of this section permitting favorable treatment of individuals with adverse health factors.)

(iii) *Examples.* The rules of this paragraph (c)(2) are illustrated by the following examples:

Example 1. (i) *Facts.* An employer sponsors a group health plan and purchases coverage from a health insurance issuer. In order to determine the premium rate for the upcoming plan year, the issuer reviews the claims experience of individuals covered under the plan. The issuer finds that Individual F had significantly higher claims experience than similarly situated individuals in the plan. The issuer quotes the plan a higher per-participant rate because of F's claims experience.

(ii) *Conclusion.* In this *Example 1*, the issuer does not violate the provisions of this paragraph (c)(2) because the issuer blends the rate so that the employer is not quoted a higher rate for *F* than for a similarly situated individual based on *F*'s claims experience.

Example 2. (i) *Facts.* Same facts as *Example 1*, except that the issuer quotes the employer a higher premium rate for *F*, because of *F*'s claims experience, than for a similarly situated individual.

(ii) *Conclusion.* In this *Example 2*, the issuer violates this paragraph (c)(2). Moreover, even if the plan purchased the policy based on the quote but did not require a higher participant contribution for *F* than for a similarly situated individual, the issuer would still violate this paragraph (c)(2) (but in such a case the plan would not violate this paragraph (c)(2)).

(3) *Exception for wellness programs.* Notwithstanding paragraphs (c)(1) and (c)(2) of this section, a plan or issuer may vary the amount of premium or contribution it requires similarly situated individuals to pay based on whether an individual has met the standards of a wellness program that satisfies the requirements of paragraph (f) of this section.

(d) *Similarly situated individuals.* The requirements of this section apply only within a group of individuals who are treated as similarly situated individuals. A plan or issuer may treat participants as a group of similarly situated individuals separate from beneficiaries. In addition, participants may be treated as two or more distinct groups of similarly situated individuals and beneficiaries may be treated as two or more distinct groups of similarly situated individuals in accordance with the rules of this paragraph (d). Moreover, if individuals have a choice of two or more benefit packages, individuals choosing one benefit package may be treated as one or more groups of similarly situated individuals distinct from individuals choosing another benefit package.

(1) *Participants.* Subject to paragraph (d)(3) of this section, a plan or issuer may treat participants as two or more distinct groups of similarly situated individuals if the distinction between or among the groups of participants is based on a bona fide employment-based classification consistent with the employer's usual business practice. Whether an employment-based classification is bona fide is determined on the basis of all the relevant facts and circumstances. Relevant facts and circumstances include whether the employer uses the classification for purposes independent of qualification for health coverage (for example, determining eligibility for other employee benefits or determining other terms of employment). Subject to paragraph (d)(3) of this section, examples of classifications that, based on all the relevant facts and circumstances, may be bona fide include full-time versus part-time status, different geographic location, membership in a collective bargaining unit, date of hire, length of service, current employee versus former employee status, and different occupations. However, a classification based on any health factor is not a bona fide employment-based classification, unless the requirements of paragraph (g) of this section are satisfied (permitting favorable treatment of individuals with adverse health factors).

(2) *Beneficiaries*—(i) Subject to paragraph (d)(3) of this section, a plan or issuer may treat beneficiaries as two or more distinct groups of similarly situated individuals if the distinction between or among the groups of beneficiaries is based on any of the following factors:

(A) A bona fide employment-based classification of the participant through whom the beneficiary is receiving coverage;

(B) Relationship to the participant (for example, as a spouse or as a dependent child);

(C) Marital status;

(D) With respect to children of a participant, age or student status; or

(E) Any other factor if the factor is not a health factor.

(ii) Paragraph (d)(2)(i) of this section does not prevent more favorable treatment of individuals with adverse health factors in accordance with paragraph (g) of this section.

(3) *Discrimination directed at individuals.* Notwithstanding paragraphs (d)(1) and (d)(2) of this section, if the creation or modification of an employment or coverage classification is directed at individual participants or beneficiaries based on any health factor of the participants or beneficiaries, the classification is not permitted under this paragraph (d), unless it is permitted under paragraph (g) of this section (permitting favorable treatment of individuals with adverse health factors). Thus, if an employer modified an employment-based classification to single out, based on a health factor, individual participants and beneficiaries and deny them health coverage, the new classification would not be permitted under this section.

(4) *Examples.* The rules of this paragraph (d) are illustrated by the following examples:

Example 1. (i) *Facts.* An employer sponsors a group health plan for full-time employees only. Under the plan (consistent with the employer's usual business practice), employees who normally work at least 30 hours per week are considered to be working full-time. Other employees are considered to be working part-time. There is no evidence to suggest that the classification is directed at individual participants or beneficiaries.

(ii) *Conclusion.* In this *Example 1*, treating the full-time and part-time employees as two separate groups of similarly situated individuals is permitted under this paragraph (d) because the classification is bona fide and is not directed at individual participants or beneficiaries.

Example 2. (i) *Facts.* Under a group health plan, coverage is made available to employees, their spouses, and their dependent children. However, coverage is made available to a dependent child only if the dependent child is under age 19 (or under age 25 if the child is continuously enrolled full-time in an institution of higher learning (full-time students)). There is no evidence to suggest that these classifications are directed at individual participants or beneficiaries.

(ii) *Conclusion.* In this *Example 2*, treating spouses and dependent children differently by imposing an age limitation on dependent children, but not on spouses, is permitted under this paragraph (d). Specifically, the distinction between spouses and dependent children is permitted under paragraph (d)(2) of this section and is not prohibited under paragraph (d)(3) of this section because it is not directed at individual participants or beneficiaries. It is also permissible to treat dependent children who are under age 19 (or full-time students under age 25) as a group of similarly situated individuals separate from those who are age 25 or older (or age 19 or older if they are not full-time students) because the classification is permitted under paragraph (d)(2) of this section and is not directed at individual participants or beneficiaries.

Example 3. (i) *Facts.* A university sponsors a group health plan that provides one health benefit package to faculty and another health benefit package to other staff. Faculty and staff are treated differently with respect to other employee benefits such as retirement benefits and leaves of absence. There is no evidence to suggest that the distinction is directed at individual participants or beneficiaries.

(ii) *Conclusion.* In this *Example 3*, the classification is permitted under this paragraph (d) because there is a distinction based on a bona fide employment-based classification consistent with the employer's usual business practice and the distinction is not directed at individual participants and beneficiaries.

Example 4. (i) *Facts.* An employer sponsors a group health plan that is available to all current employees. Former employees may also be eligible, but only if they complete a specified number of years of service, are enrolled under the plan at the time of termination of employment, and are continuously enrolled from that date. There is no evidence to suggest that these distinctions are directed at individual participants or beneficiaries.

(ii) *Conclusion.* In this *Example 4*, imposing additional eligibility requirements on former employees is permitted because a classification that distinguishes between current and former employees is a bona fide employment-based classification that is permitted under this paragraph (d), provided that it is not directed at individual participants or beneficiaries. In addition, it is permissible to distinguish between former employees who satisfy the service requirement and those who do not, provided that the distinction is not directed at individual participants or beneficiaries. (However, former employees who do not satisfy the eligibility criteria may, nonetheless, be eligible for continued coverage pursuant to a COBRA continuation provision or similar State law.)

Example 5. (i) *Facts.* An employer sponsors a group health plan that provides the same benefit package to all seven employees of the employer. Six of the seven employees have the same job title and responsibilities, but Employee *G* has a different job title and different responsibilities. After *G* files an expensive claim for benefits under the plan, coverage under the plan is modified so that employees with *G*'s job title receive a different benefit package that includes a lower lifetime dollar limit than in the benefit package made available to the other six employees.

(ii) *Conclusion.* Under the facts of this *Example 5*, changing the coverage classification for *G* based on the existing employment classification for *G* is not permitted under this paragraph (d) because the creation of the new coverage classification for *G* is directed at *G* based on one or more health factors.

(e) *Nonconfinement and actively-at-work provisions*—(1) *Nonconfinement provisions*—(i) *General rule.* Under the rules of paragraphs (b) and (c) of this section, a plan or issuer may not establish a rule for eligibility (as described in paragraph (b)(1)(ii) of this section) or set any individual's premium or contribution rate based on whether an individual is confined to a hospital or other health care institution. In addition, under the rules of paragraphs (b) and (c) of this section, a plan or issuer may not establish a rule for eligibility or set any individual's premium or contribution rate based on an individual's ability to engage in normal life activities, except to the extent permitted under paragraphs (e)(2)(ii) and (e)(3) of this section (permitting plans and issuers, under certain circumstances, to distinguish among employees based on the performance of services).

(ii) *Examples.* The rules of this paragraph (e)(1) are illustrated by the following examples:

Example 1. (i) *Facts.* Under a group health plan, coverage for employees and their dependents generally becomes effective on the first day of employment. However, coverage for a dependent who is confined to a hospital or other health care institution does not become effective until the confinement ends.

(ii) *Conclusion.* In this *Example 1*, the plan violates this paragraph (e)(1) because the plan delays the effective date of coverage for dependents based on confinement to a hospital or other health care institution.

Example 2. (i) *Facts.* In previous years, a group health plan has provided coverage through a group health insurance policy offered by Issuer *M*. However, for the current year, the plan provides coverage through a group health insurance policy offered by Issuer *N*. Under Issuer *N*'s policy, items and services provided in connection with the confinement of a dependent to a hospital or other health care institution are not covered if the confinement is covered under an extension of benefits clause from a previous health insurance issuer.

(ii) *Conclusion.* In this *Example 2*, Issuer *N* violates this paragraph (e)(1) because the group health insurance coverage restricts benefits (a rule for eligibility under paragraph (b)(1)) based on whether a dependent is confined to a hospital or other health care institution that is covered under an extension of benefits clause from a previous issuer. State law cannot change the obligation of Issuer *N* under this section. However, under State law Issuer *M* may also be responsible for providing benefits to such a dependent. In a case in which Issuer *N* has an obligation

under this section to provide benefits and Issuer *M* has an obligation under State law to provide benefits, any State laws designed to prevent more than 100% reimbursement, such as State coordination-of-benefits laws, continue to apply.

(2) *Actively-at-work and continuous service provisions*—(i) *General rule*—(A) Under the rules of paragraphs (b) and (c) of this section and subject to the exception for the first day of work described in paragraph (e)(2)(ii) of this section, a plan or issuer may not establish a rule for eligibility (as described in paragraph (b)(1)(ii) of this section) or set any individual's premium or contribution rate based on whether an individual is actively at work (including whether an individual is continuously employed), unless absence from work due to any health factor (such as being absent from work on sick leave) is treated, for purposes of the plan or health insurance coverage, as being actively at work.

(B) The rules of this paragraph (e)(2)(i) are illustrated by the following examples:

Example 1. (i) *Facts.* Under a group health plan, an employee generally becomes eligible to enroll 30 days after the first day of employment. However, if the employee is not actively at work on the first day after the end of the 30-day period, then eligibility for enrollment is delayed until the first day the employee is actively at work.

(ii) *Conclusion.* In this *Example 1*, the plan violates this paragraph (e)(2) (and thus also violates paragraph (b) of this section). However, the plan would not violate paragraph (e)(2) or (b) of this section if, under the plan, an absence due to any health factor is considered being actively at work.

Example 2. (i) *Facts.* Under a group health plan, coverage for an employee becomes effective after 90 days of continuous service; that is, if an employee is absent from work (for any reason) before completing 90 days of service, the beginning of the 90-day period is measured from the day the employee returns to work (without any credit for service before the absence).

(ii) *Conclusion.* In this *Example 2*, the plan violates this paragraph (e)(2) (and thus also paragraph (b) of this section) because the 90-day continuous service requirement is a rule for eligibility based on whether an individual is actively at work. However, the plan would not violate this paragraph (e)(2) or paragraph (b) of this section if, under the plan, an absence due to any health factor is not considered an absence for purposes of measuring 90 days of continuous service.

(ii) *Exception for the first day of work*—(A) Notwithstanding the general rule in paragraph (e)(2)(i) of this section, a plan or issuer may establish a rule for eligibility that requires an individual to begin work for the employer sponsoring the plan (or, in the case of a multiemployer plan, to begin a job in covered employment) before coverage becomes effective, provided that such a rule for eligibility applies regardless of the reason for the absence.

(B) The rules of this paragraph (e)(2)(ii) are illustrated by the following examples:

Example 1. (i) *Facts.* Under the eligibility provision of a group health plan, coverage for new employees becomes effective on the first day that the employee reports to work. Individual *H* is scheduled to begin work on August 3. However, *H* is unable to begin work on that day because of illness. *H* begins working on August 4, and *H*'s coverage is effective on August 4.

(ii) *Conclusion.* In this *Example 1*, the plan provision does not violate this section. However, if coverage for individuals who do not report to work on the first day they were scheduled to work for a reason unrelated to a health factor (such as vacation or bereavement) becomes effective on the first day they were scheduled to work, then the plan would violate this section.

Example 2. (i) *Facts.* Under a group health plan, coverage for new employees becomes effective on the first day of the month following the employee's first day of work, regardless of whether the employee is actively at work on the first day of the month. Individual *J* is scheduled to begin work on March 24. However, *J* is unable to begin work on March 24 because of illness. *J* begins working on April 7 and *J*'s coverage is effective May 1.

(ii) *Conclusion.* In this *Example 2*, the plan provision does not violate this section. However, as in *Example 1*, if coverage for individuals absent from work for reasons unrelated to a health factor became effective despite their absence, then the plan would violate this section.

(3) *Relationship to plan provisions defining similarly situated individuals*—(i) Notwithstanding the rules of paragraphs (e)(1) and (e)(2) of this section, a plan or issuer may establish rules for eligibility or set any individual's premium or contribution rate in accordance with the rules relating to similarly situated individuals in paragraph (d) of this section. Accordingly, a plan or issuer may distinguish in rules for eligibility under the plan between full-time and part-time employees, between permanent and temporary or seasonal employees, between current and former employees, and between employees currently performing services and employees no longer performing services for the employer, subject to paragraph (d) of this section. However, other Federal or State laws (including the COBRA continuation provisions and the Family and Medical Leave Act of 1993) may require an employee or the employee's dependents to be offered coverage and set limits on the premium or contribution rate even though the employee is not performing services.

(ii) The rules of this paragraph (e)(3) are illustrated by the following examples:

Example 1. (i) *Facts.* Under a group health plan, employees are eligible for coverage if they perform services for the employer for 30 or more hours per week or if they are on paid leave (such as vacation, sick, or bereavement leave). Employees on unpaid leave are treated as a separate group of similarly situated individuals in accordance with the rules of paragraph (d) of this section.

(ii) *Conclusion.* In this *Example 1*, the plan provisions do not violate this section. However, if the plan treated individuals performing services for the employer for 30 or more hours per week, individuals on vacation leave, and individuals on bereavement leave as a group of similarly situated individuals separate from individuals on sick leave, the plan would violate this paragraph (e) (and thus also would violate paragraph (b) of this section) because groups of similarly situated individuals cannot be established based on a health factor (including the taking of sick leave) under paragraph (d) of this section.

Example 2. (i) *Facts.* To be eligible for coverage under a bona fide collectively bargained group health plan in the current calendar quarter, the plan requires an individual to have worked 250 hours in covered employment during the three-month period that ends one month before the beginning of the current calendar quarter. The distinction between employees working at least 250 hours and those working less than 250 hours in the earlier three-month period is not directed at individual participants or beneficiaries based on any health factor of the participants or beneficiaries.

(ii) *Conclusion.* In this *Example 2*, the plan provision does not violate this section because, under the rules for similarly situated individuals allowing full-time employees to be treated differently than part-time employees, employees who work at least 250 hours in a three-month period can be treated differently than employees who fail to work 250 hours in that period. The result would be the same if the plan permitted individuals to apply excess hours from previous periods to satisfy the requirement for the current quarter.

Example 3. (i) *Facts.* Under a group health plan, coverage of an employee is terminated when the individual's employment is terminated, in accordance with the rules of paragraph (d) of this section. Employee *B* has been covered under the plan. *B* experiences a disabling illness that prevents *B* from working. *B* takes a leave of absence under the Family and Medical Leave Act of 1993. At the end of such leave, *B* terminates employment and consequently loses coverage under the plan. (This termination of coverage is without regard to whatever rights the employee (or members of the employee's family) may have for COBRA continuation coverage.)

(ii) *Conclusion.* In this *Example 3*, the plan provision terminating *B*'s coverage upon *B*'s termination of employment does not violate this section.

Example 4. (i) *Facts.* Under a group health plan, coverage of an employee is terminated when the employee ceases to perform services for the employer sponsoring the plan, in accordance with the rules of paragraph (d) of this section. Employee *C* is laid off for three months. When the layoff begins, *C*'s coverage under the plan is terminated. (This termination of coverage is without regard to whatever rights the employee (or members of the employee's family) may have for COBRA continuation coverage.)

(ii) *Conclusion.* In this *Example 4*, the plan provision terminating *C*'s coverage upon the cessation of *C*'s performance of services does not violate this section.

(f) *Wellness programs.* A wellness program is any program designed to promote health or prevent disease. Paragraphs (b)(2)(ii) and (c)(3) of this section provide exceptions to the general prohibitions against discrimination based on a health factor for plan provisions that vary benefits (including cost-sharing mechanisms) or the premium or contribution for similarly situated individuals in connection with a wellness program that satisfies the requirements of this paragraph (f). If none of the conditions for obtaining a reward under a wellness program is based on an individual satisfying a standard that is related to a health factor, paragraph (f)(1) of this section clarifies that the wellness program does not violate this section if participation in the program is made available to all similarly situated individuals. If any of the conditions for obtaining a reward under a wellness program is based on an individual satisfying a standard that is related to a health factor, the wellness program does not violate this section if the requirements of paragraph (f)(2) of this section are met.

(1) *Wellness programs not subject to requirements.* If none of the conditions for obtaining a reward under a wellness program are based on an individual satisfying a standard that is related to a health factor (or if a wellness program does not provide a reward), the wellness program does not violate this section, if participation in the program is made available to all similarly situated individuals. Thus, for example, the following programs need not satisfy the requirements of paragraph (f)(2) of this section, if participation in the program is made available to all similarly situated individuals:

(i) A program that reimburses all or part of the cost for memberships in a fitness center.

(ii) A diagnostic testing program that provides a reward for participation and does not base any part of the reward on outcomes.

(iii) A program that encourages preventive care through the waiver of the copayment or deductible requirement under a group health plan for the costs of, for example, prenatal care or well-baby visits.

(iv) A program that reimburses employees for the costs of smoking cessation programs without regard to whether the employee quits smoking.

(v) A program that provides a reward to employees for attending a monthly health education seminar.

(2) *Wellness programs subject to requirements.* If any of the conditions for obtaining a reward under a wellness program is based on an individual satisfying a standard that is related to a health factor, the wellness program does not violate this section if the requirements of this paragraph (f)(2) are met.

(i) The reward for the wellness program, coupled with the reward for other wellness programs with respect to the plan that require satisfaction of a standard related to a health factor, must not exceed 20 percent of the cost of employee-only coverage under the plan. However, if, in addition to employees, any class of dependents (such as spouses or spouses and dependent children) may participate in the wellness program, the reward must not exceed 20 percent of the cost of the coverage in which an employee and any dependents are enrolled. For purposes of this paragraph (f)(2), the cost of coverage is determined based on the total amount of employer and employee contributions for the benefit package under which the employee is (or the employee and any dependents are) receiving coverage. A reward can be in the form of a discount or rebate of a premium or contribution, a waiver of all or part of a cost-sharing mechanism (such as deductibles, copayments, or coinsurance), the absence of a surcharge, or the value of a benefit that would otherwise not be provided under the plan.

(ii) The program must be reasonably designed to promote health or prevent disease. A program satisfies this standard if it has a reasonable chance of improving the health of or preventing disease in participating individuals and it is not overly burdensome, is not a subterfuge for discriminating based on a health factor, and is not highly suspect in the method chosen to promote health or prevent disease.

(iii) The program must give individuals eligible for the program the opportunity to qualify for the reward under the program at least once per year.

(iv) The reward under the program must be available to all similarly situated individuals. (A) A reward is not available to all similarly situated individuals for a period unless the program allows —

(1) A reasonable alternative standard (or waiver of the otherwise applicable standard) for obtaining the reward for any individual for whom, for that period, it is unreasonably difficult due to a medical condition to satisfy the otherwise applicable standard; and

(2) A reasonable alternative standard (or waiver of the otherwise applicable standard) for obtaining the reward for any individual for whom, for that period, it is medically inadvisable to attempt to satisfy the otherwise applicable standard.

(B) A plan or issuer may seek verification, such as a statement from an individual's physician, that a health factor makes it unreasonably difficult or medically inadvisable for the individual to satisfy or attempt to satisfy the otherwise applicable standard.

(v)(A) The plan or issuer must disclose in all plan materials describing the terms of the program the availability of a reasonable alternative standard (or the possibility of waiver of the otherwise applicable standard) required under paragraph (f)(2)(iv) of this section. However, if plan materials merely mention that a program is available, without describing its terms, this disclosure is not required.

(B) The following language, or substantially similar language, can be used to satisfy the requirement of this paragraph (f)(2)(v): ''If it is unreasonably difficult due to a medical condition for you to achieve the standards for the reward under this program, or if it is medically inadvisable for you to attempt to achieve the standards for the reward under this program, call us at [insert telephone number] and we will work with you to develop another way to qualify for the reward.'' In addition, other examples of language that would satisfy this requirement are set forth in Examples 3, 4, and 5 of paragraph (f)(3) of this section.

(3) *Examples.* The rules of paragraph (f)(2) of this section are illustrated by the following examples:

Example 1. (i) *Facts.* An employer sponsors a group health plan. The annual premium for employee-only coverage is $3,600 (of which the employer pays $2,700 per year and the employee pays $900 per year). The annual premium for family coverage is $9,000 (of which the employer pays $4,500 per year and the employee pays $4,500 per year). The plan

offers a wellness program with an annual premium rebate of $360. The program is available only to employees.

(ii) *Conclusion.* In this *Example 1*, the program satisfies the requirements of paragraph (f)(2)(i) of this section because the reward for the wellness program, $360, does not exceed 20 percent of the total annual cost of employee-only coverage, $720. ($3,600 × 20% = $720.) If any class of dependents is allowed to participate in the program and the employee is enrolled in family coverage, the plan could offer the employee a reward of up to 20 percent of the cost of family coverage, $1,800. ($9,000 × 20% = $1,800.)

Example 2. (i) *Facts.* A group health plan gives an annual premium discount of 20 percent of the cost of employee-only coverage to participants who adhere to a wellness program. The wellness program consists solely of giving an annual cholesterol test to participants. Those participants who achieve a count under 200 receive the premium discount for the year.

(ii) *Conclusion.* In this *Example 2*,the program fails to satisfy the requirement of being available to all similarly situated individuals because some participants may be unable to achieve a cholesterol count of under 200 and the plan does not make available a reasonable alternative standard or waive the cholesterol standard. (In addition, plan materials describing the program are required to disclose the availability of a reasonable alternative standard (or the possibility of waiver of the otherwise applicable standard) for obtaining the premium discount. Thus, the premium discount violates paragraph (c) of this section because it may require an individual to pay a higher premium based on a health factor of the individual than is required of a similarly situated individual under the plan.

Example 3. (i) *Facts.* Same facts as *Example 2*, except that the plan provides that if it is unreasonably difficult due to a medical condition for a participant to achieve the targeted cholesterol count (or if it is medically inadvisable for a participant to attempt to achieve the targeted cholesterol count) within a 60-day period, the plan will make available a reasonable alternative standard that takes the relevant medical condition into account. In addition, all plan materials describing the terms of the program include the following statement: ''If it is unreasonably difficult due to a medical condition for you to achieve a cholesterol count under 200, or if it is medically inadvisable for you to attempt to achieve a count under 200, call us at the number below and we will work with you to develop another way to get the discount.'' Individual *D* begins a diet and exercise program but is unable to achieve a cholesterol count under 200 within the prescribed period. D's doctor determines D requires prescription medication to achieve a medically advisable cholesterol count. In addition, the doctor determines that D must be monitored through periodic blood tests to continually reevaluate D's health status. The plan accommodates *D* by making the discount available to *D*, but only if *D* follows the advice of D's doctor regarding medication and blood tests.

(ii) *Conclusion.* In this *Example 3*, the program is a wellness program because it satisfies the five requirements of paragraph (f)(2) of this section. First, the program complies with the limits on rewards under a program. Second, it is reasonably designed to promote health or prevent disease. Third, individuals eligible for the program are given the opportunity to qualify for the reward at least once per year. Fourth, the reward under the program is available to all similarly situated individuals because it accommodates individuals for whom it is unreasonably difficult due to a medical condition to achieve the targeted count (or for whom it is medically inadvisable to attempt to achieve the targeted count) in the prescribed period by providing a reasonable alternative standard. Fifth, the plan discloses in all materials describing the terms of the program the availability of a reasonable alternative standard. Thus, the premium discount does not violate this section.

Example 4. (i) *Facts.* A group health plan will waive the $250 annual deductible (which is less than 20 percent of the annual cost of employee-only coverage under the plan) for the following year for participants who have a body mass index between 19 and 26, determined shortly before the beginning of the year. However, any participant for whom it is unreasonably difficult due to a medical condition to attain this standard (and any participant for whom it is medically inadvisable to attempt to achieve this standard) during the plan year is given the same discount if the participant walks for 20 minutes three days a week. Any participant for whom it is unreasonably difficult due to a medical condition to attain either standard (and any participant for whom it is medically inadvisable to attempt to achieve either standard) during the year is given the same discount if the individual satisfies an alternative standard that is reasonable in the burden it imposes and is reasonable taking into consideration the individual's medical situation. All plan materials describing the terms of the wellness program include the following statement: ''If it is unreasonably difficult due to a medical condition for you to achieve a body mass index between 19 and 26 (or if it is medically inadvisable for you to attempt to achieve this body mass index) this year, your deductible will be waived if you walk for 20 minutes three days a week. If you cannot follow the walking program, call us at the number above and we will work with you to develop another way to have your deductible waived.'' Due to a medical condition, Individual E is unable to achieve a BMI of between 19 and 26 and is also unable to follow the walking program. *E* proposes a program based on the recommendations of *E*'s physician. The plan agrees to make the discount available to *E* if *E* follows the physician's recommendations.

(ii) *Conclusion.* In this *Example 4*, the program satisfies the five requirements of paragraph (f)(2) of this section. First, the program complies with the limits on rewards under a program. Second, it is reasonably designed to promote health or prevent disease. Third, individuals eligible for the program are given the opportunity to qualify for the reward at least once per year. Fourth, the reward under the program is available to all similarly situated individuals because it generally accommodates individuals for whom it is unreasonably difficult due to a medical condition to achieve (or for whom it is medically inadvisable to attempt to achieve) the targeted body mass index by providing a reasonable alternative standard (walking) and it accommodates individuals for whom it is unreasonably difficult due to a medical condition (or for whom it is medically inadvisable to attempt) to walk by providing an alternative standard that is reasonable for the individual. Fifth, the plan discloses in all materials describing the terms of the program the availability of a reasonable alternative standard for every individual. Thus, the waiver of the deductible does not violate this section.

Example 5. (i) *Facts.* In conjunction with an annual open enrollment period, a group health plan provides a form for participants to certify that they have not used tobacco products in the preceding twelve months. Participants who do not provide the certification are assessed a surcharge that is 20 percent of the cost of employee-only coverage. However, all plan materials describing the terms of the wellness program include the following statement: ''If it is unreasonably difficult due to a health factor for you to meet the requirements under this program (or if it is medically inadvisable for you to attempt to meet the requirements of this program), we will make available a reasonable alternative standard for you to avoid this surcharge.'' It is unreasonably difficult for Individual *F* to stop smoking cigarettes due to an addiction to nicotine (a medical condition). The plan accommodates *F* by requiring *F* to participate in a smoking cessation program to avoid the surcharge. *F* can avoid the surcharge for as long as *F* participates in the program, regardless of whether *F* stops smoking (as long as *F* continues to be addicted to nicotine).

(ii) *Conclusion.* In this *Example 5*, the premium surcharge is permissible as a wellness program because it satisfies the five requirements of paragraph (f)(2) of this section. First, the program complies with the limits on rewards under a program. Second, it is reasonably designed to promote health or prevent disease. Third, individuals eligible for the program are given the opportunity to qualify for the reward at least once per year. Fourth, the reward under the program is available to all similarly situated individuals because it accommodates individuals for whom it is unreasonably difficult due to a medical condition (or for whom it is medically inadvisable to attempt) to quit using tobacco products by providing a reasonable alternative standard. Fifth, the plan discloses in all materials describing the terms of the program the availability of a reasonable alternative standard. Thus, the premium surcharge does not violate this section.

Example 6. (i) *Facts.* Same facts as *Example 5*, except the plan accommodates *F* by requiring *F* to view, over a period of 12 months, a 12-hour video series on health problems associated with tobacco use. *F* can avoid the surcharge by complying with this requirement.

(ii) *Conclusion.* In this *Example 6,* the requirement to watch the series of video

tapes is a reasonable alternative method for avoiding the surcharge.

(g) *More favorable treatment of individuals with adverse health factors permitted*—(1) In rules for eligibility—(i) Nothing in this section prevents a group health plan or group health insurance issuer from establishing more favorable rules for eligibility (described in paragraph (b)(1) of this section) for individuals with an adverse health factor, such as disability, than for individuals without the adverse health factor. Moreover, nothing in this section prevents a plan or issuer from charging a higher premium or contribution with respect to individuals with an adverse health factor if they would not be eligible for the coverage were it not for the adverse health factor. (However, other laws, including State insurance laws, may set or limit premium rates; these laws are not affected by this section.)

(ii) The rules of this paragraph (g)(1) are illustrated by the following examples:

Example 1. (i) *Facts.* An employer sponsors a group health plan that generally is available to employees, spouses of employees, and dependent children until age 23. However, dependent children who are disabled are eligible for coverage beyond age 23.

(ii) *Conclusion.* In this *Example 1*, the plan provision allowing coverage for disabled dependent children beyond age 23 satisfies this paragraph (g)(1) (and thus does not violate this section).

Example 2. (i) *Facts.* An employer sponsors a group health plan, which is generally available to employees (and members of the employee's family) until the last day of the month in which the employee ceases to perform services for the employer. The plan generally charges employees $50 per month for employee-only coverage and $125 per month for family coverage. However, an employee who ceases to perform services for the employer by reason of disability may remain covered under the plan until the last day of the month that is 12 months after the month in which the employee ceased to perform services for the employer. During this extended period of coverage, the plan charges the employee $100 per month for employee-only coverage and $250 per month for family coverage. (This extended period of coverage is without regard to whatever rights the employee (or members of the employee's family) may have for COBRA continuation coverage.)

(ii) *Conclusion.* In this *Example 2*, the plan provision allowing extended coverage for disabled employees and their families satisfies this paragraph (g)(1) (and thus does not violate this section). In addition, the plan is permitted, under this paragraph (g)(1), to charge the disabled employees a higher premium during the extended period of coverage.

Example 3. (i) *Facts.* To comply with the requirements of a COBRA continuation provision, a group health plan generally makes COBRA continuation coverage available for a maximum period of 18 months in connection with a termination of employment but makes the coverage available for a maximum period of 29 months to certain disabled individuals and certain members of the disabled individual's family. Although the plan generally requires payment of 102 percent of the applicable premium for the first 18 months of COBRA continuation coverage, the plan requires payment of 150 percent of the applicable premium for the disabled individual's COBRA continuation coverage during the disability extension if the disabled individual would not be entitled to COBRA continuation coverage but for the disability.

(ii) *Conclusion.* In this *Example 3*, the plan provision allowing extended COBRA continuation coverage for disabled individuals satisfies this paragraph (g)(1) (and thus does not violate this section). In addition, the plan is permitted, under this paragraph (g)(1), to charge the disabled individuals a higher premium for the extended coverage if the individuals would not be eligible for COBRA continuation coverage were it not for the disability. (Similarly, if the plan provided an extended period of coverage for disabled individuals pursuant to State law or plan provision rather than pursuant to a COBRA continuation coverage provision, the plan could likewise charge the disabled individuals a higher premium for the extended coverage.)

(2) *In premiums or contributions*—(i) Nothing in this section prevents a group health plan or group health insurance issuer from charging individuals a premium or contribution that is less than the premium (or contribution) for similarly situated individuals if the lower charge is based on an adverse health factor, such as disability.

(ii) The rules of this paragraph (g)(2) are illustrated by the following example:

Example. (i) *Facts.* Under a group health plan, employees are generally required to pay $50 per month for employee-only coverage and $125 per month for family coverage under the plan. However, employees who are disabled receive coverage (whether employee-only or family coverage) under the plan free of charge.

(ii) *Conclusion.* In this *Example*, the plan provision waiving premium payment for disabled employees is permitted under this paragraph (g)(2) (and thus does not violate this section).

(h) *No effect on other laws.* Compliance with this section is not determinative of compliance with any other provision of the PHS Act (including the COBRA continuation provisions) or any other State or Federal law, such as the Americans with Disabilities Act. Therefore, although the rules of this section would not prohibit a plan or issuer from treating one group of similarly situated individuals differently from another (such as providing different benefit packages to current and former employees), other Federal or State laws may require that two separate groups of similarly situated individuals be treated the same for certain purposes (such as making the same benefit package available to COBRA qualified beneficiaries as is made available to active employees). In addition, although this section generally does not impose new disclosure obligations on plans and issuers, this section does not affect any other laws, including those that require accurate disclosures and prohibit intentional misrepresentation.

(i) *Applicability dates.* (1) *Generally.* This section applies for plan years beginning on or after July 1, 2007.

(2) *Special rule for self-funded nonfederal governmental plans exempted under 45 CFR 146.180*—(i) If coverage has been denied to any individual because the sponsor of a self-funded nonfederal governmental plan has elected under § 146.180 to exempt the plan from the requirements of this section, and the plan sponsor subsequently chooses to bring the plan into compliance with the requirements of this section, the plan—

(A) Must notify the individual that the plan will be coming into compliance with the requirements of this section, specify the effective date of compliance, and inform the individual regarding any enrollment restrictions that may apply under the terms of the plan once the plan is in compliance with this section (as a matter of administrative convenience, the notice may be disseminated to all employees);

(B) Must give the individual an opportunity to enroll that continues for at least 30 days;

(C) Must permit coverage to be effective as of the first day of plan coverage for which an exemption election under § 146.180 of this part (with regard to this section) is no longer in effect; and

(D) May not treat the individual as a late enrollee or a special enrollee.

(ii) For purposes of this paragraph (i)(2), an individual is considered to have been denied coverage if the individual failed to apply for coverage because, given an exemption election under § 146.180 of this part, it was reasonable to believe that an application for coverage would have been denied based on a health factor.

(iii) The rules of this paragraph (i)(2) are illustrated by the following examples:

Example 1. (i) *Facts.* Individual *D* was hired by a nonfederal governmental employer in June 1999. The employer maintains a self-funded group health plan with a plan year beginning on October 1. The plan sponsor

elected under § 146.180 of this part to exempt the plan from the requirements of this section for the plan year beginning October 1, 2005, and renewed the exemption election for the plan year beginning October 1, 2006. Under the terms of the plan while the exemption was in effect, employees and their dependents were allowed to enroll when the employee was first hired without regard to any health factor. If an individual declines to enroll when first eligible, the individual could enroll effective October 1 of any plan year if the individual could pass a physical examination. The evidence-of-good-health requirement for late enrollees, absent an exemption election under § 146.180 of this part, would have been in violation of this section. *D* chose not to enroll for coverage when first hired. In February of 2006, *D* was treated for skin cancer but did not apply for coverage under the plan for the plan year beginning October 1, 2006, because *D* assumed *D* could not meet the evidence-of-good-health requirement. With the plan year beginning October 1, 2007 the plan sponsor chose not to renew its exemption election and brought the plan into compliance with this section. The plan notifies individual *D* (and all other employees) that it will be coming into compliance with the requirements of this section. The notice specifies that the effective date of compliance will be October 1, 2007, explains the applicable enrollment restrictions that will apply under the plan, states that individuals will have at least 30 days to enroll, and explains that coverage for those who choose to enroll will be effective as of October 1, 2007. Individual *D* timely requests enrollment in the plan, and coverage commences under the plan on October 1, 2007.

(ii) *Conclusion*. In this *Example 1*, the plan complies with this paragraph (i)(2).

Example 2. (i) *Facts*. Individual *E* was hired by a nonfederal governmental employer in February 1999. The employer maintains a self-funded group health plan with a plan year beginning on September 1. The plan sponsor elected under § 146.180 of this part to exempt the plan from the requirements of this section and ''§ 146.111 (limitations on preexisting condition exclusion periods) for the plan year beginning September 1, 2002, and renews the exemption election for the plan years beginning September 1, 2003, September 1, 2004, September 1, 2005, and September 1, 2006. Under the terms of the plan while the exemption was in effect, employees and their dependents were allowed to enroll when the employee was first hired without regard to any health factor. If an individual declined to enroll when first eligible, the individual could enroll effective September 1 of any plan year if the individual could pass a physical examination. Also under the terms of the plan, all enrollees were subject to a 12-month preexisting condition exclusion period, regardless of whether they had creditable coverage. *E* chose not to enroll for coverage when first hired. In June of 2006, *E* is diagnosed as having multiple sclerosis (MS). With the plan year beginning September 1, 2007, the plan sponsor chooses to bring the plan into compliance with this section, but renews its exemption election with regard to limitations on preexisting condition exclusion periods. The plan notifies *E* of her opportunity to enroll, without a physical examination, effective September 1, 2007. The plan gives *E* 30 days to enroll. *E* is subject to a 12-month preexisting condition exclusion period with respect to any treatment *E* receives that is related to *E*'s MS, without regard to any prior creditable coverage *E* may have. Beginning September 1, 2008, the plan will cover treatment of *E*'s MS.

(ii) *Conclusion*. In this *Example 2*, the plan complies with the requirements of this section. (The plan is not required to comply with the requirements of § 146.111 because the plan continues to be exempted from those requirements in accordance with the plan sponsor's election under § 146.180.)

Editorial Note: This document was received at the Office of the Federal Register on December 1, 2006.

Dated: July 16, 2004.

Mark B. McClellan,

Administrator, Centers for Medicare & Medicaid Services.

Dated: November 28, 2005.

Michael O. Leavitt,

Secretary, Department of Health and Human Services.

[FR Doc. 06–9557 Filed 12–12–06; 8:45 am]

BILLING CODE 4830–01–P; 4510–29–P; 4120–01–P

DEPARTMENT OF THE TREASURY

Internal Revenue Service

26 CFR Part 54

[TD 9299]

RIN 1545–AY33

Exception to the HIPAA Nondiscrimination Requirements for Certain Grandfathered Church Plans

AGENCY: Internal Revenue Service (IRS), Treasury.

ACTION: Final regulations.

SUMMARY: This document contains final regulations that provide guidance under section 9802(c) of the Internal Revenue Code relating to the exception for certain grandfathered church plans from the nondiscrimination requirements applicable to group health plans under section 9802(a) and (b). Final regulations relating to the nondiscrimination requirements under section 9802(a) and (b) are being published elsewhere in this issue of the **Federal Register**. The regulations will generally affect sponsors of and participants in certain self-funded church plans that are group health plans, and the regulations provide plan sponsors and plan administrators with guidance necessary to comply with the law.

DATES: *Effective Date:* These regulations are effective February 12, 2007.

Applicability Date: These regulations apply for plan years beginning on or after July 1, 2007.

FOR FURTHER INFORMATION CONTACT: Russ Weinheimer at 202–622–6080 (not a toll-free number).

SUPPLEMENTARY INFORMATION:

Background

This document contains amendments to the Miscellaneous Excise Tax Regulations (26 CFR part 54) relating to the exception for certain grandfathered church plans from the nondiscrimination requirements applicable to group health plans. The nondiscrimination requirements applicable to group health plans were added to the Internal Revenue Code (Code), in section 9802, by the Health Insurance Portability and Accountability Act of 1996 (HIPAA), Public Law 104–191 (110 Stat. 1936). HIPAA also added similar nondiscrimination provisions applicable to group health plans and health insurance issuers (such as health insurance companies and health maintenance organizations) under the Employee Retirement Income Security Act of 1974 (ERISA), administered by the U.S. Department of Labor, and the Public Health Service Act (PHS Act), administered by the U.S. Department of Health and Human Services.

Final regulations relating to the HIPAA nondiscrimination requirements in paragraphs (a) and (b) of section 9802 of the Code are being published elsewhere in this issue of the **Federal Register**. Those regulations are similar to, and have been developed in coordination with, final regulations also being published today by the Departments of Labor and of Health and Human Services. Guidance under the HIPAA nondiscrimination requirements is summarized in a joint preamble to the final regulations.

The exception for certain grandfathered church plans was added to section 9802, in subsection (c), by section 1532 of the Taxpayer Relief Act of 1997, Public Law 105–34 (111 Stat. 788). A notice of proposed rulemaking on the exception for certain grandfathered church plans and a request for comments (REG–114083–00) was published in the **Federal Register** of January 8, 2001. Two written comments were received. After consideration of the comments, the proposed regulations are adopted as amended by this Treasury decision.

Explanation and Summary of Comments

One comment was pleased with the guidance in the proposed rules and asked that they be published as final rules as soon as possible. The other comment explained why the statute needed this exception and suggested that the proposed regulations did nothing more than paraphrase the statute. Neither comment asked for any change in the proposed regulations.

These final regulations make no significant substantive change to the proposed regulations. An effective date has been supplied and references to the supplanted temporary regulations have been deleted, but otherwise no change has been made in the final regulations.

Special Analyses

It has been determined that this Treasury decision is not a significant regulatory action as defined in Executive Order 12866. Therefore, a regulatory assessment is not required. It also has been determined that section 553(b) of the Administrative Procedure Act (5 U.S.C. chapter 5) does not apply to these regulations, and because the regulations do not impose a collection of information requirement on small entities, the Regulatory Flexibility Act (5 U.S.C. chapter 6) does not apply. Therefore, a Regulatory Flexibility Analysis is not required. Pursuant to section 7805(f) of the Code, the notice of proposed rulemaking preceding these regulations was submitted to the Small Business Administration for comment on its impact on small business.

Drafting Information

The principal author of these regulations is Russ Weinheimer, Office of the Operating Division Counsel/ Associate Chief Counsel (Tax Exempt and Government Entities). However, other personnel from the IRS and Treasury Department participated in their development.

List of Subjects in 26 CFR Part 54

Excise taxes, Health care, Health insurance, Pensions, Reporting and recordkeeping requirements.

Adoption of Amendments to the Regulations

■ Accordingly, 26 CFR part 54 is amended as follows:

PART 54—PENSION EXCISE TAXES

■ **Paragraph 1.** The authority citation for part 54 is amended by adding an entry in numerical order to read, in part, as follows:

Authority: 26 U.S.C. 7805 * * *

Section 54.9802–2 also issued under 26 U.S.C. 9833. * * *

■ **Par. 2.** In § 54.9801–1, paragraph (a) is revised to read as follows:

§ 54.9801–1 Basis and scope.

(a) *Statutory basis.* Sections 54.9801–1 through 54.9801–6, 54.9802–1, 54.9802–2, 54.9811–1T, 54.9812–1T, 54.9831–1, and 54.9833–1 (portability sections) implement Chapter 100 of Subtitle K of the Internal Revenue Code of 1986.

* * * * *

■ **Par. 3.** In § 54.9801–2, the introductory text is revised to read as follows:

§ 54.9801–2 Definitions.

Unless otherwise provided, the definitions in this section govern in applying the provisions of §§ 54.9801–1 through 54.9801–6, 54.9802–1, 54.9802–2, 54.9811–1T, 54.9812–1T, 54.9831–1, and 54.9833–1.

* * * * *

■ **Par. 4.** Section 54.9802–2 is added to read as follows:

§ 54.9802–2 Special rules for certain church plans.

(a) *Exception for certain church plans*—(1) *Church plans in general.* A church plan described in paragraph (b) of this section is not treated as failing to meet the requirements of section 9802 or § 54.9802–1 solely because the plan requires evidence of good health for coverage of individuals under plan provisions described in paragraph (b)(2) or (3) of this section.

(2) *Health insurance issuers.* See sections 2702 and 2721(b)(1)(B) of the Public Health Service Act (42 U.S.C. 300gg–2 and 300gg–21(b)(1)(B)) and 45 CFR 146.121, which require health insurance issuers providing health insurance coverage under a church plan that is a group health plan to comply with nondiscrimination requirements similar to those that church plans are required to comply with under section 9802 and § 54.9802–1 except that those nondiscrimination requirements do not include an exception for health insurance issuers comparable to the exception for church plans under section 9802(c) and this section.

(b) *Church plans to which this section applies*—(1) *Church plans with certain coverage provisions in effect on July 15, 1997.* This section applies to any church plan (as defined in section 414(e)) for a plan year if, on July 15, 1997 and at all times thereafter before the beginning of the plan year, the plan contains either the provisions described in paragraph (b)(2) of this section or the provisions described in paragraph (b)(3) of this section.

(2) *Plan provisions applicable to individuals employed by employers of 10 or fewer employees and self-employed individuals.* (i) A plan contains the provisions described in this paragraph (b)(2) if it requires evidence of good health of both—

(A) Any employee of an employer of 10 or fewer employees (determined without regard to section 414(e)(3)(C), under which a church or convention or association of churches is treated as the employer); and

(B) Any self-employed individual.

(ii) A plan does not contain the provisions described in this paragraph (b)(2) if the plan contains only one of the provisions described in this paragraph (b)(2). Thus, for example, a plan that requires evidence of good health of any self-employed individual, but not of any employee of an employer with 10 or fewer employees, does not contain the provisions described in this paragraph (b)(2). Moreover, a plan does not contain the provision described in paragraph (b)(2)(i)(A) of this section if the plan requires evidence of good health of any employee of an employer of fewer than 10 (or greater than 10) employees. Thus, for example, a plan does not contain the provision described in paragraph (b)(2)(i)(A) of this section if the plan requires evidence of good health of any employee of an employer with five or fewer employees.

(3) *Plan provisions applicable to individuals who enroll after the first 90 days of initial eligibility.* (i) A plan contains the provisions described in this paragraph (b)(3) if it requires evidence of good health of any individual who enrolls after the first 90 days of initial eligibility under the plan.

(ii) A plan does not contain the provisions described in this paragraph (b)(3) if it provides for a longer (or shorter) period than 90 days. Thus, for example, a plan requiring evidence of good health of any individual who enrolls after the first 120 days of initial eligibility under the plan does not contain the provisions described in this paragraph (b)(3).

(c) *Examples.* The rules of this section are illustrated by the following examples:

Example 1. (i) *Facts.* A church organization maintains two church plans for entities affiliated with the church. One plan is a group health plan that provides health coverage to all employees (including ministers and lay workers) of any affiliated church entity that has more than 10 employees. The other plan is Plan *O*, which is a group health plan that is not funded through insurance coverage and that provides

health coverage to any employee (including ministers and lay workers) of any affiliated church entity that has 10 or fewer employees and any self-employed individual affiliated with the church (including a self-employed minister of the church). Plan *O* requires evidence of good health in order for any individual of a church entity that has 10 or fewer employees to be covered and in order for any self-employed individual to be covered. On July 15, 1997 and at all times thereafter before the beginning of the plan year, Plan *O* has contained all the preceding provisions.

(ii) *Conclusion.* In this *Example 1,* because Plan *O* contains the plan provisions described in paragraph (b)(2) of this section and because those provisions were in the plan on July 15, 1997 and at all times thereafter before the beginning of the plan year, Plan *O* will not be treated as failing to meet the requirements of section 9802 or § 54.9802–1 for the plan year solely because the plan requires evidence of good health for coverage of the individuals described in those plan provisions.

Example 2. (i) *Facts.* A church organization maintains Plan *P*, which is a church plan that is not funded through insurance coverage and that is a group health plan providing health coverage to individuals employed by entities affiliated with the church and self-employed individuals affiliated with the church (such as ministers). On July 15, 1997 and at all times thereafter before the beginning of the plan year, Plan *P* has required evidence of good health for coverage of any individual who enrolls after the first 90 days of initial eligibility under the plan.

(ii) *Conclusion.* In this *Example 2,* because Plan P contains the plan provisions described in paragraph (b)(3) of this section and because those provisions were in the plan on July 15, 1997 and at all times thereafter before the beginning of the plan year, Plan *P* will not be treated as failing to meet the requirements of section 9802 or § 54.9802–1 for the plan year solely because the plan requires evidence of good health for coverage of individuals enrolling after the first 90 days of initial eligibility under the plan.

(d) *Applicability date.* This section is applicable to plan years beginning on or after July 1, 2007.

■ **Par. 5**. Section 54.9831–1 is amended by revising paragraphs (b) and (c)(1) to read as follows:

§ 54.9831–1 Special rules relating to group health plans.

* * * * *

(b) *General exception for certain small group health plans.* The requirements of §§ 54.9801–1 through 54.9801–6, 54.9802–1, 54.9802–2, 54.9811–1T, 54.9812–1T, and 54.9833–1 do not apply to any group health plan for any plan year if, on the first day of the plan year, the plan has fewer than two participants who are current employees.

(c) *Excepted benefits*—(1) *In general.* The requirements of §§ 54.9801–1 through 54.9801–6, 54.9802–1, 54.9802–2, 54.9811–1T, 54.9812–1T, and 54.9833–1 do not apply to any group health plan in relation to its provision of the benefits described in paragraph (c)(2), (3), (4), or (5) of this section (or any combination of these benefits).

* * * * *

Mark E. Matthews,

Deputy Commissioner for Services and Enforcement, Internal Revenue Service.

Approved: June 22, 2006.

Eric Solomon,

Acting Deputy Assistant Secretary of the Treasury (Tax Policy).

Editorial Note: This document was received at the Office of the Federal Register on December 1, 2006.

[FR Doc. 06–9558 Filed 12–12–06; 8:45 am]

BILLING CODE 4830–01–P

Federal Register

Wednesday,
December 13, 2006

Part IV

Department of the Interior

Fish and Wildlife Service

50 CFR Part 92

Migratory Bird Subsistence Harvest in Alaska; Harvest Regulations for Migratory Birds in Alaska During the 2007 Season; Proposed Rule

DEPARTMENT OF THE INTERIOR

Fish and Wildlife Service

50 CFR Part 92

RIN 1018–AU59

Migratory Bird Subsistence Harvest in Alaska; Harvest Regulations for Migratory Birds in Alaska During the 2007 Season

AGENCY: Fish and Wildlife Service, Interior.

ACTION: Proposed rule.

SUMMARY: The U.S. Fish and Wildlife Service (Service or we) is proposing migratory bird subsistence harvest regulations in Alaska for the 2007 season. This proposed rule would establish regulations that prescribe frameworks, or outer limits, for dates when harvesting of birds may occur, species that can be taken, and methods and means that would be excluded from use. These regulations were developed under a co-management process involving the Service, the Alaska Department of Fish and Game, and Alaska Native representatives. These regulations are intended to provide a framework to enable the continuation of customary and traditional subsistence uses of migratory birds in Alaska. The rulemaking is necessary because the regulations governing the subsistence harvest of migratory birds in Alaska are subject to annual review. This rulemaking proposes regulations that go into effect on April 2, 2007, and expire on August 31, 2007.

DATES: You must submit comments on the proposed subsistence harvest regulations for migratory birds in Alaska by February 12, 2007.

ADDRESSES: Submit your comments on this proposed rule in one of the following ways:

1. By mail addressed to the Regional Director, Alaska Region, U.S. Fish and Wildlife Service, 1011 E. Tudor Road, Anchorage, AK 99503.
2. By fax to (907) 786–3306.
3. By e-mail to *ambcc@fws.gov.*
4. Via the Federal e-rulemaking portal at *http://www.regulations.gov.* Follow the instructions on the site for submitting comments.

FOR FURTHER INFORMATION CONTACT: Fred Armstrong, (907) 786–3887, or Donna Dewhurst, (907) 786–3499, U.S. Fish and Wildlife Service, 1011 E. Tudor Road, Mail Stop 201, Anchorage, AK 99503.

SUPPLEMENTARY INFORMATION:

Background

How Do I Find the History of These Proposed Regulations?

Background information, including past events leading to this action, accomplishments since the amended Migratory Bird Treaties with Canada and Mexico were amended, and a history of addressing conservation issues can be found in the following **Federal Register** notices: August 16, 2002 (67 FR 53511), July 21, 2003 (68 FR 43010), April 2, 2004 (69 FR 17318), April 8, 2005 (70 FR 18244), and February 28, 2006 (71 FR 10404). These documents are readily available at *http://alaska.fws.gov/ambcc/regulations.htm.*

Why Is This Current Rulemaking Necessary?

This current rulemaking is necessary because the migratory bird harvest season is closed unless opened, and the regulations governing subsistence harvest of migratory birds in Alaska are subject to public review and annual approval. The Co-management Council held a meeting in April 2006 to develop recommendations for changes effective for the 2007 harvest season. These recommendations were presented to the Service Regulations Committee (SRC) on July 26 and 27, 2006, and were approved.

This rule proposes regulations for the taking of migratory birds for subsistence uses in Alaska during 2007. This rule proposes to list migratory bird species that are open or closed to harvest, as well as season openings and closures by region, and a change to the Fairbanks North Star Borough excluded area. It also describes a change in the methods and means of taking migratory birds for subsistence purposes.

How Will the Service Continue To Ensure That the Subsistence Harvest Will Not Raise Overall Migratory Bird Harvest?

The Service has an emergency closure provision (§ 92.21), so that if any significant increases in harvest are documented for one or more species in a region, an emergency closure can be requested and implemented. Eligibility to harvest under the regulations established in 2003 was limited to permanent residents, regardless of race, in villages located within the Alaska Peninsula, Kodiak Archipelago, the Aleutian Islands and in areas north and west of the Alaska Range (§ 92.5). These geographical restrictions opened the initial subsistence migratory bird harvest to only about 13 percent of Alaska residents. High-population areas such as Anchorage, the Matanuska-Susitna and Fairbanks North Star boroughs, the Kenai Peninsula roaded area, the Gulf of Alaska roaded area and Southeast Alaska were excluded from the eligible subsistence harvest areas.

Based on petitions requesting inclusion in the harvest, in 2004, we added 13 additional communities based on the five criteria set forth in § 92.5(c). These communities included: Gulkana, Gakona, Tazlina, Copper Center, Mentasta Lake, Chitina, Chistochina, Tatitlek, Chenega, Port Graham and Nanwalek, Tyonek and Hoonah, populations totaling 2,766. In 2005, we added three additional communities for glaucous-winged gull egg gathering only, based on petitions requesting inclusion. These southeastern communities included Craig, Hydaburg, and Yakutat, with a combined population of 2,459. These new regions increased the percentage of the State population included in the subsistence bird harvest only to 14 percent.

In this proposed rule, we have incorporated the Alaska Department of Fish and Game's (ADFG) request to expand the Fairbanks North Star Borough excluded area to the Central Interior excluded area comprising the following: That portion of Unit 20(A) east of the Wood River drainage and south of Rex Trail, including the upper Wood River drainage south of its confluence with Chicken Creek; that portion of Unit 20(C) east of Denali National Park north to Rock Creek and east to Unit 20(A); and that portion of Unit 20(D) west of the Tanana River between its confluence with the Johnson and Delta Rivers, west of the east bank of the Johnson River, and north and west of the Volmar drainage, including the Goodpaster River drainage.

The purpose of the ADFG's petition is to prevent new traditions and increased harvest levels that could result from inclusion of communities that have not traditionally hunted migratory birds in the spring and summer for subsistence. Specifically, this petition would exclude residents of Delta Junction/Big Delta/Fort Greely, McKinley Park/Village, Healy and Ferry from eligibility to participate in spring/summer migratory bird subsistence hunts. The justification for this proposal includes the substantial opposition to spring hunting in the Delta Junction area, particularly to hunting on agricultural lands that attract large number of waterfowl and cranes, and that there is no evidence that there has been a tradition of spring/summer subsistence migratory bird hunting in the proposed excluded area. ADFG also cited the action by the Alaska Joint Boards of

Fisheries and Game in 1992 creating the Fairbanks Non-subsistence area as an additional rationale for this proposal. The report focused on a socio-economic study that was conducted to determine whether or not subsistence traits existed in the Fairbanks region to justify it being considered for a subsistence eligible area. The summary report recommended the Fairbanks area be considered a nonsubsistence use area. The study was based on the application of 12 socio-economic factors to each community to determine whether or not subsistence-related traits existed.

In addition, we propose to clarify the definition of excluded areas to explain that persons living in excluded areas are not eligible to participate in the Alaska spring/summer subsistence harvest and that the excluded area is closed to harvesting.

Subsistence harvest has been monitored for the past 15 years through the use of annual household surveys in the most heavily used subsistence harvest areas, *e.g.*, Yukon/Kuskokwim Delta. Continuation of this monitoring would enable tracking of any major changes or trends in levels of harvest and user participation after legalization of the harvest. OMB initially approved the information collection on October 2, 2003, and assigned OMB control number 1018–0124, which expires on October 31, 2006. In the June 21, 2006, **Federal Register** (71 FR 35690), we published a notice of request to renew OMB approval of the Alaska Subsistence Harvest Survey.

What Is the Proposed Change to the Methods and Means Prohibitions for 2007?

When we established the initial methods and means regulations (68 FR 43010, July 21, 2003), we followed the Co-management Council recommendation to adopt those existing methods and means prohibitions that occur in the Federal (50 CFR 20.21) and Alaska (5AAC92.100) migratory bird hunting regulations and that do not conflict with the customary and traditional methods of taking birds. In this proposed rule, we have incorporated the ADFG's request to prohibit baiting and shooting over a baited area (Statewide).

What Is the Proposed Change to the List of Birds Open to Harvest for 2007?

At the request of the North Slope Borough Fish and Game Management Committee, the Co-management Council recommended continuing into 2007 the provisions originally established in 2005 to allow subsistence use of yellow-billed loons inadvertently caught in subsistence fishing (gill) nets on the North Slope. Yellow-billed loons are culturally important for the Inupiat Eskimo of the North Slope for use in traditional dance regalia. A maximum of 20 yellow-billed loons maybe caught in 2007 pursuant to this provision. Individual reporting to the North Slope Borough Department of Wildlife is required by the end of each season. In addition, the North Slope Borough has asked fishermen, through announcements on the radio and through personal contact, to report all entanglements of loons to better estimate the levels of injury or mortality caused by gill nets. In 2006, four yellow-billed loons were reported taken in fishing nets and an additional one was found alive in a net and released. This provision, to allow subsistence possession and use of yellow-billed loons caught in fishing gill nets, is subject to annual review and renewal by the SRC.

Public Comments Solicited

The Department of the Interior's policy is, whenever practicable, to afford the public an opportunity to participate in the rulemaking process. If you wish to comment, you may submit comments by any one of the methods indicated under the caption **ADDRESSES.**

Our practice is to make comments, including names and home addresses of respondents, available for public review during regular business hours. Individual respondents may request that we withhold their home addresses from the rulemaking record, which we will honor to the extent allowable by law. In some circumstances, we will also withhold from the rulemaking record a respondent's identity, as allowable by law. If you wish us to withhold your name and/or address, you must state this prominently at the beginning of your comment. However, we will not consider anonymous comments. We will make all submissions from organizations or businesses, and from individuals identifying themselves as representatives or officials of organizations or businesses, available for public inspection in their entirety. You may inspect comments received on the proposed regulations during normal business hours at the Service's office in Anchorage, Alaska (see **ADDRESSES**).

In developing the final rule, we will consider each comment received during the public comment period. In the final rule, we may not respond in detail to each comment received during the comment period, but we will summarize all comments received and respond to them.

Statutory Authority

We derive our authority to issue these regulations from the Migratory Bird Treaty Act of 1918, U.S.C. 712(1), which authorizes the Secretary of the Interior, in accordance with the treaties with Canada, Mexico, Japan, and Russia, to ''issue such regulations as may be necessary to assure that the taking of migratory birds and the collection of their eggs, by the indigenous inhabitants of the State of Alaska, shall be permitted for their own nutritional and other essential needs, as determined by the Secretary of the Interior, during seasons established so as to provide for the preservation and maintenance of stocks of migratory birds.''

Executive Order 12866

Executive Order 12866 requires each agency to write regulations that are easy to understand. We invite your comments on how to make this rule easier to understand, including answers to questions such as the following:

(1) Are the requirements in the rule clearly stated?

(2) Does the rule contain technical language or jargon that interferes with its clarity?

(3) Does the format of the rule (grouping and order of sections, use of headings, paragraphing, etc.) aid or reduce its clarity?

(4) Would the rule be easier to understand if it were divided into more (but shorter) sections?

(5) Is the description of the rule in the **SUPPLEMENTARY INFORMATION** section of the preamble helpful in understanding the rule?

(6) What else could we do to make the rule easier to understand?

Send a copy of any comments regarding how we could make this rule easier to understand to: Office of Regulatory Affairs, Department of the Interior, Room 7229, 1849 C Street NW., Washington, DC 20240. You may also e-mail the comments to this address: *Exsec@ios.doi.gov.*

The Office of Management and Budget (OMB) has determined that this document is not a significant rule subject to OMB review under Executive Order 12866.

(a) This rule will not have an annual economic effect of $100 million or more or adversely affect an economic sector, productivity, jobs, the environment, or other units of government. The rule does not provide for new or additional hunting opportunities and therefore will have minimal economic or environmental impact. This rule benefits those participants who engage in the subsistence harvest of migratory

birds in Alaska in two identifiable ways: First, participants receive the consumptive value of the birds harvested; and second, participants get the cultural benefit associated with the maintenance of a subsistence economy and way of life. The Service can estimate the consumptive value for birds harvested under this rule but does not have a dollar value for the cultural benefit of maintaining a subsistence economy and way of life.

The economic value derived from the consumption of the harvested migratory birds has been estimated using the results of a paper by Robert J. Wolfe titled ''Subsistence Food Harvests in Rural Alaska, and Food Safety Issues'' (August 13, 1996). Using data from Wolfe's paper and applying it to the areas that will be included in this process, we determined a maximum economic value of $6 million. This is the estimated economic benefit of the consumptive part of this rule for participants in subsistence hunting. The cultural benefits of maintaining a subsistence economy and way of life can be of considerable value to the participants, and these benefits are not included in this figure.

(b) This rule will not create inconsistencies with other agencies' actions. We are the Federal agency responsible for the management of migratory birds, coordinating with the State of Alaska's Department of Fish and Game on management programs within Alaska. The State of Alaska is a member of the Alaska Migratory Bird Co-management Council.

(c) This rule will not materially affect entitlements, grants, user fees, loan programs, or the rights and obligations of their recipients. The rule does not affect entitlement programs.

(d) This rule will not raise novel legal or policy issues. The subsistence harvest regulations will go through the same national regulatory process as the existing migratory bird hunting regulations in 50 CFR part 20.

Regulatory Flexibility Act

The Department of the Interior certifies that this rule will not have a significant economic effect on a substantial number of small entities as defined under the Regulatory Flexibility Act (5 U.S.C. 601 *et seq.*). An initial regulatory flexibility analysis is not required. Accordingly, a Small Entity Compliance Guide is not required. The rule legalizes a pre-existing subsistence activity, and the resources harvested will be consumed by the harvesters or persons within their local community.

Small Business Regulatory Enforcement Fairness Act

This rule is not a major rule under 5 U.S.C. 804(2), the Small Business Regulatory Enforcement Fairness Act, as discussed in the Executive Order 12866 section above.

(a) This rule will not have an annual effect on the economy of $100 million or more. It will legalize and regulate a traditional subsistence activity. It will not result in a substantial increase in subsistence harvest or a significant change in harvesting patterns. The commodities being regulated under this rule are migratory birds. This rule deals with legalizing the subsistence harvest of migratory birds and, as such, does not involve commodities traded in the marketplace. A small economic benefit from this rule derives from the sale of equipment and ammunition to carry out subsistence hunting. Most, if not all, businesses that sell hunting equipment in rural Alaska would qualify as small businesses. We have no reason to believe that this rule will lead to a disproportionate distribution of benefits.

(b) This rule will not cause a major increase in costs or prices for consumers; individual industries; Federal, State, or local government agencies; or geographic regions. This rule does not deal with traded commodities and, therefore, does not have an impact on prices for consumers.

(c) This rule does not have significant adverse effects on competition, employment, investment, productivity, innovation, or the ability of U.S.-based enterprises to compete with foreign-based enterprises. This rule deals with the harvesting of wildlife for personal consumption. It does not regulate the marketplace in any way to generate effects on the economy or the ability of businesses to compete.

Unfunded Mandates Reform Act

We have determined and certified pursuant to the Unfunded Mandates Reform Act (2 U.S.C. 1501 *et seq.*) that this rule will not impose a cost of $100 million or more in any given year on local, State, or tribal governments or private entities. A statement containing the information required by this Act is therefore not necessary. Participation on regional management bodies and the Co-management Council will require travel expenses for some Alaska Native organizations and local governments. In addition, they will assume some expenses related to coordinating involvement of village councils in the regulatory process. Total coordination and travel expenses for all Alaska Native organizations are estimated to be less than $300,000 per year. In the Notice of Decision (65 FR 16405, March 28, 2000), we identified 12 partner organizations (Alaska Native non-profits and local governments) to administer the regional programs. The Alaska Department of Fish and Game will also incur expenses for travel to Co-management Council and regional management body meetings. In addition, the State of Alaska will be required to provide technical staff support to each of the regional management bodies and to the Co-management Council. Expenses for the State's involvement may exceed $100,000 per year, but should not exceed $150,000 per year. When funding permits, we make annual grant agreements available to the partner organizations and the Alaska Department of Fish and Game to help offset their expenses.

Paperwork Reduction Act

This rule has been examined under the Paperwork Reduction Act of 1995 and has been found to contain no information collection requirements. We have, however, received OMB approval of associated voluntary annual household surveys used to determine levels of subsistence take. The OMB control number for the information collection is 1018–0124, which expires on October 31, 2006. An agency may not conduct or sponsor, and a person is not required to respond to, a collection of information unless it displays a currently valid OMB control number.

Federalism Effects

As discussed in the Executive Order 12866 and Unfunded Mandates Reform Act sections above, this rule does not have sufficient federalism implications to warrant the preparation of a Federalism Assessment under Executive Order 13132. We worked with the State of Alaska on development of these regulations.

Civil Justice Reform—Executive Order 12988

The Department, in promulgating this rule, has determined that it will not unduly burden the judicial system and that it meets the requirements of sections 3(a) and 3(b)(2) of Executive Order 12988.

Takings Implication Assessment

This rule is not specific to particular land ownership, but applies to the harvesting of migratory bird resources throughout Alaska. Therefore, in accordance with Executive Order 12630,

this rule does not have significant takings implications.

Government-to-Government Relations With Native American Tribal Governments

In accordance with the President's memorandum of April 29, 1994, ''Government-to-Government Relations With Native American Tribal Governments'' (59 FR 22951), and Executive Order 13175 (65 FR 67249, November 6, 2000), concerning consultation and coordination with Indian Tribal Governments, we have consulted with Alaska tribes and evaluated the rule for possible effects on tribes or trust resources, and have determined that there are no significant effects. The rule will legally recognize the subsistence harvest of migratory birds and their eggs for tribal members, as well as for other indigenous inhabitants.

Endangered Species Act Consideration

Prior to issuance of annual spring and summer subsistence regulations, we will consider provisions of the Endangered Species Act of 1973, as amended (16 U.S.C. 1531–1543; hereinafter the Act), to ensure that harvesting is not likely to jeopardize the continued existence of any species designated as endangered or threatened, or modify or destroy its critical habitats, and that it is consistent with conservation programs for those species. Consultations under Section 7 of the Act conducted in connection with the environmental assessment for the annual subsistence take regulations may cause us to change these regulations. Our biological opinion resulting from the Section 7 consultation is a public document available for public inspection at the address indicated under the caption **ADDRESSES.**

National Environmental Policy Act Consideration

The annual regulations and options were considered in the Environmental Assessment, ''Managing Migratory Bird Subsistence Hunting in Alaska: Hunting Regulations for the 2007 Spring/Summer Harvest,'' issued August 15, 2006. Copies are available from the address indicated under the caption **ADDRESSES.**

Energy Supply, Distribution, or Use (Executive Order 13211)

On May 18, 2001, the President issued Executive Order 13211 on regulations that significantly affect energy supply, distribution, and use. Executive Order 13211 requires agencies to prepare Statements of Energy Effects when undertaking certain actions. Because this rule would allow only for traditional subsistence harvest and would improve conservation of migratory birds by allowing effective regulation of this harvest, it is not a significant regulatory action under Executive Order 12866. Consequently, it is not expected to significantly affect energy supplies, distribution, and use. Therefore, this action is not a significant energy action under Executive Order 13211 and no Statement of Energy Effects is required.

List of Subjects in 50 CFR Part 92

Exports, Hunting, Imports, Reporting and recordkeeping requirements, Subsistence, Treaties, Wildlife.

For the reasons set out in the preamble, we propose to amend title 50, chapter I, subchapter G, of the Code of Federal Regulations as follows:

PART 92—MIGRATORY BIRD SUBSISTENCE HARVEST IN ALASKA

1. The authority citation for part 92 continues to read as follows:

Authority: 16 U.S.C. 703–712.

Subpart A—General Provisions

2. In subpart A, amend § 92.5 by:

a. Removing paragraph (a)(3);

b. Revising the introductory text and paragraphs (a)(1), (a)(2) introductory text, (a)(2)(iv), and (b) to read as follows:

§ 92.5 Who is eligible to participate?

If you are a permanent resident of a village within a subsistence harvest area, you will be eligible to harvest migratory birds and their eggs for subsistence purposes during the applicable periods specified in subpart D of this part.

(a) * * *

(1) Any person may request the Co-management Council to recommend that an otherwise included area be excluded by submitting a petition stating how the area does not meet the criteria identified in paragraph (c) of this section. The Co-management Council will forward petitions to the appropriate regional management body. The Co-management Council will then consider each petition and will submit to the Service any recommendations to exclude areas from the spring and summer subsistence harvest. The Service will publish any approved recommendations for public comment in the **Federal Register**.

(2) Based on petitions for inclusion recommended by the Co-management Council, the Service has added the following communities to the included areas under this part:

* * * * *

(iv) Southeast Alaska Region—Hoonah, Craig, Hydaburg, and Yakutat.

(b) *Excluded areas*. Excluded areas are not subsistence harvest areas and are closed to harvest. Residents of excluded areas are not eligible persons as defined in § 92.4. Communities located within the excluded areas provided in paragraphs (b)(2) and (b)(3) of this section may petition the Co-management Council through their regional management body for designation as a spring and summer subsistence harvest area. The petition must state how the community meets the criteria identified in paragraph (c) of this section. The Co-management Council will consider each petition and will submit to the Service any recommendations to designate a community as a spring and summer subsistence harvest area. The Service will publish any approved new designations of communities for public comment in the **Federal Register**. Excluded areas consist of the following:

(1) All areas outside of Alaska.

(2) Village areas located in Anchorage, the Matanuska-Susitna Borough, the Kenai Peninsula roaded area, the Gulf of Alaska roaded area, Southeast Alaska, and the Central Interior Excluded Area as described in paragraph (b)(3) of this section generally do not qualify for a spring and summer harvest.

(3) The Central Interior Excluded Area comprises the following: That portion of Unit 20(A) east of the Wood River drainage and south of Rex Trail, including the upper Wood River drainage south of its confluence with Chicken Creek; that portion of Unit 20(C) east of Denali National Park north to Rock Creek and east to Unit 20(A); and that portion of Unit 20(D) west of the Tanana River between its confluence with the Johnson and Delta Rivers, west of the east bank of the Johnson River, and north and west of the Volmar drainage, including the Goodpaster River drainage. The following communities are within the Excluded Area: Delta Junction/Big Delta/Fort Greely, McKinley Park/Village, Healy, Ferry plus all residents of the formerly named Fairbanks North Star Borough Excluded Area.

* * * * *

Subpart C—General Regulations Governing Subsistence Harvest

3. In subpart C, amend § 92.20 by:

a. Removing ''or'' from the end of paragraph (i);

b. Removing the period from, and adding in its place ''; or'' at the end of paragraph (j); and

c. Adding a new paragraph (k) to read as follows:

§ 92.20 Methods and means.

* * * * *

(k) By the aid of baiting, or on or over any baited area, where a person knows or reasonably should know that the area is or has been baited, as provided at 50 CFR 20.21(i) and 16 U.S.C. 704(b).

Subpart D—Annual Regulations Governing Subsistence Harvest

4. In subpart D, revise §§ 92.31 through 92.33 to read as follows:

§ 92.31 Migratory bird species closed to subsistence harvest.

(a) Because of conservation concerns, you may not harvest birds or gather eggs from the following species in 2007:

(1) Spectacled Eider (*Somateria fischeri*).

(2) Steller's Eider (*Polysticta stelleri*).

(3) Emperor Goose (*Chen canagica*).

(4) Aleutian Canada Goose (*Branta canadensis leucopareia*)—Semidi Islands only.

(5) Yellow-billed Loons (*Gavia adamsii*)—Except that in the North Slope Region only, up to 20 yellow-billed loons total for the region may be inadvertently caught in fishing nets and kept for subsistence purposes.

(b) In addition, you may not gather eggs from the following species in 2007:

(1) Cackling Canada Goose (*Branta canadensis minima*).

(2) Black Brant (*Branta bernicla nigricans*)—in the Yukon/Kuskokwim Delta and North Slope regions only.

§ 92.32 Subsistence migratory bird species.

You may harvest birds or gather eggs from the following species, listed in taxonomic order, within all included areas. When birds are listed only to the species level, all subspecies existing in Alaska are open to harvest.

(a) *Family Anatidae.*

(1) Greater White-fronted Goose (*Anser albifrons*).

(2) Snow Goose (*Chen caerulescens*).

(3) Lesser Canada Goose (*Branta canadensis parvipes*).

(4) Taverner's Canada Goose (*Branta canadensis taverneri*).

(5) Aleutian Canada Goose (*Branta canadensis leucopareia*)—except in the Semidi Islands.

(6) Cackling Canada Goose (*Branta canadensis minima*)—except no egg gathering is permitted.

(7) Black Brant (*Branta bernicla nigricans*)—except no egg gathering is permitted in the Yukon/Kuskokwim Delta and the North Slope regions.

(8) Tundra Swan (*Cygnus columbianus*)—except in Units 9(D) and 10.

(9) Gadwall (*Anas strepera*).

(10) Eurasian Wigeon (*Anas penelope*).

(11) American Wigeon (*Anas americana*).

(12) Mallard (*Anas platyrhynchos*).

(13) Blue-winged Teal (*Anas discors*).

(14) Northern Shoveler (*Anas clypeata*).

(15) Northern Pintail (*Anas acuta*).

(16) Green-winged Teal (*Anas crecca*).

(17) Canvasback (*Aythya valisineria*).

(18) Redhead (*Aythya americana*).

(19) Ring-necked Duck (*Aythya collaris*).

(20) Greater Scaup (*Aythya marila*).

(21) Lesser Scaup (*Aythya affinis*).

(22) King Eider (*Somateria spectabilis*).

(23) Common Eider (*Somateria mollissima*).

(24) Harlequin Duck (*Histrionicus histrionicus*).

(25) Surf Scoter (*Melanitta perspicillata*).

(26) White-winged Scoter (*Melanitta fusca*).

(27) Black Scoter (*Melanitta nigra*).

(28) Long-tailed Duck (*Clangula hyemalis*).

(29) Bufflehead (*Bucephala albeola*).

(30) Common Goldeneye (*Bucephala clangula*).

(31) Barrow's Goldeneye (*Bucephala islandica*).

(32) Hooded Merganser (*Lophodytes cucullatus*).

(33) Common Merganser (*Mergus merganser*).

(34) Red-breasted Merganser (*Mergus serrator*).

(b) *Family Gaviidae.*

(1) Red-throated Loon (*Gavia stellata*).

(2) Arctic Loon (*Gavia arctica*).

(3) Pacific Loon (*Gavia pacifica*).

(4) Common Loon (*Gavia immer*).

(5) Yellow-billed Loon (*Gavia adamsii*)—In the North Slope Region only, a total of up to 20 yellow-billed loons inadvertently caught in fishing nets may be kept for subsistence purposes.

(c) *Family Podicipedidae.*

(1) Horned Grebe (*Podiceps auritus*).

(2) Red-necked Grebe (*Podiceps grisegena*).

(d) *Family Procellariidae.*

(1) Northern Fulmar (*Fulmarus glacialis*).

(2) [Reserved].

(e) *Family Phalacrocoracidae.*

(1) Double-crested Cormorant (*Phalacrocorax auritus*).

(2) Pelagic Cormorant (*Phalacrocorax pelagicus*).

(f) *Family Gruidae.*

(1) Sandhill Crane (*Grus canadensis*).

(2) [Reserved].

(g) *Family Charadriidae.*

(1) Black-bellied Plover (*Pluvialis squatarola*).

(2) Common Ringed Plover (*Charadrius hiaticula*).

(h) *Family Haematopodidae.*

(1) Black Oystercatcher (*Haematopus bachmani*).

(2) [Reserved].

(i) *Family Scolopacidae.*

(1) Greater Yellowlegs (*Tringa melanoleuca*).

(2) Lesser Yellowlegs (*Tringa flavipes*).

(3) Spotted Sandpiper (*Actitis macularia*).

(4) Bar-tailed Godwit (*Limosa lapponica*).

(5) Ruddy Turnstone (*Arenaria interpres*).

(6) Semipalmated Sandpiper (*Calidris pusilla*).

(7) Western Sandpiper (*Calidris mauri*).

(8) Least Sandpiper (*Calidris minutilla*).

(9) Baird's Sandpiper (*Calidris bairdii*).

(10) Sharp-tailed Sandpiper (*Calidris acuminata*).

(11) Dunlin (*Calidris alpina*).

(12) Long-billed Dowitcher (*Limnodromus scolopaceus*).

(13) Common Snipe (*Gallinago gallinago*).

(14) Red-necked phalarope (*Phalaropus lobatus*).

(15) Red phalarope (*Phalaropus fulicaria*).

(j) *Family Laridae.*

(1) Pomarine Jaeger (*Stercorarius pomarinus*).

(2) Parasitic Jaeger (*Stercorarius parasiticus*).

(3) Long-tailed Jaeger (*Stercorarius longicaudus*).

(4) Bonaparte's Gull (*Larus philadelphia*).

(5) Mew Gull (*Larus canus*).

(6) Herring Gull (*Larus argentatus*).

(7) Slaty-backed Gull (*Larus schistisagus*).

(8) Glaucous-winged Gull (*Larus glaucescens*).

(9) Glaucous Gull (*Larus hyperboreus*).

(10) Sabine's Gull (*Xema sabini*).

(11) Black-legged Kittiwake (*Rissa tridactyla*).

(12) Red-legged Kittiwake (*Rissa brevirostris*).

(13) Ivory Gull (*Pagophila eburnea*).

(14) Arctic Tern (*Sterna paradisaea*).

(15) Aleutian Tern (*Sterna aleutica*).

(k) *Family Alcidae.*

(1) Common Murre (*Uria aalge*).

(2) Thick-billed Murre (*Uria lomvia*).

(3) Black Guillemot (*Cepphus grylle*).
(4) Pigeon Guillemot (*Cepphus columba*).
(5) Cassin's Auklet (*Ptychoramphus aleuticus*).
(6) Parakeet Auklet (*Aethia psittacula*).
(7) Least Auklet (*Aethia pusilla*).
(8) Whiskered Auklet (*Aethia pygmaea*).
(9) Crested Auklet (*Aethia cristatella*).
(10) Rhinoceros Auklet (*Cerorhinca monocerata*).
(11) Horned Puffin (*Fratercula corniculata*).
(12) Tufted Puffin (*Fratercula cirrhata*).
(l) *Family Strigidae.*
(1) Great Horned Owl (*Bubo virginianus*).
(2) Snowy Owl (*Nyctea scandiaca*).

§ 92.33 Region-specific regulations.

The 2007 season dates for the eligible subsistence harvest areas are as follows:
(a) Aleutian/Pribilof Islands Region.
(1) Northern Unit (Pribilof Islands):
(i) Season: April 2–June 30.
(ii) Closure: July 1–August 31.
(2) Central Unit (Aleut Region's eastern boundary on the Alaska Peninsula westward to and including Unalaska Island):
(i) Season: April 2–June 15 and July 16–August 31.
(ii) Closure: June 16–July 15.
(iii) Special Black Brant Season Closure: August 16–August 31, only in Izembek and Moffet lagoons.
(iv) Special Tundra Swan Closure: All hunting and egg gathering closed in units 9(D) and 10.
(3) Western Unit (Umnak Island west to and including Attu Island):
(i) Season: April 2–July 15 and August 16–August 31.
(ii) Closure: July 16–August 15.
(b) Yukon/Kuskokwim Delta Region.
(1) Season: April 2–August 31.
(2) Closure: 30-day closure dates to be announced by the Service's Alaska Regional Director or his designee, after consultation with local subsistence users, field biologists, and the Association of Village Council President's Waterfowl Conservation Committee. This 30-day period will occur between June 1 and August 15 of each year. A press release announcing the actual closure dates will be forwarded to regional newspapers and radio and television stations and posted in village post offices and stores.
(3) Special Black Brant and Cackling Goose Season Hunting Closure: From the period when egg laying begins until young birds are fledged. Closure dates to be announced by the Service's Alaska Regional Director or his designee, after consultation with field biologists and the Association of Village Council President's Waterfowl Conservation Committee. A press release announcing the actual closure dates will be forwarded to regional newspapers and radio and television stations and posted in village post offices and stores.
(4) Special Area Closure:
(i) The following described goose nesting colonies are closed to all hunting and egg gathering from the period of nest initiation until young birds are fledged:
(A) Kokechik Bay Colony—bounded by 61.61°N to 61.67°N and 165.83°W to 166.08°W;
(B) Tutakoke River Colony—bounded by 61.20°N to 61.28°N and 165.08°W to 165.13°W;
(C) Kigigak Island Colony—bounded by islan's edge;
(D) Baird Peninsula Colony—bounded by 60.87° N to 60.91° N and 164.65° W to 165.80° W; and
(E) Baird Island Colony—bounded by island's edge.
(ii) Closure dates to be announced by the Alaska Regional Director or his designee, after consultation with field biologists and the Association of Village Council President's Waterfowl Conservation Committee. A press release announcing the actual closure dates will be forwarded to regional newspapers and radio and television stations and posted in village post offices and stores.
(c) Bristol Bay Region.
(1) Season: April 2–June 14 and July 16–August 31 (general season); April 2–July 15 for seabird egg gathering only.
(2) Closure: June 15–July 15 (general season); July 16–August 31 (seabird egg gathering).
(d) Bering Strait/Norton Sound Region.
(1) Stebbins/St. Michael Area (Point Romanof to Canal Point):
(i) Season: April 15–June 14 and July 16–August 31.
(ii) Closure: June 15–July 15.
(2) Remainder of the region:
(i) Season: April 2–June 14 and July 16–August 31 for waterfowl; April 2–July 19 and August 21–August 31 for all other birds.
(ii) Closure: June 15–July 15 for waterfowl; July 20–August 20 for all other birds.
(e) Kodiak Archipelago Region, except for the Kodiak Island roaded area, is closed to the harvesting of migratory birds and their eggs. The closed area consists of all lands and waters (including exposed tidelands) east of a line extending from Crag Point in the north to the west end of Saltery Cove in the south and all lands and water south of a line extending from Termination Point along the north side of Cascade Lake extending to Anton Larson Bay. Waters adjacent to the closed area are closed to harvest within 500 feet from the water's edge. The offshore islands are open to harvest.
(1) Season: April 2–June 20 and July 22–August 31; egg gathering: May 1–June 20 only.
(2) Closure: June 21–July 21.
(f) Northwest Arctic Region.
(1) Season: April 2–June 9 and August 15–August 31 (hunting in general); waterfowl egg gathering May 20–June 9 only; seabird egg gathering July 3–July 12 only; hunting molting/non-nesting waterfowl July 1–July 31 only.
(2) Closure: June 10–August 14, except for the taking of seabird eggs and molting/non-nesting waterfowl as provided in paragraph (f)(1) of this section.
(g) North Slope Region.
(1) Southern Unit (Southwestern North Slope regional boundary east to Peard Bay, everything west of the longitude line 158°30′ W and south of the latitude line 70°45′ N to the west bank of the Ikpikpuk River, and everything south of the latitude line 69°45′ N between the west bank of the Ikpikpuk River to the east bank of Sagavinirktok River):
(i) Season: April 2–June 29 and July 30–August 31 for seabirds; April 2–June 19 and July 20–August 31 for all other birds.
(ii) Closure: June 30–July 29 for seabirds; June 20–July 19 for all other birds.
(2) Northern Unit (At Peard Bay, everything east of the longitude line 158°30′ W and north of the latitude line 70°45′ N to west bank of the Ikpikpuk River, and everything north of the latitude line 69°45′ N between the west bank of the Ikpikpuk River to the east bank of Sagavinirktok River):
(i) Season: April 6–June 6 and July 7–August 31 for king and common eiders and April 2–June 15 and July 16–August 31 for all other birds.
(ii) Closure: June 7–July 6 for king and common eiders; June 16–July 15 for all other birds.
(3) Eastern Unit (East of eastern bank of the Sagavanirktok River):
(i) Season: April 2–June 19 and July 20–August 31.
(ii) Closure: June 20–July 19.
(4) All Units: yellow-billed loons. Annually, up to 20 yellow-billed loons total for the region may be caught inadvertently in subsistence fishing nets in the North Slope Region and kept for subsistence use. Individuals must report each yellow-billed loon inadvertently caught while subsistence gill net fishing

to the North Slope Borough Department of Wildlife Management by the end of the season.

(h) Interior Region.

(1) Season: April 2–June 14 and July 16–August 31; egg gathering May 1–June 14 only.

(2) Closure: June 15–July 15.

(i) Upper Copper River (Harvest Area: State of Alaska Game Management Units 11 and 13) (Eligible communities: Gulkana, Chitina, Tazlina, Copper Center, Gakona, Mentasta Lake, Chistochina and Cantwell).

(1) Season: April 15–May 26 and June 27–August 31.

(2) Closure: May 27–June 26.

(3) The Copper River Basin communities listed above also documented traditional use harvesting birds in Unit 12, making them eligible to hunt in this unit during the seasons specified in paragraph (h) of this section.

(j) Gulf of Alaska Region.

(1) Prince William Sound Area (Harvest area: Unit 6 [D]), (Eligible Chugach communities: Chenega Bay, Tatitlek).

(i) Season: April 2–May 31 and July 1–August 31.

(ii) Closure: June 1–30.

(2) Kachemak Bay Area (Harvest area: Unit 15[C] South of a line connecting the tip of Homer Spit to the mouth of Fox River) (Eligible Chugach communities: Port Graham, Nanwalek).

(i) Season: April 2–May 31 and July 1–August 31.

(ii) Closure: June 1–30.

(k) Cook Inlet (Harvest area: portions of Unit 16[B] as specified below) (Eligible communities: Tyonek only).

(1) Season: April 2 May–31—That portion of Unit 16(B) south of the Skwentna River and west of the Yentna River, and August 1–31—That portion of Unit 16(B) south of the Beluga River, Beluga Lake, and the Triumvirate Glacier.

(2) Closure: June 1–July 31.

(l) Southeast Alaska.

(1) Community of Hoonah (Harvest area: National Forest lands in Icy Strait and Cross Sound, including Middle Pass Rock near the Inian Islands, Table Rock in Cross Sound, and other traditional locations on the coast of Yakobi Island. The land and waters of Glacier Bay National Park remain closed to all subsistence harvesting [50 CFR Part 100.3]).

(i) Season: glaucous-winged gull egg gathering only: May 15–June 30.

(ii) Closure: July 1–August 31.

(2) Communities of Craig and Hydaburg (Harvest area: small islands and adjacent shoreline of western Prince of Wales Island from Point Baker to Cape Chacon, but also including Coronation and Warren islands).

(i) Season: glaucous-winged gull egg gathering only: May 15–June 30.

(ii) Closure: July 1–August 31.

(1) Community of Yakutat (Harvest area: Icy Bay [Icy Cape to Pt. Riou], and coastal lands and islands bordering the Gulf of Alaska from Pt. Manby southeast to Dry Bay).

(i) Season: glaucous-winged gull egg gathering only: May 15–June 30.

(ii) Closure: July 1–August 31.

Dated: November 21, 2006.

David M. Verhey,

Acting Assistant Secretary for Fish and Wildlife and Parks.

[FR Doc. 06–9492 Filed 12–12–06; 8:45 am]

BILLING CODE 4310–55–P

Federal Register

Wednesday,
December 13, 2006

Part V

Securities and Exchange Commission

17 CFR Part 240 and 242
Amendments to Regulation SHO and Rule 10a–1; Proposed Rule

SECURITIES AND EXCHANGE COMMISSION

17 CFR PARTS 240 and 242

[Release No. 34–54891; File No. S7–21–06]

RIN 3235–AJ76

Amendments to Regulation SHO and Rule 10a–1

AGENCY: Securities and Exchange Commission.

ACTION: Proposed rule.

SUMMARY: The Securities and Exchange Commission (''Commission'' or ''SEC'') is proposing to amend the short sale price test under the Securities Exchange Act of 1934 (''Exchange Act''). The proposed amendments are intended to provide a more consistent regulatory environment for short selling by removing restrictions on the execution prices of short sales (''price tests'' or ''price test restrictions''), as well as prohibiting any self-regulatory organization (''SRO'') from having a price test. In addition, the Commission is proposing to amend Regulation SHO to remove the requirement that a broker-dealer mark a sell order of an equity security as ''short exempt,'' if the seller is relying on an exception from a price test.

DATES: Comments should be received on or before February 12, 2007.

ADDRESSES: Comments may be submitted by any of the following methods:

Electronic Comments

- Use the Commission's Internet comment form (*http://www.sec.gov/rules/proposed.shtml*); or
- Send an e-mail to *rule-comments@sec.gov*. Please include File Number S7–21–06 on the subject line; or
- Use the Federal eRulemaking Portal (*http://www.regulations.gov*). Follow the instructions for submitting comments.

Paper Comments

- Send paper comments in triplicate to Nancy M. Morris, Secretary, Securities and Exchange Commission, 100 F Street, NE., Washington, DC 20549–1090.

All submissions should refer to File Number S7–21–06. This file number should be included on the subject line if e-mail is used. To help us process and review your comments more efficiently, please use only one method. The Commission will post all comments on the Commission's Internet Web site (*http://www.sec.gov/rules/proposed.shtml*). Comments are also available for public inspection and copying in the Commission's Public Reference Room, 100 F Street, NE., Washington, DC 20549. All comments received will be posted without change; we do not edit personal identifying information from submissions. You should submit only information that you wish to make available publicly.

FOR FURTHER INFORMATION CONTACT: James A. Brigagliano, Acting Associate Director, Josephine J. Tao, Branch Chief, Lillian Hagen, Special Counsel, Victoria L. Crane, Special Counsel, Office of Trading Practices and Processing, Division of Market Regulation, at (202) 551–5720, at the Securities and Exchange Commission, 100 F Street, NE., Washington, DC 20549–6628.

SUPPLEMENTARY INFORMATION: The Commission is requesting public comment on the removal of Rule 10a–1 [17 CFR 240.10a–1] and proposed amendments to Rules 200 and 201 of Regulation SHO [17 CFR 242.200 and 242.201] under the Exchange Act.

I. Introduction

Section 10(a) of the Exchange Act [1] gives the Commission plenary authority over short sales [2] of securities registered on a national securities exchange as necessary or appropriate in the public interest or for the protection of investors. The Commission originally adopted Rule 10a–1 in 1938 to restrict short selling in a declining market.[3]

The core provisions of Rule 10a–1 have remained virtually unchanged since its adoption almost 70 years ago. As discussed in more detail below, however, over the years, in response to changes in the securities markets, including changes in trading strategies and systems used in the marketplace, the Commission has added exceptions to Rule 10a–1 and granted numerous written requests for relief from the rule's restrictions. In addition, under current price test regulation, different price tests apply to securities trading in different markets. We also note that current price test restrictions apply generally only to large or more actively-traded securities. We believe that the increased demand for exemptions from the restrictions of Rule 10a–1, and the disparate application of current price test regulation, limit the reach of current price test restrictions, potentially create an unlevel playing field among market participants, and allow for regulatory arbitrage.

In 2004, we adopted Rule 202T of Regulation SHO,[4] which established procedures for the Commission to temporarily suspend price tests so that the Commission could study the effectiveness of these tests.[5] Pursuant to the process established in Rule 202T of Regulation SHO, we issued an order (''First Pilot Order'') creating a one year pilot (''Pilot'') temporarily suspending the provisions of Rule 10a–1(a) and any price test of any exchange or national securities association for short sales of certain securities.[6]

The Pilot was designed to assist the Commission in assessing whether changes to current short sale regulation are necessary in light of current market practices and the purposes underlying short sale regulation.[7] The Commission stated in the Regulation SHO Adopting Release that conducting a pilot pursuant to Rule 202T would ''allow us to obtain data on the impact of short selling in the absence of a price test to assist in determining, among other things, the extent to which a price test is necessary to further the objectives of short sale regulation, to study the effects of relatively unrestricted short selling on market volatility, price efficiency, and liquidity, and to obtain empirical data to

[1] 15 U.S.C. 78j(a).

[2] Rule 200(a) of Regulation SHO defines a ''short sale'' as ''any sale of a security which the seller does not own or any sale which is consummated by the delivery of a security borrowed by, or for the account of, the seller.'' 17 CFR 242.200(a).

[3] *See* Exchange Act Release No. 1548 (January 24, 1938), 3 FR 213 (January 26, 1938).

[4] 17 CFR 242.202T.

[5] *See id.; see also* Exchange Act Release No. 50103 (July 28, 2004), 69 FR 48008, 48012–48013 (August 6, 2004) (''Regulation SHO Adopting Release'').

[6] Exchange Act Release No. 50104 (July 28, 2004), 69 FR 48032 (August 6, 2004). Specifically, the First Pilot Order suspended price tests for: (1) Short sales in the securities identified in Appendix A to the First Pilot Order; (2) short sales in the securities included in the Russell 1000 index effected between 4:15 p.m. EST and the open of the effective transaction reporting plan of the Consolidated Tape Association (''consolidated tape'') on the following day; and (3) short sales in any security not included in paragraphs (1) and (2) effected in the period between the close of the consolidated tape and the open of the consolidated tape on the following day. In addition, the First Pilot Order provided that the Pilot would commence on January 3, 2005 and terminate on December 31, 2005, and that the Commission might issue further orders affecting the operation of the First Pilot Order. 69 FR at 48033. On November 29, 2004, we issued an order resetting the Pilot to commence on May 2, 2005 and end on April 28, 2006 to give market participants additional time to make systems changes necessary to comply with the Pilot. Exchange Act Release No. 50747 (November 29, 2004), 69 FR 70480 (December 6, 2004). On April 20, 2006, we issued an order (''Third Pilot Order'') extending the termination date of the Pilot to August 6, 2007, the date on which temporary Rule 202T of Regulation SHO expires. Exchange Act Release No. 53684 (April 20, 2006), 71 FR 24765 (April 26, 2006). The purpose of the Third Pilot Order is to maintain the status quo with regard to price tests for Pilot securities while the staff completes its analysis of the Pilot data and the Commission conducts any additional short sale rulemaking.

[7] 69 FR at 48032.

help assess whether a price test should be removed, in part or in whole, for some or all securities, or if retained, should be applied to additional securities.''[8] As noted in the Regulation SHO Adopting Release, the empirical data from the Pilot was to be obtained and analyzed ''as part of [the Commission's] assessment as to whether the price test should be removed or modified, in part or whole, for actively-traded securities or other securities.''[9]

Thus, the Commission's Office of Economic Analysis (''OEA'') gathered the data made public during the Pilot, analyzed this data and provided the Commission with a draft summary report on the Pilot.[10] The OEA Staff's Draft Summary Pilot Report examined several aspects of market quality including the overall effect of price tests on short selling, liquidity, volatility and price efficiency. The Pilot data was also designed to allow the Commission and members of the public to examine whether the effects of price tests are similar across stocks.[11]

In addition, the Commission encouraged outside researchers to examine the Pilot. In response to this request, the Commission has received three completed studies (the ''Academic Studies'') from outside researchers that specifically examine the Pilot data.[12] The Commission also held a public roundtable (the ''Regulation SHO Roundtable'') that focused on the empirical evidence learned from the Pilot data (the OEA Staff's Draft Summary Pilot Report, Academic Studies, and Regulation SHO Roundtable are referred to collectively herein as, the ''Pilot Results'').[13] The Pilot Results contained a variety of observations, which we considered in determining whether or not to propose removal of current price test restrictions. Generally, the Pilot Results urged removal of current price test restrictions. In addition, the empirical evidence did not support extending a price test to either small or thinly-traded securities.[14]

Based on our review of the Pilot Results and of the status of current price test restrictions, we are proposing to remove the tick test of Rule 10a–1 and add Rule 201 of Regulation SHO to provide that no price test, including any price test of any SRO, shall apply to short sales in any security. Rule 201 would also prohibit any SRO from having a price test. In addition, because we are proposing to remove all current price test restrictions, and prohibit any price test by any SRO, we are proposing to amend Rule 200(g) of Regulation SHO to remove the requirement that a broker-dealer mark a sell order of an equity security as ''short exempt'' if the seller is relying on an exception from the price test of Rule 10a–1, or any price test of any exchange or national securities association.[15]

We note that today's markets are characterized by high levels of transparency and regulatory surveillance. These characteristics greatly reduce the risk of abusive or manipulative short selling going undetected if we were to remove price test restrictions, and permit regulators to monitor the types of activities that Rule 10a–1 and other price tests are designed to prevent. The general anti-fraud and anti-manipulation provisions of the federal securities laws would also continue to prohibit activity that improperly influences the price of a security.[16]

II. Background

A. Short Selling and Its Market Uses and Effects

A short sale is the sale of a security which the seller does not own or any sale which is consummated by the delivery of a security borrowed by, or for the account of, the seller.[17] In order to deliver the security to the purchaser, the short seller borrows the security, typically from a broker-dealer or an institutional investor. The short seller later closes out the position by purchasing equivalent securities on the open market, or by using an equivalent security it already owned, and returning the security to the lender. A short seller hopes to profit from the transaction by selling short at a higher price than the price at which it repurchases the securities to return to the lender. In general, short selling is used to profit from an expected downward price movement, to provide liquidity in response to unanticipated demand, or to hedge the risk of a long position in the same security or in a related security.

Short selling provides the market with at least two important benefits: market liquidity and pricing efficiency.[18] Market liquidity may be provided through short selling by market professionals, such as market makers (including specialists) and block positioners, to offset temporary imbalances in the buying and selling interest for securities. These short sales make stock available to purchasers and reduce the risk that the price paid by purchasers is artificially high because of a temporary contraction of selling interest. Short sellers covering their sales also may add to the buying interest of stock available to sellers.

In addition, short selling contributes to the pricing efficiency of the equities markets. Efficient markets require that prices fully reflect all buy and sell interest. Short sales reflect the view that the security is overvalued and the price of the security will fall, just as long purchases reflect the view that the security is undervalued and the price

[8] Regulation SHO Adopting Release at 48009.

[9] Regulation SHO Adopting Release at 48013. In the Regulation SHO Adopting Release we noted that ''the purpose of the [P]ilot is to assist the Commission in considering alternatives, such as: (1) Eliminating a Commission-mandated price test for an appropriate group of securities, which may be all securities; (2) adopting a uniform bid test, and any exceptions, with the possibility of extending a uniform bid test to securities for which there is currently no price test; or (3) leaving in place the current price tests.'' Regulation SHO Adopting Release at 48010.

[10] *See* Office of Economic Analysis U.S. Securities and Exchange Commission, *Economic Analysis of the Short Sale Price Restrictions Under the Regulation SHO Pilot* (September 14, 2006) (the ''OEA Staff's Draft Summary Pilot Report''), available at *http://www.sec.gov/about/economic/shopilot091506/draft_reg_sho_pilot_report.pdf.*

[11] In the Regulation SHO Adopting Release, the Commission stated its expectation that data on trading during the Pilot would be made available to the public to encourage independent researchers to study the Pilot. *See* Regulation SHO Adopting Release at 48009, n.9. Accordingly, nine SROs began publicly releasing transactional short selling data on January 3, 2005. The nine SROs were the AMEX, ARCA, BSE, CHX, NASD, Nasdaq, National Stock Exchange, NYSE and Phlx. The SROs agreed to collect and make publicly available trading data on each executed short sale involving equity securities reported by the SRO to a securities information processor. The SROs published the information on a monthly basis on their Internet Web sites.

[12] *See* Karl Diether, Kuan Hui Lee and Ingrid M. Werner, *It's SHO Time! Short-Sale Price-Tests and Market Quality,* June 20, 2006 (''Diether, Lee and Werner''); Gordon J. Alexander and Mark A. Peterson, *(How) Do Price Tests Affect Short Selling?* May 23, 2006 (''Alexander and Peterson''); J. Julie Wu, *Uptick Rule, short selling and price efficiency,* August 14, 2006 (''Wu'').

[13] A transcript from the roundtable (''the Roundtable Transcript'') is available at *http://www.sec.gov/about/economic/shopilottrans091506.pdf.*

[14] The Pilot Results are discussed in more detail in Section II.D below.

[15] This proposal affects price tests and related marking requirements only. It does not relate to other provisions of Regulation SHO. We note, however, that in a separate proposal we recently proposed amendments to provisions of Regulation SHO that would eliminate the ''grandfather'' provision and limit the options market maker exception. *See* Exchange Act Release No. 54154 (July 14, 2006), 71 FR 41710 (July 21, 2006) (''Regulation SHO Amendments Proposing Release''). This proposal does not alter the proposed amendments in the Regulation SHO Amendments Proposing Release.

[16] *See, e.g.,* Securities Act of 1933 Section 17(a), Exchange Act Sections 9(a), 10(b), and 15(c) and Rule 10b-5 thereunder. *See also* Regulation M, Rule 105.

[17] 17 CFR 242.200(a).

[18] *See* Owen A Lamont and Richard H Thaler, *Can the Market Add and Subtract? Mispricing in Tech Stocks Carve-outs,* Journal of Political Economy, May 2001.

will rise. Both the long purchaser and the short seller hope to profit, or hedge against loss, by buying low and selling high, though the strategies differ in the sequence of transactions. Market participants who believe a stock is overvalued may engage in short sales in an attempt to profit from a perceived divergence of prices from true economic values. Such short sellers add to stock pricing efficiency because their transactions inform the market of their evaluation of future stock price performance. This evaluation is reflected in the resulting market price of the security.[19]

Although short selling serves useful market purposes, it also may be used to illegally manipulate stock prices.[20] One example is the ''bear raid'' where an equity security is actively sold short to drive down prices in the hope of convincing less informed investors of a negative material perception of the stock, triggering sell orders. Falling prices could also trigger margin calls and possibly forced liquidations of the security, depressing the price further.[21] This unrestricted short selling could exacerbate a declining market in a security by eliminating bids, and causing a further reduction in the price of a security by creating an appearance that the security's price is falling for fundamental reasons.

B. Current Short Sale Regulation

One way short sales are regulated in the United States is through price tests, which regulate the execution prices of short sales. Current short sale regulation applies different price tests to securities trading in different types of markets. Section 10(a) of the Exchange Act gives the Commission plenary authority to regulate short sales of securities registered on a national securities exchange, as necessary or appropriate in the public interest for the protection of investors.[22] After conducting an inquiry into the effects of concentrated short selling during the market break of 1937, the Commission adopted the price test contained in Rule 10a–1 in 1938 to restrict short selling in a declining market.[23] The core provisions of the rule are largely the same today as when they were adopted.

Paragraph (a) of Rule 10a–1 covers short sales in securities registered on, or admitted to unlisted trading privileges (''UTP'') on, a national securities exchange (''listed securities''), if trades of the security are reported pursuant to an ''effective transaction reporting plan'' and information regarding such trades is made available in accordance with such plan on a real-time basis to vendors of market transaction information.[24]

Rule 10a–1(a)(1) provides that, subject to certain exceptions, a listed security may be sold short (A) at a price above the price at which the immediately preceding sale was effected (plus tick), or (B) at the last sale price if it is higher than the last different price (zero-plus tick).[25] Short sales are not permitted on minus ticks or zero-minus ticks, subject to narrow exceptions. The operation of these provisions is commonly described as the ''tick test.'' The following transactions illustrate the operation of the tick test:

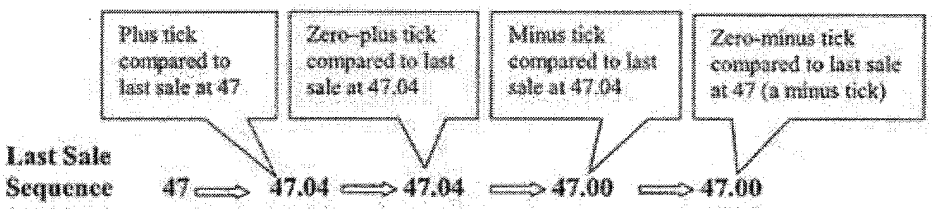

The first execution at 47.04 is a plus tick since it is higher than the previous last trade price of 47.00. The next transaction at 47.04 is a zero-plus tick since there is no change in trade price but the last change was a plus tick. Short sales could be executed at 47.04 or above. The final two transactions at 47.00 are minus and zero-minus transactions, respectively. Subsequently, short sales would have to be effected at the next higher increment above 47.00 in order to comply with Rule 10a–1.

In adopting the tick test, the Commission sought to achieve three objectives: (i) Allowing relatively unrestricted short selling in an advancing market; (ii) preventing short selling at successively lower prices, thus eliminating short selling as a tool for driving the market down; and (iii) preventing short sellers from accelerating a declining market by exhausting all remaining bids at one price level, causing successively lower prices to be established by long sellers.[26]

Rule 10a–1 applies only to listed securities and, therefore, securities quoted on the over-the-counter bulletin board (''OTCBB'') and pink sheets are not subject to Rule 10a–1. In addition, prior to January 13, 2006, before The NASDAQ Stock Market LLC (''Nasdaq'') began operations as a national securities exchange, Nasdaq securities were not subject to Rule 10a–1.

In 1994, the Commission granted temporary approval to the National Association of Securities Dealers, Inc. (''NASD'') to apply its own short sale rule, NASD Rule 3350 (''former NASD Rule 3350'' or ''former NASD Rule 3350's bid test''), to Nasdaq Global

[19] Arbitrageurs also contribute to pricing efficiency by utilizing short sales to profit from price disparities between a stock and a derivative security, such as a convertible security or an option on that stock. For example, an arbitrageur may purchase a convertible security and sell the underlying stock short to profit from a current price differential between two economically similar positions.

[20] *See, e.g., S.E.C.* v. *Gardiner,* 48 S.E.C. Docket 811, No. 91 Civ. 2091 (S.D.N.Y. March 27, 1991) (alleged manipulation by sales representative by directing or inducing customers to sell stock short in order to depress its price); *U.S.* v. *Russo,* 74 F.3d 1383, 1392 (2nd Cir. 1996) (short sales were sufficiently connected to the manipulation scheme as to constitute a violation of Exchange Act Section 10(b) and Rule 10b–5).

[21] At that time, many people blamed ''bear raids'' for the 1929 stock market crash and the market's prolonged inability to recover from the crash. *See* 7 Louis Loss and Joel Seligman, *Securities Regulation* 3203–04, n.213 (3d ed. 2006).

[22] *See* 15 U.S.C. 78j(a).

[23] *See supra* n.3.

[24] Rule 10a–1 uses the term ''effective transaction reporting plan'' as defined in Rule 600 of Regulation NMS (17 CFR 242.600) under the Exchange Act. *See* 17 CFR 240.10a–1(a)(1)(i).

[25] The last sale price is the price reported pursuant to an effective transaction reporting plan, i.e., the consolidated tape, or to the last sale price reported in a particular marketplace. Under Rule 10a–1, the Commission gives market centers the choice of measuring the tick of the last trade based on executions solely on their own exchange rather than those reported to the consolidated tape. *See* 17 CFR 240.10a–1(a)(2).

[26] *See* Exchange Act Release No. 13091 (December 21, 1976), 41 FR 56530 (December 28, 1976).

Market securities [27] on a pilot basis.[28] Under former NASD Rule 3350, Nasdaq Global Market securities traded over-the-counter (''OTC'') and reported to an NASD facility were subject to former NASD Rule 3350's bid test.[29] In addition, Nasdaq Global Market securities traded on, or reported to, Nasdaq were subject to former NASD Rule 3350's bid test.

Former NASD Rule 3350 was, by its terms, inapplicable to Nasdaq Capital Market securities.[30] In addition, short sales in Nasdaq Global Market securities effected on any national securities exchange that traded Nasdaq Global Market securities on a UTP basis were not subject to former NASD Rule 3350.

On January 13, 2006, the Commission approved Nasdaq's application to become a national securities exchange.[31] Once Nasdaq's exchange application became effective, Rule 10a–1 would have applied to all Nasdaq securities wherever traded. In Nasdaq's exchange application, however, Nasdaq requested an exemption from Rule 10a–1 and proposed to adopt a short sale rule, Nasdaq Rule 3350 (''Nasdaq Rule 3350'' or ''Nasdaq's bid test''), similar to former NASD Rule 3350, so that it could continue to regulate short sales in Nasdaq Global Market securities under a bid test.[32] Nasdaq also requested to exempt Nasdaq Capital Market securities from Rule 10a–1's tick test.[33] In granting Nasdaq's requested exemptions, the Commission noted that it believed that it is important to maintain the status quo of short sale regulation during the Pilot in order to promote efficient regulation and to avoid unnecessarily burdening markets with the imposition of costs associated with implementing a price test that may be temporary.[34] Nasdaq Rule 3350 prohibits short sales in Nasdaq Global Market securities at or below the current best (inside) bid displayed in the National Market System when the current best (inside) bid is below the preceding best (inside) bid in the security.[35]

Similarly, to maintain the status quo for Nasdaq Global Market securities traded OTC and reported to a NASD facility during the Pilot, we granted an exemption to the NASD to permit Nasdaq Global Market securities traded OTC and reported to a NASD facility to continue to be subject to a bid test similar to that contained in former NASD Rule 3350 rather than Rule 10a–1's tick test, and Nasdaq Capital Market securities traded OTC and reported to a NASD facility to continue to not be subject to any price test.[36] Thus, with respect to trades in Nasdaq Global Market securities reported to the NASD's Alternative Display Facility (''ADF'') [37] or the Trading Reporting Facility (''TRF''),[38] NASD Rule 5100 prohibits short sales at or below the current national best (inside) bid when the current national best (inside) bid is below the previous best (inside) bid in the security.[39]

For these same reasons, we also granted an exemption for exchanges trading Nasdaq Global Market and Nasdaq Capital Market securities on a UTP basis to continue to do so without being subject to any price test until completion of the Pilot.[40]

In summary, under the current market structure, Nasdaq Global Market securities traded on Nasdaq or the OTC market and reported to a NASD facility are subject to Nasdaq's or NASD's bid tests.[41] Other listed securities traded on an exchange, or otherwise, are subject to Rule 10a–1's tick test. Nasdaq securities traded on exchanges other than Nasdaq are not subject to any price test. In addition, many thinly-traded securities, such as Nasdaq Capital Market securities, and securities quoted on the OTCBB and pink sheets, are not subject to any price test wherever traded.

C. Current Price Test Exemptions

As noted above, the core provisions of Rule 10a–1 have remained essentially unchanged since the rule was adopted in 1938. Over the years, however, in response to changes in trading strategies and systems used in the marketplace, the Commission has added exceptions to Rule 10a–1 [42] and granted numerous written requests for relief from the rule's restrictions. These requests for exemptive relief have increased dramatically in recent years in response to significant developments in the securities markets, such as

[27] Nasdaq Global Market securities were formerly known as Nasdaq National Market securities. In connection with Nasdaq commencing operations as a national securities exchange, the Nasdaq National Market was renamed the Nasdaq Global Market and Nasdaq National Market securities were renamed Nasdaq Global Market securities. *See* NASD Rule 4200(a)(6) (providing that the Nasdaq Global Market is the successor to the Nasdaq National Market); *see also* Exchange Act Release No. 54071 (June 29, 2006), 71 FR 38922 (July 10, 2006). In this release, references to Nasdaq Global Market securities includes Nasdaq National Market securities, as applicable.

[28] *See* Exchange Act Release No. 34277 (June 29, 1994), 59 FR 34885 (July 7, 1994). The NASD's short sale rule was originally approved on an eighteen-month pilot basis. The NASD proposed, and the Commission approved, extensions of former NASD Rule 3350 several times. *See, e.g.*, Exchange Act Release No. 53093 (January 10, 2006), 71 FR 2966 (January 18, 2006).

[29] Former NASD Rule 3350's bid test provided that short sales in Nasdaq Global Market securities must not be effected at or below the current national best (inside) bid when the current national best (inside) bid is below the preceding national best (inside) bid.

[30] Nasdaq Capital Market securities were formerly known as Nasdaq SmallCap securities. *See* Exchange Act Release No. 34–52489 (September 21, 2005), 70 FR 56948 (September 29, 2005).

[31] *See* SEC Order in the Matter of the Application of The Nasdaq Stock Market LLC for registration as a National Securities Exchange, Exchange Act Release No. 53128 (January 13, 2006), 71 FR 3550 (January 23, 2006).

[32] Nasdaq Rule 3350 contains provisions similar to former NASD Rule 3350 regarding short sales in Nasdaq Global Market securities executed on, or reported to, Nasdaq. *See* Nasdaq Rule 3350. *See also* 71 FR at 3561.

[33] *See id.*

[34] *See* 71 FR at 3562.

[35] *See* Nasdaq Rule 3350.

[36] *See* letter from James A. Brigagliano, Acting Associate Director, Division of Market Regulation to Marc Menchel, Executive Vice President and General Counsel, NASD, Inc. (June 26, 2006) (providing exemptive relief to allow (i) Nasdaq Global Market securities traded OTC and reported to a NASD facility to be subject to NASD Rule 5100 (''NASD Rule 5100'' or ''NASD's bid test'') rather than Rule 10a–1, and (ii) Nasdaq Capital Market securities traded OTC and reported to a NASD facility to not be subject to either Rule 10a–1 or NASD Rule 5100).

[37] The ADF is a facility operated by NASD on a pilot basis for members that choose to quote or effect trades in Nasdaq securities otherwise than on an exchange. The ADF collects and disseminates quotations and trade reports, and compares trades. *See* NASD Rule 4100A.

[38] The TRF permits NASD members that internalize customer orders through the Nasdaq Stock Market facility of the NASD to continue to internalize such orders pursuant to NASD rules and to report trades to the TRF of the NASD. The TRF uses Nasdaq's technology, *i.e.*, ACT, to accept OTC trade reports from NASD members in Nasdaq securities. *See* Exchange Act Release No. 54085 (June 30, 2006), 71 FR 38910 (July 10, 2006).

[39] *See* NASD Rule 5100.

[40] *See* letter from James A. Brigagliano, Acting Associate Director, Division of Market Regulation to David C. Whitcomb, Jr., Senior Vice President and Chief Regulatory Officer, the Chicago Stock Exchange, Inc. (July 20, 2006) (providing an exemption from any price test for exchanges trading Nasdaq securities on a UTP basis. Exchanges may, however, adopt a bid test to apply to trading in Nasdaq securities).

[41] Recently, the Commission approved proposed rule changes by Nasdaq and the NASD to exempt securities comprising the Nasdaq-100 Index from Nasdaq Rule 3350 and NASD Rule 5100, respectively. *See* Exchange Act Release No. 54435 (September 13, 2006), 71 FR 55042 (September 20, 2006); Exchange Act Release No. 54558 (October 2, 2006), 71 FR 59573 (October 10, 2006).

[42] Paragraph (e) of Rule 10a–1 contains the exceptions to the rule. The exceptions to the tick test are designed to permit certain types of trading activities that are intended to benefit the markets or that are believed to carry little risk of the kind of manipulative or destabilizing trading that Rule 10a–1 was designed to address. *See* Exchange Act Release No. 48709 (October 28, 2003), 68 FR 62972 (November 6, 2003); 17 CFR 240.10a–1(e). In addition, in considering whether to propose removing the price tests of any exchange or national securities association for all securities, the Commission reviewed the exceptions to the NASD's and Nasdaq's bid tests, such as the bona-fide market maker exception contained in each of those rules. *See* NASD Rule 5100(c); Nasdaq Rule 3350(c).

decimalization and the spread of fully automated markets. Among others, the Commission has granted exemptions from Rule 10a–1: (i) For transactions in exchange traded funds (''ETFs'');[43] (ii) to permit registered market makers and exchange specialists publishing two-sided quotes in a security to sell short to facilitate customer market and marketable limit orders at the consolidated best offer, regardless of the last trade price;[44] (iii) for certain transactions executed on a volume-weighted average price (''VWAP'') basis;[45] (iv) to electronic trading systems that match and execute trades at independently derived prices during random times within specific time intervals;[46] and (v) to allow broker-dealers to fill customer orders, without the restrictions of the tick test, if: (a) A broker-dealer receives a sell order from a customer who is net ''long'' the securities being sold, and the broker-dealer then seeks to execute that order, either in whole or in part, by selling the security as riskless principal, even if the broker-dealer has an overall net ''short'' position in such security; or (b) a broker-dealer receives a buy order from a customer, and the broker-dealer then seeks to execute that order, either in whole or in part, by purchasing the security as riskless principal, and then selling the security to the customer, even if the broker-dealer has an overall net ''short'' position in such security.[47] We have granted these exemptions because we believe that the types of trading activities described in each of the exemptive request letters do not appear to involve the types of abuses that Rule 10a–1 was designed to address.[48] We believe, however, that by granting these exemptions we limit the reach of the price test restrictions contained in Rule 10a–1 and potentially create an unlevel playing field among market participants. Moreover, the fact that an increasing number of market participants have requested these exemptions indicates to us that the current rule may no longer be suited to the wide variety of trading strategies and systems currently used in the marketplace.

D. Pilot Results

The Pilot commenced on May 2, 2005 and is scheduled to terminate no later than August 6, 2007.[49] The purpose of the Pilot was to allow the Commission to study the effectiveness of current price test restrictions and, in particular, to assist the Commission in determining whether current price test restrictions should be removed or modified, in part or whole, for some or all securities.[50] Consistent with this purpose, the Commission has been able to collect empirical evidence on the effects of relatively unrestricted short selling on market volatility, price efficiency (including manipulation), and liquidity from the OEA Staff's Draft Summary Pilot Report and the Academic Studies. The Commission has also collected information on whether unrestricted short selling affects actively-traded securities differently than thinly-traded securities (according to turnover) or affects large securities differently than small securities (according to market capitalization). In addition, the Commission has collected empirical evidence on the effect of price test restrictions on the level of short selling and options trading, the balance of trade, and the effect of disparate price test restrictions on different market centers trading the same securities. Finally, the Commission has collected information on whether the impact of Rule 10a–1 is different than the impact of former NASD Rule 3350 on short selling activity.

i. OEA Staff's Draft Summary Pilot Report

OEA analyzed the effects of the Pilot on the securities included in the Pilot by comparing short selling activity, volatility, price efficiency, and liquidity in those securities to a control group of securities.[51] In particular, OEA estimated how these securities changed from the four months prior to the Pilot to the first six months of the Pilot and compared the Pilot securities' changes to the control group securities' changes.[52] OEA's analysis was conducted separately for listed securities and Nasdaq Global Market securities. OEA's main empirical results are discussed below.

Because price test restrictions are meant to keep short sales from creating

[43] *See, e.g.*, letter from Racquel L. Russell, Esq., Branch Chief, Office of Trading Practices and Processing, Division of Market Regulation to George T. Simon, Esq., Foley & Lardner LLP (June 21, 2006); letter from James A. Brigagliano, Assistant Director, Division of Market Regulation, to Claire P. McGrath, Vice President and Special Counsel, AMEX (August 17, 2001). In granting such exemptions, the Commission noted that its decision was generally based on the fact that the market value of ETF shares would rise and fall based on changes in the net asset value of the component stocks in the particular index, and supply and demand. Each of the approvals for relief is conditioned on the ETF meeting certain enumerated conditions, either specific to certain products or included as part of a broader ''class exemption.''

[44] *See* letter from James A. Brigagliano, Assistant Director, Division of Market Regulation to Bernard L. Madoff, Chairman, Bernard L. Madoff Investment Securities LLC (February 9, 2001). This relief is strictly limited to the facilitation of customer market and marketable limit orders and is not available as a means of soliciting customer orders.

[45] *See, e.g.*, letter from Larry E. Bergmann, Senior Associate Director, Division of Market Regulation to Soo Yim, Wilmer, Cutler & Pickering (December 7, 2000); letter from James A. Brigagliano, Assistant Director to Andre E. Owens, Esq., Schiff Hardin & Waite (March 30, 2001); letter from James A. Brigagliano, Assistant Director, Division of Market Regulation to Sam Scott Miller, Esq., Orrick, Herrington & Sutcliffe LLP (May 11, 2001); letter from James A. Brigagliano, Assistant Director, Division of Market Regulation to William W. Uchimoto, Esq., Vie Institutional Services (February 12, 2003); letter from James A. Brigagliano, Assistant Director, Division of Market Regulation to Amy N. Kroll, Esq., Foley & Lardner (March 16, 2004). Among other things, the relief is limited to VWAP transactions that are arranged or ''matched'' before the market opens at 9:30 a.m. but are not assigned a price until after the close of trading when the VWAP value is calculated. The Commission granted the exemptions based, in part, on the fact that these VWAP short sale transactions appear to pose little risk of facilitating the type of market effects that Rule 10a–1 was designed to prevent. In particular, the pre-opening VWAP short sale transactions do not participate in, or affect, the determination of the VWAP for a particular security. Moreover, the Commission stated that all trades used to calculate the day's VWAP would continue to be subject to Rule 10a–1.

[46] *See, e.g.*, letter from James A. Brigagliano, Acting Associate Director, Division of Market Regulation, to Alan J. Reed, Jr., First Vice President and Director of Compliance, Instinet Group, LLC. (June 15, 2006) (granting Instinet modified exemptive relief from Rule 10a–1 for certain transactions executed through Instinet's Intraday Crossing System). These systems have requested relief from Rule 10a–1 because matches could potentially occur at a price below the last reported sale price. Due to the passive nature of pricing and the lack of price discovery, trades executed through the passive systems generally do not appear to involve the types of abuses that Rule 10a–1 was designed to prevent.

[47] *See* Letter from James A. Brigagliano, Assistant Director, Division of Market Regulation to Ira Hammerman, Senior Vice President and General Counsel, Securities Industry Association (July 18, 2005).

[48] We note, however, that each exemption from Rule 10a–1 was granted subject to conditions for relief designed to ensure that the trading activities contemplated by the requests for relief do not implicate the types of trading activity that Rule 10a–1 was designed to prevent.

[49] *See supra* n.6 and supporting text.

[50] *See* Regulation SHO Adopting Release at 48012–48013.

[51] OEA selected the securities to be included in the Pilot by sorting the 2004 Russell 3000, first by listing market and then by average daily dollar volume from June 2003 through May 2004, and then within each listing market, selecting every third company starting with the second. Because the selection process relied on average daily dollar volume, companies that had their Initial Public Offering (''IPO'') in May or June 2004, just prior to the Russell reconstitution, were not included. The securities in the control group came from the remainder of the 2004 Russell 3000 not included in the Pilot (excluding the IPOs in May or June 2004 and any securities added to the Russell 3000 after June 2004). *See* OEA Staff's Draft Summary Pilot Report at 22 (discussing the selection of securities included in the Pilot and the control group).

[52] Table 2 of the OEA Staff's Draft Summary Pilot Report shows that the Pilot stocks were statistically similar to the control group securities during the four months prior to the Pilot. *See id.* at 61.

excessive downward price pressure,[53] OEA studied whether price test restrictions dampen volatility. In particular, OEA studied whether price test restrictions dampen short-term intraday volatility associated with temporary order imbalances or daily volatility associated with price changes. OEA found that price test restrictions did not have a significant impact on daily volatility for either listed or Nasdaq Global Market securities, while price test restrictions appear to dampen intraday volatility, particularly in listed securities.[54]

OEA analyzed the Pilot data to determine what impact, if any, price test restrictions have on price efficiency. OEA found that the Pilot data provided limited evidence that price test restrictions distort a security's price.[55] In addition, the Pilot data did not provide any indication that there is an association between manipulative short selling, such as ''bear raids,'' and price test restrictions on short selling.[56]

Price test restrictions could inhibit the free movement of a security's price, and thereby, make markets less liquid. Price test restrictions could also induce more liquidity by forcing short sellers to engage in more passive trading strategies. To test these potential effects, OEA analyzed whether price test restrictions have an impact on liquidity by comparing quoted and effective spreads and quoted bid and ask depth for those securities contained in the Pilot and the control group. OEA found that price test restrictions resulted in an increase in quote depths. Liquidity levels, however, were unaffected by the removal of price test restrictions.[57]

An important element of the Pilot was to determine whether price test restrictions affect securities of varying size and trading volume differently. For the most part, OEA found that current price test restrictions affect securities to the same extent regardless of size or trading volume.[58] For example, OEA found that regardless of a security's size or trading volume, price test restrictions discouraged short selling.[59] In addition, OEA found that price test restrictions did not distort a security's price or affect its liquidity in a way that was related to the size of, or trading volume in, the security.[60] OEA did find, however, that a security's size or volume mattered with respect to routing decisions and volatility. For example, OEA found that for Nasdaq Global Market securities, in the absence of a price test, there was a more significant increase in Nasdaq's market share of short sales than in smaller Nasdaq Global Market securities.[61] Similarly, OEA found that price test restrictions dampen both transitory and permanent price volatility in smaller securities while amplifying it in larger securities.[62] With respect to intraday volatility, OEA found that there was an increase in volatility in smaller securities and a decline in volatility in larger securities in the absence of price tests. This evidence was much weaker for Nasdaq Global Market securities than listed securities.[63]

When reviewing the results of the Pilot, OEA analyzed whether price test restrictions represent an economically meaningful constraint on short selling and, thereby, may induce some traders to avoid short selling or reduce the size of their short positions. OEA found that for both listed and Nasdaq Global Market securities, price test restrictions reduce the volume of executed short sales relative to total volume, indicating that price test restrictions act as a constraint on short selling.[64] In neither market, however, did OEA find a significant difference in short interest positions.[65]

Because not all market centers that trade Nasdaq Global Market securities apply price test restrictions, OEA analyzed whether removing price test restrictions affects where short sales in Nasdaq Global Market securities are executed. OEA found that Nasdaq's share of short selling volume is negatively impacted by price test restrictions, suggesting that some short sellers route orders to avoid the application of a price test.[66]

In addition, OEA tested whether broker-dealers use the options markets to avoid application of a price test. OEA found no evidence, however, that price test restrictions on equity securities have any impact on options trading.[67]

OEA found that price test restrictions affect the ability of short sellers to demand liquidity by getting prompt execution of market orders. For listed Pilot securities, OEA found that the application of the tick test of Rule 10a–1 resulted in significantly fewer than 50% of transactions occurring on minus ticks or zero-minus ticks. In the absence of a tick test, OEA found that tick-to-tick changes in price were more balanced.[68] For Nasdaq Global Market securities, OEA found that the percentage of time the market was in a down bid state declined when the bid test was removed, suggesting that down bids occur more regularly when the bid test applies.[69] This result suggests that short selling under former NASD Rule 3350 might shorten the duration of upbids, reflecting the restriction that short sales can only hit upbids. Removing former NASD Rule 3350 resulted in longer lasting upbids.

In summary, OEA found little empirical justification for maintaining price test restrictions, especially for large securities. Despite changes in the displayed liquidity, all securities in the study had about the same realized liquidity and pricing efficiency whether or not price test restrictions apply. When OEA examined the differences between large and small securities, the most interesting pattern showed that price test restrictions actually amplify volatility in large securities while dampening it in small securities. While the majority of results do not suggest that removing price test restrictions would harm small securities, this volatility result is a potential concern.[70]

ii. Academic Studies and Regulation SHO Roundtable

To better inform the Commission regarding the effects of the Pilot and, in turn, of price test restrictions, we encouraged researchers to provide the Commission with their own empirical analyses of the Pilot. In response to this request, the Commission received the

[53] *See, e.g.*, supra n.3 and supporting text (providing that a primary reason that the Commission adopted Rule 10a–1 in 1938 was to restrict short selling in a declining market).

[54] *See infra* n.61–63 and supporting text.

[55] On the day the Pilot went into effect, listed Pilot securities underperformed listed control group securities by approximately 24 basis points. The Pilot and control group securities, however, had similar returns over the first six months of the Pilot. *See* OEA Staff's Draft Summary Pilot Report at 8.

[56] *See id.* at 48, 56.

[57] This conclusion is based on the result that changes in effective spreads were not economically significant (less than a basis point) and that the changes in the bid and ask depth appear not to affect the transaction costs paid by investors. Arguably, the changes in bid and ask depth appeared to affect the intraday volatility. However, OEA concludes that overall, the Pilot data does not suggest a deleterious impact on market quality or liquidity. *See id.* at 42, 56.

[58] *See id.* at Section IV.E.

[59] *See id.* at 52.

[60] *See id.* at 52–53. The report finds that former NASD Rule 3350 seems to generate statistically lower effective spreads for large or more active Nasdaq Global Market securities. However, the difference does not appear to be economically meaningful.

[61] *See id.* at 52.

[62] *See id.* at 53.

[63] *See id.* at 43, 53.

[64] *See id.* at 35.

[65] *See id.*

[66] *See id.* at 36.

[67] *See id.* at 37.

[68] *See id.* at 39.

[69] *See id.*

[70] *But, c.f.,* n.80 and supporting text (noting that one Academic Study did not document that volatility was affected by the size of the security).

Academic Studies.[71] In addition, the Commission held the Regulation SHO Roundtable that focused on the empirical evidence learned from the Pilot.[72] The Academic Studies and Regulation SHO Roundtable contained a variety of observations, which we considered in determining whether or not to propose removal of price test restrictions.

Generally, the Academic Studies and Regulation SHO Roundtable panelists, who were all economists, urged removal of short sale price test restrictions; although they also noted some market quality benefits of these restrictions. The results of the Academic Studies on volatility and price efficiency were largely consistent with the results in the OEA Staff's Draft Summary Pilot Report. However, the conclusions regarding liquidity differed. For example, some of the Academic Studies found that price test restrictions result in narrower spreads than if these restrictions did not apply.[73] Similarly, some Academic Studies found that bid and ask depths are greater when short sale price test restrictions apply.[74] Thus, according to some of the Academic Studies the Commission received, the Pilot results indicate that removal of price test restrictions may result in a decrease in liquidity.[75] Several panelists at the Regulation SHO Roundtable questioned whether this result, that is, the decrease in liquidity after the removal of price test restrictions, is economically meaningful.[76]

In addition, we note that only one Academic Study examined whether Rule 10a–1 has a different impact on small securities than on large securities and found that the significance of the impact of the removal of Rule 10a–1 at times depended on the size (that is, market capitalization) of the securities examined.[77] While the results of this Academic Study suggest that Rule 10a–1 can have a larger impact on small securities, the specific results are not consistent with the results described in the OEA Staff's Draft Summary Pilot Report described above. For example, although OEA found the effect of Rule 10a–1 on short selling volume did not depend on size, this Academic Study found that removal of Rule 10a–1 resulted in a significant increase in short selling volume only in smaller securities.[78] Similarly, with respect to the widening of spreads following the removal of Rule 10a–1, this Academic Study found that the widening of spreads was more pronounced for smaller rather than larger securities, while OEA documents no relationship between size and spreads in the OEA Staff's Draft Summary Pilot Report.[79] Finally, unlike the OEA Staff's Draft Summary Pilot Report, this Academic Study did not document that volatility was affected by the size of the security.[80] Overall, when considering the results in this Academic Study and the OEA Staff's Draft Summary Pilot Report, the evidence regarding the application of price test restrictions to small securities is inconsistent. While there is some evidence supporting the application of price test restrictions to smaller securities, the evidence is not strong enough to warrant its continuation in any subset of securities or the expansion of price test restrictions to securities currently not covered by any price test restrictions.

Consistent with the results in the OEA Staff's Draft Summary Pilot Report, we note that some Academic Studies found that the significance of the impact of the removal of price test restrictions at times depended on which price test restrictions applied.[81] In particular, the magnitude of the changes from removing Rule 10a–1 are larger than the changes from removing former NASD Rule 3350, suggesting that Rule 10a–1 is more restrictive.

Two of the Academic Studies commented on whether the original rationale for adopting Rule 10a–1 in 1938 still applies in today's market. For example, one Academic Study noted that it found ''little evidence to support the argument that price tests are needed to prevent short sellers from driving prices down from either shorting 'successively lower prices' or 'exhausting all remaining bids at one price level, causing successively lower prices.' '' [82] Another Academic Study noted that there is no empirical support for the rationale underlying the adoption of the tick test that unfettered short selling would produce significant volatility.[83] In addition, nine of the twelve panelists in the Regulation SHO Roundtable explicitly supported removing price test restrictions,[84] though a few of the nine noted a lack of evidence for removing price test restrictions from small securities.[85] The Commission considered these opinions in deciding whether to propose

[71] *See supra* n.12. The Commission notes that although these Academic Studies examined the Pilot data, the Academic Studies vary with respect to the time periods and the composition of the sample securities examined and the methodologies used. Thus, the Commission realizes that differences in findings among the Academic Studies may be due, in part, to the different approaches used for each of the Academic Studies.

[72] *See supra* n.13 (providing a url link to the transcript of the Regulation SHO Roundtable).

[73] *See, e.g.,* Wu at 5, 18. As an explanation for this finding, Wu notes that price test restrictions require short sellers to act as liquidity suppliers because price test restrictions might require short sellers to place more limit orders on the ask side. Wu notes that in the absence of price test restrictions, short sellers demand liquidity by being able to place market orders without restrictions. *See id.; see also,* Alexander and Peterson at 19; Diether, Lee and Werner at 19–23. Although Diether, Lee and Werner find that spreads widen when price test restrictions do not apply for NYSE-listed securities, this study also states that they do not interpret wider spreads as evidence that price tests are effective. *See id.* at 6, 31.

[74] *See, e.g.,* Alexander and Peterson at 19–20 (finding smaller bid and ask depths for NYSE-listed securities included in the Pilot). Alexander and Peterson suggest that bid depth declines because short sale market orders can execute immediately, and when they do, depth at the bid is reduced. As an explanation for the decline in ask depth, Alexander and Peterson suggest that in the absence of short sale price test restrictions, market orders no longer turn into limit orders and, therefore, contribute to the ask depth. *See id.; see also* Diether, Lee and Werner at 20. Diether, Lee and Werner note that the suspension of price tests result in wider spreads because price tests ''* * * distort how people trade. Specifically, NYSE short sale orders are treated as liquidity supplying orders so as to comply with the Uptick Rule. As a result, short sellers forgo the option-value of their order flow. Moreover, their opportunities to trade in a timely manner are curtailed. The fact that short-sellers are unable to use marketable orders increases the costs of trading for buyers relying on passive pricing strategies (limit orders). In addition, short-sellers effectively ''penny'' long-sellers using limit orders. Thus, the regulation causes redistribution of welfare away from short-sellers and passive buyers and (long) sellers in favor of active buyers.'' *Id.* at 31.

[75] *See, e.g.,* Alexander and Peterson at 2, 20 (providing that the studies' results appear to indicate a decrease in liquidity associated with the removal of price tests). Alexander and Peterson note, however, that ''while it is tempting to conclude that price tests improve liquidity, it is more appropriate to view them as distorting liquidity.'' *Id.* at 27.

[76] *See* Roundtable Transcript at 50, 93, 99, 114, 151.

[77] *See* Wu.

[78] *See id.* at 4, 14 (finding that the increase in short selling volume occurred only in smaller NYSE-listed securities. Wu found that larger NYSE-listed securities did not experience a significant change in short selling volume).

[79] *See id.* at 5, 19 (finding that smaller NYSE-listed securities experience the most pronounced widening of spreads, while larger NYSE-listed securities saw no changes in spreads. Wu noted that an explanation for this result might be that small securities are harder to sell short and are more sensitive to liquidity shocks).

[80] *See id.* at 16, 20.

[81] *See e.g.,* Alexander and Peterson at 3 (stating that Nasdaq's bid test seems to be relatively inconsequential); *see also,* Diether, Lee and Werner at 30 (stating that this Academic Study's results show that the ''NYSE Uptick Rule has a very different effect on the trading strategies of short-sellers compared to the Nasdaq bid-price rule'').

[82] *See* Alexander and Peterson at 18.

[83] *See* Diether, Lee and Werner at 23.

[84] Prof. Werner, Prof. Irvine, Prof. Alexander, Prof. Harris, Prof. Kyle, Prof. Lamont, Prof. Lehmann, Dr. Lindsey and Dr. Sofianos. *See* Roundtable Transcript at 48, 49, 72, 97, 100, 104, 111, 113, 119. The remaining panelists did not explicitly state an opinion regarding removing price test restrictions.

[85] Dr. Sofianos and Dr. Lindsey. *See* Roundtable Transcript at 117, 119, 123.

removing price test restrictions for all securities.

III. Discussion of Proposed Amendments

A. Removal of Price Test Restrictions

We are proposing to remove the tick test of Rule 10a–1 [86] and add Rule 201 of Regulation SHO [87] to provide that no price test, including any price test of any SRO, shall apply to short sales in any security. In addition, we are proposing to prohibit any SRO from having a price test.

Price test restrictions have applied to short sales for almost 70 years. Current short sale regulation is disparate, however, with different price tests applying depending on the type of security being sold and where the short sale order is executed. Rule 10a–1's tick test applies only to short sale transactions in securities listed on a national securities exchange, other than Nasdaq securities, whether the transaction is effected on an exchange or otherwise. The NASD's bid test applies only to short sale transactions in Nasdaq Global Market securities reported to a NASD facility. Nasdaq's bid test applies only to trades in Nasdaq Global Market securities on Nasdaq. In addition, no price test applies to short sales of Nasdaq securities executed on other exchanges trading Nasdaq securities. This disparate regulation has the potential for confusion and compliance difficulties. In addition, we are concerned that this current market structure could competitively disadvantage investors because short sale orders obtain different treatment depending on where the orders are executed.

We also note that small or more thinly-traded securities, such as Nasdaq Capital Market securities and those quoted on the OTCBB and pink sheets continue to be unrestricted by any price test, while large or more actively-traded securities remain subject to a price test. Continuing to impose a price test on only larger securities or those that are more actively-traded would be anomalous, given the greater difficulty of manipulating the price of a security as market capitalization and trading volume increase.[88]

Moreover, we believe that the increasing number of requests for relief from the provisions of Rule 10a–1 that the Commission has granted in recent years for a wide range of short selling activities have limited the applicability of the rule's price restrictions, potentially created an unlevel playing field among market participants and has indicated to us that current price test restrictions have not kept pace with the wide variety of trading strategies and systems currently used in the marketplace. Rule 10a–1 was adopted in 1938 and its restrictions on short selling have remained essentially unchanged since that time. Thus, we believe that this is an appropriate time to propose amendments that would provide for a more consistent and simpler approach to short sale regulation.[89]

In addition, based on the Pilot Results, we believe that removal of current price test restrictions would not have a significant impact on market quality. The Pilot Results found little evidence suggesting that the removal of the price test restrictions would harm market volatility, price efficiency, or liquidity. In fact, the empirical results indicate that the observed effect of a price test may have a larger negative than positive impact on markets. For example, the OEA Staff's Draft Summary Pilot Report suggests that price test restrictions result in decreased short selling volume.[90] Short selling provides the marketplace with important benefits such as liquidity and price efficiency. The OEA Staff's Draft Summary Pilot Report indicates that price test restrictions may limit these benefits. In addition, the OEA Staff's Draft Summary Pilot Report suggests that price test restrictions result in market participants routing orders to avoid application of price test restrictions,[91] resulting in a loss of trading volume for market centers that have a price test. Other market centers may use the absence of a price test to their advantage to attract order flow away from market centers that have a price test. Thus, current price test regulation may competitively disadvantage certain investors because their short sale orders may or may not be subject to price test restrictions depending on which market center the order is executed.

As noted above, a primary reason that the Commission adopted Rule 10a–1 in 1938 was to restrict short selling in a declining market.[92] Although there is concern regarding the possibility of manipulation using short sales, we note that the OEA Staff's Draft Summary Pilot Report did not evidence an increase in manipulative short selling during the time period studied.[93] In addition, we believe that the high levels of transparency and sophisticated surveillance for securities traded on exchanges and other regulated markets would allow manipulative or abusive short selling activity to be detected and pursued in the absence of price test restrictions. Moreover, the general anti-fraud and anti-manipulation provisions of the federal securities laws would continue to prohibit trading activity designed to improperly influence the price of a security.[94]

In addition, after a review of the Pilot Results, we believe that the empirical analyses not only provide support for removing price test restrictions for either large or actively-traded securities, but also do not provide strong support for extending a price test to either small or thinly-traded securities. For example, the OEA Staff's Draft Summary Pilot Report discusses whether the removal of price test restrictions affects thinly- and actively-traded securities (according to turnover) differently.[95] Generally, the results indicate that neither Rule 10a–1 nor former NASD Rule 3350 affects thinly-traded stocks differently than actively-traded stocks.

The OEA Staff's Draft Summary Pilot Report and one Academic Study also discuss whether the removal of price

[86] 17 CFR 240.10a–1.

[87] *Id.* at 242.201.

[88] *See* Exchange Act Release No. 42037 (October 20, 1999), 64 FR 57996 (October 28, 1999) (noting that some of the Commission's anti-manipulation rules assume that highly liquid securities are less susceptible to manipulation and abuse than other securities).

[89] We note that in 2003, in the Regulation SHO proposing release, we proposed a price test that, if adopted, would have required that all short sales in covered securities be effected at a price at least one cent above the consolidated best bid at the time of execution. Additionally, the Commission sought comment on an alternative price test that would allow short selling at a price equal to or above the consolidated best bid if the current best bid was above the previous bid (i.e. an upbid). Under this alternative, short selling would be restricted to a price at least one cent above the consolidated best bid if the current best bid was below the previous bid (i.e. a downbid). *See* Exchange Act Release No. 48709 (October 28, 2003), 68 FR 62972 (November 6, 2003) (the ''Regulation SHO Proposing Release''). Based on the comments received to that proposal, however, the Commission determined to defer consideration of the proposed uniform bid test until after completion of the Pilot. *See* Regulation SHO Adopting Release at 48010. Although a uniform bid test similar to that proposed in the Regulation SHO Proposing Release would also result in consistent price test regulation, based on our review of the applicability of current price test restrictions, in particular, the need for such price test restrictions in light of today's market structure and the Pilot Results, we do not believe that any price test restrictions are currently necessary.

[90] *See* OEA Staff's Draft Summary Pilot Report at 35.

[91] *See id.* at 36.

[92] *See supra* n.3.

[93] *See* OEA Staff's Draft Summary Pilot Report at 47–51 (discussing the Pilot data in connection with ''bear raids''). We note that the OEA Staff's Draft Summary Pilot Report did not evaluate the impact of short selling activity in connection with extraordinary events, such as initial or secondary public offerings, mergers and acquisitions or private placements.

[94] *See supra* n.16.

[95] *See* OEA Staff's Draft Summary Pilot Report Section VI.E. at 51–54 and Wu at 4–5, 19–20.

test restrictions affect small and large stocks differently (according to market capitalization). These studies provide inconsistent results regarding whether Rule 10a–1 has a larger impact on the liquidity and volatility of smaller rather than larger securities. In addition, several Regulation SHO Roundtable panelists asserted that price test restrictions are unnecessary in smaller stocks because these stocks are harder to borrow and, therefore, are less likely to be sold short.[96]

Overall, because the results suggest that price test restrictions affect thinly-traded securities no differently than actively-traded securities and the results are inconsistent regarding the effects of price test restrictions on large and small stocks, we believe the current evidence is not strong enough to warrant a proposal to continue imposing price test restrictions on only a subset of either small or thinly-traded securities, or to extend price test restrictions to securities currently not subject to any price test restrictions. We request comment, however, regarding whether or not price test restrictions should apply to securities not currently covered by any price test restrictions.

We also note that current price test restrictions impose costs on market participants in terms of time and technology. For example, to comply with the tick test of Rule 10a–1, short sellers may incur additional transactional costs as they await a proper tick for execution. Moreover, in some cases, the tick test of Rule 10a–1 can create potential conflicts with best execution responsibilities (although the Commission has provided relief to minimize these instances).[97]

In addition, we are aware that in a decimals environment, with penny or even sub-penny price points and narrow spreads, a short seller can await or create an uptick with minimal burden. On the other hand, in a decimals environment, the tick test of Rule 10a–1 may be triggered by a change in price that reflects an extremely small decrease in the price of the security. We do not believe that a price change as small as one penny per share results in the type of market impact that Rule 10a–1 was designed to prevent. Rather, we believe that current price test restrictions may have become unduly burdensome and are possibly ill-suited to present and future markets.

Thus, for all these reasons, we believe that this is an appropriate time to modernize and simplify price test regulation by proposing to remove Rule 10a–1's tick test and add Rule 201(a) of Regulation SHO to provide that no price test, including any price test of any SRO, shall apply to short sales in any securities.

In addition, we are proposing to add Rule 201(b) of Regulation SHO that would provide that no SRO shall have a price test. A primary goal of the proposed amendments is to achieve greater regulatory consistency and simplification. To date, we have permitted SROs to adopt their own price tests. As noted above, this has resulted in a regulatory environment that applies different tests to securities trading in different markets, and even to the same security trading in different markets. We believe that by proposing to require that no SRO shall have its own price test, the goals of regulatory simplification and consistency would be better met.

We are aware, however, that some SROs may want to maintain or adopt a new price test. For example, we are aware that previously, SROs have adopted price tests to attract issuers concerned about the potential effects of short selling on the issuer's stock price. Thus, we solicit comment regarding whether we should allow SROs to have their own price tests.

Regardless of whether or not we adopt the proposed amendments, however, the Commission and the SROs will continue to monitor for, and pursue, abusive trading activities. In addition, as already noted, the general anti-fraud and anti-manipulation provisions of the federal securities laws will continue to prohibit trading activity that improperly influences the price of a security.[98]

Request for Comment

The Commission seeks comment generally on all aspects of the proposed amendments to Rule 10a–1 and Regulation SHO. In addition, we seek comment on the following:

- The proposed amendments state that no ''short sale price test'' shall apply to short sales in any security. Should we define the term ''short sale price test'' for purposes of these amendments?
- Some SROs have adopted price tests to attract issuers concerned about the potential effects of short selling on the issuer's stock price. The proposed amendments would prohibit any SRO from having its own price test. If the Commission removes Rule 10a–1, should the Commission continue to allow the SROs to adopt their own price tests? Should the Commission require uniformity with respect to any SRO price tests? Should any such SRO price tests be limited to certain securities? What would be the costs and benefits of allowing the SROs to adopt their own price tests?
- We request comment from issuers regarding their views of the impact of the proposed amendments on their securities. Are issuers concerned that unrestricted short selling could result in undue downward price pressure on their company's stock? Are issuers concerned that the proposed amendments could result in manipulative short selling of their company's stock? Alternatively, would these concerns be mitigated because the general anti-fraud and anti-manipulation provisions of the federal securities laws would continue to prohibit trading activity designed to improperly influence the price of a security? Please submit any available empirical evidence of manipulation of pilot stocks.
- To what extent does the tick test of Rule 10a–1 impose market costs on traders desiring to sell short? For example, if the removal of price test restrictions were to result in wider spreads, could this result in higher transaction costs for all traders? What would be the impact on investors? Would the removal of the price test restrictions result in shifting higher trading costs from short sellers to other traders? To what extent would such costs justify any benefits of removing price test restrictions?
- Would the removal of price tests benefit the markets by allowing investors to more freely short sell potentially over-valued securities so that the security's price more accurately reflects its fundamental value? Would the removal of price tests lead to benefits such as a reduction in costs associated with systems and surveillance costs? What would be the costs to the markets of removing price

[96] *See* Roundtable Transcript at 122–130.

[97] For example, as previously described by the Commission, ''in order to resolve a potential conflict between the tick test and the quote rule, the Commission adopted (e)(5)(ii) to permit market makers to execute transactions at their offer following a trade-through, and (e)(11) to permit non-market makers to effect a short sale at a price equal to the price associated with their most recently communicated offer up to the size of that offer so long as the offer was at a price, when communicated, that was permissible under Rule 10a–1. The (e)(11) exception was added in response to several comments that, in addition to orders for their own account, specialists and other floor members also often represent as part of their displayed quotations orders of other market participants (*e.g.*, public agency orders or proprietary orders of non-market makers) that also might be ineligible for execution under Rule 10a–1 following a trade-through in another market.'' Exchange Act Release No. 48709 (October 28, 2003), 68 FR 62972, 62986 (November 6, 2003).

[98] In addition, as noted previously, this proposal would not amend any short selling regulations other than those related to price tests. *See supra* n.15.

tests? Please provide any quantified evidence available.

• To what extent does the tick test of Rule 10a–1 affect the ability to sell short in a decimals environment? Please explain any difficulties of complying with the tick test or any other price test in a decimals environment. In light of all the exemptions from, and exceptions to, Rule 10a–1, how significant a test is it? On what types of trading activities does Rule 10a–1 have a significant or meaningful impact? Similarly, in light of the exceptions to NASD Rule 5100 and Nasdaq Rule 3350, how significant are these tests? On what types of trading activities do NASD Rule 5100 and Nasdaq Rule 3350 have a significant or meaningful impact? Please explain.

• To what extent, if any, is retention of price test restrictions valuable for investor confidence to commit capital to the markets?

• Is the tick test in Rule 10a–1 appropriate for some securities but not all securities? If the Commission were to maintain a price test for some securities, which types of securities should be subject to a price test?

• We note that in 2003, in the Regulation SHO Proposing Release, we proposed adopting a price test using the consolidated best bid as a reference point for permissible short sales.[99] Should the Commission adopt a new price test, such as a uniform bid test, that would replace all current price tests, including those of any exchange or national securities association? If so, should the new price test apply to all securities, including those not currently subject to a price test? What should be the requirements of any new price test?

• If the Commission were to maintain the tick test contained in Rule 10a–1, should the Commission amend the tick test to apply to all markets or securities equally?

• If the Commission were to maintain the tick test contained in Rule 10a–1, which, if any, of the exceptions contained in paragraph (e) of Rule 10a–1 should the Commission retain? Please explain. Should the Commission include exceptions not currently in Rule 10a–1? What should those exceptions address?

• If the Commission were to retain the tick test contained in Rule 10a–1, should the Commission codify all the exemptions the Commission has previously granted from this rule? If not all the exemptions, which exemptions should the Commission codify?

• NASD Rule 5100 and Nasdaq Rule 3350 contain exceptions for bona-fide market making. If the Commission were to retain the tick test contained in Rule 10a–1 or adopt a new price test, should such price test include an exception for bona-fide market making? If the Commission were to continue to allow for a market maker exception in NASD Rule 5100 or Nasdaq Rule 3350 or adopt a price test that contains a market maker exception, should the Commission limit the applicability of the exception? How should it be limited? What would be the purpose of such limitations?

• We request specific comment regarding the importance of retaining a market maker exception, for example, with respect to liquidity, price efficiency, market depth, speed of execution and flexibility for capital commitment.

• Should the Commission retain a price test for times during which there are unusual market declines? If so, please discuss what type of price test should be retained and under what types of circumstances such a price test should be applied?

• To what extent, if at all, would removal of price test restrictions impact the ability of short sellers to be liquidity providers versus liquidity demanders?

• If the Commission were to maintain the current tick test of Rule 10a–1 or adopt a new price test, should the price test apply only during regular market hours or should the price test apply regardless of when trades occur? What are the benefits and costs of applying price tests in the after-hours market?

• To what extent does real-time access to information regarding issuers, their respective industries and other influences on a security's price reduce the ability to manipulate prices in declining markets through short selling?

• To what extent is a price test an impediment to trading in a down market? Is it preferable to allow unimpeded short selling in a down market? Are there circumstances where such trading should not be permitted?

• Would removal of all price test restrictions result in the markets being truly representative of what is a fair price for an individual security?

• Are there any technical or operational challenges that would arise in complying with the proposal if the Commission were to adopt the proposal?

• How much would the proposed amendments affect specific compliance costs or other costs for small, medium and large entities (brokers, dealers, and SROs)?

• Would the proposed amendments create additional costs for, or otherwise impact, short sellers, issuers, investors, or others?

• Should we provide a compliance date, separate from an effective date, if the Commission were to adopt the proposed amendments? If yes, please explain why a compliance date would be appropriate and give suggestions as to how long a compliance period would be needed.

• Nine reporting markets have been making public information on short selling transactions.[100] This information was vital to the study of the Pilot. Would it be in the public interest to request that the markets continue to release this information? In particular, would it improve transparency of short selling? Would it help the Commission and the markets monitor for potential abuses if the Commission were to approve the removal of price tests? How costly would continuing to produce the data be? Are there any less costly alternatives to the current information being released by the markets?

• If the Commission were to adopt the proposed amendments, the Commission and the SROs would continue to monitor for manipulative activity. Should the Commission ask the SROs to submit periodic reports regarding the effects of the removal of price tests at regular intervals, for example, on a semi-annual or annual basis? What would be the costs associated with such reporting?

• Is the data from the Pilot sufficient for the purposes for which the Commission is using it? Is the data reliable? Are there any limitations in the Pilot Results that call the results and conclusions into question?

• The Pilot created a temporary rule amendment that affected a subset of securities trading in the market. To what extent would a permanent rule amendment applied to all stocks affect the market differently than the Pilot?

B. Removal of ''Short Exempt'' Marking Requirement

We are proposing to amend Rule 200(g) of Regulation SHO[101] to remove the requirement that a broker-dealer mark a sell order of an equity security as ''short exempt'' if the seller is relying on an exception from the tick test of Rule 10a–1, or any price test of any exchange or national securities association.

Rule 200(g) of Regulation SHO provides that a broker-dealer must mark all sell orders of any security as ''long,'' ''short,'' or ''short exempt.''[102] Further, Rule 200(g)(2) of Regulation SHO provides that a short sale order must be

[99] *See supra* n.89.

[100] *See supra* n.11.

[101] 17 CFR 242.200(g).

[102] *See id.*

marked ''short exempt'' if the seller is ''relying on an exception from the tick test of 17 CFR 240.10a–1, or any short sale price test of any exchange or national securities association.'' [103] The ''short exempt'' marking requirement provides a record that short sellers are availing themselves of the various exceptions to, or exemptions from, the application of the restrictions of Rule 10a–1 or of any price test of any exchange or national securities association. However, if the Commission were to adopt the proposals to remove all price test restrictions, as well as prohibit any price test by any SRO, the ''short exempt'' marking requirement would no longer be applicable. Thus, we are proposing to remove this marking requirement. Broker-dealers would, however, continue to be required to mark sell orders as either ''long'' or ''short'' in compliance with Rule 200(g).[104]

Request for Comment

- If the Commission were to adopt the proposal to remove the ''short exempt'' marking requirement of Rule 200(g) of Regulation SHO, would it be sufficient to require broker-dealers to mark all sell orders of any equity security as either ''long'' or ''short''? Under what circumstances, if any, would broker-dealers need to mark sell orders other than as ''short'' or ''long''?
- To facilitate the application of Rule 10a–1, NASD Rule 5100, and Nasdaq Rule 3350, market makers and specialists receive information allowing them to distinguish short sales from other sales. In other words, the information on whether an order is marked ''long,'' ''short,'' or ''short exempt'' is made transparent to market makers and specialists but not to other market participants or the public. In the absence of price test restrictions, would the marking of sell orders need to be transparent to market makers and specialists? Would there be any systems or market quality costs/benefits associated with not revealing this information to specialists and market makers?
- Would there be any costs or burdens associated with removing the ''short exempt'' marking requirement of Rule 200(g) of Regulation SHO? If so, please explain.

IV. General Request for Comment

The Commission seeks comment generally on all aspects of the proposed amendments to Rule 10a–1 and Regulation SHO. Commenters are requested to provide empirical data to support their views and arguments related to the proposals herein. In addition to the questions posed above, commenters are welcome to offer their views on any other matter raised by the proposed amendments to Rule 10a–1 and Regulation SHO. With respect to any comments, we note that they are of the greatest assistance to our rulemaking initiative if accompanied by supporting data and analysis of the issues addressed in those comments and by alternatives to our proposals where appropriate.

V. Paperwork Reduction Act

The proposed amendments to Regulation SHO would impose a ''collection of information'' within the meaning of the Paperwork Reduction Act of 1995;[105] however, the collection of information is covered by the approved collection for Exchange Act Rule 19b–4.[106] Proposed Rule 201(a) of Regulation SHO provides that no price test, including any price test of any SRO, shall apply to short sales in any security. In addition, proposed Rule 201(b) of Regulation SHO would prohibit any SRO from having a price test. Thus, to the extent that any SRO currently has a price test, that SRO would be required to amend its rules to comply with these proposed amendments to Regulation SHO. Any such amendments would need to be filed with the Commission as proposed rule changes, pursuant to Section 19(b) of the Exchange Act [107] and Rule 19b–4 thereunder. This collection of information, however, would be collected pursuant to Exchange Act Rule 19b–4 and, therefore, would not be a new collection of information for purposes of the proposed amendments.

VI. Consideration of Costs and Benefits of Proposed Amendments to Rule 10a–1 and Regulation SHO

The Commission is considering the costs and benefits of the proposed amendments to Rule 10a–1 and Regulation SHO. The Commission is sensitive to these costs and benefits, and encourages commenters to discuss any additional costs or benefits beyond those discussed here. In particular, the Commission requests comment from all market participants regarding the costs and benefits of unrestricted short selling activity. The Commission also requests comment regarding the costs associated with complying with the proposed amendments, if the Commission were to adopt the proposed amendments. Specifically, we seek comment regarding any costs relating to the removal of price test restrictions adopted by the SROs. In addition, the Commission requests comment on the potential costs for any modification to both computer systems and surveillance mechanisms and for information gathering, management, and recordkeeping systems or procedures, as well as any potential benefits resulting from the proposals for registrants, issuers, investors, brokers or dealers, other securities industry professionals, regulators, and other market participants. Commenters should provide analysis and data to support their views on the costs and benefits associated with the proposed amendments to Rule 10a–1 and Regulation SHO.

A. Removal of Price Test Restrictions

1. Benefits

The proposed amendments would remove the tick test of Rule 10a–1 and provide that no SRO shall have a price test. We believe that this is an appropriate time to propose removing existing price test restrictions because the current regulation is disparate, potentially creates an unlevel playing, allows for regulatory arbitrage and has not kept pace with the types of trading systems and strategies currently used in the marketplace. In addition, today's markets are characterized by high levels of transparency and regulatory surveillance. These characteristics greatly reduce the risk of undetected manipulation and permit regulators to monitor for the types of activities that Rule 10a–1 and other price tests are designed to prevent.

The Commission believes that removal of all price test restrictions would benefit market participants by providing market participants with the ability to execute short sales in all securities in all market centers without regard to price test restrictions. In addition, market centers would be competing for executions on a level playing field because they would not be affected by the existence or non-existence of price test restrictions.

The Commission believes that removing price test restrictions would be preferable to applying different tests in different markets, which can require market participants to apply different rules to different securities depending on which market the trade is executed. Thus, the proposed amendments would reduce confusion and compliance difficulties for market participants.

[103] *See id.* at 242.200(g)(2).

[104] *See id.* at 242.200(g).

[105] 44 U.S.C. 3501 *et seq.*

[106] 17 CFR 240.19b–4.

[107] 15 U.S.C. 78s(b).

We also believe that the proposed amendments would benefit exchanges and other market centers because market participants would no longer be able to select a market on which to execute a short sale based on the applicability of price test restrictions. The proposed amendments would remove a competitive disadvantage purportedly experienced by some market centers because market participants would no longer route orders to avoid application of a market center's price test. Nor would market centers that do not have a price test be able to use that factor to attract order flow away from market centers that have a price test.

In addition, the proposed amendments would result in benefits associated with systems and surveillance mechanisms because these systems and mechanisms would no longer need to be programmed to account for price test restrictions based on last sale and last bid information. We also note that in the absence of price test restrictions, new staff (compliance personnel, broker-dealers, etc.) would no longer need to be trained regarding rules relating to price tests. Over the long run, we believe this would likely lead to decreased training and compliance costs for market participants.

We are aware that the degree of restrictiveness of a price test may affect how well a security's price represents a company's true financial value. We seek comment regarding whether the absence of price test restrictions would result in prices that are a better reflection of a company's true financial value.

In addition, we seek estimates and views regarding the benefits to particular types of market participants as well as any other benefits that may result from the adoption of the proposed amendments. Please provide any specific data.

We also believe that the proposed amendments would lead to a reduction in costs because market participants and their lawyers, both in-house and outside counsel, would no longer need to make either informal (phone calls) or formal (letters) requests for exemptions from Rule 10a–1. We request empirical data to quantify this benefit.

We anticipate that broker-dealers, including specialists and market makers in listed securities, could provide greater liquidity in the marketplace because the absence of price test restrictions would make it easier for market participants to fill orders. In addition, an increase in trading volume resulting from the removal of price test restrictions could result in increased price efficiency because prices may more fully reflect both buy and sell interest.

We solicit comment on any additional benefits that could be realized if the Commission were to adopt the proposed amendments, including both short-term and long-term benefits. We solicit comment regarding other benefits to market efficiency, pricing efficiency, market stability, market integrity, and investor protection.

2. Costs

In order to comply with the Pilot when it became effective on May 2, 2005, market participants needed to modify their systems and surveillance mechanisms to exempt those securities included in the Pilot from all price test restrictions. The Pilot exempts a select group of securities from price test restrictions during regular trading hours. Between the close of the consolidated tape and the open of the consolidated tape on the following day, however, all equity securities are exempted from price test restrictions. Thus, we believe that the infrastructure necessary to comply with the proposed amendments should, for the most part, already be in place. Any additional changes to the infrastructure should be minimal. In addition, because the proposed amendments would remove all price test restrictions, rather than for example, imposing a modified price test, we believe that further changes to systems and surveillance mechanisms or procedures should be relatively minor. Nor do we believe that market participants would need to incur costs to purchase new systems, or increase staffing based solely on the implementation of the proposed amendments.

In addition, the proposed amendments would remove a restriction on trading activity with which market participants must currently monitor for compliance. Thus, we do not believe that the proposed amendments would impose additional compliance costs. Moreover, we believe that any costs incurred to modify, establish or implement existing or new supervisory and compliance procedures due to the proposed amendments would be minimal because market participants should currently have in place supervisory or compliance procedures to monitor for trading activity that current price test restrictions are designed to prevent.

We seek comment as to how the proposed amendments would affect costs for market participants. We believe that market participants, including broker-dealers and SROs, would incur costs related to systems changes to computer hardware and software, reprogramming costs, or surveillance costs that could be necessary to comply with this proposed rule. We believe that these costs would be on a one-time basis. We solicit comment on these costs as well as whether these costs would be incurred on a one-time or ongoing basis.

We also note that if the Commission were to adopt the proposed amendments, all SROs that have adopted price test restrictions would have to remove such price tests. As discussed above, the NASD and Nasdaq have their own bid tests that, under the proposed amendments, would no longer be applicable. In addition, some exchanges have adopted short sale rules in conformity with the provisions of the tick test of Rule 10a–1, which also would no longer be applicable if the Commission were to adopt the proposed amendments. We believe the SROs could incur costs associated with the processes to remove such rules, including filing rule changes with the Commission, as well as reprogramming systems designed to enforce these rules. We request comment regarding these costs, including costs relating to preparing and filing any necessary rule changes with the Commission.

Based on the Pilot Results, we believe that removing the tick test of Rule 10a–1 and providing that no price test, including any price test of any SRO, shall apply to short sales in any security, has the potential to increase transaction costs, decrease quoted depth and increase intraday price volatility, particularly in small stocks. The Pilot Results suggest, however, that these changes are small in magnitude and would not significantly increase costs or reduce liquidity.

We seek comment regarding the following specific costs:

- What are the economic costs of removing the tick test of Rule 10a–1 and any price test of any SRO for all securities? How would this affect the liquidity and transaction costs of equity securities? How would this affect the quoted depth and the price volatility of equity securities? Would the effects be more severe for liquid or illiquid securities? Would the effects be more severe for small or large securities?
- Are there any other costs associated with the proposal?
- How much would the removal of price test restrictions affect the compliance costs for small, medium, and large market participants (*e.g.*, personnel or system changes)? We seek comment on the costs of compliance that could arise as a result of these proposed amendments. For instance, to

comply with the proposed amendments, would market participants be required to:

• Purchase new systems or implement changes to existing systems? Would changes to existing systems be significant? What would be the costs associated with acquiring new systems or making changes to existing systems? How much time would be required to fully implement any new or changed systems?

• Increase staffing and associated overhead costs? Would market participants have to hire more staff? How many, and at what experience and salary level? Could existing staff be retrained? What would be the costs associated with hiring new staff or retraining existing staff? If retraining were required, what other costs could be incurred, *e.g.*, would retrained staff be unable to perform existing duties in order to comply with the proposed amendments? Would other resources need to be re-dedicated to comply with the proposed amendments?

• Implement, enhance or modify surveillance systems and procedures? Please describe what would be needed, and what costs would be incurred.

• Establish and implement new supervisory or compliance procedures, or modify existing procedures? What would be the costs associated with such changes? Would new compliance or supervisory personnel be needed? What would be the costs of obtaining such staff?

• Are there any other costs that may be incurred to comply with the proposed amendments?

B. Removal of ''Short Exempt'' Marking Requirement

1. Benefits

The proposed amendment would remove the ''short exempt'' marking requirement of Rule 200(g) of Regulation SHO.[108] Rule 200(g)(2) of Regulation SHO provides that a short sale order must be marked ''short exempt'' if the seller is ''relying on an exception from the tick test of 17 CFR 240.10a–1, or any short sale price test of any exchange or national securities association.'' [109] Thus, if the Commission were to adopt the proposed amendments that would remove all price test restrictions, as well as prohibit any SRO from having a price test, the ''short exempt'' marking requirement would no longer be applicable.

2. Costs

Some market participants, including broker-dealers and SROs, may have to reprogram systems and update supervisory procedures due to the removal of the ''short exempt'' marking requirement. Sales of securities previously marked ''short exempt,'' however, would continue to be marked either ''long'' or ''short.'' Thus, we believe that such costs would be minor. We seek comment, however, on these and any additional costs that could be incurred, as well as specific data to support such costs.

VII. Consideration of Burden on Competition and Promotion of Efficiency, Competition, and Capital Formation

Section 3(f) of the Exchange Act requires the Commission, whenever it engages in rulemaking and whenever it is required to consider or determine if an action is necessary or appropriate in the public interest, to consider whether the action would promote efficiency, competition, and capital formation.[110] In addition, Section 23(a)(2) of the Exchange Act requires the Commission, when making rules under the Exchange Act, to consider the impact such rules would have on competition.[111] Exchange Act Section 23(a)(2) prohibits the Commission from adopting any rule that would impose a burden on competition not necessary or appropriate in furtherance of the purposes of the Exchange Act.

The proposed amendments would remove the price test restrictions of Rule 10a–1 [112] and provide that no price test, including any price test of any SRO, shall apply to short sales in any security. The proposed amendments would also prohibit any SRO from having a price test. In addition, the proposed amendments would remove the ''short exempt'' marking requirement of Rule 200(g) of Regulation SHO because this marking requirement applies only if the seller is relying on an exception from the tick test of Rule 10a–1 or any short sale price test of any exchange or national securities association.

Current short sale regulation is disparate. For example, Rule 10a–1 applies only to short sale transactions in listed securities. The NASD's and Nasdaq's bid tests apply only to Nasdaq Global Market securities. No price tests apply to short sales in Nasdaq Capital Market securities or securities quoted on the OTCBB or pink sheets. In addition, no price test applies to short sales of Nasdaq Global Market securities executed on exchanges trading Nasdaq securities on a UTP basis, unless the market on which the securities are being traded has adopted its own price test. Moreover, the current exceptions to, and exemptions from, the price tests for a wide range of short selling activities, have limited the applicability of the restrictions contained in these rules. The end result is inconsistent short sale regulation of securities, depending on the market where the securities are trading, and the type of short selling activity. Thus, the proposed amendments are intended to promote regulatory simplification and uniformity by no longer applying any price test restrictions on short selling.

We believe that the proposed amendments would not harm efficiency because the empirical evidence from the Pilot Results shows that the Pilot did not adversely impact price efficiency. Further, market participants would no longer have to apply different price tests to securities trading in different markets. We seek comment on whether the proposed amendments promote price efficiency, including whether the proposals might impact the potential for manipulative short selling.

In addition, we believe that the proposed amendments would not have an adverse impact on capital formation because the empirical evidence from the Pilot Results shows that the price tests have very little impact on overall market quality and, particularly in large securities, may be harmful to overall market quality. We solicit comment on whether the proposed amendments would promote capital formation, including to what extent the proposed removal of price test restrictions would affect investors' decisions to sell short certain equity securities.

We believe that the proposed amendments would promote competition among exchanges and other market centers because market participants would no longer be able to select a market on which to execute a short sale based on the applicability of price test restrictions. The proposed amendments would remove a purported competitive disadvantage experienced by some market centers because market participants would no longer route orders to avoid application of a market center's price test. Nor would market centers that do not have a price test be able to use that factor to attract order flow away from market centers that have a price test. Moreover, the proposed amendments would level the playing field for all market participants by requiring that no price test shall apply

[108] 17 CFR 242.200(g).

[109] *See id.* at 242.200(g)(2).

[110] 15 U.S.C. 78c(f).

[111] 15 U.S.C. 78w(a)(2).

[112] 17 CFR 242.10a–1.

to any short sale in any security in any market.

We solicit comment on whether the proposed amendments would promote competition, including whether market participants' decisions regarding on which market to execute a short sale would be affected by the removal of all price test restrictions.

We request comment on whether the proposed amendments would be expected to promote efficiency, competition, and capital formation.

VIII. Consideration of Impact on the Economy

For purposes of the Small Business Regulatory Enforcement Fairness Act of 1996, or ''SBREFA,'' [113] we must advise the Office of Management and Budget as to whether the proposed regulation constitutes a ''major'' rule. Under SBREFA, a rule is considered ''major'' where, if adopted, it results or is likely to result in:

- An annual effect on the economy of $100 million or more (either in the form of an increase or a decrease);
- A major increase in costs or prices for consumers or individual industries; or
- Significant adverse effect on competition, investment or innovation.

If a rule is ''major,'' its effectiveness will generally be delayed for 60 days pending Congressional review. We request comment on the potential impact of the proposed amendments on the economy on an annual basis. Commenters are requested to provide empirical data and other factual support for their view to the extent possible.

IX. Initial Regulatory Flexibility Analysis

The Commission has prepared an Initial Regulatory Flexibility Analysis (IRFA), in accordance with the provisions of the Regulatory Flexibility Act (RFA),[114] regarding the proposed amendments to Rule 10a–1 and Regulation SHO, Rules 200 and 201, under the Exchange Act.

A. Reasons for the Proposed Action

Based on the Pilot Results as well as our review of the status of short sale regulation in the context of the current application of Rule 10a–1 and other price tests, including the exceptions to the current rules and grants of relief from Rule 10a–1 by the Commission for a wide range of short selling activities, we are proposing to remove the tick test of Rule 10a–1 and to amend Regulation SHO to provide that no price test, as well as any price test by any SRO, shall apply to short selling in any security. In addition, the proposed amendments would prohibit any SRO from having a price test. These amendments are designed to modernize and simplify short sale regulation in light of current short selling systems and strategies used in the marketplace, while providing greater regulatory consistency to short selling. We are also proposing to remove the ''short exempt'' marking requirement of Regulation SHO because this requirement only applies if a seller is relying on an exception to a price test.

B. Objectives

The proposed amendments are designed to provide consistent regulation for short selling in all securities regardless of when or where such trades occur by removing all price test restrictions. In addition, the proposed amendments are intended to provide greater flexibility in effecting short sales because market participants would no longer be constrained by price test restrictions. Moreover, in light of the number of exemptions the Commission has granted under Rule 10a–1 for a wide range of short selling activities, the proposed amendments are designed to accommodate trading strategies and systems currently utilized in the marketplace that conflict with current price test restrictions. The proposed amendment to the ''short exempt'' marking requirement of Rule 200(g) of Regulation SHO [115] is necessary because this requirement only applies if a seller is relying on an exception to a price test.

C. Legal Basis

Pursuant to the Exchange Act and, particularly, Sections 2, 3(b), 6, 9(h), 10, 11A, 15, 15A, 17, 19, 23(a) thereof, 15 U.S.C. 78b, 78c, 78f, 78i, 78j, 78k–1, 78o, 78o–3, 78q, 78s, 78w(a), the Commission is proposing to remove Rule 10a–1, § 240.10a–1 and to amend Regulation SHO, §§ 242.200 and 242.201.

D. Small Entities Subject to the Rule

The entities covered by the proposed rule would include small broker-dealers, small businesses, and any investor who effects a short sale that qualifies as a small entity. Although it is impossible to quantify every type of small entity that may be able to effect a short sale in a security, Paragraph (c)(1) of Rule 0–10 under the Exchange Act [116] states that the term ''small business'' or ''small organization,'' when referring to a broker-dealer, means a broker or dealer that had total capital (net worth plus subordinated liabilities) of less than $500,000 on the date in the prior fiscal year as of which its audited financial statements were prepared pursuant to § 240.17a–5(d); and is not affiliated with any person (other than a natural person) that is not a small business or small organization. As of 2005, the Commission estimates that there were approximately 910 broker-dealers that qualified as small entities as defined above.[117]

Paragraph (e) of Rule 0–10 under the Exchange Act [118] states that the term ''small business'' or ''small organization,'' when referring to an exchange, means any exchange that: (1) Has been exempted from the reporting requirements of Rule 11Aa3–1 under the Exchange Act; and (2) is not affiliated with any person (other than a natural person) that is not a small business or small organization, as defined by Rule 0–10. No national securities exchanges are small entities because none meets these criteria. There is one national securities association (NASD) that would be subject to these proposed amendments. NASD is not a small entity as defined by 13 CFR 121.201.

Any business, however, regardless of industry, could be subject to the proposed amendments if it effects a short sale. The Commission believes that, except for the broker-dealers discussed above, an estimate of the number of small entities that fall under the proposed rule is not feasible.

E. Reporting, Recordkeeping, and other Compliance Requirements

The proposed amendments may impose some new or additional reporting, recordkeeping, or compliance costs on any affected party, including broker-dealers, that are small entities.

In order to comply with the Pilot when it became effective on May 2, 2005, small entities needed to modify their systems and surveillance mechanisms to exempt those securities included in the Pilot from current price test restrictions. Thus, the systems and surveillance mechanisms required to comply with the proposed amendments should already be in place. We believe that any necessary additional systems and surveillance changes would be small because, due to the Pilot, systems are currently programmed to exempt

[113] Pub. L. 104–121, Title II, 110 Stat. 857 (1996) (codified in various sections of 5 U.S.C., 15 U.S.C. and as a note to 5 U.S.C. 601).

[114] 5 U.S.C. 603.

[115] 17 CFR 242.200(g).

[116] 17 CFR 240.0–10(c)(1).

[117] These numbers are based on OEA's review of 2005 FOCUS Report filings reflecting registered broker-dealers. This number does not include broker-dealers that are delinquent on FOCUS Report filings.

[118] 17 CFR 240.0–10(e).

many securities from price test restrictions prior to the close of the consolidated tape and exempt all securities from price test restrictions between the close of the consolidated tape and the open of the consolidated tape on the following day.

We believe that any reprogramming costs or updating of surveillance mechanisms associated with the removal of the ''short exempt'' marking requirement should be minimal because sales of securities would continue to be required to be marked either ''long'' or ''short.'' The proposed amendments, if adopted, would merely remove an alternative marking requirement.

We solicit comment on what new recordkeeping, reporting or compliance requirements may arise as a result of these proposed amendments.

F. Duplicative, Overlapping or Conflicting Federal Rules

The Commission believes that there are no federal rules that duplicate, overlap or conflict with the proposed amendments.

G. Significant Alternatives

The RFA directs the Commission to consider significant alternatives that will accomplish the stated objective, while minimizing any significant adverse impact on small entities. Pursuant to Section 3(a) of the RFA,[119] the Commission must consider the following types of alternatives: (a) The establishment of differing compliance or reporting requirements or timetables that take into account the resources available to small entities; (b) the clarification, consolidation, or simplification of compliance and reporting requirements under the rule for small entities; (c) the use of performance rather than design standards; and (d) an exemption from coverage of the rule, or any part thereof, for small entities.

The proposed amendments are intended to modernize and simplify price test regulation by removing restrictions on the execution prices of short sales contained in current price tests, such as Rule 10a–1. As such, we believe that imposing different compliance requirements, and possibly a different timetable for implementing compliance requirements, for small entities would undermine the goal of this proposal. In addition, we have concluded similarly that it would be inconsistent with this goal of the proposed amendments to further clarify, consolidate or simplify the proposed amendments for small entities. Finally, the proposed amendments would impose performance standards rather than design standards.

H. Request for Comments

The Commission encourages the submission of written comments with respect to any aspect of the IRFA. In particular, the Commission seeks comment on (i) the number of small entities that will be affected by the proposed amendments; and (ii) the existence or nature of the potential impact of the proposed amendments on small entities. Those comments should specify costs of compliance with the proposed amendments, and suggest alternatives that would accomplish the objective of the proposed amendments.

X. Statutory Authority

Pursuant to the Exchange Act and, particularly, Sections 2, 3(b), 6, 9(h), 10, 11A, 15, 15A, 17, 17A, 23(a) thereof, 15 U.S.C. 78b, 78c, 78f, 78i, 78j, 78k–1, 78o, 78o–3, 78q, 78q–1, 78w(a), the Commission is proposing to remove Rule 10a–1, § 240.10a–1 and to amend Regulation SHO, §§ 242.200 and 201.

Text of the Proposed Amendments to Rule 10a–1 and Regulation SHO

List of Subjects in 17 CFR Parts 240 and 242

Brokers, Fraud, Reporting and recordkeeping requirements, Securities.

For the reasons set out in the preamble, Title 17, Chapter II, of the Code of Federal Regulations is proposed to be amended as follows.

PART 240—GENERAL RULES AND REGULATIONS, SECURITIES EXCHANGE ACT OF 1934

1. The general authority citation for part 240 is revised to read as follows:

Authority: 15 U.S.C. 77c, 77d, 77g, 77j, 77s, 77z–2, 77z–3, 77eee, 77ggg, 77nnn, 77sss, 77ttt, 78c, 78d, 78e, 78f, 78g, 78i, 78j, 78j–1, 78k, 78k–1, 78*l*, 78m, 78n, 78o, 78p, 78q, 78s, 78u–5, 78w, 78x, 78*ll*, 78mm, 80a–20, 80a–23, 80a–29, 80a–37, 80b–3, 80b–4, 80b–11, and 7201 *et. seq.*; and 18 U.S.C. 1350, unless otherwise noted.

* * * * *

§ 240.10a–1 [Removed and reserved]

2. Section 240.10a–1 is removed and reserved.

PART 242—REGULATIONS M, SHO, ATS, AC AND NMS, AND CUSTOMER MARGIN REQUIREMENTS FOR SECURITY FUTURES

3. The authority citation for part 242 continues to read as follows:

Authority: 15 U.S.C. 77g, 77q(a), 77s(a), 78b, 78c, 78g(c)(2), 78i(a), 78j, 78k–1(c), 78*l*, 78m, 78n, 78o(b), 78o(c), 78o(g), 78q(a), 78q(b), 78q(h), 78w(a), 78dd–1, 78mm, 80a–23, 80a–29, and 80a–37.

* * * * *

4. Section 242.200 is amended by revising the introductory text of paragraph (g) to read as follows and by removing and reserving paragraph (g)(2):

§ 242.200 Definition of ''short sale'' and marking requirements.

(g) A broker or dealer must mark all sell orders of any equity security as ''long'' or ''short.''

* * * * *

5. Section 242.201 is added to read as follows:

§ 242.201 Price test.

(a) No short sale price test, including any short sale price test of any self-regulatory organization, shall apply to short sales in any security.

(b) No self-regulatory organization shall have any rule that is not in conformity with, or conflicts with, paragraph (a) of this section.

Dated: December 7, 2006.

By the Commission.

Nancy M. Morris,

Secretary.

[FR Doc. E6–21156 Filed 12–12–06; 8:45 am]

BILLING CODE 8011–01–P

[119] 5 U.S.C. 603(c).

Reader Aids

Federal Register

Vol. 71, No. 239

Wednesday, December 13, 2006

CUSTOMER SERVICE AND INFORMATION

Federal Register/Code of Federal Regulations	
General Information, indexes and other finding aids	**202–741–6000**
Laws	**741–6000**
Presidential Documents	
Executive orders and proclamations	**741–6000**
The United States Government Manual	**741–6000**
Other Services	
Electronic and on-line services (voice)	**741–6020**
Privacy Act Compilation	**741–6064**
Public Laws Update Service (numbers, dates, etc.)	**741–6043**
TTY for the deaf-and-hard-of-hearing	**741–6086**

ELECTRONIC RESEARCH

World Wide Web

Full text of the daily Federal Register, CFR and other publications is located at: **http://www.gpoaccess.gov/nara/index.html**

Federal Register information and research tools, including Public Inspection List, indexes, and links to GPO Access are located at: **http://www.archives. gov/federal__register**

E-mail

FEDREGTOC-L (Federal Register Table of Contents LISTSERV) is an open e-mail service that provides subscribers with a digital form of the Federal Register Table of Contents. The digital form of the Federal Register Table of Contents includes HTML and PDF links to the full text of each document.

To join or leave, go to **http://listserv.access.gpo.gov** and select *Online mailing list archives, FEDREGTOC-L, Join or leave the list (or change settings);* then follow the instructions.

PENS (Public Law Electronic Notification Service) is an e-mail service that notifies subscribers of recently enacted laws.

To subscribe, go to **http://listserv.gsa.gov/archives/publaws-l.html** and select *Join or leave the list (or change settings);* then follow the instructions.

FEDREGTOC-L and **PENS** are mailing lists only. We cannot respond to specific inquiries.

Reference questions. Send questions and comments about the Federal Register system to: **fedreg.info@nara.gov**

The Federal Register staff cannot interpret specific documents or regulations.

FEDERAL REGISTER PAGES AND DATE, DECEMBER

69429–70274 1
70275–70456 4
70457–70642 5
70643–70850 6
70851–71036 7
71037–71462 8
71462–74450 11
74451–74754 12
74755–75082 13

CFR PARTS AFFECTED DURING DECEMBER

At the end of each month, the Office of the Federal Register publishes separately a List of CFR Sections Affected (LSA), which lists parts and sections affected by documents published since the revision date of each title.

2 CFR

901 70457

3 CFR

Proclamations:
8087 70455
8088 70851
8089 70853
Executive Orders:
12866 (See EO 13416) 71033
13415 70641
13416 71033
13417 71459
Administrative Orders:
Presidential Determinations:
No. 2007–4 of November 22, 2006 74451
No. 2007–5 of November 27, 2006 74453

5 CFR

Proposed Rules:
3201 70325

7 CFR

33 70643
249 74618
457 74455
981 70646
1220 69429
1792 70275
Proposed Rules:
51 69497
272 71075
273 71075
319 70330
981 70683

8 CFR

1003 70855

9 CFR

Proposed Rules:
78 74826
93 74827

10 CFR

70 69430
72 71463
430 71340
431 71340
433 70275
434 70275
435 70275
600 70457
606 70457
Proposed Rules:
20 74847
54 74848

11 CFR

Proposed Rules:
104 71084
111 .....71088, 71090, 71093

12 CFR

205 69430
215 71472
Proposed Rules:
Ch. III 74857
205 69500

14 CFR

13 70460
23 74456
25 .....70646, 74755, 74758
39 .....70284, 70286, 70294, 70297, 70300, 70648, 70857, 70860, 70862, 70865, 70868, 71475, 71478, 71480, 74459,74462,74464,74466
71 .....69438, 70302, 70465, 70650, 74761
73 70466
97 .....69438, 74762, 74764
Proposed Rules:
39 .....70908, 71096, 71099, 71101, 71103, 71492, 71494, 71497, 71499, 74873, 74878
71 .....70909, 70911
145 70254
399 71106

16 CFR

Proposed Rules:
Ch. II 74472

17 CFR

200 71037
232 74698
239 74698
240 74698
249 74698
249b 74698
269 74698
274 74698
Proposed Rules:
240 .....71109, 75068
242 .....75002, 75068

18 CFR

50 69440
380 69440
Proposed Rules:
2 70692
33 70692
40 70695
365 70692
366 70692

19 CFR

12 69447

Proposed Rules:

210 71113

21 CFR

2 70870
25 74766
80 70873
101 74785
500 74766
514 74766
520 ....70302, 71038
558 ....70304, 74466, 74766
1301 69478

Proposed Rules:

2 70912
201 74474
1312 69504

22 CFR

Proposed Rules:

22 74880
51 74880

25 CFR

Proposed Rules:

292 70335
502 71115
546 71115
547 71115

26 CFR

1 ....70875, 70877, 71039, 71040, 71045, 74467
54 75014
301 71040
602 ....71039, 71040, 71045

Proposed Rules:

1 ....71116, 71241, 74482
301 70335

27 CFR

Proposed Rules:

9 70472
40 70476
41 70476
44 70476
45 70476

28 CFR

61 71047

Proposed Rules:

570 70696

29 CFR

54 75055
2590 75014
4022 69480
4044 69481

Proposed Rules:

102 74881
825 69504

30 CFR

3 71430
48 71430
50 71430
75 71430

31 CFR

1 69482

Proposed Rules:

538 71500
560 71500

32 CFR

626 71051
627 71051
656 71051

33 CFR

117 ....70305, 70467, 70468, 70877
165 ....69484, 71483

Proposed Rules:

165 ....69514, 69517
401 70336

34 CFR

Proposed Rules:

674 71117
682 71117
685 71117

37 CFR

253 69486

40 CFR

51 74792
52 ....69486, 70312, 70315, 70468, 70880, 70883, 71486, 71489
63 70651
70 ....70468, 70665
81 71489
96 74792
97 74792
122 69622
180 ....70667, 70670, 71052, 74795, 74802
239 71241
258 71241
300 70318
799 71058

Proposed Rules:

52 ....69519, 70338, 70339, 70476, 70699, 70914, 70915
69 74886
70 ....70476, 70702
81 70915
180 70703

42 CFR

405 ....69624, 71062
410 ....69624, 71062
411 ....69624, 71062
414 ....69624, 71062
415 ....69624, 71062
424 ....69624, 71062
460 71244
462 71244
466 71244
473 71244
476 71244
482 71378

Proposed Rules:

1001 71501

44 CFR

65 70885
67 ....70894, 70904

Proposed Rules:

67 70930

45 CFR

146 75014

47 CFR

2 70671
27 70906
64 ....74469, 74819
87 70671
97 74823

Proposed Rules:

Ch. I 70709
2 70710
87 70710

48 CFR

Ch. I 74656, 74680
2 74667
10 74667
12 74667
16 ....74656, 74667
32 74656
52 ....74656, 74667
201 69488
208 69489
212 ....69489, 71072
215 69492
216 74469
222 71072
230 69492
232 69489
252 ....69489, 69492, 71072, 74469
253 69492
1802 71072
1805 71072
1819 71072
1825 71072
1827 71072
1828 71072
1852 71072

Proposed Rules:

23 70937
36 70937
52 70937
719 70939

49 CFR

571 74823

Proposed Rules:

171 69527
172 69527
173 69527
174 69527
178 69527
213 70590
214 70590
215 70590
217 70590
218 70590
219 70590
220 70590
221 70590
222 70590
223 70590
224 70590
225 70590
228 70590
229 70590
230 70590
231 70590
232 70590
233 70590
234 70590
235 70590
236 70590
238 70590
239 70590
240 70590
241 70590
571 70477

50 CFR

17 74592
229 ....70319, 70321
622 70680
648 ....70682, 70906, 71073, 74471
665 69495
679 70323

Proposed Rules:

17 ....70479, 70483, 70715, 70717
22 74483
92 75060
229 70339
622 70492
648 70493
660 ....70939, 70941
665 69527
679 70943

REMINDERS

The items in this list were editorially compiled as an aid to Federal Register users. Inclusion or exclusion from this list has no legal significance.

RULES GOING INTO EFFECT DECEMBER 13, 2006

AGRICULTURE DEPARTMENT

Agricultural Marketing Service

Apricots grown in Washington; published 11-13-06

Cherries (tart) grown in Michigan, et al.; published 11-13-06

COMMERCE DEPARTMENT

National Oceanic and Atmospheric Administration

Fishery conservation and management:

West Coast States and Western Pacific fisheries—

Pacific Coast groundfish; published 11-13-06

ENVIRONMENTAL PROTECTION AGENCY

Air quality implementation plans:

Preparation, adoption, and submittal—

Clean Air Interstate Rule; Federal implementation plans; correction; published 12-13-06

Pesticides; tolerances in food, animal feeds, and raw agricultural commodities:

Clothianidin; published 12-13-06

HEALTH AND HUMAN SERVICES DEPARTMENT

Food and Drug Administration

Food for human consumption:

Food labeling—

Dietary supplements; nutrition labeling on 'per day' basis; published 12-13-06

HOMELAND SECURITY DEPARTMENT

Coast Guard

Drawbridge operations:

Louisiana; published 12-5-06

TRANSPORTATION DEPARTMENT

Federal Aviation Administration

Airworthiness directives:

Pilatus Aircraft Ltd.; published 11-8-06

Raytheon; published 11-8-06

Class D airspace

Correction; published 12-13-06

Standard instrument approach procedures; published 12-13-06

TRANSPORTATION DEPARTMENT

Saint Lawrence Seaway Development Corporation

Seaway regulations and rules:

Civil monetary penalty; inflation adjustment; published 11-13-06

COMMENTS DUE NEXT WEEK

COMMERCE DEPARTMENT

National Oceanic and Atmospheric Administration

Fishery conservation and management:

Alaska; fisheries of Exclusive Economic Zone—

Pacific halibut and sablefish; comments due by 12-18-06; published 11-1-06 [FR 06-09009]

ENERGY DEPARTMENT

Federal Energy Regulatory Commission

Natural gas companies (Federal Power Act):

Business practice standards and communication protocols for public utilities; comments due by 12-18-06; published 11-3-06 [FR E6-18336]

ENVIRONMENTAL PROTECTION AGENCY

Air pollution; standards of performance for new stationary sources:

Industrial-commercial-institutional steam generating units; comments due by 12-18-06; published 11-16-06 [FR E6-19386]

Air quality implementation plans; approval and promulgation; various States:

Louisiana; comments due by 12-21-06; published 11-21-06 [FR E6-19642]

Pesticides; tolerances in food, animal feeds, and raw agricultural commodities:

Flumioxazin; comments due by 12-18-06; published 10-18-06 [FR E6-17138]

Novaluron; comments due by 12-19-06; published 10-20-06 [FR E6-17566]

Solid wastes:

State municipal solid waste landfill permit programs—

Missouri; comments due by 12-18-06; published 11-16-06 [FR E6-19383]

Missouri; comments due by 12-18-06; published 11-16-06 [FR E6-19384]

Nebraska; comments due by 12-18-06; published 11-16-06 [FR E6-19387]

Nebraska; comments due by 12-18-06; published 11-16-06 [FR E6-19388]

Toxic substances:

Hazardous substances priority list; chemical testing requirements; comments due by 12-19-06; published 10-20-06 [FR E6-17569]

FEDERAL TRADE COMMISSION

Telemarketing sales rules:

Prerecorded telemarketing calls, etc.; seller and telemarketer compliance; comments due by 12-18-06; published 11-9-06 [FR E6-19012]

HEALTH AND HUMAN SERVICES DEPARTMENT

Centers for Medicare & Medicaid Services

Medicare:

Part D prescription drugs; data collection; comments due by 12-18-06; published 10-18-06 [FR 06-08750]

HEALTH AND HUMAN SERVICES DEPARTMENT

Food and Drug Administration

Animal drugs, feeds, and related products:

Minor Use and Minor Species Act of 2004; implementation—

Legally marketed unapproved drugs for minor species; index; comments due by 12-20-06; published 8-22-06 [FR 06-07070]

Legally marketed unapproved drugs for minor species; index; comments due by 12-20-06; published 10-2-06 [FR E6-16208]

HOMELAND SECURITY DEPARTMENT

Customs and Border Protection Bureau

Merchandise, special classes:

Canada; softwood lumber products; special entry requirements; comments due by 12-18-06; published 10-18-06 [FR 06-08761]

HOMELAND SECURITY DEPARTMENT

Coast Guard

Anchorage regulations:

New York; comments due by 12-18-06; published 11-16-06 [FR E6-19314]

Drawbridge operations:

Iowa and Illinois; comments due by 12-18-06; published 11-16-06 [FR E6-19311]

Ports and waterways safety; regulated navigation areas, safety zones, security zones, etc.:

San Carlos Bay, FL; comments due by 12-21-06; published 11-21-06 [FR E6-19680]

HOUSING AND URBAN DEVELOPMENT DEPARTMENT

Public and Indian housing:

Indian Housing Block Grant Program; minimum funding extension; comments due by 12-18-06; published 10-19-06 [FR E6-17518]

INTERIOR DEPARTMENT

Indian Affairs Bureau

Economic enterprises:

Gaming on trust lands acquired after October 1988; determination procedures

Correction; comments due by 12-19-06; published 12-4-06 [FR E6-20494]

INTERIOR DEPARTMENT

Fish and Wildlife Service

Endangered and threatened species:

Critical habitat designations—

Suisun thistle and soft bird's-beak; comments due by 12-20-06; published 4-11-06 [FR 06-03343]

Suisun thistle and soft bird's-beak; comments due by 12-20-06; published 11-20-06 [FR E6-19572]

Yadon's piperia; comments due by 12-18-06; published 10-18-06 [FR 06-08600]

JUSTICE DEPARTMENT

Drug Enforcement Administration

Controlled substances; importation and exportation:

Reexportation; comments due by 12-18-06;

published 10-18-06 [FR E6-17275]

LABOR DEPARTMENT

Employment and Training Administration

Trade Adjustment Assistance Program:

Alternative trade adjustment assistance for older workers; comments due by 12-18-06; published 10-18-06 [FR 06-08752]

LEGAL SERVICES CORPORATION

Client grievance procedures; comments due by 12-22-06; published 8-21-06 [FR E6-13700]

LIBRARY OF CONGRESS

Copyright Office, Library of Congress

Copyright office and procedures:

Retransmission of digital broadcast signals pursuant to the cable statutory license; comments due by 12-18-06; published 11-22-06 [FR E6-19794]

NATIONAL TRANSPORTATION SAFETY BOARD

Practice and procedure:

Public availability of information; comments due by 12-22-06; published 11-22-06 [FR 06-09289]

NUCLEAR REGULATORY COMMISSION

Production and utilization facilities; domestic licensing:

Fuel within dry storage casks or transportation packages in spent fuel pool; criticality control; comments due by 12-18-06; published 11-16-06 [FR E6-19372]

PEACE CORPS

Governmentwide debarment and suspension (nonprocurement); Federal agency guidance; comments due by 12-22-06; published 11-22-06 [FR 06-09369]

SECURITIES AND EXCHANGE COMMISSION

Securities:

Covered securities; designation of certain securities listed on NASDAQ Stock Market LLC; comments due by 12-22-06; published 11-22-06 [FR E6-19740]

STATE DEPARTMENT

Passports:

Card format passport; fee schedule changes; comments due by 12-18-06; published 10-17-06 [FR E6-17237]

TRANSPORTATION DEPARTMENT

Federal Aviation Administration

Airworthiness directives:

Airbus; comments due by 12-18-06; published 10-19-06 [FR E6-17426]

Boeing; comments due by 12-18-06; published 10-19-06 [FR E6-17428]

Bombardier; comments due by 12-20-06; published 11-20-06 [FR E6-19539]

EADS SOCATA; comments due by 12-18-06; published 11-17-06 [FR E6-19443]

Empresa Brasileira de Aeronautica S.A. (EMBRAER); comments due by 12-20-06; published 11-20-06 [FR E6-19532]

EXTRA Flugzeugproducktions-und Vertriebs GmbH; comments due by 12-22-06; published 11-22-06 [FR E6-19762]

Fokker; comments due by 12-20-06; published 11-20-06 [FR E6-19538]

MD Helicopters, Inc.; comments due by 12-18-06; published 10-17-06 [FR E6-17186]

Raytheon; comments due by 12-18-06; published 10-17-06 [FR E6-17188]

SOCATA - Groupe AEROSPATIALE; comments due by 12-22-06; published 11-22-06 [FR E6-19801]

Turbomeca; comments due by 12-18-06; published 10-19-06 [FR E6-17328]

Airworthiness standards:

Special conditions—

General Electric Co. GEnx turbofan engine models; Open for comments until further notice; published 11-17-06 [FR 06-09230]

General Electric Co. GEnx turbofan engine models; Open for comments until further notice; published 11-17-06 [FR 06-09230]

Class D airspace; comments due by 12-18-06; published 11-17-06 [FR 06-09248]

Class E airspace; comments due by 12-18-06; published 11-17-06 [FR 06-09246]

TRANSPORTATION DEPARTMENT

Pipeline and Hazardous Materials Safety Administration

Hazardous materials:

Security plan requirements; public meeting; comments due by 12-20-06; published 9-21-06 [FR 06-07930]

TREASURY DEPARTMENT

Internal Revenue Service

Income taxes:

Elimination of country-by-country reporting to shareholders of foreign taxes paid by regulated investment companies; comments due by 12-18-06; published 9-18-06 [FR 06-07731]

LIST OF PUBLIC LAWS

This is a continuing list of public bills from the current session of Congress which have become Federal laws. It may be used in conjunction with "P L U S" (Public Laws Update Service) on 202–741–6043. This list is also available online at *http://www.archives.gov/federal-register/laws.html*.

The text of laws is not published in the **Federal Register** but may be ordered in "slip law" (individual pamphlet) form from the Superintendent of Documents, U.S. Government Printing Office, Washington, DC 20402 (phone, 202–512–1808). The text will also be made available on the Internet from GPO Access at *http://www.gpoaccess.gov/plaws/index.html*. Some laws may not yet be available.

H.J. Res. 102/P.L. 109–383

Making further continuing appropriations for the fiscal year 2007, and for other purposes. (Dec. 9, 2006; 120 Stat. 2678)

Last List December 5, 2006

Public Laws Electronic Notification Service (PENS)

PENS is a free electronic mail notification service of newly enacted public laws. To subscribe, go to *http://listserv.gsa.gov/archives/publaws-l.html*

Note: This service is strictly for E-mail notification of new laws. The text of laws is not available through this service. **PENS** cannot respond to specific inquiries sent to this address.