AUTHENTICATED
U.S. GOVERNMENT
INFORMATION
GPO

Federal Register

7–20–06 Thursday
Vol. 71 No. 139 July 20, 2006

Pages 41091–41344

The **FEDERAL REGISTER** (ISSN 0097–6326) is published daily, Monday through Friday, except official holidays, by the Office of the Federal Register, National Archives and Records Administration, Washington, DC 20408, under the Federal Register Act (44 U.S.C. Ch. 15) and the regulations of the Administrative Committee of the Federal Register (1 CFR Ch. I). The Superintendent of Documents, U.S. Government Printing Office, Washington, DC 20402 is the exclusive distributor of the official edition. Periodicals postage is paid at Washington, DC.

The **FEDERAL REGISTER** provides a uniform system for making available to the public regulations and legal notices issued by Federal agencies. These include Presidential proclamations and Executive Orders, Federal agency documents having general applicability and legal effect, documents required to be published by act of Congress, and other Federal agency documents of public interest.

Documents are on file for public inspection in the Office of the Federal Register the day before they are published, unless the issuing agency requests earlier filing. For a list of documents currently on file for public inspection, see *www.archives.gov.*

The seal of the National Archives and Records Administration authenticates the Federal Register as the official serial publication established under the Federal Register Act. Under 44 U.S.C. 1507, the contents of the **Federal Register** shall be judicially noticed.

The **Federal Register** is published in paper and on 24x microfiche. It is also available online at no charge as one of the databases on GPO Access, a service of the U.S. Government Printing Office.

The online edition of the **Federal Register** *www.gpoaccess.gov/nara,* available through GPO Access, is issued under the authority of the Administrative Committee of the Federal Register as the official legal equivalent of the paper and microfiche editions (44 U.S.C. 4101 and 1 CFR 5.10). It is updated by 6 a.m. each day the **Federal Register** is published and includes both text and graphics from Volume 59, Number 1 (January 2, 1994) forward.

For more information about GPO Access, contact the GPO Access User Support Team, call toll free 1-888-293-6498; DC area 202-512-1530; fax at 202-512-1262; or via e-mail at *gpoaccess@gpo.gov.* The Support Team is available between 7:00 a.m. and 9:00 p.m. Eastern Time, Monday–Friday, except official holidays.

The annual subscription price for the **Federal Register** paper edition is $749 plus postage, or $808, plus postage, for a combined **Federal Register, Federal Register** Index and List of CFR Sections Affected (LSA) subscription; the microfiche edition of the **Federal Register** including the **Federal Register** Index and LSA is $165, plus postage. Six month subscriptions are available for one-half the annual rate. The prevailing postal rates will be applied to orders according to the delivery method requested. The price of a single copy of the daily **Federal Register,** including postage, is based on the number of pages: $11 for an issue containing less than 200 pages; $22 for an issue containing 200 to 400 pages; and $33 for an issue containing more than 400 pages. Single issues of the microfiche edition may be purchased for $3 per copy, including postage. Remit check or money order, made payable to the Superintendent of Documents, or charge to your GPO Deposit Account, VISA, MasterCard, American Express, or Discover. Mail to: New Orders, Superintendent of Documents, P.O. Box 371954, Pittsburgh, PA 15250-7954; or call toll free 1-866-512-1800, DC area 202-512-1800; or go to the U.S. Government Online Bookstore site, see *bookstore.gpo.gov.*

There are no restrictions on the republication of material appearing in the **Federal Register.**

How To Cite This Publication: Use the volume number and the page number. Example: 71 FR 12345.

Postmaster: Send address changes to the Superintendent of Documents, Federal Register, U.S. Government Printing Office, Washington DC 20402, along with the entire mailing label from the last issue received.

SUBSCRIPTIONS AND COPIES

PUBLIC

Subscriptions:

Paper or fiche	**202–512–1800**
Assistance with public subscriptions	**202–512–1806**

General online information **202–512–1530; 1–888–293–6498**

Single copies/back copies:

Paper or fiche	**202–512–1800**
Assistance with public single copies	**1–866–512–1800 (Toll-Free)**

FEDERAL AGENCIES

Subscriptions:

Paper or fiche	**202–741–6005**
Assistance with Federal agency subscriptions	**202–741–6005**

FEDERAL REGISTER WORKSHOP

THE FEDERAL REGISTER: WHAT IT IS AND HOW TO USE IT

FOR: Any person who uses the Federal Register and Code of Federal Regulations.

WHO: Sponsored by the Office of the Federal Register.

WHAT: Free public briefings (approximately 3 hours) to present:

1. The regulatory process, with a focus on the Federal Register system and the public's role in the development of regulations.

2. The relationship between the Federal Register and Code of Federal Regulations.

3. The important elements of typical Federal Register documents.

4. An introduction to the finding aids of the FR/CFR system.

WHY: To provide the public with access to information necessary to research Federal agency regulations which directly affect them. There will be no discussion of specific agency regulations.

WHEN: Tuesday, August 8, 2006
9:00 a.m.–Noon

WHERE: Office of the Federal Register
Conference Room, Suite 700
800 North Capitol Street, NW.
Washington, DC 20002

RESERVATIONS: (202) 741–6008

Printed on recycled paper.

Contents

Federal Register

Vol. 71, No. 139

Thursday, July 20, 2006

Agriculture Department
See Cooperative State Research, Education, and Extension Service
See Grain Inspection, Packers and Stockyards Administration

Antitrust Division
NOTICES
Competitive impact statements and proposed consent judgments:
Inco Ltd. and Falconbridge Ltd., 41237–41249
McClatchy Co., and Knight-Ridder, Inc., 41249–41257
National cooperative research notifications:
DVD Copy Control Association, 41257
Network Centric Operations Industry Consortium, Inc., 41257–41258
Semiconductor Test Consortium, Inc., 41258

Army Department
NOTICES
Inventions, Government-owned; availability for licensing, 41209–41210

Arts and Humanities, National Foundation
See National Foundation on the Arts and the Humanities

Centers for Disease Control and Prevention
NOTICES
Agency information collection activities; proposals, submissions, and approvals, 41219–41220

Coast Guard
NOTICES
Meetings:
Chemical Transportation Advisory Committee, 41226–41227

Commerce Department
See International Trade Administration
See National Oceanic and Atmospheric Administration

Committee for the Implementation of Textile Agreements
NOTICES
Textile and apparel categories:
Commercial availability actions—
Encajes S.A. Colombia; polyester and nylon yarns; articles containing lace fabrics, 41208–41209

Cooperative State Research, Education, and Extension Service

NOTICES
Agency information collection activities; proposals, submissions, and approvals, 41197

Defense Department
See Army Department

Education Department
NOTICES
Grants and cooperative agreements; availability, etc.:
Elementary and secondary education—
Emergency Impact Aid for Displaced Students Program, 41210

Energy Department
See Energy Efficiency and Renewable Energy Office

Energy Efficiency and Renewable Energy Office
PROPOSED RULES
Consumer products; energy conservation program:
Residential central air conditioners and heat pumps; test procedure, 41320–41344

Environmental Protection Agency
RULES
Air programs:
Stratospheric ozone protection—
Hydrochloroflurocarbons (HCFCs) production, import, and export; allowance system, 41163–41172
Air quality implementation plans; approval and promulgation; various States:
New York, 41162–41163
PROPOSED RULES
Air programs:
Stratospheric ozone protection—
Hydrochloroflurocarbons (HCFCs) production, import, and export; allowance system, 41192–41196
NOTICES
Agency information collection activities; proposals, submissions, and approvals, 41210–41216
Water pollution control:
Marine sanitation device standard; petitions, determinations, etc.—
Massachusetts, 41216–41217
Total maximum daily loads—
Louisiana, 41217–41218

Executive Office of the President
See Presidential Documents

Federal Aviation Administration
RULES
Airworthiness directives:
Airbus, 41109–41113, 41118–41121
Boeing, 41113–41116
Honeywell International Inc., 41121–41125
Mitsubishi Heavy Industries, 41116–41118
Airworthiness standards:
Special conditions—
Avidyne Corp., Inc.; various airplane models, 41104–41108
Cirrus Design Corp. Model SR22 airplanes, 41099–41101
Societe de Motorisation Aeronautiques Engines, Inc., Cessna Models 182Q and 182R airplanes, 41101–41104
PROPOSED RULES
Airworthiness standards:
Engine bird ingestion, 41184–41192

NOTICES
Aeronautical land-use assurance; waivers:
Cambridge Municipal Airport, OH, 41307
Passenger facility charges; applications, etc.:
City of Atlanta, GA, et al., 41307–41310
Reports and guidance documents; availability, etc.:
National Environmental Policy Act implementing instructions for airport actions, 41310

Federal Communications Commission
NOTICES
Meetings; Sunshine Act, 41218–41219

Federal Emergency Management Agency
RULES
Flood insurance; communities eligible for sale:
Various States, 41172–41177
NOTICES
Disaster and emergency areas:
Delaware, 41227–41228
Louisiana, 41228
Maryland, 41228
Mississippi, 41228–41229
New Jersey, 41229
New York, 41229–41231
Ohio, 41231
Pennsylvania, 41231–41233

Federal Highway Administration
NOTICES
Environmental statements; notice of intent:
Hamilton County, OH and Kenton County, KY, 41310
National Outdoor Advertising Control Program Assessment; comment request, 41258–41260

Federal Motor Carrier Safety Administration
NOTICES
Motor carrier safety standards:
Driver qualifications; vision requirement exemptions, 41310–41313

Federal Railroad Administration
NOTICES
Exemption petitions, etc.:
Amtrak, 41313

Federal Reserve System
NOTICES
Banks and bank holding companies:
Change in bank control, 41219
Permissible nonbanking activities, 41219

Food and Drug Administration
RULES
Color additives:
Mica-based pearlescent pigments, 41125–41127
NOTICES
Meetings:
Psychopharmacologic Drugs Advisory Committee, 41220
Reproductive Health Drugs Advisory Committee, 41220–41221
Reports and guidance documents; availability, etc.:
Manufactured Food Regulatory Program Standards, 41221–41223

Grain Inspection, Packers and Stockyards Administration
NOTICES
Agency designation actions:
Texas, 41198

Health and Human Services Department
See Centers for Disease Control and Prevention
See Food and Drug Administration
See Health Resources and Services Administration
See National Institutes of Health
See Substance Abuse and Mental Health Services Administration

Health Resources and Services Administration
NOTICES
Meetings:
Interdisciplinary, Community-Based Linkages Advisory Committee, 41223

Homeland Security Department
See Coast Guard
See Federal Emergency Management Agency

Interior Department
See Land Management Bureau
See National Park Service
See Reclamation Bureau

Internal Revenue Service
NOTICES
Meetings:
Taxpayer Advocacy Panels, 41316

International Trade Administration
NOTICES
Antidumping:
Frozen warmwater shrimp from—
Brazil, 41199–41200
Ecuador, 41198–41199
Thailand, 41200–41201
Polyester staple fiber from—
China, 41201–41205
Stainless steel butt-weld pipe fittings from-
Malaysia, 41205–41206

Justice Department
See Antitrust Division

Labor Department
See Occupational Safety and Health Administration

Land Management Bureau
NOTICES
Coal leases, exploration licenses, etc.:
Montana, 41233–41234
Environmental statements; record of decision:
Jack Morrow Hills Coordinated Activity Plan and Green River Resource Management Plan, WY, 41234

Morris K. Udall Scholarship and Excellence in National Environmental Policy Foundation
NOTICES
National Outdoor Advertising Control Program Assessment; comment request, 41258–41260

National Aeronautics and Space Administration
NOTICES
Environmental statements; availability, etc.:
Crew exploration vehicle development, 41260–41261

National Foundation on the Arts and the Humanities
NOTICES
Agency information collection activities; proposals, submissions, and approvals, 41261–41263

National Institutes of Health
NOTICES
Agency information collection activities; proposals, submissions, and approvals, 41223–41225
Meetings:
National Institute of Allergy and Infectious Diseases, 41225
National Institute of Neurological Disorders and Stroke, 41225–41226

National Oceanic and Atmospheric Administration
RULES
Fishery conservation and management:
Alaska; fisheries of Exclusive Economic Zone—Bering Sea and Aleutian Islands squid, 41178
Caribbean, Gulf, and South Atlantic fisheries—Tilefish, 41177–41178
NOTICES
Endangered and threatened species:
Recovery plans—
Steller sea lion, 41206–41207
Environmental statements; notice of intent:
South Atlantic deepwater snapper grouper species; marine protected areas; establishment, 41207
Marine mammals:
Taking and importing—
El Salvador; yellowfin tuna harvested in Eastern Tropical Pacific Ocean; affirmative finding renewed, 41207–41208

National Park Service
NOTICES
Environmental statements; availability, etc.:
Minidoka Internment National Monument, ID; general management plan, 41234–41236

Nuclear Regulatory Commission
NOTICES
Agency information collection activities; proposals, submissions, and approvals, 41263
Meetings:
Nuclear Waste Advisory Committee, 41263–41264
Reports and guidance documents; availability, etc.:
Combustion engineering plant; risk-inform requirements regarding exigent plant shutdown; consolidated line item process; technical specification improvement, 41264–41280

Occupational Safety and Health Administration
RULES
Construction and occupational safety and health standards:
Roll-over protective structures; corrections and technical amendments, 41127–41161

Personnel Management Office
RULES
Notification and Federal Employees Antidiscrimination and Retaliation Act of 2002; implementation and training, 41095–41099

Presidential Documents
PROCLAMATIONS
Special observances:
Captive Nations Week (Proc. 8036), 41091–41092
ADMINISTRATIVE ORDERS
Liberia; continuation of national emergency blocking property of certain persons and prohibiting the importation of certain goods (Notice of July 18, 2006), 41093–41094

Reclamation Bureau
NOTICES
Environmental statements; notice of intent:
Milltown Hill Project, OR, 41236–41237

Securities and Exchange Commission
NOTICES
Agency information collection activities; proposals, submissions, and approvals, 41280–41283
Self-regulatory organizations; proposed rule changes:
American Stock Exchange LLC, 41283–41287
Chicago Board Options Exchange, Inc., 41287–41289
Municipal Securities Rulemaking Board, 41289–41291
NASDAQ Stock Market LLC, 41291–41305
NYSE Arca, Inc., 41305–41306

State Department
RULES
Acquisition regulations:
Miscellaneous amendments
Correction, 41177
NOTICES
Organization, functions, and authority delegations:
Under Secretary for Political Affairs, 41306–41307

Substance Abuse and Mental Health Services Administration
NOTICES
Meetings:
Substance Abuse Treatment Center National Advisory Council, 41226
Women's Services Advisory Committee, 41226

Surface Transportation Board
NOTICES
Railroad operation, acquisition, construction, etc.:
BNSF Railway Co., 41313–41314
Kansas City Southern Railway Co., 41314

Textile Agreements Implementation Committee
See Committee for the Implementation of Textile Agreements

Thrift Supervision Office
PROPOSED RULES
Mutual-to-stock conversions and mutual holding company structures; stock benefit plans, 41179–41184

Transportation Department
See Federal Aviation Administration
See Federal Highway Administration
See Federal Motor Carrier Safety Administration
See Federal Railroad Administration
See Surface Transportation Board

Treasury Department
See Internal Revenue Service
See Thrift Supervision Office
NOTICES
Agency information collection activities; proposals, submissions, and approvals, 41314–41316

U.S.-China Economic and Security Review Commission
NOTICES
Hearings, 41316–41317

Separate Parts In This Issue

Part II

Energy Department, Energy Efficiency and Renewable Energy Office, 41320–41344

Reader Aids

Consult the Reader Aids section at the end of this issue for phone numbers, online resources, finding aids, reminders, and notice of recently enacted public laws.

To subscribe to the Federal Register Table of Contents LISTSERV electronic mailing list, go to http://listserv.access.gpo.gov and select Online mailing list archives, FEDREGTOC-L, Join or leave the list (or change settings); then follow the instructions.

CFR PARTS AFFECTED IN THIS ISSUE

A cumulative list of the parts affected this month can be found in the Reader Aids section at the end of this issue.

3 CFR

Proclamations:

8036 41091

Executive Orders:

13348 (See Notice of July 18, 2006) 41093

Administrative Orders:

Notices

Notice of July 18, 2006 41093

5 CFR

724 41095

10 CFR

Proposed Rules:

430 41320

12 CFR

Proposed Rules:

563b 41179

575 41179

14 CFR

23 (3 documents) 41099, 41101, 41104

39 (5 documents) 41109, 41113, 41116, 41118, 41121

Proposed Rules:

33 41184

21 CFR

73 41125

29 CFR

1926 41127

1928 41127

40 CFR

52 41162

82 41163

Proposed Rules:

82 41192

44 CFR

64 41172

48 CFR

652 41177

50 CFR

622 41177

679 41178

Federal Register
Vol. 71, No. 139
Thursday, July 20, 2006

Presidential Documents

Title 3—

The President

Proclamation 8036 of July 13, 2006

Captive Nations Week, 2006

By the President of the United States of America

A Proclamation

The best hope for peace is the expansion of freedom throughout the world. During Captive Nations Week, we reaffirm our commitment to advancing liberty, protecting human rights, and helping people realize the great promise of democracy.

In proclaiming the first Captive Nations Week in 1959, President Dwight Eisenhower said that ''the citizens of the United States are linked by bonds of family and principle to those who love freedom and justice on every continent.'' Over the past five decades, the force of human freedom has overcome hatred and resentment and overthrown tyrants in nations around the globe. Freedom is on the march, and today more people live in liberty than ever before.

The advance of freedom is the story of our time, and we have witnessed remarkable democratic progress in recent years. The people of Afghanistan elected their first democratic parliament in more than a generation. The people of Kyrgyzstan drove a corrupt regime from power and voted for democratic change. Ending 16 years of civil war and interim governments, the people of Liberia were able to go to the polls, electing Africa's first female president. The courageous citizens of Iraq reached yet another important milestone in their journey towards democracy by forming a national unity government based upon the constitution they approved last October. In Lebanon, citizens recovered their independence and chose their members of parliament in free elections. That newfound independence has come under attack in recent days from terrorists and their state sponsors, who see freedom and democracy as a threat. The United States and its allies will stand with those in Lebanon who continue to struggle for their independence and sovereignty and who refuse to give over their country to extremism and terror.

At this critical time in the history of freedom, no nation can evade the demands of human dignity. In countries like Iran, North Korea, Belarus, Burma, Syria, Zimbabwe, and Cuba, governments must become accountable to their citizens and embrace democracy. The desire for freedom is written in every human heart, and we can be confident that in this century freedom will continue to prevail.

This week is also an opportunity to honor those who have stood against oppression and advanced the fundamental right of all to live in liberty. The courage and sacrifice of these men and women reflect the fact that tyranny can never destroy the desire to be free. Inspired by their example, we will carry on their work to help others realize the universal gift of liberty and to spread the light of democracy to every corner of the world.

The Congress, by Joint Resolution approved July 17, 1959 (73 Stat. 212), has authorized and requested the President to issue a proclamation designating the third week in July of each year as ''Captive Nations Week.''

NOW, THEREFORE, I, GEORGE W. BUSH, President of the United States of America, do hereby proclaim July 16 through July 22, 2006, as Captive

Nations Week. I call upon the people of the United States to reaffirm their commitment to all those seeking liberty, justice, and self-determination.

IN WITNESS WHEREOF, I have hereunto set my hand this thirteenth day of July, in the year of our Lord two thousand six, and of the Independence of the United States of America the two hundred and thirty-first.

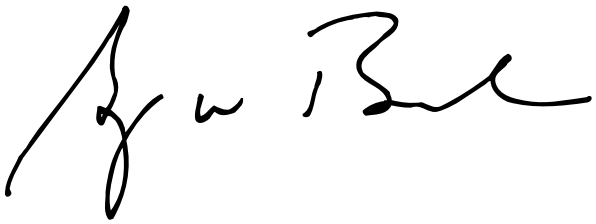

[FR Doc. 06–6403
Filed 7–19–06; 8:45 am]
Billing code 3195–01–P

Federal Register
Vol. 71, No. 139
Thursday, July 20, 2006

Presidential Documents

Title 3—

The President

Notice of July 18, 2006

Continuation of the National Emergency Blocking Property of Certain Persons and Prohibiting the Importation of Certain Goods from Liberia

On July 22, 2004, by Executive Order 13348, I declared a national emergency and ordered related measures blocking the property of certain persons and prohibiting the importation of certain goods from Liberia, pursuant to the International Emergency Economic Powers Act (50 U.S.C. 1701–1706). I took this action to deal with the unusual and extraordinary threat to the foreign policy of the United States constituted by the actions and policies of former Liberian President Charles Taylor and other persons, in particular their unlawful depletion of Liberian resources and their removal from Liberia and secreting of Liberian funds and property, which have undermined Liberia's transition to democracy and the orderly development of its political, administrative, and economic institutions and resources. I further noted that the Comprehensive Peace Agreement signed on August 18, 2003, and the related ceasefire had not yet been universally implemented throughout Liberia, and that the illicit trade in round logs and timber products was linked to the proliferation of and trafficking in illegal arms, which perpetuated the Liberian conflict and fueled and exacerbated other conflicts throughout West Africa.

Today, Liberia is making a transition to a peaceful, democratic order under the new administration of President Ellen Johnson-Sirleaf. Charles Taylor is in the custody of the Special Court for Sierra Leone in The Hague. However, the stability in Liberia is fragile. The actions and policies of Charles Taylor and others have left a legacy of destruction that still has the potential to undermine Liberia's transformation and recovery.

Because the actions and policies of these persons continue to pose an unusual and extraordinary threat to the foreign policy of the United States, the national emergency declared on July 22, 2004, and the measures adopted on that date to deal with that emergency, must continue in effect beyond July 22, 2006. Therefore, in accordance with section 202(d) of the National Emergencies Act (50 U.S.C. 1622(d)), I am continuing for 1 year the national emergency declared in Executive Order 13348.

This notice shall be published in the **Federal Register** and transmitted to the Congress.

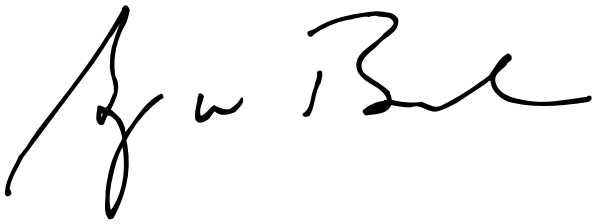

THE WHITE HOUSE,
July 18, 2006.

[FR Doc. 06–6404
Filed 7–19–06; 8:45 am]
Billing code 3195–01–P

Rules and Regulations

Federal Register

Vol. 71, No. 139

Thursday, July 20, 2006

This section of the FEDERAL REGISTER contains regulatory documents having general applicability and legal effect, most of which are keyed to and codified in the Code of Federal Regulations, which is published under 50 titles pursuant to 44 U.S.C. 1510.

The Code of Federal Regulations is sold by the Superintendent of Documents. Prices of new books are listed in the first FEDERAL REGISTER issue of each week.

OFFICE OF PERSONNEL MANAGEMENT

5 CFR Part 724

RIN 3206–AK38

Implementation of Title II of the Notification and Federal Employee Antidiscrimination and Retaliation Act of 2002—Notification & Training

AGENCY: Office of Personnel Management.

ACTION: Final rule.

SUMMARY: The Office of Personnel Management (OPM) is issuing final regulations to carry out the notification and training requirements of the Notification and Federal Employees Antidiscrimination and Retaliation Act of 2002 (No FEAR Act). This rule will implement the notice and training provisions of the No FEAR Act.

DATES: Effective September 18, 2006.

FOR FURTHER INFORMATION CONTACT: Gary D. Wahlert by telephone at (202) 606–2930; by FAX at (202) 606–2613; or by e-mail at *NoFEAR@opm.gov.*

SUPPLEMENTARY INFORMATION:

Background

The United States and its citizens are best served when the Federal workplace is free of discrimination and retaliation. In order to maintain a productive workplace that is fully engaged with the many important missions before the Government, Congress noted that it is essential that the rights of employees, former employees and applicants for Federal employment under Federal antidiscrimination and whistleblower protection laws be steadfastly protected. Congress also stated that agencies cannot be run effectively if those agencies practice or tolerate discrimination. Congress has found that notification of present and former Federal employees and applicants for Federal employment of their rights under antidiscrimination and whistleblower protection laws, combined with training of current employees, should increase Federal agency compliance with the laws. Congress entrusted the President with the authority to promulgate rules to carry out this title, and the President, in turn, delegated to OPM the authority to issue regulations to implement the notification and training provisions of Title II of the No FEAR Act, Public Law 107–174. These regulations carry out that authority.

Introduction

On February 28, 2005, OPM published at 70 FR 9544 (2005) a proposed rule implementing the notification and training provisions of the No FEAR Act and providing a 60-day comment period. On May 26, 2005, OPM at 70 FR 30380 (2005) extended the comment period to June 28, 2005. OPM received 18 comments from Federal agencies or departments, 6 comments from union representatives, and 15 comments from others, including the No FEAR Coalition. OPM commends and thanks all who have provided comments on this important topic, and OPM has carefully considered each comment.

Comments on Definitions

The proposed regulations defined the following terms that are used in the regulations: ''antidiscrimination laws,'' ''whistleblower protection laws,'' ''notice,'' and ''training.''

Several commenters suggested that the definition of antidiscrimination laws be expanded to cover matters under 5 U.S.C. 2302(b)(10) in order to include discrimination on the basis of sexual orientation as a form of prohibited discrimination under the No FEAR Act. Some stated that Executive Order 13087 (amending Executive Order 11478, ''Equal Employment Opportunity in the Federal Government'') prohibits discrimination on the basis of sexual orientation. OPM notes that the No FEAR Act does not directly refer to 5 U.S.C. 2302(b)(10) as a law covered by the Act or refer to Executive Order 13087 (or 11478) as being covered by the Act. The regulations address those matters directly identified in the No FEAR Act. Therefore, the suggestion is not adopted.

Several commenters suggested that the definition of whistleblower protection laws be expanded to cover whistleblower protections under other laws, e.g., Clean Air Act, Safe Drinking Water Act, and others. The No FEAR Act does not directly refer to whistleblower protections other than those established by the Whistleblower Protection Act of 1989, as amended. Again, the regulations address those matters directly identified in the No FEAR Act. Thus, the suggestion is not adopted.

Comments on Notification Obligations

The proposed regulations prescribed the ''time, form, and manner'' of the notices to employees, former employees, and applicants as required by section 202 of the No FEAR Act. The proposal included model paragraphs for agencies to use and proposed the time frames for the notification process.

Several commenters asked that OPM clarify what is meant by ''former employee'' in terms of agencies' obligation to notify former employees about their rights under Federal antidiscrimination and whistleblower protection laws. In this regard, the commenters wanted to know how long after an employee left an agency would it be until the agency's obligation to notify him or her expires. OPM notes that the No FEAR Act makes no distinction about former employees and when they are to be notified, that is, there is no time limitation on former employees' rights to be notified under the Act. OPM also notes, however, that the proposed rule did not require agencies to contact former employees and applicants individually but could provide notice though other means, e.g., posting a notice on agencies' Web sites. The final rule has been revised to make this clearer by requiring that the initial notice be published in the **Federal Register** and the same notice be posted on each agency's Web site.

Several commenters requested a clearer explanation of agency notice obligations and how they are to meet them. Some commenters requested that the regulations clarify agency responsibilities to post notices through the **Federal Register** process. One commenter suggested that OPM post a government-wide notice through this process on behalf of all agencies. OPM notes that the **Federal Register** process

was identified as an approved means to meet notification obligations under the Act in those cases where the agency does not have a Web site and the regulations have been clarified in this regard. Because the notice obligation rests with individual agencies, however, OPM declines to adopt the suggestion that OPM post a government-wide notice. At a minimum, agencies are required to include in their notices the text required by these regulations but may also add additional text in light of their individual agency circumstances. The final regulation also draws distinctions between the notice for employees and notice for former employees and applicants. Finally, one commenter asked whether a single posting on an agency's Internet Web site would meet the initial notification requirements of section 724.202(e) of the proposed rule. OPM's response is that it would not. The final rules require that all agencies' initial notices be published in the **Federal Register**. In addition, all agencies with Web sites are required to place the same notices on their sites where they are to remain until replaced or revised.

Several commenters suggested that agencies be afforded discretion and flexibility to modify the proposed model notice language to fit their needs rather than be required to use the model language verbatim. Because the notice obligation applies governmentwide, OPM believes that the required information established by these regulations should be consistent governmentwide. This would eliminate any confusion that might be created if content varied from agency to agency. Therefore, OPM does not adopt the suggestion and agencies are required to use the model language contained in the regulations. While the required information would be consistent governmentwide, OPM notes that agencies have the authority under the regulations to provide additional information within the notice. One commenter noted that the proposed section 724.202(f) would require agencies to provide a notice in alternative, accessible formats if requested by employees, former employees and applicants. The commenter was concerned that this might be read to impose requirements beyond those covered in section 508 of the Rehabilitation Act of 1973, as amended. OPM notes that section 508 is limited to electronic materials and the regulations address other materials such as (non-electronic) written notices. Therefore, OPM has not deleted the section but has modified it to state that agencies are obligated to provide requested notices in alternative, accessible formats to the extent required by law.

Several commenters suggested that the model language describing the bases for prohibited discrimination be expanded to include sexual orientation. As noted previously in discussing the definition of antidiscrimination laws, OPM has decided not to expand the regulations beyond the express terms of the No FEAR Act; thus the suggestion is not adopted. Similar suggestions that the model language include references to types of whistleblowing other than that protected by the Whistleblower Protection Act of 1989, as amended, are not adopted because OPM has decided not to expand the regulations as previously discussed.

One commenter suggested as unnecessary the last sentence in the ''Disciplinary Actions'' portion of the model language that states agencies may not take unfounded disciplinary actions. OPM believes it is important to state clearly that the No FEAR Act does not change existing laws with respect to taking disciplinary actions. As the No FEAR Act states in section 102, increased accountability under the Act is not furthered ''by taking unfounded disciplinary actions against managers or by violating the procedural rights of managers.'' Thus, OPM does not adopt the suggestion.

OPM also made a technical change to the ''Disciplinary Actions'' portion of the model language to clarify the circumstances in which disciplinary action may be appropriate. Accordingly, the final rule states that employees may be disciplined for conduct inconsistent with Federal antidiscrimination and whistleblower protection laws.

Several commenters requested clarification of the relationship of the No FEAR Act notification process to the Office of Special Counsel (OSC) certification program which calls for agencies to inform employees about their whistleblower protection rights. During the development of the proposed regulations, OPM consulted OSC on this issue and we agreed there is overlap between the two notification programs, with the No FEAR Act notification obligation being broader. As a result, a properly completed notice under the No FEAR Act might also meet that agency's obligations under OSC's certification program. Agencies are cautioned, however, to verify with OSC that their specific No FEAR notification process in fact does meet the requirements of the OSC's program. An agency's OSC-approved notice that includes the minimum model language in these regulations would satisfy the notification requirements of the No Fear Act.

One commenter suggested that the proposed model language stating that ''you may pursue a discrimination complaint by filing a grievance through your agency's administrative or negotiated grievance procedures, if such procedures apply and are available'' is in error. The commenter asserted that allegations of discrimination cannot be addressed by an agency's administrative grievance procedure. While OPM's former rules on administrative grievance procedures prohibited such coverage, OPM eliminated that restriction ten years ago (see 60 FR 47040, September 11, 1995), and some agencies do provide for such coverage in their administrative grievance procedure.

Comments on Training Obligations

The proposed regulations prescribed the requirements for Federal agencies to provide training under section 202 of the No FEAR Act to all their employees regarding their rights and remedies under Federal antidiscrimination and whistleblower protection laws. The proposed regulations called for agencies to develop written plans for meeting their training obligations under the Act and prescribed time limits for providing the training.

A commenter noted that some of the time frames in the regulations were expressed in ''business days'' while others used ''calendar days'' and suggested that the final rule use consistent terminology. OPM agrees that consistency within the regulations promotes better understanding and therefore adopts the suggestion. As a result, the time frames in the final regulations have been modified to use the term calendar days in all cases and the number of calendar days adjusted to reflect a comparable amount of actual time as proposed, *e.g.*, 90 calendar days instead of 60 business days.

One commenter suggested that the word ''content'' be replaced in section 724.203(b) of the proposed regulations concerning training plans because the ''content'' of training is already set by the No FEAR Act itself, *i.e.*, training on the rights and remedies available under the Antidiscrimination Laws and Whistleblower Protection Laws. OPM agrees and adopts the suggestion, changing ''content'' to ''training materials'' as a necessary element to be described in each agency's training plan.

In another reference to the content of agency training, a second commenter noted that section 102(5)(B) of the No FEAR Act provides that ''Federal

agencies should ensure that managers have adequate training in the management of a diverse workforce and in dispute resolution and other essential communication skills.'' This provision is part of a number of items in the Act reflecting the ''Sense of Congress''; however, this language is not repeated in the Act's section 202(c) which independently prescribes the content of agency training. Training on dispute resolution and communications skills, for example, may be beneficial, and agencies are free to include such topics in their training programs. Such topics are not, however, required under the Act and OPM declines to require such training as part of agencies' obligation to train employees on the rights and remedies available under the Antidiscrimination Laws and Whistleblower Protection Laws.

In addition to the above specific issues, a number of commenters suggested that OPM review and/or approve agency training programs, provide an oversight/enforcement mechanism on training, and receive periodic reports from agencies. Some commenters suggested that the No FEAR Coalition be a part of an OPM review process of agency training plans. OPM notes that under section 724.302(a)(9) of the proposed rule, each agency will be required to report on their written plan developed under 724.203(a) of this final rule. Copies of the agency's report will be provided to Members of Congress, the Chair of the EEOC, the Attorney General and the Director of OPM. This reporting mechanism will provide an appropriate level of oversight; therefore the suggestions are not adopted.

Several commenters suggested that the Equal Employment Opportunity Commission and the Office of Special Counsel develop training programs that agencies could use to meet their training obligations. OPM notes that the No FEAR Act did not task these agencies with that responsibility, and OPM will not do so. Agencies, however, may seek assistance and information from these agencies.

One commenter recommended that the final rule clarify that, while agencies are required to train their employees, this requirement does not extend to contract employees. OPM believes that the language is clear on its face that only current Federal employees are to be trained; thus OPM does not adopt the recommendation.

One commenter suggested that OPM require agencies to conduct face-to-face training as opposed to other types of training, e.g., computer-based training. OPM has determined that it is best left to agencies to decide the most appropriate method(s) of training for their employees. OPM therefore declines to adopt this suggestion.

One commenter noted that the proposed regulations appeared to require agencies to incorporate No FEAR Act training into their new employee orientation programs if they have such programs. While agencies may do so (and OPM believes this may be an efficient vehicle for agencies to meet their training obligations), OPM did not intend to prevent agencies from conducting other training for new employees outside of the orientation process. OPM's intent instead is to ensure that if training is not done during a new employee orientation, it is completed within 90 calendar days after an employee enters on duty. Therefore, OPM has modified the regulation to clarify that agencies may train new employees on the rights and remedies under Federal antidiscrimination and whistleblower protection laws using new employee orientation programs or other training programs as long as the applicable training program is completed within 90 calendar days after an employee enters on duty.

Many commenters expressed concern about the proposed requirement that agencies complete initial training of their employees under the No FEAR Act by September 30, 2005. Their concerns include the logistics of training large numbers of employees in a short time, the burden on small agencies with limited resources, and the Federal budget request cycle. A number of commenters suggested that September 30, 2006, would be a more feasible date for completing initial training. One commenter suggested moving the initial training date to 2007. Other commenters, including the No FEAR Coalition, however, expressed their deep concern about the amount of time already expended in developing the regulations governing training. In balancing these concerns, OPM notes the importance Congress has attached to the training obligation, and concludes that it is imperative that agencies be allowed sufficient time to develop and deliver to employees the quality training that they deserve and to which they are entitled under the Act. Therefore, OPM has decided to require that initial training be completed within 90 days of the effective date of these regulations.

Several commenters expressed concern about the proposed rule's requirement for a two-year training cycle after the initial training is completed. Some recommended no additional training and another recommended a five-year cycle. OPM has taken into account comments on the initial training, e.g., the logistics of training large numbers of employees, the burdens on small agencies, and the Federal budget request cycle. OPM believes, however, that on-going training is essential to maintaining a workforce that is knowledgeable about its rights and remedies under these laws. Accordingly, OPM is retaining the two-year training cycle as proposed.

Miscellaneous Comments

One commenter suggested that OPM issue regulations concerning the discipline of employees for violations of Federal antidiscrimination and whistleblower protection laws. OPM notes that section 204 of Title II of the No FEAR Act requires the President or his designee (OPM) to conduct a study of agency best practices in taking such disciplinary actions and then to develop advisory guidelines for agencies to follow in taking action. Because the No FEAR Act (through delegation by the President) already assigns this similar responsibility to OPM, the suggestion is not adopted.

Regulatory Flexibility Act

I certify that this regulation will not have a significant economic impact on a substantial number of small entities because the regulations pertain only to Federal employees and agencies.

E.O. 12866, Regulatory Review

This final rule has been reviewed by the Office of Management and Budget under Executive Order 12866.

E.O. 13132

This regulation will not have substantial direct effects on the States, on the relationship between the National Government and the States, or on distribution of power and responsibilities among the various levels of government. Therefore, in accordance with Executive Order 13132, it is determined that this rule does not have sufficient federalism implications to warrant preparation of a Federalism Assessment.

E.O. 12988, Civil Justice Reform

This regulation meets the applicable standard set forth in sections 3(a) and 3(b)(2) of Executive Order 12988.

Unfunded Mandates Reform Act of 1995

This rule will not result in the expenditure by State, local and tribal governments, in the aggregate, or by the private sector, of $100,000,000 or more in any one year, and it will not significantly or uniquely affect small governments. Therefore, no actions were

deemed necessary under the provisions of the Unfunded Mandates Reform Act of 1995.

Congressional Review Act

This action pertains to agency management, personnel and organization and does not substantially affect the rights or obligations of non-agency parties and, accordingly, is not a ''rule'' as that term is used by the Congressional Review Act (Subtitle E of the Small Business Regulatory Enforcement Fairness Act of 1996 (SBREFA)). Therefore, the reporting requirement of 5 U.S.C. 801 does not apply.

List of Subjects in 5 CFR Part 724

Administrative practice and procedure, Civil rights, Claims.

U.S. Office of Personnel Management.

Linda M. Springer,

Director.

■ Accordingly, OPM amends part 724 of title 5, Code of Federal Regulations, as follows:

PART 724—IMPLEMENTATION OF TITLE II OF THE NOTIFICATION AND FEDERAL EMPLOYEE ANTIDISCRIMINATION AND RETALIATION ACT OF 2002

■ 1. The authority citation for part 724 continues to read as follows:

Authority: Sec. 204 of Public Law 107–174; Presidential Memorandum dated July 8, 2003, ''Delegation of Authority Under Section 204(a) of the Notification and Federal Employee Antidiscrimination Act of 2002.''

Subpart A—Reimbursement of Judgment Fund

■ 2. In § 724.102 of subpart A, add new definitions for *Antidiscrimination Laws, Notice, Training,* and *Whistleblower Protection Laws* in alphabetical order to read as follows:

§ 724.102 Definitions.

* * * * *

Antidiscrimination Laws refers to 5 U.S.C. 2302(b)(1), 5 U.S.C. 2302(b)(9) as applied to conduct described in 5 U.S.C. 2302(b)(1), 29 U.S.C. 206(d), 29 U.S.C. 631, 29 U.S.C. 633a, 29 U.S.C. 791 and 42 U.S.C. 2000e–16.

* * * * *

Notice means the written information provided by Federal agencies about the rights and protections available under Federal Antidiscrimination Laws and Whistleblower Protection Laws.

* * * * *

Training means the process by which Federal agencies instruct their employees regarding the rights and remedies applicable to such employees under the Federal Antidiscrimination Laws and Whistleblower Protection Laws.

Whistleblower Protection Laws refers to 5 U.S.C. 2302(b)(8) or 5 U.S.C. 2302(b)(9) as applied to conduct described in 5 U.S.C. 2302(b)(8).

■ 3. A new subpart B to Part 724 is added to read as follows:

Subpart B—Notification of Rights and Protections and Training

Sec.
724.201 Purpose and scope.
724.202 Notice obligations.
724.203 Training obligations.

§ 724.201 Purpose and scope.

(a) This subpart implements Title II of the Notification and Federal Employee Antidiscrimination and Retaliation Act of 2002 concerning the obligation of Federal agencies to notify all employees, former employees, and applicants for Federal employment of the rights and protections available to them under the Federal Antidiscrimination Laws and Whistleblower Protection Laws. This subpart also implements Title II concerning the obligation of agencies to train their employees on such rights and remedies. The regulations describe agency obligations and the procedures for written notification and training.

(b) Pursuant to section 205 of the No FEAR Act, neither that Act nor this notice creates, expands or reduces any rights otherwise available to any employee, former employee or applicant under the laws of the United States, including the provisions of law specified in 5 U.S.C. 2302(d).

§ 724.202 Notice obligations.

(a) Each agency must provide notice to all of its employees, former employees, and applicants for Federal employment about the rights and remedies available under the Antidiscrimination Laws and Whistleblower Protection Laws applicable to them.

(b) The notice under this part must be titled, ''No FEAR Act Notice.''

(c) Each agency must provide initial notice within 60 calendar days after September 18, 2006. Thereafter, the notice must be provided by the end of each successive fiscal year and any posted materials must remain in place until replaced or revised.

(d) After the initial notice, each agency must provide the notice to new employees within 90 calendar days of entering on duty.

(e) Each agency must provide the notice to its employees in paper (e.g., letter, poster or brochure) and/or electronic form (e.g., e-mail, internal agency electronic site, or Internet Web site). Each agency must publish the *initial* notice in the **Federal Register**. Agencies with Internet Web sites must also post the notice on those Web sites, in compliance with section 508 of the Rehabilitation Act of 1973, as amended. For agencies with components that operate Internet Web sites, the notice must be made available by hyperlinks from the Internet Web sites of both the component and the parent agency. An agency may meet its paper and electronic notice obligation to former employees and applicants by publishing the initial notice in the **Federal Register** and posting the notice on its Internet Web site if it has one.

(f) To the extent required by law and upon request by employees, former employees and applicants, each agency must provide the notice in alternative, accessible formats.

(g) Unless an agency is exempt from the cited statutory provisions, the following is the minimum text to be included in the notice. Each agency may incorporate additional information within the model paragraphs, as appropriate.

Model Paragraphs

No Fear Act Notice

On May 15, 2002, Congress enacted the ''Notification and Federal Employee Antidiscrimination and Retaliation Act of 2002,'' which is now known as the No FEAR Act. One purpose of the Act is to ''require that Federal agencies be accountable for violations of antidiscrimination and whistleblower protection laws.'' Public Law 107–174, Summary. In support of this purpose, Congress found that ''agencies cannot be run effectively if those agencies practice or tolerate discrimination.'' Public Law 107–174, Title I, General Provisions, section 101(1).

The Act also requires this agency to provide this notice to Federal employees, former Federal employees and applicants for Federal employment to inform you of the rights and protections available to you under Federal antidiscrimination and whistleblower protection laws.

Antidiscrimination Laws

A Federal agency cannot discriminate against an employee or applicant with respect to the terms, conditions or privileges of employment on the basis of race, color, religion, sex, national origin, age, disability, marital status or political affiliation. Discrimination on these bases is prohibited by one or more of the following statutes: 5 U.S.C. 2302(b)(1), 29 U.S.C. 206(d), 29 U.S.C. 631, 29 U.S.C. 633a, 29 U.S.C. 791 and 42 U.S.C. 2000e–16.

If you believe that you have been the victim of unlawful discrimination on the basis of race, color, religion, sex, national origin or disability, you must contact an

Equal Employment Opportunity (EEO) counselor within 45 calendar days of the alleged discriminatory action, or, in the case of a personnel action, within 45 calendar days of the effective date of the action, before you can file a formal complaint of discrimination with your agency. *See, e.g.* 29 CFR 1614. If you believe that you have been the victim of unlawful discrimination on the basis of age, you must either contact an EEO counselor as noted above or give notice of intent to sue to the Equal Employment Opportunity Commission (EEOC) within 180 calendar days of the alleged discriminatory action. If you are alleging discrimination based on marital status or political affiliation, you may file a written complaint with the U.S. Office of Special Counsel (OSC) (*see* contact information below). In the alternative (or in some cases, in addition), you may pursue a discrimination complaint by filing a grievance through your agency's administrative or negotiated grievance procedures, if such procedures apply and are available.

Whistleblower Protection Laws

A Federal employee with authority to take, direct others to take, recommend or approve any personnel action must not use that authority to take or fail to take, or threaten to take or fail to take, a personnel action against an employee or applicant because of disclosure of information by that individual that is reasonably believed to evidence violations of law, rule or regulation; gross mismanagement; gross waste of funds; an abuse of authority; or a substantial and specific danger to public health or safety, unless disclosure of such information is specifically prohibited by law and such information is specifically required by Executive order to be kept secret in the interest of national defense or the conduct of foreign affairs.

Retaliation against an employee or applicant for making a protected disclosure is prohibited by 5 U.S.C. 2302(b)(8). If you believe that you have been the victim of whistleblower retaliation, you may file a written complaint (Form OSC–11) with the U.S. Office of Special Counsel at 1730 M Street NW., Suite 218, Washington, DC 20036–4505 or online through the OSC Web site—*http://www.osc.gov.*

Retaliation for Engaging in Protected Activity

A Federal agency cannot retaliate against an employee or applicant because that individual exercises his or her rights under any of the Federal antidiscrimination or whistleblower protection laws listed above. If you believe that you are the victim of retaliation for engaging in protected activity, you must follow, as appropriate, the procedures described in the Antidiscrimination Laws and Whistleblower Protection Laws sections or, if applicable, the administrative or negotiated grievance procedures in order to pursue any legal remedy.

Disciplinary Actions

Under the existing laws, each agency retains the right, where appropriate, to discipline a Federal employee for conduct that is inconsistent with Federal Antidiscrimination and Whistleblower Protection Laws up to and including removal. If OSC has initiated an investigation under 5 U.S.C. 1214, however, according to 5 U.S.C. 1214(f), agencies must seek approval from the Special Counsel to discipline employees for, among other activities, engaging in prohibited retaliation. Nothing in the No FEAR Act alters existing laws or permits an agency to take unfounded disciplinary action against a Federal employee or to violate the procedural rights of a Federal employee who has been accused of discrimination

Additional Information

For further information regarding the No FEAR Act regulations, refer to 5 CFR part 724, as well as the appropriate offices within your agency (e.g., EEO/civil rights office, human resources office or legal office). Additional information regarding Federal antidiscrimination, whistleblower protection and retaliation laws can be found at the EEOC Web site—*http://www.eeoc.gov* and the OSC Web site—*http://www.osc.gov.*

Existing Rights Unchanged

Pursuant to section 205 of the No FEAR Act, neither the Act nor this notice creates, expands or reduces any rights otherwise available to any employee, former employee or applicant under the laws of the United States, including the provisions of law specified in 5 U.S.C. 2302(d).

§ 724.203 Training obligations.

(a) Each agency must develop a written plan to train all of its employees (including supervisors and managers) about the rights and remedies available under the Antidiscrimination Laws and Whistleblower Protection Laws applicable to them.

(b) Each agency shall have the discretion to develop the instructional materials and method of its training plan. Each agency training plan shall describe:

(1) The instructional materials and method of the training,

(2) The training schedule, and

(3) The means of documenting completion of training.

(c) Each agency may contact EEOC and/or OSC for information and/or assistance regarding the agency's training program. Neither agency, however, shall have authority under this regulation to review or approve an agency's training plan.

(d) Each agency is *encouraged* to implement its training as soon as possible, but *required* to complete the initial training under this subpart for all employees (including supervisors and managers) by December 17, 2006. Thereafter, each agency must train all employees on a training cycle of no longer than every 2 years.

(e) After the initial training is completed, each agency must train new employees as part of its agency orientation program or other training program. Any agency that does not use a new employee orientation program for this purpose must train new employees within 90 calendar days of the new employees' appointment.

[FR Doc. E6–11541 Filed 7–19–06; 8:45 am]

BILLING CODE 6325–39–P

DEPARTMENT OF TRANSPORTATION

Federal Aviation Administration

14 CFR Part 23

[Docket No. CE194, Special Condition 23–134A–SC]

Special Conditions; Cirrus Design Corporation SR22; Protection of Systems for High Intensity Radiated Fields (HIRF)

AGENCY: Federal Aviation Administration (FAA), DOT.

ACTION: Amended final special conditions; request for comments.

SUMMARY: These amended special conditions are issued to Cirrus Design Corporation, 4515 Taylor Circle, Duluth, Minnesota 55811, for a Type Design Change. This special condition amends special condition 23–134–SC, which was published February 4, 2003 (68FR 5538), for installation of an Electronic Flight Instrument System (EFIS) manufactured by Avidyne Corporation on the SR22. This amendment covers additional electronic equipment, such as a digital autopilot and/or engine related systems designed to perform critical functions on the SR22 and other models listed on the same Type Data Sheet, A00009CH.

The airplanes will have novel and unusual design features when compared to the state of technology envisaged in the applicable airworthiness standards. The applicable regulations do not contain adequate or appropriate airworthiness standards for the protection of these systems from the effects of high intensity radiated fields (HIRF). These special conditions contain the additional safety standards that the Administrator considers necessary to establish a level of safety equivalent to the airworthiness standards applicable to these airplanes.

DATES: The effective date of these special conditions is July 11, 2006.

Comments must be received on or before August 21, 2006.

ADDRESSES: Comments on these special conditions may be mailed in duplicate

to: Federal Aviation Administration, Regional Counsel, ACE–7, Attention: Rules Docket Clerk, Docket No. CE194, Room 506, 901 Locust, Kansas City, Missouri 64106. All comments must be marked: Docket No. CE194. Comments may be inspected in the Rules Docket weekdays, except Federal holidays, between 7:30 a.m. and 4 p.m.

FOR FURTHER INFORMATION CONTACT: Wes Ryan, Aerospace Engineer, Standards Office (ACE–110), Small Airplane Directorate, Aircraft Certification Service, Federal Aviation Administration, 901 Locust, Room 301, Kansas City, Missouri 64106; telephone (816) 329–4113.

SUPPLEMENTARY INFORMATION: The FAA has determined that notice and opportunity for prior public comment hereon are impracticable because these procedures have been subject to the public comment process several times in the past without substantive comment. The FAA, therefore, finds that good cause exists for making these special conditions effective upon issuance.

Comments Invited

Interested persons are invited to submit such written data, views, or arguments as they may desire. Communications should identify the regulatory docket or notice number and be submitted in duplicate to the address specified above. All communications received on or before the closing date for comments will be considered by the Administrator. The special conditions may be changed in light of the comments received. All comments received will be available in the Rules Docket for examination by interested persons, both before and after the closing date for comments. A report summarizing each substantive public contact with FAA personnel concerning this rulemaking will be filed in the docket. Commenters wishing the FAA to acknowledge receipt of their comments submitted in response to this notice must include a self-addressed, stamped postcard on which the following statement is made: ''Comments to Docket No. CE194.'' The postcard will be date stamped and returned to the commenter.

Background

In February 2005, Cirrus Design Corporation, 4515 Taylor Circle, Duluth, Minnesota 55811 made application to the FAA for a change in Type Design for the SR22 airplane model listed on Type Data Sheet A00009CH. The proposed modification incorporates novel or unusual design features that are potentially vulnerable to HIRF external to the airplane.

Type Certification Basis

Under the provisions of 14 CFR part 21, § 21.101, Cirrus Design Corporation must show that affected airplane models, as changed, continue to meet the applicable provisions of the regulations incorporated by reference on Type Data Sheet A00009CH, or the applicable regulations in effect on the date of application for the change. The regulations incorporated by reference in the type certificate are commonly referred to as the ''original type certification basis.'' In addition, the type certification basis of airplane models that embody this modification will include § 23.1301 of Amendment 23–20; §§ 23.1309, 23.1311, and 23.1321 of Amendment 23–49; and § 23.1322 of Amendment 23–43; exemptions, if any; and the special conditions adopted by this rulemaking action.

Discussion

If the Administrator finds that the applicable airworthiness standards do not contain adequate or appropriate safety standards because of novel or unusual design features of an airplane, special conditions are prescribed under the provisions of § 21.16.

Special conditions, as appropriate, as defined in § 11.19, are issued in accordance with § 11.38 after public notice and become part of the type certification basis in accordance with § 21.101(b)(2) of Amendment 21–69.

Special conditions are initially applicable to the model for which they are issued. Should the applicant apply for a supplemental type certificate to modify any other model already included on the same type certificate to incorporate the same novel or unusual design feature, the special conditions would also apply to the other model under the provisions of § 21.101.

Novel or Unusual Design Features

Cirrus Design Corporation plans to incorporate certain novel and unusual design features into an airplane for which the airworthiness standards do not contain adequate or appropriate safety standards for protection from the effects of HIRF. These features include EFIS, which are susceptible to the HIRF environment, that were not envisaged by the existing regulations for this type of airplane.

Protection of Systems From High Intensity Radiated Fields (HIRF)

Recent advances in technology have given rise to the application in aircraft designs of advanced electrical and electronic systems that perform functions required for continued safe flight and landing. Due to the use of sensitive solid-state advanced components in analog and digital electronics circuits, these advanced systems are readily responsive to the transient effects of induced electrical current and voltage caused by the HIRF. The HIRF can degrade electronic systems performance by damaging components or upsetting system functions.

Furthermore, the HIRF environment has undergone a transformation that was not foreseen when the current requirements were developed. Higher energy levels are radiated from transmitters that are used for radar, radio, and television. Also, the number of transmitters has increased significantly. There is also uncertainty concerning the effectiveness of airframe shielding for HIRF. Furthermore, coupling to cockpit-installed equipment through the cockpit window apertures is undefined.

The combined effect of the technological advances in airplane design and the changing environment has resulted in an increased level of vulnerability of electrical and electronic systems required for the continued safe flight and landing of the airplane. Effective measures against the effects of exposure to HIRF must be provided by the design and installation of these systems. The accepted maximum energy levels in which civilian airplane system installations must be capable of operating safely are based on surveys and analysis of existing radio frequency emitters. These special conditions require that the airplane be evaluated under these energy levels for the protection of the electronic system and its associated wiring harness. These external threat levels, which are lower than previous required values, are believed to represent the worst case to which an airplane would be exposed in the operating environment.

These special conditions require qualification of systems that perform critical functions, as installed in aircraft, to the defined HIRF environment in paragraph 1 or, as an option to a fixed value using laboratory tests, in paragraph 2, as follows:

(1) The applicant may demonstrate that the operation and operational capability of the installed electrical and electronic systems that perform critical functions are not adversely affected when the aircraft is exposed to the HIRF environment defined below:

Frequency	Field strength (volts per meter)	
	Peak	Average
10 kHz–100 kHz	50	50
100 kHz–500 kHz	50	50
500 kHz–2 MHz	50	50
2 MHz–30 MHz	100	100
30 MHz–70 MHz	50	50
70 MHz–100 MHz	50	50
100 MHz–200 MHz	100	100
200 MHz–400 MHz	100	100
400 MHz–700 MHz	700	50
700 MHz–1 GHz	700	100
1 GHz–2 GHz	2000	200
2 GHz–4 GHz	3000	200
4 GHz–6 GHz	3000	200
6 GHz–8 GHz	1000	200
8 GHz–12 GHz	3000	300
12 GHz–18 GHz	2000	200
18 GHz–40 GHz	600	200

The field strengths are expressed in terms of peak root-mean-square (rms) values.

or,

(2) The applicant may demonstrate by a system test and analysis that the electrical and electronic systems that perform critical functions can withstand a minimum threat of 100 volts per meter, electrical field strength, from 10 kHz to 18 GHz. When using this test to show compliance with the HIRF requirements, no credit is given for signal attenuation due to installation.

A preliminary hazard analysis must be performed by the applicant, for approval by the FAA, to identify either electrical or electronic systems that perform critical functions. The term ''critical'' means those functions whose failure would contribute to, or cause, a failure condition that would prevent the continued safe flight and landing of the airplane. The systems identified by the hazard analysis that perform critical functions are candidates for the application of HIRF requirements. A system may perform both critical and non-critical functions. Primary electronic flight display systems, and their associated components, perform critical functions such as attitude, altitude, and airspeed indication. The HIRF requirements apply only to critical functions.

Compliance with HIRF requirements may be demonstrated by tests, analysis, models, similarity with existing systems, or any combination of these. Service experience alone is not acceptable since normal flight operations may not include an exposure to the HIRF environment. Reliance on a system with similar design features for redundancy as a means of protection against the effects of external HIRF is generally insufficient since all elements of a redundant system are likely to be exposed to the fields concurrently.

Applicability

As discussed above, these special conditions are applicable to one modification to the airplane models listed under the heading ''Type Certification Basis.'' Should Cirrus Design Corporation apply at a later date for a supplemental type certificate to modify any other model on the same type certificate to incorporate the same novel or unusual design feature, the special conditions would apply to that model as well under the provisions of § 21.101.

Conclusion

This action affects only certain novel or unusual design features of one modification to several models of airplanes. It is not a rule of general applicability and affects only the applicant who applied to the FAA for approval of these features on the airplane.

The substance of these special conditions has been subjected to the notice and comment period in several prior instances and has been derived without substantive change from those previously issued. It is unlikely that prior public comment would result in a significant change from the substance contained herein. For this reason, and because a delay would significantly affect the certification of some airplane models, the FAA has determined that prior public notice and comment are unnecessary and impracticable, and good cause exists for adopting these special conditions upon issuance. The FAA is requesting comments to allow interested persons to submit views that may not have been submitted in response to the prior opportunities for comment described above.

List of Subjects in 14 CFR Part 23

Aircraft, Aviation safety, Signs and symbols.

Citation

The authority citation for these special conditions is as follows:

Authority: 49 U.S.C. 106(g), 40113 and 44701; 14 CFR 21.16 and 21.101; and 14 CFR 11.38 and 11.19.

The Special Conditions

Accordingly, pursuant to the authority delegated to me by the Administrator, the following special conditions are issued as part of the type certification basis for airplane models listed under the ''Type Certification Basis'' heading modified by Cirrus Design Corporation to add an EFIS.

1. *Protection of Electrical and Electronic Systems from High Intensity Radiated Fields (HIRF).* Each system that performs critical functions must be designed and installed to ensure that the operations, and operational capabilities of these systems to perform critical functions, are not adversely affected when the airplane is exposed to high intensity radiated electromagnetic fields external to the airplane.

2. For the purpose of these special conditions, the following definition applies: *Critical Functions:* Functions whose failure would contribute to, or cause, a failure condition that would prevent the continued safe flight and landing of the airplane.

Issued in Kansas City, Missouri on July 11, 2006.

Steve W. Thompson,

Acting Manager, Small Airplane Directorate, Aircraft Certification Service.

[FR Doc. E6–11483 Filed 7–19–06; 8:45 am]

BILLING CODE 4910–13–P

DEPARTMENT OF TRANSPORTATION

Federal Aviation Administration

14 CFR Part 23

[Docket No. CE239; Special Condition No. 23–179–SC]

Special Conditions: Societe de Motorisation Aeronautiques (SMA) Engines, Inc., Cessna Models 182Q and 182R; Diesel Cycle Engine Using Turbine (Jet) Fuel

AGENCY: Federal Aviation Administration (FAA), DOT.

ACTION: Final special conditions.

SUMMARY: These special conditions are issued for the Cessna Models 182Q and 182R airplanes with a Societe de Motorisation Aeronautiques (SMA) Model SR305–230 aircraft diesel engine (ADE). This airplane will have a novel or unusual design feature(s) associated with the installation of a diesel cycle engine utilizing turbine (jet) fuel. The applicable airworthiness regulations do not contain adequate or appropriate safety standards for installation of this new technology engine. These special conditions contain the additional safety standards that the Administrator considers necessary to establish a level of safety equivalent to that established by the existing airworthiness standards.

DATES: *Effective Date:* July 11, 2006.

FOR FURTHER INFORMATION CONTACT: Peter L. Rouse, Federal Aviation Administration, Aircraft Certification Service, Small Airplane Directorate, ACE–111, 901 Locust, Kansas City, Missouri, 816–329–4135, fax 816–329–4090.

SUPPLEMENTARY INFORMATION:

Background

On March 19, 2004, SMA Engines, Inc., applied for a supplemental type certificate for the installation of an SMA Model SR305–230 ADE, type certificated in the United States, type certificate number E00067EN, in the Cessna Models 182Q and 182R airplanes. The Cessna Models 182Q and 182R airplanes, approved under Type Certificate No. 3A13, are four-place, single engine airplanes.

In anticipation of the reintroduction of diesel engine technology into the small airplane fleet, the FAA issued Policy Statement PS–ACE100–2002–004 on May 15, 2004, which identified areas of technological concern involving introduction of new technology diesel engines into small airplanes. For a more detailed summary of the FAA's development of diesel engine requirements, refer to this policy.

The general areas of concern involved the power characteristics of the diesel engines, the use of turbine fuel in an airplane class that has typically been powered by gasoline fueled engines, and the vibration characteristics and failure modes of diesel engines. These concerns were identified after review of the historical record of diesel engine used in aircraft and a review of the 14 CFR part 23 regulations, which identified specific regulatory areas that needed to be evaluated for applicability to diesel engine installations. These concerns are not considered universally applicable to all types of possible diesel engines and diesel engine installations. However, after review of the SMA installation, and applying the provisions of the diesel policy, the FAA proposed these fuel system and engine related special conditions. Other special conditions issued in a separate notice include special conditions for HIRF and application of § 23.1309 provisions to the Full Authority Digital Engine Control (FADEC).

Type Certification Basis

Under the provisions of § 21.101, SMA Engines, Inc., must show that the Cessna Models 182Q and 182R airplanes with the installation of an SMA Model SR305–230 ADE meet the applicable provisions of 14 CFR part 23, as amended by Amendments 23–1 through 23–51 and CAR 3 thereto. In addition, the certification basis includes special conditions and equivalent levels of safety for the following:

Special Conditions:

- Engine torque (Provisions similar to § 23.361, paragraphs (b)(1) and (c)(3)).
- Flutter (Compliance with § 23.629, paragraphs (e)(1) and (2)).
- Powerplant—Installation (Provisions similar to § 23.901(d)(1) for turbine engines).
- Powerplant—Fuel System—Fuel system with water saturated fuel (Compliance with § 23.951 requirements).
- Powerplant—Fuel System—Fuel system hot weather operation (Compliance with § 23.961 requirements).
- Powerplant—Fuel system—Fuel tank filler connection (Compliance with § 23.973(f) requirements).
- Powerplant—Fuel system—Fuel tank outlet (Compliance with § 23.977 requirements).
- Equipment—General—Powerplant Instruments (Compliance with § 23.1305 requirements).
- Operating Limitations and Information—Powerplant limitations—Fuel grade or designation (Compliance with § 23.1521(d) requirements).
- Markings And Placards—Miscellaneous markings and placards—Fuel, oil, and coolant filler openings (Compliance with § 23.1557(c)(1) requirements).
- Powerplant—Fuel system—Fuel Freezing.
- Powerplant Installation—Vibration levels.
- Powerplant Installation—One cylinder inoperative.
- Powerplant Installation—High Energy Engine Fragments.

Equivalent levels of safety for:

- Cockpit controls—23.777(d).
- Motion and effect of cockpit controls—23.779(b).
- Ignition switches—23.1145.

The type certification basis includes exemptions, if any; equivalent level of safety findings, if any; and the special conditions adopted by this rulemaking action.

If the Administrator finds that the applicable airworthiness regulations (i.e., part 23) do not contain adequate or appropriate safety standards for the Cessna Models 182Q and 182R airplanes with the installation of an SMA Model SR305–230 ADE because of a novel or unusual design feature, special conditions are prescribed under the provisions of § 21.16.

In addition to the applicable airworthiness regulations and special conditions, the Cessna Models 182Q and 182R airplanes with the installation of an SMA Model SR305–230 ADE must comply with the fuel vent and exhaust emission requirements of 14 CFR part 34 and the noise certification requirements of 14 CFR part 36.

Special conditions, as appropriate, as defined in 11.19, are issued in accordance with § 11.38, and become part of the type certification basis in accordance with § 21.101(b)(2).

Special conditions are initially applicable to the model for which they are issued. Should the applicant apply for a supplemental type certificate to modify any other model included on the same type certificate to incorporate the same novel or unusual design feature, the special conditions would also apply to the other model under the provisions of § 21.101(a)(1).

Novel or Unusual Design Features

The Cessna Models 182Q and 182R airplanes with the installation of an SMA Model SR305–230 will incorporate the following novel or unusual design features:

The Cessna Models 182Q and 182R airplanes with the installation of an SMA Model SR305–230 will incorporate an aircraft diesel engine utilizing turbine (jet) fuel.

Discussion of Comments

A notice of proposed special conditions No. 23–06–01–SC for the Cessna Models 182Q and 182R airplanes with a SMA Model SR305–230 ADE was published on February 17, 2006 (71 FR 8543). No comments were received, and the special conditions are adopted as proposed.

Applicability

As discussed above, these special conditions are applicable to the Cessna Models 182Q and 182R airplanes with an SMA Model SR305–230 ADE. Should SMA apply at a later date for a supplemental type certificate to modify any other model included on Type Certificate No. 3A13 to incorporate the same novel or unusual design feature, the special conditions would apply to that model as well under the provisions of § 21.101(a)(1).

Conclusion

This action affects only certain novel or unusual design features on the Cessna Models 182Q and 182R airplanes with a SMA Model SR305–230 ADE. It is not a rule of general applicability, and it affects only the applicant who applied to the FAA for approval of these features on the airplane.

List of Subjects in 14 CFR Part 23

Aircraft, Aviation safety, Signs and symbols.

Citation

■ The authority citation for these special conditions is as follows:

Authority: 49 U.S.C. 106(g), 40113 and 44701; 14 CFR 21.16 and 21.101 and 14 CFR 11.38 and 11.19.

The Special Conditions

■ Accordingly, pursuant to the authority delegated to me by the Administrator, the following special conditions are issued as part of the type certification basis for the Cessna Models 182Q and 182R airplanes with an SMA Model SR305–230 ADE.

1. Engine Torque (Provisions Similar to § 23.361, Paragraphs (b)(1) and (c)(3))

(a) For diesel engine installations, the engine mounts and supporting structure must be designed to withstand the following:

(1) A limit engine torque load imposed by sudden engine stoppage due to malfunction or structural failure.

The effects of sudden engine stoppage may alternately be mitigated to an acceptable level by utilization of isolators, dampers, clutches and similar provisions, so that unacceptable load levels are not imposed on the previously certificated structure.

(b) The limit engine torque obtained in CAR 3.195(a)(1) and (a)(2) or 14 CFR 23.361(a)(1) and (a)(2) must be obtained by multiplying the mean torque by a factor of four in lieu of the factor of two required by CAR 3.195(b) and 14 CFR 23.361(c)(3).

2. Flutter—(Compliance With § 23.629 (e)(1) and (e)(2) Requirements)

The flutter evaluation of the airplane done in accordance with 14 CFR 23.629 must include—

(a) Whirl mode degree of freedom, which takes into account the stability of the plane of rotation of the propeller and significant elastic, inertial, and aerodynamic forces, and

(b) Propeller, engine, engine mount, and airplane structure stiffness, and damping variations appropriate to the particular configuration, and

(c) Showing the airplane is free from flutter with one cylinder inoperative.

3. Powerplant—Installation (Provisions Similar to § 23.901(d)(1) for Turbine Engines)

Considering the vibration characteristics of diesel engines, the applicant must comply with the following:

(a) Each diesel engine installation must be constructed and arranged to result in vibration characteristics that—

(1) Do not exceed those established during the type certification of the engine; and

(2) Do not exceed vibration characteristics that a previously certificated airframe structure has been approved for—

(i) Unless such vibration characteristics are shown to have no effect on safety or continued airworthiness, or

(ii) Unless mitigated to an acceptable level by utilization of isolators, dampers, clutches and similar provisions, so that unacceptable vibration levels are not imposed on the previously certificated structure.

4. Powerplant—Fuel System—Fuel System With Water Saturated Fuel (Compliance With § 23.951 Requirements)

Considering the fuel types used by diesel engines, the applicant must comply with the following:

Each fuel system for a diesel engine must be capable of sustained operation throughout its flow and pressure range with fuel initially saturated with water at 80 °F and having 0.75cc of free water per gallon added and cooled to the most critical condition for icing likely to be encountered in operation.

Methods of compliance that are acceptable for turbine engine fuel systems requirements of § 23.951(c) are also considered acceptable for this requirement.

5. Powerplant—Fuel System—Fuel Flow (Compliance With § 23.955(c) Requirements)

In lieu of 14 CFR 23.955(c), engine fuel system must provide at least 100 percent of the fuel flow required by the engine, or the fuel flow required to prevent engine damage, if that flow is greater than 100 percent. The fuel flow rate must be available to the engine under each intended operating condition and maneuver. The conditions may be simulated in a suitable mockup. This flow must be shown in the most adverse fuel feed condition with respect to altitudes, attitudes, and any other condition that is expected in operation.

6. Powerplant—Fuel System—Fuel System Hot Weather Operation (Compliance With § 23.961 Requirements)

In place of compliance with § 23.961, the applicant must comply with the following:

Each fuel system must be free from vapor lock when using fuel at its critical temperature, with respect to vapor formation, when operating the airplane in all critical operating and environmental conditions for which approval is requested. For turbine fuel, or for aircraft equipped with diesel cycle engines that use turbine or diesel type fuels, the initial temperature must be 110 °F, −0°, +5° or the maximum outside air temperature for which approval is requested, whichever is more critical.

The fuel system must be in an operational configuration that will yield the most adverse, that is, conservative results.

To comply with this requirement, the applicant must use the turbine fuel requirements and must substantiate these by flight-testing, as described in Advisory Circular AC 23–8B, Flight Test Guide for Certification of Part 23 Airplanes.

7. Powerplant—Fuel System—Fuel Tank Filler Connection (Compliance With § 23.973(f) Requirements)

In place of compliance with § 23.973(e) and (f), the applicant must comply with the following:

For airplanes that operate on turbine or diesel type fuels, the inside diameter of the fuel filler opening must be no smaller than 2.95 inches.

8. Powerplant—Fuel System—Fuel Tank Outlet (Compliance With § 23.977 Requirements)

In place of compliance with § 23.977(a)(1) and (a)(2), the applicant will comply with the following:

There must be a fuel strainer for the fuel tank outlet or for the booster pump. This strainer must, for diesel engine powered airplanes, prevent the passage of any object that could restrict fuel flow or damage any fuel system component.

9. Equipment—General—Powerplant Instruments (Compliance With § 23.1305)

In addition to compliance with § 23.1305, the applicant will comply with the following:

The following are required in addition to the powerplant instruments required in § 23.1305:

(a) A fuel temperature indicator.

(b) An outside air temperature (OAT) indicator.

(c) An indicating means for the fuel strainer or filter required by § 23.997 to indicate the occurrence of contamination of the strainer or filter before it reaches the capacity established in accordance with § 23.997(d).

Alternately, no indicator is required if the engine can operate normally for a specified period with the fuel strainer exposed to the maximum fuel contamination as specified in MIL–5007D and provisions for replacing the fuel filter at this specified period (or a shorter period) are included in the maintenance schedule for the engine installation.

10. Operating Limitations and Information—Powerplant Limitations—Fuel Grade or Designation (Compliance With § 23.1521 Requirements)

All engine parameters that have limits specified by the engine manufacturer for takeoff or continuous operation must be investigated to ensure they remain within those limits throughout the expected flight and ground envelopes (e.g., maximum and minimum fuel temperatures, ambient temperatures, as applicable, etc.). This is in addition to the existing requirements specified by 14 CFR 23.1521(b) and (c). If any of those limits can be exceeded, there must be continuous indication to the flight crew of the status of that parameter with appropriate limitation markings.

Instead of compliance with § 23.1521(d), the applicant must comply with the following:

The minimum fuel designation (for diesel engines) must be established so that it is not less than that required for the operation of the engines within the limitations in paragraphs (b) and (c) of § 23.1521.

11. Markings and Placards—Miscellaneous Markings and Placards—Fuel, Oil, and Coolant Filler Openings (Compliance With § 23.1557(c)(1) Requirements)

Instead of compliance with § 23.1557(c)(1), the applicant must comply with the following:

Fuel filler openings must be marked at or near the filler cover with—

For diesel engine-powered airplanes—

(a) The words ''Jet Fuel''; and

(b) The permissible fuel designations, or references to the Airplane Flight Manual (AFM) for permissible fuel designations.

(c) A warning placard or note that states the following or similar:

''Warning—this airplane equipped with an aircraft diesel engine, service with approved fuels only.''

The colors of this warning placard should be black and white.

12. Powerplant—Fuel System—Fuel-Freezing

If the fuel in the tanks cannot be shown to flow suitably under all possible temperature conditions, then fuel temperature limitations are required. These will be considered as part of the essential operating parameters for the aircraft and must be limitations.

A minimum takeoff temperature limitation will be determined by testing to establish the minimum cold-soaked temperature at which the airplane can operate. The minimum operating temperature will be determined by testing to establish the minimum operating temperature acceptable after takeoff from the minimum takeoff temperature. If low temperature limits are not established by testing, then a minimum takeoff and operating fuel temperature limit of 5 °F above the gelling temperature of Jet A will be imposed along with a display in the cockpit of the fuel temperature. Fuel temperature sensors will be located in the coldest part of the tank if applicable.

13. Powerplant Installation—Vibration Levels

Vibration levels throughout the engine operating range must be evaluated and:

(1) Vibration levels imposed on the airframe must be less than or equivalent to those of the gasoline engine; or

(2) Any vibration level that is higher than that imposed on the airframe by the replaced gasoline engine must be considered in the modification and the effects on the technical areas covered by the following paragraphs must be investigated: 14 CFR 23.251; 23.613; 23.627; 23.629 (or CAR 3.159, as applicable to various models); 23.572; 23.573; 23.574 and 23.901.

Vibration levels imposed on the airframe can be mitigated to an acceptable level by utilization of isolators, dampers, clutches, and similar provisions, so that unacceptable vibration levels are not imposed on the previously certificated structure.

14. Powerplant Installation—One Cylinder Inoperative

It must be shown by test or analysis, or by a combination of methods, that the airframe can withstand the shaking or vibratory forces imposed by the engine if a cylinder becomes inoperative. Diesel engines of conventional design typically have extremely high levels of vibration when a cylinder becomes inoperative.

No unsafe condition will exist in the case of an inoperative cylinder before the engine can be shut down. The resistance of the airframe structure, propeller, and engine mount to shaking moment and vibration damage must be investigated. It must be shown by test or analysis, or by a combination of methods, that shaking and vibration damage from the engine with an inoperative cylinder will not cause a catastrophic airframe, propeller, or engine mount failure.

15. Powerplant Installation—High Energy Engine Fragments

It may be possible for diesel engine cylinders (or portions thereof) to fail and physically separate from the engine at high velocity (due to the high internal pressures). This failure mode will be considered possible in engine designs with removable cylinders or other non-integral block designs. The following is required:

(1) It must be shown by the design of the engine that engine cylinders, other engine components or portions thereof (fragments) cannot be shed or blown off of the engine in the event of a catastrophic engine failure; or

(2) It must be shown that all possible liberated engine parts or components do not have adequate energy to penetrate engine cowlings; or

(3) Assuming infinite fragment energy, and analyzing the trajectory of the probable fragments and components, any hazard due to liberated engine parts or components will be minimized and the possibility of crew injury eliminated. Minimization must be considered during initial design and not presented as an analysis after design completion.

Issued in Kansas City, Missouri, on July 11, 2006.

Steve W. Thompson,

Acting Manager, Small Airplane Directorate, Aircraft Certification Service.

[FR Doc. E6–11474 Filed 7–19–06; 8:45 am]

BILLING CODE 4910–13–P

DEPARTMENT OF TRANSPORTATION

Federal Aviation Administration

14 CFR Part 23

[Docket No. CE244, Special Condition 23–184A–SC]

Special Condition; Avidyne Corporation, Inc.; Various Airplane Models; Protection of Systems for High Intensity Radiated Fields (HIRF)

AGENCY: Federal Aviation Administration (FAA), DOT.

ACTION: Amended final special conditions; request for comments.

SUMMARY: These amended special conditions are issued to Avidyne Corporation, 55 Old Bedford Road, Lincoln, MA 01773. This is an amendment to special condition 23–184–SC, which was published on May 23, 2006 (71 FR 29574), for installation of an EFIS manufactured by Avidyne on various models. The original issue left off the Cirrus Design Corporation SR22, which was the first model to be certified under the STC.

The airplanes listed under this multi-model approval will have novel and unusual design features when compared

to the state of technology envisaged in the applicable airworthiness standards. These novel and unusual design features include the installation of the Entegra II Avionics System, consisting of: (2) Model 700–0003–( ) Integrated Flight Displays (IFD), (2) Model 700–00011–( ) Magnetometer/OAT sensors, and (1) Model 700–00085–000 Keyboard/Controller. These components are all manufactured by Avidyne Corporation, Inc. The applicable regulations do not contain adequate or appropriate airworthiness standards for the protection of these systems from the effects of high intensity radiated fields (HIRF). These special conditions contain the additional safety standards that the Administrator considers necessary to establish a level of safety equivalent to the airworthiness standards applicable to these airplanes.

DATES: The effective date of these special conditions is May 10, 2006. Comments must be received on or before August 21, 2006.

ADDRESSES: Comments on these special conditions may be mailed in duplicate to: Federal Aviation Administration, Regional Counsel, ACE–7, Attention: Rules Docket Clerk, Docket No. CE244, Room 506, 901 Locust, Kansas City, Missouri 64106. All comments must be marked: Docket No. CE244. Comments may be inspected in the Rules Docket weekdays, except Federal holidays, between 7:30 a.m. and 4 p.m.

FOR FURTHER INFORMATION CONTACT: Wes Ryan, Aerospace Engineer, Standards Office (ACE–110), Small Airplane Directorate, Aircraft Certification Service, Federal Aviation Administration, 901 Locust, Room 301, Kansas City, Missouri 64106; telephone (816) 329–4123.

SUPPLEMENTARY INFORMATION: The FAA has determined that notice and opportunity for prior public comment hereon are impracticable because the substance of these special conditions has been subject to the public comment process in several prior instances with no substantive comments received. The FAA, therefore, finds that good cause exists for making these special conditions effective upon issuance.

Comments Invited

Interested persons are invited to submit such written data, views, or arguments, as they may desire. Communications should identify the regulatory docket or notice number and be submitted in duplicate to the address specified above. All communications received on or before the closing date for comments will be considered by the Administrator. The special conditions may be changed in light of the comments received. All comments received will be available in the Rules Docket for examination by interested persons, both before and after the closing date for comments. A report summarizing each substantive public contact with FAA personnel concerning this rulemaking will be filed in the docket. Commenters wishing the FAA to acknowledge receipt of their comments submitted in response to this notice must include a self-addressed, stamped postcard on which the following statement is made: ''Comments to Docket No. CE244.'' The postcard will be date stamped and returned to the commenter.

Background

In early 2006, the Avidyne Corporation, 55 Old Bedford Road, Lincoln, MA 01773, made an application to the FAA for a new Supplemental Type Certificate for airplane models listed under the type certification basis. The models are currently approved under the type certification basis listed in the paragraph headed ''Type Certification Basis.'' The proposed modification incorporates a novel or unusual design feature, such as a digital avionics system, that may be vulnerable to HIRF external to the airplane.

Type Certification Basis

Under the provisions of 14 CFR part 21, § 21.101, Avidyne Corporation, must show that affected airplane models, as changed, continue to meet the applicable provisions, of the regulations incorporated by reference in Type Certificate Numbers listed below or the applicable regulations in effect on the date of application for the change. The regulations incorporated by reference in the type certificate are commonly referred to as the original ''type certification basis'' and can be found in the Type Certificate Numbers listed below. In addition, the type certification basis of airplane models that embody this modification will include §§ 23.1301, 23.1309, 23.1311, and 23.1321, 23.1322 of Amendment 23–49; exemptions, if any; and the terms of this special condition adopted by this rulemaking action.

FINAL SPECIAL CONDITIONS

[Approved model list—Part 23 Class I & II (AC 23.1309–1C]

Aircraft make	Aircraft model(s)	Type certificate No.	Certification basis (see note 1)
Aerostar Aircraft Corporation	PA–60–600 (Aerostar 600), PA–60–601 (Aerostar 601), PA–60–601P (Aerostar 601P), PA–60–602P (Aerostar 602P).	A17WE	14 CFR Part 23.
Cessna Aircraft Company	172R, 172S	3A12	
	182S, 182T, T182T	3A1314 CFR Part 23.	14 CFR Part 23.
	206H, T206H	A4CE	14 CFR Part 23.
	T303	A34CE	14 CFR Part 23.
	310, 310A (USAF U–3A), 310B, 310C, 310D, 310E (USAF U–3B), 310F, 310G, 310H, 310I, 310J, 310J–1, 310K, 310L, 310N, 310P, E310H, E310J, T310P, 310Q, T310Q, 310R, T310R.	3A10	CAR 3.
	320, 320–1, 320A, 320B, 320C, 320D, 320E, 320F 340, 340A, 335, 340, 340A.	3A25	CAR 3.
	336	A2CE	CAR 3.
	337, 337A (USAF O2B), 337B, 337C, 337D, 337E, 337F, 337G, 337H, M337B (USAF O2A), P337H, T337B, T337C, T337D, T337E, T337F, T337G, T337H, T337H–SP.	A6CE	CAR 3, 14 CFR Part 23.
Cirrus Design Corporation	SR20, SR22	A00009CH	14 CFR Part 23.
Columbia Aircraft Manufacturing.	LC40–550FG, LC42–550FG	A00003SE	14 CFR Part 23.

FINAL SPECIAL CONDITIONS—Continued

[Approved model list—Part 23 Class I & II (AC 23.1309–1C]

Aircraft make	Aircraft model(s)	Type certificate No.	Certification basis (see note 1)
Commander Aircraft	112, 114, 112TC, 112B, 112TCA, 114A, 114B, 114TC	A12SO	CAR 3.
de Havilland Inc	DHC–2 Mk. I, DHC–2 Mk. II, DHC–2 Mk. III	A–806	CAR 3.
Diamond Aircraft Industries	DA 20–A1, DA20–C1	TA4CH	14 CFR Part 23.
	A40	A47CE	14 CFR Part 21, 14 CFR Part 23.
	A42	A57CE	14 CFR Part 21, 14 CFR Part 23.
Maule Aerospace Technology, Inc.	Bee Dee M–4, M–5–180C, MXT–7–160, M–4, M–5–200, MX–7–180A, M–4C, M–5–210C, MXT–7–180, M–4S, M–5–210TC, MX–7–180B, M–4T, M–5–220C, MXT–7–420, M–4–180C, M–5–235C, M–7–235B, M–4–180S, M–6–180, M–7–235A, M–4–180T, M–6–235, M–7–235C M–4–210 M–7–235 MX–7–180C, M–4–210C, MX–7–235, M–7–260, M–4–210S MX–7–180 MT–7–260, M–4–210T, MX–7–420, M–7–260C,M–4–220, MXT–7–180, M–7–420AC, M–4–220C, MT–7–235, MX–7–160C, M–4–220S, M–8–235, MX–7–180AC, M–4–220T, MX–7–160.	3A23	CAR 3.
Mooney Aircraft Corp	M20, M20A, M20B, M20C, M20D, M20E, M20F, M20G, M20J, M20K, M20L, M20M, M20R, M20S.	2A3	CAR 3.
	M22	A6SW	CAR 3.
Partenavia Costruzioni Aeronauticas S.p.A.	P 68, P 68B, P 68C, P 68C–TC, P 68 "OBSERVER", AP68 TP series 300, P68TC "OBSERVER", AP68TP 600, P68 "OBSERVER 2".	A31EU	14 CFR Part 23.
The New Piper Aircraft, Inc	PA–28–160, PA–28–150, PA–28–180, PA–28S–160, PA–28S–180, PA–28–235, PA–28–140 2 PCLM, PA–28–140 4 PCLM, PA–28R–180, PA–28R–200, PA–28R–200, PA–28–180, PA–28–235, PA–28–151, PA–28–181, PA–28–181, PA–28–161, PA–28–161, PA–28–161, PA–28R–201, PA–28R–201T, PA–28–236, PA–28RT–201, PA–28RT–201, PA–28RT–201T, PA–28–201T.		
	A–32–260, PA–32–300, PA–32S–300, PA–32R–300, PA–32RT–300, PA–32RT–300T, PA–32R–301, PA–32R–301, PA–32R–301T, PA–32–301, PA–32–301T, PA–32R–301T.	A3SO	CAR 3.
	PA–30, PA–39, PA–40	A1EA	CAR 3.
	PA–34–200, PA–34–200T, PA–34–220T, PA–34–220T, PA–34–220T.	A7SO	CAR 3.
	PA–44–180, PA–44–180, PA–44–180T	A19SO	14 CFR Part 23.
	PA–46–310P, PA–46–350P, PA–46–500TP	A25SO	14 CFR Part 23.
Raytheon Aircraft Company	A36, B36TC, G36	3A15	CAR 3.
	58 and 58A	3A16	CAR 3.
	58P and 58PA, 58TC and 58TCA	A23CE	14 CFR Part 23.
REVO, Incorporated	Lake LA–4, LA–4A, LA–4P, Lake LA–4–200, Lake 250	1A13	CAR 3, 14 CFR Part 23.
SOCATA—Groupe AEROSPATIALE.	TB 20, TB 10, TB 21, TB9, TB 200	A51EU	14 CFR Part 23.
Twin Commander	500, 520, 560, 560–A	6A1	CAR 3.

FINAL SPECIAL CONDITIONS

[Approved model list—Part 23 class III]

Aircraft make	Aircraft model(s)	Type certificate No.	Certification basis (see note 1)
Aerostar Aircraft Corporation	PA–60–700P (Aerostar 700P)	A17WE	14 CFR Part 23.
Cessna Aircraft Company	208, 208A, 208B	A37CE	14 CFR Part 23.
	401, 401A, 401B, 402, 402A, 402B, 402C, 411, 411A, 414, 414A, 421, 421A, 421B, 421C, 425.	A7CE	CAR 3.
	404, 406	A25CE	14 CFR Part 23.
	441	A28CE	14 CFR Part 23.
de Havilland Inc	(Twin Otter) DHC–6–1, DHC–6–100, DHC–6–200, DHC–6–300.	A9EA	CAR 3.
Fairchild	SA26–T, SA26–AT, SA226–T, SA226–AT, SA226–T(B), SA227–AT, SA227–TT.	A5SW	CAR 3.
Mitsubishi Heavy Industries, Ltd.	MU–2B, MU–2B–10, MU–2B–20, MU–2B–15, MU–2B–30, MU–2B–35, MU–2B–25, MU–2B–36, MU–2B–26.	A2PC	CAR 3.

FINAL SPECIAL CONDITIONS—Continued

[Approved model list—Part 23 class III]

Aircraft make	Aircraft model(s)	Type certificate No.	Certification basis (see note 1)
	MU–2B–25, MU–2B–35, MU–2B–26, MU–2B–36, MU–2B–26A, MU–2B–36A, MU–2B–40, MU–2B–60.	A10SW	CAR 3.
Partenavia Costruzioni Aeronauticas S.p.A.	"SPARTACUS", AP68TP 600 "VIATOR", VA300	A31EU	14 CFR Part 23.
Piaggio Aero Industries S.p.A	P–180	A59EU	14 CFR Part 23.
Pilatus Aircraft Limited	PC–12, PC–12/45	A78EU	14 CFR Part 23.
	PC–6, PC–6–H1, PC–6–H2, PC–6/350, PC–6/350–H1, PC–6/350–H2, PC–6/A, PC–6/A–H1, PC–6/A–H2, PC–6/B–H2, PC–6/B1–H2, PC–6/B2–H2, PC–6/B2–H4, PC–6/C–H2, PC–6/C1–H2.	7A15	CAR 3.
The New Piper Aircraft, Inc	PA–31, PA–31–300, PA–31–325, PA–31–350	A20SO	CAR 3.
	PA–31P, PA–31T, PA–31T1, PA–31T2, PA–31T3, PA–31P–350.	A8EA	CAR 3.
	PA–42, PA–42–720, PA–42–720R, PA–42–1000	A23SO	14 CFR Part 23.
Raytheon Aircraft Company	A100 (U–21F), A100A, A100C, B100	A14CE	14 CFR Part 23.
	F90	A31CE	14 CFR Part 23.
	E50 (L–23D, RL–23D), C50, F50, D50 (L–23E), G50, D50A H50, D50B, J50, D50C, D50E, D50E–5990.	5A4	CAR 3.
	60, A60, B60	A12CE	14 CFR Part 23.
	65, 65–A90–1, A65, 65–A90–2, A65–8200, 65–A90–3, 65–80, 65–A90–4, 65–A80, 65–A80–8800, 65–B80, 65–88, 65–90, 65–A90, 70, B90, C90, C90A, E90, H90.	3A20	CAR3, 14 CFR Part 23.
SOCATA—Groupe AEROSPATIALE.	TBM 700	A60EU	14 CFR Part 23.
Twin Commander	560–F, 681, 680, 690, 680E, 685, 680F, 690A, 720, 690B, 680FL, 690C, 680FL(P), 690D, 680T, 695, 680V, 695A, 680W, 695B.	2A4	CAR 3.
	500–A, 500–B, 500–U, 560–E, 500–S	6A1	CAR 3.
	700	A12SW	14 CFR Part 23.

Note 1: The Certification Basis listing refers to the Certification Basis listed on the Type Certificate Data Sheet for each model. The modified aircraft will be compliant with the latest amendment of the regulations applicable to the modification. In particular, the revised Certification Basis will incorporate §§ 23.1301, 23.1309, 23.1311, 23.1321, 23.1322, 23.1353 at amendment 49, and the terms of this Special Condition. Also, each model will be added to the Approved Model List (AML) using a prototyping approach, where the model is only added to the Supplemental Type Certificate as installations are accomplished and evaluated on each model. This combined special condition is being issued simply to avoid having to re-issue a repeated Special Condition document for each model listed on this multi-model approval.

Discussion

If the Administrator finds that the applicable airworthiness standards do not contain adequate or appropriate safety standards because of novel or unusual design features of an airplane, special conditions are prescribed under the provisions of § 21.16.

Special conditions, as appropriate, as defined in § 11.19, are issued in accordance with § 11.38 after public notice and become part of the type certification basis in accordance with § 21.101 (b)(2) of Amendment 21–69.

Special conditions are initially applicable to the model for which they are issued. Should the applicant apply for a supplemental type certificate to modify any other model already included on the same type certificate to incorporate the same novel or unusual design feature, the special conditions would also apply to the other model under the provisions of Sec. 21.101.

Novel or Unusual Design Features

Avidyne Corporation plans to incorporate certain novel and unusual design features into an airplane for which the airworthiness standards do not contain adequate or appropriate safety standards for protection from the effects of HIRF. These features include Electronic Flight Instrument Systems (EFIS), which are susceptible to the HIRF environment, that were not envisaged by the existing regulations for this type of airplane.

Protection of Systems from High Intensity Radiated Fields (HIRF)

Recent advances in technology have given rise to the application in aircraft designs of advanced electrical and electronic systems that perform functions required for continued safe flight and landing. Due to the use of sensitive solid-state advanced components in analog and digital electronics circuits, these advanced systems are readily responsive to the transient effects of induced electrical current and voltage caused by the HIRF. The HIRF can degrade electronic systems performance by damaging components or upsetting system functions.

Furthermore, the HIRF environment has undergone a transformation that was not foreseen when the current requirements were developed. Higher energy levels are radiated from transmitters that are used for radar, radio, and television. Also, the number of transmitters has increased significantly. There is also uncertainty concerning the effectiveness of airframe shielding for HIRF. Furthermore, coupling to cockpit-installed equipment through the cockpit window apertures is undefined.

The combined effect of the technological advances in airplane design and the changing environment has resulted in an increased level of vulnerability of electrical and electronic systems required for the continued safe flight and landing of the airplane. Effective measures against the effects of exposure to HIRF must be provided by the design and installation of these systems. The accepted maximum energy

levels in which civilian airplane system installations must be capable of operating safely are based on surveys and analysis of existing radio frequency emitters. These special conditions require that the airplane be evaluated under these energy levels for the protection of the electronic system and its associated wiring harness. These external threat levels, which are lower than previous required values, are believed to represent the worst case to which an airplane would be exposed in the operating environment.

These special conditions require qualification of systems that perform critical functions, as installed in aircraft, to the defined HIRF environment in paragraph 1 or, as an option to a fixed value using laboratory tests, in paragraph 2, as follows:

(1) The applicant may demonstrate that the operation and operational capability of the installed electrical and electronic systems that perform critical functions are not adversely affected when the aircraft is exposed to the HIRF environment defined below:

Frequency	Field strength (volts per meter)	
	Peak	Average
10 kHz–100 kHz	50	50
100 kHz–500 kHz	50	50
500 kHz–2 MHz	50	50
2 MHz–30 MHz	100	100
30 MHz–70 MHz	50	50
70 MHz–100 MHz	50	50
100 MHz–200 MHz	100	100
200 MHz–400 MHz	100	100
400 MHz–700 MHz	700	50
700 MHz–1 GHz	700	100
1 GHz–2 GHz	2000	200
2 GHz–4 GHz	3000	200
4 GHz–6 GHz	3000	200
6 GHz–8 GHz	1000	200
8 GHz–12 GHz	3000	300
12 GHz–18 GHz	2000	200
18 GHz–40 GHz	600	200

The field strengths are expressed in terms of peak root-mean-square (rms) values.

or,

(2) The applicant may demonstrate by a system test and analysis that the electrical and electronic systems that perform critical functions can withstand a minimum threat of 100 volts per meter, electrical field strength, from 10 kHz to 18 GHz. When using this test to show compliance with the HIRF requirements, no credit is given for signal attenuation due to installation.

A preliminary hazard analysis must be performed by the applicant, for approval by the FAA, to identify either electrical or electronic systems that perform critical functions. The term ''critical'' refers to functions, whose failure would contribute to, or cause, a failure condition that would prevent the continued safe flight and landing of the airplane. The systems identified by the hazard analysis that perform critical functions are candidates for the application of HIRF requirements. A system may perform both critical and non-critical functions. Primary electronic flight display systems, and their associated components, perform critical functions such as attitude, altitude, and airspeed indication. The HIRF requirements apply only to critical functions.

Compliance with HIRF requirements may be demonstrated by tests, analysis, models, similarity with existing systems, or any combination of these. Service experience alone is not acceptable since normal flight operations may not include an exposure to the HIRF environment. Reliance on a system with similar design features for redundancy as a means of protection against the effects of external HIRF is generally insufficient since all elements of a redundant system are likely to be exposed to the fields concurrently.

Applicability

As discussed above, these special conditions are applicable to one modification to the airplane models listed under the heading ''Type Certification Basis.'' Should Avidyne Corporation, apply to extend this modification to include additional airplane models, the special conditions would extend to these models as well under the provisions of § 21.101.

Conclusion

This action affects only certain novel or unusual design features of one modification to several models of airplanes. It is not a rule of general applicability and affects only the applicant who applied to the FAA for approval of these features on the airplane.

The substance of these special conditions has been subjected to the notice and comment period in several prior instances and has been derived without substantive change from those previously issued. It is unlikely that prior public comment would result in a significant change from the substance contained herein. For this reason, and because a delay would significantly affect the certification of some airplane models, the FAA has determined that prior public notice and comment are unnecessary and impracticable, and good cause exists for adopting these special conditions upon issuance. The FAA is requesting comments to allow interested persons to submit views that may not have been submitted in response to the prior opportunities for comment described above.

List of Subjects in 14 CFR Part 23

Aircraft, Aviation safety, Signs and symbols.

Citation

■ The authority citation for these special conditions is as follows:

Authority: 49 U.S.C. 106(g), 40113 and 44701; 14 CFR 21.16 and 21.101; and 14 CFR 11.38 and 11.19.

The Special Conditions

■ Accordingly, pursuant to the authority delegated to me by the Administrator, the following special conditions are issued as part of the type certification basis for airplane models listed under the ''Type Certification Basis'' heading modified by Avidyne Corporation, to add an EFIS.

1. Protection of Electrical and Electronic Systems from High Intensity Radiated Fields (HIRF). Each system that performs critical functions must be designed and installed to ensure that the operations, and operational capabilities of these systems to perform critical functions, are not adversely affected when the airplane is exposed to high intensity radiated electromagnetic fields external to the airplane.

2. For the purpose of these special conditions, the following definition applies: *Critical Functions:* Functions whose failure would contribute to, or cause, a failure condition that would prevent the continued safe flight and landing of the airplane.

Issued in Kansas City, Missouri on July 14, 2006.

Patrick R. Mullen,

Acting Manager, Small Airplane Directorate, Aircraft Certification Service.

[FR Doc. E6–11562 Filed 7–19–06; 8:45 am]

BILLING CODE 4910–13–P

DEPARTMENT OF TRANSPORTATION

Federal Aviation Administration

14 CFR Part 39

[Docket No. FAA–2006–23690; Directorate Identifier 2004–NM–133–AD; Amendment 39–14684; AD 2006–15–04]

RIN 2120–AA64

Airworthiness Directives; Airbus Model A300 B2 and B4 Series Airplanes; and Model A300 B4–600, B4–600R, and F4–600R Series Airplanes, and Model C4–605R Variant F Airplanes (Collectively Called A300–600 Series Airplanes)

AGENCY: Federal Aviation Administration (FAA), Department of Transportation (DOT).

ACTION: Final rule.

SUMMARY: The FAA is superseding two existing airworthiness directives (AD) that apply to certain Airbus Model A300 B2, A300 B4, and A300–600 series airplanes. One AD currently requires an inspection for cracks of the lower outboard flange of gantry No. 4 in the main landing gear (MLG) bay area, and repair if necessary. The other AD currently requires, among other actions, repetitive inspections of the gantry lower flanges, and repair if necessary. This new AD requires new repetitive inspections for cracks in the lower flange of certain gantries, and repair if necessary, which ends the existing inspection requirements. This new AD also provides for optional terminating actions for the new repetitive inspections. This AD results from a report of a large fatigue crack along the outboard flange of beam No. 4 and a subsequent determination that existing inspections are inadequate. We are issuing this AD to detect and correct fatigue cracks in the lower flanges of gantries 1 through 5 inclusive in the MLG bay area, which could result in reduced structural integrity of the fuselage, and consequent rapid decompression of the airplane.

DATES: This AD becomes effective August 24, 2006.

The Director of the Federal Register approved the incorporation by reference of Airbus Service Bulletin A300–53–0379, Revision 01, excluding Appendix 01, dated October 4, 2005; and Airbus Service Bulletin A300–53–6152, Revision 01, excluding Appendix 01, dated October 4, 2005; listed in the AD as of August 24, 2006.

On October 19, 2004 (69 FR 55329, September 14, 2004), the Director of the Federal Register approved the incorporation by reference of Airbus Service Bulletin A300–53–6128, excluding Appendix 01, dated March 5, 2001.

On January 22, 2004 (69 FR 867, January 7, 2004), the Director of the Federal Register approved the incorporation by reference of Airbus All Operators Telex A300–53A0371, Revision 01, dated September 10, 2003; and Airbus All Operators Telex A300–53A6145, Revision 01, dated September 10, 2003.

On July 30, 1998 (63 FR 34589, June 25, 1998), the Director of the Federal Register approved the incorporation by reference of Airbus All Operators Telex (AOT) 53–11, dated October 13, 1997.

ADDRESSES: You may examine the AD docket on the Internet at *http://dms.dot.gov* or in person at the Docket Management Facility, U.S. Department of Transportation, 400 Seventh Street SW., Nassif Building, Room PL–401, Washington, DC.

Contact Airbus, 1 Rond Point Maurice Bellonte, 31707 Blagnac Cedex, France, for service information identified in this AD.

FOR FURTHER INFORMATION CONTACT: Thomas Stafford, Aerospace Engineer, International Branch, ANM–116, FAA, Transport Airplane Directorate, 1601 Lind Avenue, SW., Renton, Washington 98055–4056; telephone (425) 227–1622; fax (425) 227–1149.

SUPPLEMENTARY INFORMATION:

Examining the Docket

You may examine the airworthiness directive (AD) docket on the Internet at *http://dms.dot.gov* or in person at the Docket Management Facility office between 9 a.m. and 5 p.m., Monday through Friday, except Federal holidays. The Docket Management Facility office (telephone (800) 647–5227) is located on the plaza level of the Nassif Building at the street address stated in the **ADDRESSES** section.

Discussion

The FAA issued a supplemental notice of proposed rulemaking (NPRM) to amend 14 CFR part 39 to include an AD that supersedes AD 2003–26–10, amendment 39–13408 (69 FR 867, January 7, 2004), and AD 2004–18–13, amendment 39–13792 (69 FR 55329, dated September 14, 2004). The existing ADs apply to certain Airbus Model A300 B2 and A300 B4 series airplanes, and Model A300 B4–600, B4–600R, and F4–600R series airplanes, and Model C4–605R Variant F airplanes (collectively called A300–600 series airplanes). That supplemental NPRM was published in the **Federal Register** on May 17, 2006 (71 FR 28615). That supplemental NPRM proposed to continue to require an inspection for cracks of the lower outboard flange of gantry No. 4 in the main landing gear (MLG) bay area, and repair if necessary. That supplemental NPRM also proposed to continue to require repetitive inspections of the gantry lower flanges, and repair if necessary. In addition, that supplemental NPRM proposed to require new repetitive inspections for cracks in the lower flange of certain gantries, and repair if necessary, which ends the existing inspection requirements. That supplemental NPRM also proposed optional terminating actions for the new repetitive inspections. That supplemental also revised the original NPRM by including additional airplanes that were excluded from the applicability.

Comments

We provided the public the opportunity to participate in the development of this AD. We have considered the comment that has been received on the supplemental NPRM.

Request To Refer to Latest Service Bulletin

Airbus states that it has issued Service Bulletins A300–53–0360, Revision 01, dated May 31, 2006; and A300–53–6132, Revision 01, dated June 7, 2006; whose original issues are listed in paragraph (m)(2) of the supplemental NPRM.

We infer that Airbus is requesting that Revision 01 of Service Bulletins A300–53–0360 and A300–53–6132 be referred to in paragraph (m)(2) of the AD. We agree. We have reviewed Revision 01 of both service bulletins. Revision 01 of both service bulletins revises three illustrations. The reinforcement procedures in Revision 01 of both service bulletins are identical to that in the original issues of the service bulletins. No additional work is required for airplanes modified in accordance with the original issues of the service bulletins. Therefore, we have revised paragraph (m)(2) of this AD to refer to Revision 01 of both service bulletins and added a new paragraph (p) to the AD (subsequent paragraphs have been redesignated) to give credit for accomplishing the original issues of both service bulletins.

Explanation of Change Made to the Supplemental NPRM

Paragraphs (g), (i)(4), and (n) of the supplemental NPRM specify making repairs using a method approved by either the FAA or the Direction Générale de l'Aviation Civile (DGAC) (or its delegated agent). The European

Aviation Safety Agency (EASA) has assumed responsibility for the airplane modes that would be subject to this AD. Therefore, we have revised those paragraphs of this AD to specify making repairs using a method approved by either the FAA, the DGAC (or its delegated agent), or the EASA (or its delegated agent).

Conclusion

We have carefully reviewed the available data, including the comment that has been received, and determined that air safety and the public interest require adopting the AD with the changes described previously. We have determined that these changes will neither increase the economic burden on any operator nor increase the scope of the AD.

Costs of Compliance

This AD will affect about 165 airplanes of U.S. registry. The following table provides the estimated costs for U.S. operators to comply with this AD. Not all actions must be completed on all airplanes.

ESTIMATED COSTS FOR REQUIRED ACTIONS

Action	Work hours	Average labor rate per hour	Parts	Cost per airplane	Number of U.S.-registered airplanes	Fleet cost
One-time inspection (required by AD 2003–26–10).	1	$80	None	$80	23	$1,840.
One-time inspection (required by AD 2004–18–13).	4	80	None	$320	43	$13,760.
Repetitive inspections (required by AD 2004–18–13).	12	80	None	$960, per inspection cycle.	78	$74,880, per inspection cycle.
Repetitive inspections (new proposed actions).	16	80	None	$1,280, per inspection cycle.	78	$99,840, per inspection cycle.

ESTIMATED COSTS FOR OPTIONAL ACTIONS

Optional action	Work hours	Average labor rate per hour	Parts	Cost per airplane	Number of U.S.-registered airplanes
Reinforcement specified in Airbus Service Bulletin A300–53–0380, dated August 5, 2005.	807	$80	Between $87,100 and $121,560 depending on kit purchased.	Between $151,660 and $186,120 depending on airplane configuration.	23
Reinforcement specified in Airbus Service Bulletin A300–53–6153, dated August 24, 2005.	807	80	Between $82,460 and $87,070 depending on kit purchased.	Between $147,020 and $151,630 depending on airplane configuration.	120
Reinforcement specified in Airbus Service Bulletin A300–53–0360, Revision 01, dated May 31, 2002.	Between 24 and 128 depending on airplane configuration.	80	Between $250 and $1,000 depending on kit purchased.	Between $2,170 and $11,240 depending on airplane configuration.	23
Reinforcement specified in Airbus Service Bulletin A300–53–6132, Revision 01, dated June 7, 2006.	109	80	Between $260 and $950 depending on kit purchased.	Between $8,980 and $9,670 depending on airplane configuration.	120

Authority for This Rulemaking

Title 49 of the United States Code specifies the FAA's authority to issue rules on aviation safety. Subtitle I, section 106, describes the authority of the FAA Administrator. Subtitle VII, Aviation Programs, describes in more detail the scope of the Agency's authority.

We are issuing this rulemaking under the authority described in subtitle VII, part A, subpart III, section 44701, ''General requirements.'' Under that section, Congress charges the FAA with promoting safe flight of civil aircraft in air commerce by prescribing regulations for practices, methods, and procedures the Administrator finds necessary for safety in air commerce. This regulation is within the scope of that authority because it addresses an unsafe condition that is likely to exist or develop on products identified in this rulemaking action.

Regulatory Findings

We have determined that this AD will not have federalism implications under Executive Order 13132. This AD will not have a substantial direct effect on the States, on the relationship between the national government and the States, or on the distribution of power and responsibilities among the various levels of government.

For the reasons discussed above, I certify that this AD:

(1) Is not a ''significant regulatory action'' under Executive Order 12866;

(2) Is not a ''significant rule'' under DOT Regulatory Policies and Procedures (44 FR 11034, February 26, 1979); and

(3) Will not have a significant economic impact, positive or negative, on a substantial number of small entities

under the criteria of the Regulatory Flexibility Act.

We prepared a regulatory evaluation of the estimated costs to comply with this AD and placed it in the AD docket. See the **ADDRESSES** section for a location to examine the regulatory evaluation.

List of Subjects in 14 CFR Part 39

Air transportation, Aircraft, Aviation safety, Incorporation by reference, Safety.

Adoption of the Amendment

■ Accordingly, under the authority delegated to me by the Administrator, the FAA amends 14 CFR part 39 as follows:

PART 39—AIRWORTHINESS DIRECTIVES

■ 1. The authority citation for part 39 continues to read as follows:

Authority: 49 U.S.C. 106(g), 40113, 44701.

§ 39.13 [Amended]

■ 2. The Federal Aviation Administration (FAA) amends § 39.13 by removing amendments 39–13408 (69 FR 867, January 7, 2004) and 39–13792 (69 FR 55329, September 14, 2004, and by adding the following new airworthiness directive (AD):

2006–15–04 Airbus: Amendment 39–14684. Docket No. FAA–2006–23690; Directorate Identifier 2004–NM–133–AD.

Effective Date

(a) This AD becomes effective August 24, 2006.

(b) This AD supersedes ADs 2003–26–10 and 2004–18–13.

Applicability

(c) This AD applies to Airbus airplanes identified in Table 1 of this AD, certificated in any category.

TABLE 1.—APPLICABILITY

Affected Airbus Airplanes
(1) All Model A300 B2–1A, B2–1C, B2K–3C, and B2–203 airplanes.
(2) All Model A300 B4–2C, B4–103, and B4–203 airplanes.
(3) All Model A300 B4–601, B4–603, B4–620, and B4–622 airplanes.
(4) All Model A300 B4–605R and B4–622R airplanes.
(5) All Model A300 F4–605R and F4–622R airplanes.
(6) All Model A300 C4–605R Variant F airplanes.

Unsafe Condition

(d) This AD results from a report of a large fatigue crack along the outboard flange of beam No. 4. We are issuing this AD to detect and correct fatigue cracks in the lower flanges of the left and right gantries 1 through 5 inclusive in the main landing gear (MLG) bay area, which could result in reduced structural integrity of the fuselage, and consequent rapid decompression of the airplane.

Compliance

(e) You are responsible for having the actions required by this AD performed within the compliance times specified, unless the actions have already been done.

Restatement of Requirements of AD 2003–26–10

One-Time Inspection

(f) For airplanes on which Airbus Modification 10147 has not been done: At the later of the times specified in paragraphs (f)(1) and (f)(2) of this AD: Do a one-time detailed inspection for cracking of the lower outboard flange of gantry No. 4 in the MLG bay area per paragraph 4.2.1 of Airbus All Operators Telex (AOT) A300–53A0371, Revision 01 (for Model A300 B2 and B4 series airplanes); or AOT A300–53A6145, Revision 01 (for Model A300–600 series airplanes); both dated September 10, 2003; as applicable.

(1) Before the accumulation of 8,000 total flight cycles since the date of issuance of the original Airworthiness Certificate or the date of issuance of the Export Certificate of Airworthiness, whichever is first.

(2) Within 30 days after January 22, 2004 (the effective date AD 2003–26–10).

Note 1: For the purposes of this AD, a detailed inspection is defined as: ''An intensive visual examination of a specific structural area, system, installation, or assembly to detect damage, failure, or irregularity. Available lighting is normally supplemented with a direct source of good lighting at intensity deemed appropriate by the inspector. Inspection aids such as mirror, magnifying lenses, etc., may be used. Surface cleaning and elaborate access procedures may be required.''

Repair

(g) Repair any cracking found during the inspection required by paragraph (f) of this AD before further flight, per a method approved by either the Manager, International Branch, ANM–116, Transport Airplane Directorate, FAA; the Direction Générale de l'Aviation Civile (DGAC) (or its delegated agent); or the European Aviation Safety Agency (EASA) (or its delegate agent).

Restatement of Requirements of AD 2004–18–13

One-Time Inspection and Corrective Action

(h) For Model A300 B2–1A, B2–1C, B2K–3C, and B2–203 airplanes, and Model A300 B4–2C, B4–103, and B4–203 airplanes, on which Airbus Modification 3474 has been done: Prior to the accumulation of 16,300 total flight cycles, or within 500 flight cycles after July 30, 1998 (the effective date of AD 98–13–37), whichever occurs later, perform a one-time ultrasonic inspection for cracking of the gantry lower flanges in the MLG bay area, in accordance with Airbus AOT 53–11, dated October 13, 1997.

(1) If any cracking is detected, prior to further flight, repair in accordance with the AOT.

(2) If no cracking is detected, no further action is required by this paragraph.

Repetitive Inspections and Corrective Actions

(i) For Model A300 B4–601, B4–603, B4–605R, B4–620, B4–622R, C4–605R Variant F airplanes, and F4–605R airplanes, on which Airbus Modification 12169 has not been done in production: Perform the requirements of paragraphs (i)(1), (i)(2), (i)(3), and (i)(4) of this AD, in accordance with Airbus Service Bulletin A300–53–6128, dated March 5, 2001.

(1) At the later of the times specified in paragraphs (i)(1)(i) and (i)(1)(ii) of this AD, perform initial ultrasonic inspections or high-frequency eddy current (HFEC) inspections for cracks of the lower flanges of gantries 3, 4, and 5 between fuselage frames FR47 and FR54, in accordance with the Accomplishment Instructions, including the Synoptic Chart contained in Figure 2, sheets 1 through 5 inclusive, of the service bulletin.

(i) In accordance with the thresholds specified in the Synoptic Chart contained in Figure 2, sheets 1 through 5 inclusive, of the service bulletin; or

(ii) Within 200 flight cycles after October 19, 2004 (the effective date AD 2004–18–13).

(2) Perform repetitive ultrasonic inspections or high-frequency eddy current inspections for cracks of the lower flanges of gantries 3, 4, and 5 between fuselage frames FR47 and FR54, in accordance with the thresholds and Accomplishment Instructions, including the Synoptic Chart contained in Figure 2, sheets 1 through 5 inclusive, of the service bulletin.

(3) Perform repairs and reinforcements, in accordance with the thresholds and the Accomplishment Instructions, including the Synoptic Chart contained in Figure 2, sheets 1 through 5 inclusive, of the service bulletin, except as specified in paragraph (i)(4) of this AD.

(4) If a new crack is found during any action required by paragraph (i)(1), (i)(2) or (i)(3) of this AD and the Synoptic Chart contained in Figure 2, sheets 1 through 5 inclusive, of the service bulletin specifies to contact Airbus for appropriate action: Prior to further flight, repair per a method approved by the Manager, International Branch, ANM–116; the DGAC (or its delegated agent); or the European Aviation Safety Agency (EASA) (or its delegate agent).

Credit for Inspections Accomplished in Accordance With AOT

(j) Any inspection accomplished before October 19, 2004, in accordance with Airbus AOT 53–11, dated October 13, 1997, is acceptable for compliance with the corresponding inspection specified in paragraph (i)(1) of this AD, for that inspection area only. Operators must do the applicable inspections in paragraph (i)(1) of this AD for the remaining inspection areas.

New Requirements of This AD

Repetitive Inspections

(k) At the later of the applicable times specified in the ''Threshold (FC)'' and ''Grace

Period'' columns of Tables 1 and 2 in paragraph 1.E of the applicable service bulletin in Table 2 of this AD: Do an ultrasonic inspection or HFEC inspection, including rework of the pressure diaphragm, for cracks in the lower flanges of the left and right gantries 1 through 5 inclusive between FR47 and FR54, in accordance with the Accomplishment Instructions of the applicable service bulletin in Table 2 of this AD. Repeat the inspection at the applicable times specified in the ''Interval (FC)'' column of Tables 1 and 2 in paragraph 1.E of the applicable service bulletin in Table 2 of this AD. Accomplishment of the initial inspection ends the inspections required by paragraphs (f), (h), and (i) of this AD.

TABLE 2.—SERVICE BULLETINS

Airbus Service Bulletin—	For airplanes identified in—
(1) A300–53–0379, Revision 01, dated October 4, 2005	Paragraphs (c)(1) and (c)(2) of this AD inclusive.
(2) A300–53–6152, Revision 01, dated October 4, 2005	Paragraphs (c)(3) through (c)(6) of this AD inclusive.

Corrective Action

(l) If any crack is detected during any ultrasonic or HFEC inspection required by paragraph (k) of this AD, before further flight, repair the crack in accordance with the Accomplishment Instructions of the applicable service bulletin in Table 2 of this AD, except as provided by paragraph (n) of this AD.

Optional Terminating Actions

(m) Accomplishment of the actions specified in Table 3 of this AD ends the repetitive inspections required by paragraph (k) of this AD.

TABLE 3.—OPTIONAL TERMIANTING ACTIONS

Before or at the same time with—	Reinforce—	By doing all the actions in accordance with the Accomplishment Instructions of—	For airplanes identified in—
(1) The actions required by paragraph (k) of this AD and the action specified in paragraph (m)(2) of this AD.	The flanges of the left and right portals 1 through 5 inclusive between FR47 and FR54 of the landing gear, including a rotating probe inspection for cracks of holes and repair if necessary.	Airbus Service Bulletin A300–53–0380, dated August 5, 2005, except as provided by paragraph (n) of this AD.	Paragraphs (c)(1) and (c)(2) of this AD inclusive.
		Airbus Service Bulletin A300–53–6153, dated August 24, 2005, except as provided by paragraph (n) of this AD.	Paragraphs (c)(3) through (c)(6) of this AD inclusive.
(2) The actions required by paragraph (k) of this AD.	Portals 3, 4, and 5 of the plates/skin.	Airbus Service Bulletin A300–53–0360, Revision 01, dated May 31, 2006, except as provided by paragraph (n) of this AD.	Paragraphs (c)(1) and (c)(2) of this AD inclusive.
		Airbus Service Bulletin A300–53–6132, Revision 01, dated June 7, 2006, except as provided by paragraph (n) of this AD.	Paragraphs (c)(3) through (c)(6) of this AD inclusive.

Repair of Certain Cracks

(n) Where the applicable service bulletin recommends contacting Airbus for appropriate action: Before further flight, repair the crack in accordance with a method approved by the Manager, International Branch, ANM–116; the DGAC (or its delegated agent); or the European Aviation Safety Agency (EASA) (or its delegate agent).

Credit for Original Service Bulletins

(o) Accomplishing the inspections and repair before the effective date of this AD in accordance with Airbus Service Bulletin A300–53–0379, dated May 9, 2005; or Airbus Service Bulletin A300–53–6152, dated May 9, 2005; as applicable; is acceptable for compliance with the corresponding requirements of paragraphs (k) and (l) of this AD.

(p) Accomplishing the reinforcement before the effective date of this AD in accordance with Airbus Service Bulletin A300–53–0360, dated May 3, 2002; and Airbus Service Bulletin A300–53–6132, dated February 5, 2002; is acceptable for compliance with the corresponding requirements of paragraph (m)(2) of this AD.

No Inspection Report

(q) Although the service bulletins in this AD specify to submit certain information to the manufacturer, this AD does not include that requirement.

Alternative Methods of Compliance (AMOCs)

(r)(1) The Manager, International Branch, ANM–116, has the authority to approve AMOCs for this AD, if requested in accordance with the procedures found in 14 CFR 39.19.

(2) Before using any AMOC approved in accordance with § 39.19 on any airplane to which the AMOC applies, notify the appropriate principal inspector in the FAA Flight Standards Certificate Holding District Office.

Related Information

(s) French airworthiness directive F–2005–091 R1, issued September 28, 2005, also addresses the subject of this AD.

Material Incorporated by Reference

(t) You must use the applicable service bulletins identified in Table 4 of this AD to perform the actions that are required by this AD, unless the AD specifies otherwise.

(1) The Director of the Federal Register approved the incorporation by reference of the documents in Table 5 of this AD in accordance with 5 U.S.C. 552(a) and 1 CFR part 51.

(2) On October 19, 2004 (69 FR 55329, September 14, 2004), the Director of the Federal Register approved the incorporation by reference of Airbus Service Bulletin A300–53–6128, excluding Appendix 01, dated March 5, 2001.

(3) On January 22, 2004 (69 FR 867, January 7, 2004), the Director of the Federal Register approved the incorporation by reference of Airbus All Operators Telex A300–53A0371, Revision 01, dated September 10, 2003; and Airbus All Operators Telex A300–53A6145, Revision 01, dated September 10, 2003.

(4) On July 30, 1998 (63 FR 34589, June 25, 1998), the Director of the Federal Register approved the incorporation by reference of

Airbus All Operators Telex (AOT) 53–11, dated October 13, 1997.

(5) Contact Airbus, 1 Rond Point Maurice Bellonte, 31707 Blagnac Cedex, France, for a copy of this service information. You may review copies at the Docket Management Facility, U.S. Department of Transportation, 400 Seventh Street, SW., Room PL–401, Nassif Building, Washington, DC; on the Internet at *http://dms.dot.gov;* or at the National Archives and Records Administration (NARA). For information on the availability of this material at the NARA, call (202) 741–6030, or go to *http://www.archives.gov/federal_register/code_of_federal_regulations/ibr_locations.html.*

TABLE 4.—ALL MATERIAL INCORPORATED BY REFERENCE

Service Bulletin	Revision level	Date
Airbus All Operators Telex A300–53A0371	01	September 10, 2003.
Airbus All Operators Telex A300–53A6145	01	September 10, 2003.
Airbus All Operators Telex (AOT) 53–11	Original	October 13, 1997.
Airbus Service Bulletin A300–53–0379, excluding Appendix 01	01	October 4, 2005.
Airbus Service Bulletin A300–53–6128, excluding Appendix 01	Original	March 5, 2001.
Airbus Service Bulletin A300–53–6152, excluding Appendix 01	01	October 4, 2005.

TABLE 5.—NEW MATERIAL INCORPORATED BY REFERENCE

Service Bulletin	Revision level	Date
Airbus Service Bulletin A300–53–0379, excluding Appendix 01	01	October 4, 2005.
Airbus Service Bulletin A300–53–6152, excluding Appendix 01	01	October 4, 2005.

Issued in Renton, Washington, on July 7, 2006.

Ali Bahrami,

Manager, Transport Airplane Directorate, Aircraft Certification Service.

[FR Doc. E6–11412 Filed 7–19–06; 8:45 am]

BILLING CODE 4910–13–P

DEPARTMENT OF TRANSPORTATION

Federal Aviation Administration

14 CFR Part 39

[Docket No. FAA–2005–20731; Directorate Identifier 2004–NM–260–AD; Amendment 39–14685; AD 2006–15–05]

RIN 2120–AA64

Airworthiness Directives; Boeing Model 737–200, –300, and –400 Series Airplanes

AGENCY: Federal Aviation Administration (FAA), Department of Transportation (DOT).

ACTION: Final rule.

SUMMARY: The FAA is adopting a new airworthiness directive (AD) for certain Boeing Model 737–200, –300, and –400 series airplanes. This AD requires replacing the existing fueling float switch in the auxiliary fuel tank with a new, improved fueling float switch, installing a new liner system inside the float switch conduit, and performing related investigative and other specified actions. This AD results from reports of chafing of the direct-current-powered float switch wiring insulation in the center fuel tank. We are issuing this AD to prevent contamination of the fueling float switch of the auxiliary fuel tank by moisture or fuel, and chafing of the float switch wiring against the float switch conduit in the fuel tank, which could present an ignition source inside the fuel tank that could cause a fire or explosion.

DATES: This AD becomes effective August 24, 2006.

The Director of the Federal Register approved the incorporation by reference of a certain publication listed in the AD as of August 24, 2006.

ADDRESSES: You may examine the AD docket on the Internet at *http://dms.dot.gov* or in person at the Docket Management Facility, U.S. Department of Transportation, 400 Seventh Street, SW., Nassif Building, room PL–401, Washington, DC.

Contact Boeing Commercial Airplanes, P.O. Box 3707, Seattle, Washington 98124–2207, for service information identified in this AD.

FOR FURTHER INFORMATION CONTACT: Sherry Vevea, Aerospace Engineer, Propulsion Branch, ANM–140S, FAA, Seattle Aircraft Certification Office, 1601 Lind Avenue, SW., Renton, Washington 98055–4056; telephone (425) 917–6514; fax (425) 917–6590.

SUPPLEMENTARY INFORMATION:

Examining the Docket

You may examine the airworthiness directive (AD) docket on the Internet at *http://dms.dot.gov* or in person at the Docket Management Facility office between 9 a.m. and 5 p.m., Monday through Friday, except Federal holidays. The Docket Management Facility office (telephone (800) 647–5227) is located on the plaza level of the Nassif Building at the street address stated in the **ADDRESSES** section.

Discussion

The FAA issued a notice of proposed rulemaking (NPRM) to amend 14 CFR part 39 to include an AD that would apply to certain Boeing Model 737–200, –300, and –400 series airplanes. That NPRM was published in the **Federal Register** on March 31, 2005 (70 FR 16445). That NPRM proposed to require replacing the existing fueling float switch in the auxiliary fuel tank with a new, improved fueling float switch, installing a new liner system inside the float switch conduit, and performing related investigative and other specified actions.

New Relevant Service Information

We have reviewed Boeing Service Bulletin 737–28A1192, Revision 2, dated April 27, 2006. (The NPRM refers to Boeing Service Bulletin 737–28A1192, Revision 1, dated August 21, 2003, as the appropriate source of service information for the proposed actions.) Revision 2 adds a new Part B, which describes procedures for adding environmental protection to the splice and conduit. We have revised paragraph (f) of this AD to refer to Revision 2 as the appropriate source of service information for the actions required by that paragraph. Also, we have revised paragraph (h) of this AD to give credit for actions previously accomplished in

accordance with Revision 1 of the service bulletin.

Comments

We provided the public the opportunity to participate in the development of this AD. We have considered the comments received.

Support for the Proposed AD

Two commenters, Boeing and the National Transportation Safety Board (NTSB), support the proposed AD.

Request to Correct Subject Part Number (P/N)

Continental Airlines (Continental) notes that the P/N specified in paragraph (g) of the proposed AD is different than the P/N specified in paragraph (j) of AD 2004–15–04, amendment 39–13738 (69 FR 44580, July 27, 2004). (The NPRM explains that AD 2004–15–04 requires actions on the fueling float switches in the center and wing fuel tanks which are similar to the actions proposed for the auxiliary fuel tanks.) Similarly, BMI submits a single page from Boeing Service Bulletin 737–28A1192, Revision 1, marked to indicate that the float switch P/N is F8300–146.

We infer that Continental and BMI are asking us to revise paragraph (g) of the proposed AD to correct the float switch P/N. We agree. We made a typographical error in the P/N in paragraph (g) of the NPRM. There is no float switch that has P/N 8300–146. We have revised paragraph (g) of this AD to correct the P/N to F8300–146.

Request To Address Defective Parts Manufacturing Authority (PMA) Parts

The Modification and Replacement Parts Association (MARPA) requests that we revise the proposed AD to cover possible defective PMA alternative parts, rather than just a single P/N, so that those defective PMA parts also are subject to the proposed AD. The MARPA also asks that we determine whether one known PMA part contains the same defect as the original equipment manufacturer's (OEM) part.

The MARPA notes that the proposed AD does not address the possibility that PMA parts may be installed in lieu of the part referenced in Boeing Service Bulletin 737–28A1192. The commenter indicates that Ametek Aerospace has received a PMA for a float switch having P/N F8300–146 which may be installed in lieu of the OEM part. The MARPA states that, by referring solely to the Boeing service bulletin, the proposed AD would not apply to this or any other PMA alternative, though the commenter assumes a PMA part would contain the same defect as the OEM part. The commenter states that this loophole could create a safety issue by allowing defective parts to remain in service.

We concur with the MARPA's general comment that, if we know that an unsafe condition also exists in PMA parts, the AD should address those parts, as well as the OEM parts.

However, we find that we may have caused confusion for the commenter with the typographical error addressed previously under ''Request to Correct Subject Part Number (P/N).'' The typographical error appears to have caused the commenter to think that there are two float switches of similar design—one produced by the OEM having P/N 8300–146, and the one produced by Ametek Aerospace having P/N F8300–146. This is not the case. We are aware of only one float switch of this design, and this is the float switch having P/N F8300–146 produced by Ametek Aerospace. Thus, the part to which the commenter refers is already subject to the requirements of this AD.

However, the commenter's remarks are timely in that the Transport Airplane Directorate currently is in the process of reviewing this issue as it applies to transport category airplanes. We acknowledge that there may be other ways of addressing this issue to ensure that unsafe PMA parts are identified and addressed. Once we have thoroughly examined all aspects of this issue, including input from industry, and have made a final determination, we will consider whether our policy regarding addressing PMA parts in ADs needs to be revised. We consider that to delay this AD action would be inappropriate, since we have determined that an unsafe condition exists and that replacement of certain parts must be accomplished to ensure continued safety.

We have not changed the final rule in this regard.

Request To Provide Information for Maintaining Configuration

Continental recommends installing identification sleeves on the wiring near the float switch connector at the auxiliary fuel tank. Continental states that such identification sleeves would assist operators in maintaining the configuration after the proposed actions have been done. The commenter notes that, while the proposed AD changes float switch wiring routing and conduit P/Ns, a maintenance person could unintentionally change this configuration at some point in the future. The commenter suggests that the sleeves be marked with a cautionary message that refers to the service bulletin number or other identifying number. The commenter states that similar identification sleeves are used for the wiring installation for the isolated fuel quantity transmitter on Model 737 airplanes.

We agree with the commenter's intent. But we do not agree that any change is necessary. The design of the float switch, conduit, liner, and wiring system will be listed as a critical design configuration control limitation (CDCCL) for the fuel system on Model 737 series airplanes. This will ensure that operators do not modify the fuel system without appropriate design review. Boeing states that it will also ensure that maintenance instructions will require that the conduit liner be replaced with a new liner whenever the wiring is removed from the float switch conduit for any reason.

Request To Revise Statement Regarding Parts

Continental requests that note (a) be removed from Section 2.C., ''Parts Necessary for Each Airplane,'' of the service bulletin. The commenter specifically objects to the instruction in note (a), ''Keep the existing part if there are other uses for it.''

We infer that the commenter is concerned that an existing float switch removed from the auxiliary fuel tank could be used again. We do not agree that any change is necessary. Note (b) of the same section states, ''You cannot use the existing part to replace the new or changed part.'' This addresses the concern that the part could be reinstalled in the affected area of an airplane subject to this AD. We have not changed the AD in this regard.

Request To Provide for Removed Fuel Tanks

The Air Transport Association (ATA), on behalf of its member Delta Airlines, states no objections to the proposed AD, but suggests adding a statement that no action is required for airplanes that are included in the applicability statement but that have had the auxiliary fuel tank removed.

We acknowledge the commenter's suggestion, but do not agree that any change is necessary. The applicability statement in paragraph (c) of this AD already states that this AD applies to ''Boeing Model 737–200, –300, and –400 series airplanes * * * equipped with auxiliary fuel tanks.''

Request To Revise Costs of Compliance

Continental states that doing the actions in the Accomplishment Instructions of the service bulletin took approximately 40 work hours (20 elapsed hours) per airplane, excluding

the time needed to gain access and close up.

We infer that Continental is asking that we revise the Costs of Compliance to reflect the work hours that it found were necessary. We do not agree. We recognize that the time necessary to do the actions required by an AD may vary somewhat from operator to operator. It is not possible for us to account for all of the potential variances. The estimate of 38 work hours specified in this AD is consistent with the estimate specified in the service bulletin. We find no change is needed in this regard.

Clarification of AD Requirements

As we noted previously, Revision 2 of the service bulletin adds a new Part B, which describes procedures for adding environmental protection to the splice and conduit. Revision 2 of the service bulletin recommends that the actions in Part B be accomplished but does not provide a compliance time for those actions. We find that the actions specified in Part B are not necessary to address the unsafe condition addressed by this AD. Thus, this AD requires accomplishing only Part A of the service bulletin. We have revised paragraph (f) of this AD accordingly. We also added Note 1 to this AD to clarify that this AD does not require the actions in Part B.

Clarification of AMOC Paragraph

We have revised this action to clarify the appropriate procedure for notifying the principal inspector before using any approved AMOC on any airplane to which the AMOC applies.

Conclusion

We have carefully reviewed the available data, including the comments received, and determined that air safety and the public interest require adopting the AD with the changes described previously. We have determined that these changes will neither increase the economic burden on any operator nor increase the scope of the AD.

Costs of Compliance

This AD will affect about 103 airplanes worldwide and 44 airplanes of U.S. registry. The required actions will take about 38 work hours per airplane, at an average labor rate of $65 per work hour. Required parts will cost about $1,634 per airplane. Based on these figures, the estimated cost of this AD for U.S. operators is $180,576, or $4,104 per airplane.

Authority for This Rulemaking

Title 49 of the United States Code specifies the FAA's authority to issue rules on aviation safety. Subtitle I, section 106, describes the authority of the FAA Administrator. Subtitle VII, Aviation Programs, describes in more detail the scope of the Agency's authority.

We are issuing this rulemaking under the authority described in subtitle VII, part A, subpart III, section 44701, ''General requirements.'' Under that section, Congress charges the FAA with promoting safe flight of civil aircraft in air commerce by prescribing regulations for practices, methods, and procedures the Administrator finds necessary for safety in air commerce. This regulation is within the scope of that authority because it addresses an unsafe condition that is likely to exist or develop on products identified in this rulemaking action.

Regulatory Findings

We have determined that this AD will not have federalism implications under Executive Order 13132. This AD will not have a substantial direct effect on the States, on the relationship between the national government and the States, or on the distribution of power and responsibilities among the various levels of government.

For the reasons discussed above, I certify that this AD:

(1) Is not a ''significant regulatory action'' under Executive Order 12866;

(2) Is not a ''significant rule'' under DOT Regulatory Policies and Procedures (44 FR 11034, February 26, 1979); and

(3) Will not have a significant economic impact, positive or negative, on a substantial number of small entities under the criteria of the Regulatory Flexibility Act.

We prepared a regulatory evaluation of the estimated costs to comply with this AD and placed it in the AD docket. See the **ADDRESSES** section for a location to examine the regulatory evaluation.

List of Subjects in 14 CFR Part 39

Air transportation, Aircraft, Aviation safety, Incorporation by reference, Safety.

Adoption of the Amendment

■ Accordingly, under the authority delegated to me by the Administrator, the FAA amends 14 CFR part 39 as follows:

PART 39—AIRWORTHINESS DIRECTIVES

■ 1. The authority citation for part 39 continues to read as follows:

Authority: 49 U.S.C. 106(g), 40113, 44701.

§ 39.13 [Amended]

■ 2. The Federal Aviation Administration (FAA) amends § 39.13 by adding the following new airworthiness directive (AD):

2006–15–05 Boeing: Amendment 39–14685. Docket No. FAA–2005–20731; Directorate Identifier 2004–NM–260–AD.

Effective Date

(a) This AD becomes effective August 24, 2006.

Affected ADs

(b) None.

Applicability

(c) This AD applies to Boeing Model 737–200, –300, and –400 series airplanes, certificated in any category, equipped with auxiliary fuel tanks.

Unsafe Condition

(d) This AD was prompted by reports of chafing of the direct-current-powered float switch wiring insulation in the center fuel tank. We are issuing this AD to prevent contamination of the fueling float switch of the auxiliary fuel tank by moisture or fuel, and chafing of the float switch wiring against the float switch conduit in the fuel tank, which could present an ignition source inside the fuel tank that could cause a fire or explosion.

Compliance

(e) You are responsible for having the actions required by this AD performed within the compliance times specified, unless the actions have already been done.

Replacement

(f) Within 24 months after the effective date of this AD: Replace the existing fueling float switch in the auxiliary fuel tank with a new, improved fueling float switch, install a new liner system inside the float switch conduit, and perform related investigative and other specified actions, by doing all of the actions in accordance with Part A of the Accomplishment Instructions of Boeing Service Bulletin 737–28A1192, Revision 2, dated April 27, 2006.

Note 1: This AD does not require doing the actions in Part B of the Accomplishment Instructions of Boeing Service Bulletin 737–28A1192, Revision 2, dated April 27, 2006.

Parts Installation

(g) As of the effective date of this AD, no person may install a fueling float switch having P/N F8300–146 on the auxiliary fuel tank of any airplane.

Actions Accomplished Previously

(h) Replacements and conduit liner system installations accomplished before the effective date of this AD in accordance with Boeing Alert Service Bulletin 737–28A1192, dated March 27, 2003; or Boeing Service Bulletin 737–28A1192, Revision 1, dated August 21, 2003; are acceptable for compliance with the requirements of this AD.

Alternative Methods of Compliance (AMOCs)

(i)(1) The Manager, Seattle Aircraft Certification Office, FAA, has the authority to approve AMOCs for this AD, if requested in accordance with the procedures found in 14 CFR 39.19.

(2) Before using any AMOC approved in accordance with 14 CFR 39.19 on any airplane to which the AMOC applies, notify the appropriate principal inspector in the FAA Flight Standards Certificate Holding District Office.

Material Incorporated by Reference

(j) You must use Boeing Service Bulletin 737–28A1192, Revision 2, dated April 27, 2006, to perform the actions that are required by this AD, unless the AD specifies otherwise. The Director of the Federal Register approved the incorporation by reference of this document in accordance with 5 U.S.C. 552(a) and 1 CFR part 51. Contact Boeing Commercial Airplanes, P.O. Box 3707, Seattle, Washington 98124–2207, for a copy of this service information. You may review copies at the Docket Management Facility, U.S. Department of Transportation, 400 Seventh Street, SW., room PL–401, Nassif Building, Washington, DC; on the Internet at *http://dms.dot.gov;* or at the National Archives and Records Administration (NARA). For information on the availability of this material at the NARA, call (202) 741–6030, or go to *http://www.archives.gov/federal_register/code_of_federal_regulations/ibr_locations.html.*

Issued in Renton, Washington, on July 7, 2006.

Ali Bahrami,

Manager, Transport Airplane Directorate, Aircraft Certification Service.

[FR Doc. E6–11418 Filed 7–19–06; 8:45 am]

BILLING CODE 4910–13–P

DEPARTMENT OF TRANSPORTATION

Federal Aviation Administration

14 CFR Part 39

[Docket No. FAA–2006–23645; Directorate Identifier 2006–CE–04–AD; Amendment 39–14687; AD 2006–15–07]

RIN 2120–AA64

Airworthiness Directives; Mitsubishi Heavy Industries, Ltd. MU–2B Series Airplanes

AGENCY: Federal Aviation Administration (FAA), Department of Transportation (DOT).

ACTION: Final rule.

SUMMARY: We are adopting a new airworthiness directive (AD) for certain Mitsubishi Heavy Industries, Ltd. (MHI) MU–2B series airplanes. This AD requires you to incorporate text from the service information into the Limitations Section of the FAA-approved Airplane Flight Manual (AFM). This AD results from a recent safety evaluation that used a data-driven approach to analyze the design, operation, and maintenance of the MU–2B series airplanes in order to determine their safety and define what steps, if any, are necessary for their safe operation. Part of that evaluation was the identification of unsafe conditions that exist or could develop on the affected type design airplanes. Field reports indicate an unsafe condition of improper rigging and/or adjustment of the propeller feathering linkage. Service centers found the unsafe condition during inspections. We are issuing this AD to detect and correct improper rigging of the propeller feathering linkage. The above issue, if uncorrected, could result in degraded performance and poor handling qualities with consequent loss of control of the airplane.

DATES: This AD becomes effective on August 24, 2006.

ADDRESSES: For service information related to this AD, contact Mitsubishi Heavy Industries America, Inc., 4951 Airport Parkway, Suite 800, Addison, Texas 75001; telephone: (972) 934–5480; facsimile: (972) 934–5488.

To view the AD docket, go to the Docket Management Facility, U.S. Department of Transportation, 400 Seventh Street, SW., Nassif Building, Room PL–401, Washington, DC 20590–001 or on the Internet at *http://dms.dot.gov.* The docket number is FAA–2006–23645; Directorate Identifier 2006–CE–04–AD.

FOR FURTHER INFORMATION CONTACT: Rao Edupuganti, Aerospace Engineer, ASW–150, Fort Worth Aircraft Certification Office, 2601 Meacham Blvd., Fort Worth, Texas 76193; telephone: (817) 222–5284; facsimile: (817) 222–5960.

SUPPLEMENTARY INFORMATION:

Discussion

On March 16, 2006, we issued a proposal to amend part 39 of the Federal Aviation Regulations (14 CFR part 39) to include an AD that would apply to certain MHI MU–2B series airplanes. This proposal was published in the **Federal Register** as a notice of proposed rulemaking (NPRM) on March 22, 2006 (71 FR 14425). The NPRM proposed to require you to incorporate text from the service information into the Limitations Section of the FAA-approved AFM.

Comments

We provided the public the opportunity to participate in developing this AD. The following presents the comment received on the proposal and FAA's response to that comment:

Comment Issue: Issuance of an AD Requiring a Procedure That Has Been in the AFM for Almost 10 Years

Ralph Sorrells, Mitsubishi Heavy Industries America (MHIA), Inc. contends that while MHIA does not object to the issuance of an AD to ensure that the feathering valve linkage inspection revision is included in the AFMs, MHIA does not understand why this condition would now merit an AD requiring the MU–2B operators to follow a procedure that has been in their AFMs for almost 10 years. This condition has not been the subject of a service difficulty report.

Field reports have indicated that some MU–2B aircraft being inspected by service centers require re-rigging and/or adjustment of the propeller feathering linkage. Typically, misadjustment of the feathering linkage could result in the inability of the linkage to pull the feather valve to function as designed. The inability to feather the propeller could result in asymmetric drag and control difficulties that are outside the operational envelope of the aircraft.

For type certificate data sheet (TCDS) A2PC, Service Bulletin No. 229, dated February 20, 1996, was issued by MHI, Ltd. and mandated by issuance of the Japan Civil Aviation Bureau (JCAB) AD No. TCD 4379–96, dated February 20, 1996, to ensure the continued airworthiness of the airplanes in Japan.

For TCDS A10SW, Service Bulletin No. 090/76–003, dated January 22, 1997, was issued by MHI, Ltd. and the compliance was mandatory. At that time, issuance of an AD by FAA was not warranted, based on the information and lack of risk assessment tools.

Recent accidents and the service history of the MU–2B series airplanes prompted FAA to conduct an MU–2B Safety Evaluation. Part of that evaluation was the identification of unsafe conditions that exist or could develop on the affected type design airplanes. Part of this evaluation was evaluating the JCAB ADs for which there were no FAA ADs. In conducting this evaluation, the team employed new analysis tools that provided a much more detailed root cause analysis of the MU–2B problems than was previously possible. The results of this evaluation warranted the issuance of this AD.

Conclusion

We have carefully reviewed the available data and determined that air safety and the public interest require adopting the AD as proposed except for minor editorial corrections. We have

determined that these minor corrections:

- Are consistent with the intent that was proposed in the NPRM for correcting the unsafe condition; and
- Do not add any additional burden upon the public than was already proposed in the NPRM.

The Agency is committed to updating the aviation community of expected costs associated with the MU–2B series airplane safety evaluation conducted in 2005. As a result of that commitment, the accumulating expected costs of all ADs related to the MU–2B series airplane safety evaluation may be found in the Final Report section at the following Web site: *http://www.faa.gov/aircraft/air_cert/design_approvals/small_airplanes/cos/mu2_foia_reading_library/.*

Costs of Compliance

We estimate that this AD affects 397 airplanes in the U.S. registry.

We estimate the following costs to do the AFM insertion:

Labor cost	Parts cost	Total cost per airplane	Total cost on U.S. operators
1 work-hour × $80 = $80	Not applicable	$80	$31,760

Authority for This Rulemaking

Title 49 of the United States Code specifies the FAA's authority to issue rules on aviation safety. Subtitle I, Section 106 describes the authority of the FAA Administrator. Subtitle VII, Aviation Programs, describes in more detail the scope of the agency's authority.

We are issuing this rulemaking under the authority described in Subtitle VII, Part A, Subpart III, Section 44701, ''General requirements.'' Under that section, Congress charges the FAA with promoting safe flight of civil aircraft in air commerce by prescribing regulations for practices, methods, and procedures the Administrator finds necessary for safety in air commerce. This regulation is within the scope of that authority because it addresses an unsafe condition that is likely to exist or develop on products identified in this AD.

Regulatory Findings

We have determined that this AD will not have federalism implications under Executive Order 13132. This AD will not have a substantial direct effect on the States, on the relationship between the national government and the States, or on the distribution of power and responsibilities among the various levels of government.

For the reasons discussed above, I certify that this AD:

1. Is not a ''significant regulatory action'' under Executive Order 12866;
2. Is not a ''significant rule'' under the DOT Regulatory Policies and Procedures (44 FR 11034, February 26, 1979); and
3. Will not have a significant economic impact, positive or negative, on a substantial number of small entities under the criteria of the Regulatory Flexibility Act.

We prepared a summary of the costs to comply with this AD (and other information as included in the Regulatory Evaluation) and placed it in the AD Docket. You may get a copy of this summary by sending a request to us at the address listed under **ADDRESSES**. Include ''Docket No. FAA–2006–23645; Directorate Identifier 2006–CE–04–AD'' in your request.

List of Subjects in 14 CFR Part 39

Air transportation, Aircraft, Aviation safety, Safety.

Adoption of the Amendment

■ Accordingly, under the authority delegated to me by the Administrator, the Federal Aviation Administration amends part 39 of the Federal Aviation Regulations (14 CFR part 39) as follows:

PART 39—AIRWORTHINESS DIRECTIVES

■ 1. The authority citation for part 39 continues to read as follows:

Authority: 49 U.S.C. 106(g), 40113, 44701.

§ 39.13 [Amended]

■ 2. FAA amends § 39.13 by adding the following new AD:

2006–15–07 Mitsubishi Heavy Industries, LTD.: Amendment 39–14687; Docket No. FAA–2006–23645; Directorate Identifier 2006–CE–04–AD.

Effective Date

(a) This AD becomes effective on August 24, 2006.

Affected ADs

(b) None.

Applicability

(c) This AD affects the following airplane models and serial numbers that are certificated in any category:

Type certificate	Models	Serial Nos.
(1) A2PC	MU–2B, MU–2B–10, MU–2B–15, MU–2B–20, MU–2B–25, and MU–2B–26.	008 through 312, 314 through 320, and 322 through 347.
(2) A2PC	MU–2B–30, MU–2B–35, and MU–2B–36	501 through 651, 653 through 660, and 662 through 696.
(3) A10SW	MU–2B–25, MU–2B–26, MU–2B–26A, and MU–2B–40	313SA, 321SA, and 348SA through 459SA.
(4) A10SW	MU–2B–35, MU–2B–36, MU–2B–36A, and MU–2B–60	652SA, 661SA, and 697SA through 1569SA.

Unsafe Condition

(d) This AD results from a recent safety evaluation that used a data-driven approach to analyze the design, operation, and maintenance of the MU–2B series airplanes in order to determine their safety and define what steps, if any, are necessary for their safe operation. Part of that evaluation was the identification of unsafe conditions that exist or could develop on the affected type design airplanes. The actions specified in this AD are intended to detect and correct improper rigging of the propeller feathering linkage. The above issue if uncorrected could result in degraded performance and poor handling qualities with consequent loss of control of the airplane.

Compliance

(e) To address this problem, you must do the following:

Actions	Compliance	Procedures
Incorporate the following information into the Limitations Section of the FAA-approved Airplane Flight Manual (AFM): (1) For airplanes listed in Type Certificate No. A2PC insert pages 3 and 4 from Mitsubishi Heavy Industries, Ltd. (MHI) MU–2 Service Bulletin No. 229, dated February 20, 1996. (2) For airplanes listed in Type Certificate No. A10SW insert page 3 of 3 from MHI MU–2 Service Bulletin No. 090/76–003, dated January 22, 1997. (3) For all of the above airplanes the logbook entry required after each pilot check on page 3 of MHI MU–2 Service Bulletin No. 090/76–003, dated January 22, 1997, and page 4 of MHI MU–2 Service Bulletin No. 229, dated February 20, 1996, is not required.	Within 100 hours time-in-service after August 24, 2006 (the effective date of this AD).	The owner/operator holding at least a private pilot certificate as authorized by section 43.7 of the Federal Aviation Regulations (14 CFR 43.7) may insert the information into the AFM as specified in paragraph (e) of this AD. Make an entry into the aircraft records showing compliance with this portion of the AD in accordance with section 43.9 of the Federal Aviation Regulations (14 CFR 43.9).

Note: The language in the service information states the procedure is an ''inspection,'' but the procedure is a ''pilot check.''

Alternative Methods of Compliance (AMOCs)

(f) The Manager, Fort Worth Aircraft Certification Office (ACO), FAA, ATTN: Rao Edupuganti, Aerospace Engineer, ASW–150, Fort Worth ACO, 2601 Meacham Blvd., Fort Worth, Texas 76193; telephone: (817) 222–5284; facsimile: (817) 222–5960, has the authority to approve AMOCs for this AD, if requested using the procedures found in 14 CFR 39.19.

Related Information

(g) Japan Civil Aviation Bureau Airworthiness Directive No. TCD 4379–96, dated February 20, 1996, addresses the subject of this AD.

(h) For service information related to this AD, contact Mitsubishi Heavy Industries America, Inc., 4951 Airport Parkway, Suite 800, Addison, Texas 75001; telephone: (972) 934–5480; facsimile: (972) 934–5488. To view the AD docket, go to the Docket Management Facility; U.S. Department of Transportation, 400 Seventh Street, SW., Nassif Building, Room PL–401, Washington, DC 20590–001 or on the Internet at *http://dms.dot.gov.* The docket number is FAA–2006–23645; Directorate Identifier 2006–CE–04–AD.

Issued in Kansas City, Missouri, on July 11, 2006.

Steven W. Thompson,

Acting Manager, Small Airplane Directorate, Aircraft Certification Service.

[FR Doc. E6–11419 Filed 7–19–06; 8:45 am]

BILLING CODE 4910–13–P

DEPARTMENT OF TRANSPORTATION

Federal Aviation Administration

14 CFR Part 39

[Docket No. FAA–2006–23675; Directorate Identifier 2001–NM–320–AD; Amendment 39–14686; AD 2006–15–06]

RIN 2120–AA64

Airworthiness Directives; Airbus Model A300 B2–203 and A300 B4–203 Airplanes; Model A300 B4–600, B4–600R, and F4–600R Series Airplanes, and Model C4–605R Variant F Airplanes (Collectively Called A300–600 Series Airplanes); and Model A310–200 and –300 Series Airplanes

AGENCY: Federal Aviation Administration (FAA), Department of Transportation (DOT).

ACTION: Final rule.

SUMMARY: The FAA is superseding an existing airworthiness directive (AD), which applies to certain Airbus Model A300 series airplanes and all Model A300–600 and A310 series airplanes. That AD currently requires repetitive inspections of the pitch trim system to detect continuity defects in the autotrim function, and follow-on corrective actions if necessary. For certain airplanes, this new AD requires replacing the flight augmentation computers (FACs) with new improved FACs. This AD also revises the applicability of the existing AD. This AD results from the development of a final action intended to address the unsafe condition. We are issuing this AD to prevent a sudden change in pitch due to an out-of-trim condition combined with an autopilot disconnect, which could result in reduced controllability of the airplane.

DATES: This AD becomes effective August 24, 2006.

The Director of the Federal Register approved the incorporation by reference of certain publications listed in the AD as of August 24, 2006.

On December 20, 2000 (65 FR 68876, November 15, 2000), the Director of the Federal Register approved the incorporation by reference of certain other publications listed in the AD.

ADDRESSES: You may examine the AD docket on the Internet at *http://dms.dot.gov* or in person at the Docket Management Facility, U.S. Department of Transportation, 400 Seventh Street, SW., Nassif Building, Room PL–401, Washington, DC.

Contact Airbus, 1 Rond Point Maurice Bellonte, 31707 Blagnac Cedex, France, for service information identified in this AD.

FOR FURTHER INFORMATION CONTACT: Tim Backman, Aerospace Engineer, International Branch, ANM–116, Transport Airplane Directorate, FAA, 1601 Lind Avenue, SW., Renton, Washington 98055–4056; telephone (425) 227–2797; fax (425) 227–1149.

SUPPLEMENTARY INFORMATION:

Examining the Docket

You may examine the airworthiness directive (AD) docket on the Internet at *http://dms.dot.gov* or in person at the Docket Management Facility office between 9 a.m. and 5 p.m., Monday through Friday, except Federal holidays. The Docket Management Facility office (telephone (800) 647–5227) is located on the plaza level of the Nassif Building at the street address stated in the **ADDRESSES** section.

Discussion

The FAA issued a notice of proposed rulemaking (NPRM) to amend 14 CFR part 39 to include an AD that supersedes AD 2000–23–07, amendment 39–11977 (65 FR 68876, November 15, 2000). The existing AD applies to

certain Airbus Model A300 series airplanes and all Model A300–600 and A310 series airplanes. That NPRM was published in the **Federal Register** on January 25, 2006 (71 FR 4062). That NPRM proposed to require repetitive inspections of the pitch trim system to detect continuity defects in the autotrim function, and follow-on corrective actions if necessary. That NPRM also proposed to require replacing the flight augmentation computers (FACs) with new improved FACs on certain airplanes.

Comments

We provided the public the opportunity to participate in the development of this AD. We have considered the comments that have been received on the NPRM.

Request To Revise Applicability: Paragraph (c)(1)

The commenter, Airbus, requests that we revise paragraph (c)(1) of the NPRM to retain the applicability of the existing AD for A300 B2–203 and A300 B4–203 airplanes. The applicability of AD 2000–23–07 for those airplanes is:

> Model A300 B2–203 and A300 B4–203 airplanes in a forward facing cockpit version, as listed in Airbus Service Bulletin A300–22A0115, Revision 02, dated March 7, 2000.

The applicability specified in paragraph (c)(1) of the NPRM omitted the restriction ''in a forward facing cockpit version.'' The commenter asserts that the mandatory actions for those airplanes are restated from AD 2000–23–07, so no new requirements for those airplanes are introduced in this AD.

We agree that this AD adds no new requirements for those airplanes. In the revised applicability for those airplanes, the forward-facing-cockpit restriction is removed because it is included in the service bulletin effectivity. We have not revised the applicability specified in the NPRM.

Request To Revise Applicability: Paragraph (c)(3)

The same commenter found a typographical error in the NPRM. Paragraph (c)(3), which identifies affected A310–200 and –300 series airplanes by their associated modification number, should have referred to Modification 12931 instead of Modification 12932.

We acknowledge this error and have revised this final rule accordingly.

Additional Changes to NPRM

The requirements of paragraph (f) of the NPRM would apply to ''airplanes subject to the requirements of AD 2000–23–07,'' which include:

- Model A300 B2–203 and A300 B4–203 airplanes in a forward-facing cockpit configuration;
- All Model A310–200 and –300 series airplanes; and
- Model A300–600 series airplanes, except those with Modification 12277 installed in production.

We have revised this description to clarify the affected airplanes. Once an AD is superseded, no airplane is subject to its requirements, and it may not be possible for operators to obtain a copy to identify the affected airplanes and requirements. Because AD compliance records must be maintained permanently and transferred with airplanes, operators must always be able to determine whether a particular AD has been accomplished, even after it has been superseded. Therefore, we have revised paragraph (f) in this final rule to more precisely describe the airplanes affected by that requirement.

We have also clarified paragraph (g) in this final rule by introducing the paragraph with the airplanes affected by this new requirement. Those airplanes are also identified in Table 1 of the AD.

Conclusion

We have carefully reviewed the available data, including the comments that have been received, and determined that air safety and the public interest require adopting the AD with the changes described previously. We have determined that these changes will neither increase the economic burden on any operator nor increase the scope of the AD.

Costs of Compliance

This AD affects about 86 airplanes of U.S. registry. The following table provides the estimated costs for U.S. operators to comply with this AD.

COST ESTIMATES

Action	Service bulletins	Work hours	Hourly labor rate	Parts cost	Total per airplane
Inspection, per inspection cycle	A300–22A6042, A300–22A0115, A310–22A2053.	1	$65	None	$65, per inspection cycle.
FAC replacement	A300–22–6050, A310–22–2058	9	65	$2,677	$3,262.

Authority for this Rulemaking

Title 49 of the United States Code specifies the FAA's authority to issue rules on aviation safety. Subtitle I, Section 106, describes the authority of the FAA Administrator. Subtitle VII, Aviation Programs, describes in more detail the scope of the Agency's authority.

We are issuing this rulemaking under the authority described in Subtitle VII, Part A, Subpart III, Section 44701, ''General requirements.'' Under that section, Congress charges the FAA with promoting safe flight of civil aircraft in air commerce by prescribing regulations for practices, methods, and procedures the Administrator finds necessary for safety in air commerce. This regulation is within the scope of that authority because it addresses an unsafe condition that is likely to exist or develop on products identified in this rulemaking action.

Regulatory Findings

We have determined that this AD will not have federalism implications under Executive Order 13132. This AD will not have a substantial direct effect on the States, on the relationship between the national government and the States, or on the distribution of power and responsibilities among the various levels of government.

For the reasons discussed above, I certify that this AD:

(1) Is not a ''significant regulatory action'' under Executive Order 12866;

(2) Is not a ''significant rule'' under DOT Regulatory Policies and Procedures (44 FR 11034, February 26, 1979); and

(3) Will not have a significant economic impact, positive or negative, on a substantial number of small entities under the criteria of the Regulatory Flexibility Act.

We prepared a regulatory evaluation of the estimated costs to comply with this AD and placed it in the AD docket. See the **ADDRESSES** section for a location to examine the regulatory evaluation.

List of Subjects in 14 CFR Part 39

Air transportation, Aircraft, Aviation safety, Incorporation by reference, Safety.

Adoption of the Amendment

■ Accordingly, under the authority delegated to me by the Administrator, the FAA amends 14 CFR part 39 as follows:

PART 39—AIRWORTHINESS DIRECTIVES

■ 1. The authority citation for part 39 continues to read as follows:

Authority: 49 U.S.C. 106(g), 40113, 44701.

§ 39.13 [Amended]

■ 2. The Federal Aviation Administration (FAA) amends § 39.13 by removing amendment 39–11977 (65 FR 68876, November 15, 2000) and by adding the following new airworthiness directive (AD):

2006–15–06 Airbus: Amendment 39–14686. Docket No. FAA–2006–23675; Directorate Identifier 2001–NM–320–AD.

Effective Date

(a) This AD becomes effective August 24, 2006.

Affected ADs

(b) This AD supersedes AD 2000–23–07.

Applicability

(c) This AD applies to the following Airbus airplanes, certificated in any category.

(1) Model A300 B2–203 and A300 B4–203 airplanes, as identified in Airbus Service Bulletin A300–22A0115, Revision 02, dated March 7, 2000.

(2) Model A300 B4–601, B4–603, B4–620, B4–622, A300 B4–605R, B4–622R, A300 F4–605R, F4–622R, and A300 C4–605R Variant F airplanes, except those modified in production by Airbus Modification 12932.

(3) Model A310–203, –204, –221, –222, –304, –322, –324, and –325 airplanes, except those modified in production by Airbus Modification 12931.

Unsafe Condition

(d) This AD results from the development of final action intended to address the unsafe condition. We are issuing this AD to prevent a sudden change in pitch due to an out-of-trim condition combined with an autopilot disconnect, which could result in reduced controllability of the airplane.

Compliance

(e) You are responsible for having the actions required by this AD performed within the compliance times specified, unless the actions have already been done.

Restatement of Requirements of AD 2000–23–07

Repetitive Inspections

(f) For Model A300 B2–203 and A300 B4–203 airplanes in a forward-facing cockpit configuration; all Model A310–200 and –300 series airplanes; and Model A300–600 series airplanes, except those with Modification 12277 installed in production: At the applicable time specified by paragraph (f)(1) or (f)(2) of this AD, perform an inspection of the autotrim function by testing the flight control computer (FCC)/flight augmentation computer (FAC) integrity in logic activation of the autotrim, in accordance with Airbus Service Bulletin A300–22A6042, Revision 01 (for Model A300–600 series airplanes); A300–22A0115, Revision 02 (for Model A300 series airplanes); or A310–22A2053, Revision 01 (for Model A310 series airplanes); all dated March 7, 2000; as applicable. If any discrepancy is found, prior to further flight, perform all applicable corrective actions (including trouble-shooting; replacing the FCC and/or FAC, as applicable; retesting; checking the wires between certain FCC and FAC pins; and repairing damaged wires) in accordance with the applicable service bulletin. Repeat the inspection thereafter at intervals not to exceed 500 flight hours. Replacement of both FACs in accordance with paragraph (g) of this AD terminates the inspection requirements of this paragraph.

(1) For airplanes on which the pitch trim system test has been performed in accordance with the requirements of AD 2000–02–04, amendment 39–11522: Inspect within 500 flight hours after accomplishment of the test required by that AD, or within 20 days after December 20, 2000 (the effective date of AD 2000–23–07), whichever occurs later.

(2) For all other airplanes: Inspect within 20 days after December 20, 2000.

New Requirements of this AD

FAC Replacement

(g) For airplanes identified in paragraphs (c)(2) and (c)(3) of this AD: At the time specified in Table 1 of this AD, replace the two FACs with new FACs in accordance with the Accomplishment Instructions of Airbus Service Bulletin A300–22–6050, dated October 8, 2004; or A310–22–2058, dated April 6, 2005; as applicable.

TABLE 1.—COMPLIANCE TIMES TO REPLACE FACS

Airplane model/series	Configuration	Required compliance time after the effective date of this AD
A300–600	Without accomplishment of Airbus Service Bulletin A300–22–6041, Revision 01, dated February 21, 2001, or previous version, or Modification 12277. And without accomplishment of Airbus Service Bulletin A300–22–6050, dated October 8, 2004, or Modification 12932.	24 months.
	With accomplishment of Airbus Service Bulletin A300–22–6041, Revision 01, dated February 21, 2001, or previous version, or Modification 12277. And without accomplishment of Airbus Service Bulletin A300–22–6050, dated October 8, 2004, or Modification 12932.	36 months.
A310	Without accomplishment of Airbus Service Bulletin A310–22–2052, Revision 01, dated November 8, 2001, or previous version, or Modification 12277. And without accomplishment of Airbus Service Bulletin A310–22–2058, dated April 6, 2005, or Modification 12931.	24 months.
	With accomplishment of Airbus Service Bulletin A310–22–2052, Revision 01, dated November 8, 2001, or previous version, or Modification 12277. And without accomplishment of Airbus Service Bulletin A310–22–2058, dated April 6, 2005, or Modification 12931.	36 months.

Part Installation

(h) On or after the effective date of this AD, no person may install, on any airplane, any FAC having part number (P/N) B471AAM7 (for Model A300–600 series airplanes) or FAC P/N B471ABM4 (for Model A310 series airplanes), unless the FAC is in compliance with this AD.

Alternative Methods of Compliance (AMOCs)

(i)(1) The Manager, International Branch, ANM–116, Transport Airplane Directorate, FAA, has the authority to approve AMOCs

for this AD, if requested in accordance with the procedures found in 14 CFR 39.19.

(2) Before using any AMOC approved in accordance with 14 CFR 39.19 on any airplane to which the AMOC applies, notify the appropriate principal inspector in the FAA Flight Standards Certificate Holding District Office.

Related Information

(j) The subject of this AD is addressed in French airworthiness directives F–2005–111 R1, dated December 21, 2005, and F–2000–115–304 R5, dated July 6, 2005.

Material Incorporated by Reference

(k) You must use the documents identified in Table 2 of this AD, as applicable, to perform the actions that are required by this AD, unless the AD specifies otherwise.

TABLE 2.—DOCUMENTS INCORPORATED BY REFERENCE

Airbus Service Bulletin	Revision	Date
A300–22–6050	Original	October 8, 2004.
A300–22A0115	02, including Appendix 01	March 7, 2000.
A300–22A6042	01, including Appendix 01	March 7, 2000.
A310–22–2058	Original	April 6, 2005.
A310–22A2053	01, including Appendix 01	March 7, 2000.

(1) The Director of the Federal Register approved the incorporation by reference of the documents identified in Table 3 of this AD in accordance with 5 U.S.C. 552(a) and 1 CFR part 51.

TABLE 3.—NEW DOCUMENTS INCORPORATED BY REFERENCE

Airbus Service Bulletin	Revision	Date
A300–22–6050	Original	October 8, 2004.
A310–22–2058	Original	April 6, 2005.

(2) On December 20, 2000 (65 FR 68876, November 15, 2000), the Director of the Federal Register approved the incorporation by reference of the documents identified in Table 4 of this AD.

TABLE 4.—DOCUMENTS PREVIOUSLY INCORPORATED BY REFERENCE

Airbus Service Bulletin	Revision	Date
A300–22A0115	02, including Appendix 01	March 7, 2000.
A300–22A6042	01, including Appendix 01	March 7, 2000.
A310–22A2053	01, including Appendix 01	March 7, 2000.

(3) Contact Airbus, 1 Rond Point Maurice Bellonte, 31707 Blagnac Cedex, France, for a copy of this service information. You may review copies at the Docket Management Facility, U.S. Department of Transportation, 400 Seventh Street, SW., Room PL–401, Nassif Building, Washington, DC; on the Internet at *http://dms.dot.gov;* or at the National Archives and Records Administration (NARA). For information on the availability of this material at the NARA, call (202) 741–6030, or go to *http://www.archives.gov/federal_register/code_of_federal_regulations/ibr_locations.html.*

Issued in Renton, Washington, on July 7, 2006.

Ali Bahrami,

Manager, Transport Airplane Directorate, Aircraft Certification Service.

[FR Doc. E6–11414 Filed 7–19–06; 8:45 am]

BILLING CODE 4910–13–P

DEPARTMENT OF TRANSPORTATION

Federal Aviation Administration

14 CFR Part 39

[Docket No. FAA–2006–23706; Directorate Identifier 2006–NE–03–AD; Amendment 39–14688; AD 2006–15–08]

RIN 2120–AA64

Airworthiness Directives; Honeywell International Inc. TPE331 Series Turboprop Engines

AGENCY: Federal Aviation Administration (FAA), Department of Transportation (DOT).

ACTION: Final rule.

SUMMARY: The FAA is adopting a new airworthiness directive (AD) for Honeywell International Inc. TPE331 series turboprop engines with certain part numbers of Woodward fuel control unit (FCU) assemblies installed. This AD requires initial and repetitive dimensional inspections of the fuel control drive, for wear or damage. This AD results from reports of loss of the fuel control drive, leading to engine overspeed, overtorque, overtemperature, uncontained rotor failure, and asymmetric thrust in multi-engine airplanes. We are issuing this AD to prevent destructive overspeed that could result in uncontained rotor failure, and damage to the airplane.

DATES: This AD becomes effective August 24, 2006.

ADDRESSES: You can get the service information identified in this AD from Honeywell Engines, Systems & Services, Technical Data Distribution, M/S 2101–201, P.O. Box 52170, Phoenix, AZ 85072–2170; telephone: (602) 365–2493 (General Aviation); (602) 365–5535 (Commercial); fax: (602) 365–5577 (General Aviation and Commercial).

You may examine the AD docket on the Internet at *http://dms.dot.gov* or in Room PL–401 on the plaza level of the

Nassif Building, 400 Seventh Street, SW., Washington, DC.

FOR FURTHER INFORMATION CONTACT: Joseph Costa, Aerospace Engineer, Los Angeles Aircraft Certification Office, FAA, Transport Airplane Directorate, 3960 Paramount Blvd., Lakewood, CA 90712–4137; telephone (562) 627–5246; fax (562) 627–5210.

SUPPLEMENTARY INFORMATION: The FAA proposed to amend 14 CFR part 39 with a proposed airworthiness directive (AD). The proposed AD applies to Honeywell International Inc. TPE331 series turboprop engines with certain part numbers of Woodward FCU assemblies installed. We published the proposed AD in the **Federal Register** on March 8, 2006 (71 FR 11546). That action proposed to require initial and repetitive dimensional inspections of the drive splines between the fuel pump and fuel control governor, for wear or damage.

Examining the AD Docket

You may examine the docket that contains the AD, any comments received, and any final disposition in person at the Docket Management Facility Docket Office between 9 a.m. and 5 p.m., Monday through Friday, except Federal holidays. The Docket Office (telephone (800) 647–5227) is located on the plaza level of the Department of Transportation Nassif Building at the street address stated in **ADDRESSES**. Comments will be available in the AD docket shortly after the DMS receives them.

Comments

We provided the public the opportunity to participate in the development of this AD. We have considered the comments received.

Clarification of Discussion Paragraph

Honeywell International Inc. points out that in the discussion section of the Notice of Proposed Rulemaking we stated that installation of an improved fuel control will eliminate the overspeed condition by better accommodating a drive spline failure. Honeywell suggests that we change the discussion to state that replacing an affected fuel control assembly with an improved fuel control assembly will only reduce the possibility of an overspeed, rather than eliminate it altogether. We agree that Honeywell's suggestion has some logic from a risk management perspective. We recognize that the improved fuel control may not eliminate the possibility of a drive spline failure or the resulting engine overspeed condition, but we intend that it will eliminate a destructive overspeed due to this spline failure. We have, however, changed paragraph (d) of the final rule (the statement of the unsafe condition) to clarify that we expect that the AD will prevent destructive overspeed that could result in uncontained rotor failure, and damage to the airplane.

Suggestion to Specifically Reference Pump Splines

Honeywell International Inc. also suggests that we add the words ''or pump'' after ''fuel control'' in both paragraphs (f)(2) and (g)(2) of the proposed rule. Honeywell points out that the proposed inspections also include the fuel pump spline as well as the fuel control splines. We agree that the required inspections include the fuel pump spline and that if the fuel pump spline fails inspection, the fuel pump would require repair or replacement. Therefore, we have added references to the fuel pump in paragraphs (f), (g), and (l) of the final rule. We have also split the repair and replace requirement in paragraphs (f) and (g) into one sub-paragraph for the fuel pump, (f)(2) and (g)(2), and one for the fuel control assembly, (f)(3) and (g)(3), which we now refer to as the fuel control unit (FCU) assembly. We made these changes to keep clear that the replacement requirements of the AD call for ''modified'' FCU assemblies for multi-engine airplanes. Fuel pump assemblies whose splines fail dimensional inspection may be replaced with serviceable fuel pump assemblies.

Request To Add the Word ''Governor''

Honeywell International Inc. also requests that we add the word ''governor'' to describe the splined driveshafts between the fuel pump and the FCU. Honeywell points out that the proposal could be read so as not to include a required inspection of the quill shaft internal to the fuel control. We agree, and have added a definition of the term ''fuel control drive'' to paragraph (k) of the final rule that includes the change of ''fuel control'' to ''fuel control governor.''

Claim That Destructive Overspeed Is Still Possible

An FAA-approved repair station, Turbine Standard, Ltd, claims that destructive engine overspeed is really only possible on the ground with the prop ''on the start locks'' and will continue to be possible with the new modified fuel control assembly. The commenter states that according to Honeywell's Operating Information Letters OI331–12R4, dated March 29, 2006, and OI331–18R2, dated March 29, 2006, the possibility of uncontained separation of the engine's high speed rotating components still exists, at certain conditions. Furthermore, the commenter appears to question the need for this AD by pointing out that wear of the FCU and fuel pump drive can be adequately managed by following the recommended maintenance program for the engine and that any FCUs that showed heavy spline wear were addressed by a previous AD, AD 94–26–07.

We do not agree. The proposed rule and this AD address a continuing problem that has caused 51 known incidents over the past 30 years. We believe that the fuel pump and fuel control spline failures represent a serious unsafe condition that requires mandatory inspections and replacement of existing fuel control designs to warrant AD action rather than reliance on recommended maintenance practices. Even after issuing AD 94–26–07, we continue to receive reports of fuel control drive failures, overspeed, and destructive overspeed events. With a modified FCU installed, AD 94–26–07 will no longer apply.

Whether destructive overspeeds will continue to be possible with the new modified fuel control assembly, we recognize that this failure condition is rare and only exists under certain high-temperature and high-altitude ground start conditions, with certain older design engines while the prop is ''on the locks''. When this set of rare conditions is coupled with the fuel control drive low failure rate, a destructive overspeed is improbable. We consider the modified FCU assembly to be safe.

Claim That Asymmetric Thrust Would be More Prevalent

Turbine Standard, Ltd also claims that the modified fuel control assembly installed on an engine on a multi-engine airplane would actually make asymmetric thrust more likely in the event of a fuel pump or fuel control drive spline failure. The commenter explains that after the failure of a fuel control drive on a modified fuel control assembly, the modified fuel control would deliver only 180 PPH of fuel flow, which is below flight idle fuel flow. Since fuel flows for take off thrust are normally very high and the failure mode of an unmodified fuel control unit typically delivers more fuel flow, the commenter concludes that the aircrew would be in a worse situation with a modified fuel control after suffering drive spline failure than with a non-modified fuel control.

We do not agree. While it is true that the fuel flow after drive spline failure

with a modified fuel control unit may result in a more pronounced asymmetric thrust condition at takeoff, we believe that after considering all ground and flight conditions, the modified FCU assembly is much safer than the applicable FCU assembly on the multi-engine aircraft. In addition, with a modified fuel control, the failure mode would produce a clearly evident decrease in thrust that a trained aircrew can easily recognize and safely handle, even on takeoff.

AD Does Not Address Recommendations to the Pilot on Negative Torque Sensing

Turbine Standard, Ltd also claims that the proposed AD does not address recommendations to the pilot if the engine starts to experience ''negative torque sensing'' during flight. The commenter reasons that after the failure of a fuel control drive spline, the modified fuel control assembly will deliver 180 PPH of fuel flow, which may be below flight idle fuel flow, and the engine may experience negative torque sensing (NTS). In addition, ''negative torque sensing'' at higher than normal engine speeds for long periods, might damage the propeller.

We do not agree that the AD needs to include mandatory instructions to the aircrew concerning NTS. The commenter is correct that during flight with the modified FCU assembly installed, the engine may experience NTS after failure of a fuel control drive. We believe that having the pilot shut down the engine as soon as possible after drive spline failure by recognizing an unresponsive power lever, consistent with the safe operation of the airplane, is the best action. We have changed paragraph (o) of the final rule to reference Honeywell's operating information letters.

Claim That the Modified FCU Assembly Is Not Necessary

Lastly, Turbine Standard, Ltd claims that the modified FCU assembly is not necessary because of the propeller governor response to an engine overspeed, if the airplane is equipped with torque and temperature limiting (TTL) devices. The commenter believes that fuel bypassing the TTL devices and the propeller governor should maintain engine speed at its set point after a fuel control drive failure.

We do not agree. Engine testing shows that the TTL devices cannot bypass sufficient fuel and the propeller governor cannot maintain speed consistently enough to ensure a safe operation of the TPE331 engine. In addition, since the TTL devices are optional devices for some aircraft, the TTL's marginal and temporary benefit is not a safe alternative.

Conclusion

We have carefully reviewed the available data, including the comments received, and determined that air safety and the public interest require adopting the AD with the changes described previously. We have determined that these changes will neither increase the economic burden on any operator nor increase the scope of the AD.

Costs of Compliance

We estimate this AD will affect 3,250 engines installed on airplanes of U.S. registry. We also estimate it will take about one work-hour per engine to replace the FCU assembly during a normal scheduled overhaul. We also estimate it will take about three work-hours to perform a dimensional inspection of the fuel control drive. The average labor rate is $65 per work-hour. A replacement FCU assembly will cost about $9,700 per engine. We estimate that on each engine, one FCU assembly inspection will be performed, and each engine will have the FCU assembly replaced. Based on these figures, we estimate the total cost of the AD to U.S. operators to be $32,370,000.

The Agency is committed to updating the aviation community of expected costs associated with the MU–2B series airplane safety evaluation conducted in 2005. As a result of that commitment, the accumulating expected costs of all ADs related to the MU–2B series airplane safety evaluation may be found at the following Web site: *http://www.faa.gov/aircraft/air_cert/design_approvals/small_airplanes/cos/mu2_foia_reading_library/*.

Authority for This Rulemaking

Title 49 of the United States Code specifies the FAA's authority to issue rules on aviation safety. Subtitle I, Section 106, describes the authority of the FAA Administrator. Subtitle VII, Aviation Programs, describes in more detail the scope of the Agency's authority.

We are issuing this rulemaking under the authority described in Subtitle VII, Part A, Subpart III, Section 44701, ''General requirements.'' Under that section, Congress charges the FAA with promoting safe flight of civil aircraft in air commerce by prescribing regulations for practices, methods, and procedures the Administrator finds necessary for safety in air commerce. This regulation is within the scope of that authority because it addresses an unsafe condition that is likely to exist or develop on products identified in this rulemaking action.

Regulatory Findings

We have determined that this AD will not have federalism implications under Executive Order 13132. This AD will not have a substantial direct effect on the States, on the relationship between the national government and the States, or on the distribution of power and responsibilities among the various levels of government.

For the reasons discussed above, I certify that this AD:

(1) Is not a ''significant regulatory action'' under Executive Order 12866;

(2) Is not a ''significant rule'' under DOT Regulatory Policies and Procedures (44 FR 11034, February 26, 1979); and

(3) Will not have a significant economic impact, positive or negative, on a substantial number of small entities under the criteria of the Regulatory Flexibility Act.

We prepared a summary of the costs to comply with this AD and placed it in the AD Docket. You may get a copy of this summary at the address listed under **ADDRESSES**.

List of Subjects in 14 CFR Part 39

Air transportation, Aircraft, Aviation safety, Safety.

Adoption of the Amendment

■ Accordingly, under the authority delegated to me by the Administrator, the Federal Aviation Administration amends 14 CFR part 39 as follows:

PART 39—AIRWORTHINESS DIRECTIVES

■ 1. The authority citation for part 39 continues to read as follows:

Authority: 49 U.S.C. 106(g), 40113, 44701.

§ 39.13 [Amended]

■ 2. The FAA amends § 39.13 by adding the following new airworthiness directive:

2006–15–08 Honeywell International Inc. (formerly AlliedSignal Inc., Garrett Engine Division; Garrett Turbine Engine Company; and AiResearch Manufacturing Company of Arizona): Amendment 39–14688; Docket No. FAA–2006–23706; Directorate Identifier 2006–NE–03–AD.

Effective Date

(a) This airworthiness directive (AD) becomes effective August 24, 2006.

Affected ADs

(b) None.

Applicability

(c) This AD applies to Honeywell International Inc. TPE331–1, –2, –2UA, –3U,

–3UW, –5, –5A, –5AB, –5B, –6, –6A, –10, –10AV, –10GP, –10GT, –10P, –10R, –10T, –10U, –10UA, –10UF, –10UG, –10UGR, –10UR, –11U, –12JR, –12UA, –12UAR, and –12UHR turboprop engines with the part numbers (P/Ns) of Woodward fuel control unit (FCU) assemblies listed in this AD, installed. These engines are installed on, but not limited to, the following airplanes:

Manufacturer	Model
AERO PLANES, LLC (formerly McKinnon Enterprises)	G–21G.
ALLIED AG CAT PRODUCTIONS (formerly Schweizer)	G–164 Series.
AYRES	S–2R Series.
BRITISH AEROSPACE LTD (formerly Jetstream)	3101 and 3201 Series, and HP.137 JETSTREAM MK.1.
CONSTRUCCIONES AERONAUTICAS, S.A. (CASA)	C–212 Series.
DEHAVILLAND	DH104 Series 7AXC (DOVE).
DORNIER	228 Series.
FAIRCHILD	SA226 and SA227 Series (SWEARINGEN MERLIN and METRO SERIES).
GRUMMAN AMERICAN	G–164 Series.
MITSUBISHI	MU–2B Series (MU–2 Series).
PILATUS	PC–6 Series (FAIRCHILD PORTER and PEACEMAKER).
POLSKIE ZAKLADY LOTNICZE SPOLKA (formerly Wytwornia Sprzetu Komunikacyjnego).	PZL M18, PZL M18A, PZL M18B.
PROP-JETS, INC.	400.
RAYTHEON AIRCRAFT (formerly Beech)	C45G, TC–45G, C–45H, TC–45H, TC–45J, G18S, E18S–9700, D18S, D18C, H18, RC–45J, JRB–6, UC–45J, 3N, 3NM, 3TM, B100, C90 and E90.
SHORTS BROTHERS and HARLAND, LTD.	SC7 (SKYVAN) Series.
THRUSH (ROCKWELL COMMANDER)	S–2R.
TWIN COMMANDER (JETPROP COMMANDER)	680, 690 and 695 Series.

Unsafe Condition

(d) This AD results from reports of loss of the fuel control drive, leading to engine overspeed, overtorque, overtemperature, uncontained rotor failure, and asymmetric thrust in multi-engine airplanes. We are issuing this AD to prevent destructive overspeed that could result in uncontained rotor failure, and damage to the airplane.

Compliance

(e) You are responsible for having the actions required by this AD performed within the compliance times specified unless the actions have already been done.

Initial Inspection of Engines With Affected FCU Assemblies

(f) At the next scheduled inspection of the fuel control drive, but within 1,000 hours-in-service after the effective date of this AD:

(1) Perform an initial dimensional inspection of the fuel control drive for wear or damage. Information on spline inspection can be found in Section 72–00–00 of the applicable maintenance manuals.

(2) Repair or replace the fuel pump, if the spline fails the dimensional inspection, with any serviceable fuel pump.

(3) Repair or replace the FCU assembly, if the splines fail the dimensional inspection, with a serviceable modified FCU assembly.

Repetitive Inspections of Engines With Affected FCU Assemblies

(g) Thereafter, within 1,000 hours since-last-inspection:

(1) Perform repetitive dimensional inspections of the fuel control drive, for wear or damage. Information on spline inspection can be found in Section 72–00–00 of the applicable maintenance manuals.

(2) Repair or replace the fuel pump, if the spline fails the dimensional inspection, with any serviceable fuel pump.

(3) Repair or replace the FCU assembly if the splines fail the dimensional inspection, with a serviceable modified FCU assembly.

TPE331–1, –2, and –2UA Series Engines

(h) For TPE331–1, –2, and –2UA series engines, replace Woodward FCU assemblies, P/Ns 869199–13/ –20/ –21/ –22/ –23/ –24/–25/ –26/ –27/ –28/ –29/ –31/ –32/ –33/ –34, and –35, with a serviceable, modified FCU assembly the next time the FCU assembly is removed for cause that requires return, or when the FCU assembly requires overhaul, but not later than December 31, 2012. Information on replacement FCU assembly P/Ns, configuration management, rework, and replacement information, can be found in Honeywell Alert Service Bulletin (ASB) No. TPE331–A73–0271, Revision 1, dated January 25, 2006.

TPE331–3U, –3UW, –5, –5A, –5AB, –5B, –6, –6A, –10AV, –10GP, –10GT, –10P, and –10T Series Engines

(i) For TPE331–3U, –3UW, –5, –5A, –5AB, –5B, –6, –6A, –10AV, –10GP, –10GT, –10P, and –10T series engines, replace Woodward FCU assemblies, P/Ns 893561–7/ –8/ –9/ –10/ –11/ –14/ –15/ –16/ –20/ –26/ –27, and –29, and P/Ns 897770–1/ –3/ –7/ –9/ –10/ –11/ –12/ –14 / –15/ –16/ –25/ –26, and –28, with a serviceable, modified FCU assembly the next time the FCU assembly is removed for cause that requires return, or when the FCU assembly requires overhaul, but not later than December 31, 2012. Information on replacement FCU assembly P/Ns, configuration management, rework, and replacement information, can be found in Honeywell ASB No. TPE331–A73–0262, Revision 2, dated June 17, 2005.

TPE331–10, –10R, –10U, –10UA, –10UF, –10UG, –10UGR, –10UR, –11U, –12JR, –12UA, –12UAR, and –12UHR Series Engines

(j) For TPE331–10, –10R, –10U, –10UA, –10UF, –10UG, –10UGR, –10UR, –11U, –12JR, –12UA, –12UAR, and –12UHR series engines, replace Woodward FCU assemblies, P/Ns 897375–2/ –3/ –4/ –5/ –8/ –9/ –10/ –11/ –12/ –13/ –14/ –15/ –16/ –17/ –19/ –21/ –24/ –25/ –26, and –27, and P/Ns 897780–1/ –2/ –3/ –4/ –5/ –6/ –7/ –8/ –9/ –10/ –11/ –14/ –15/ –16/ –17/ –18/ –19/ –20/ –21/ –22/ –23/ –24/ –25/ –26/ –27/ –30/ –32/ –34/ –36/ –37, and –38, and P/Ns 893561–17/ –18, and –19, with a serviceable, modified FCU assembly the next time the FCU assembly is removed for cause that requires return, or when the FCU assembly requires overhaul, but not later than December 31, 2012. Information on replacement FCU assembly P/Ns, configuration management, rework, and replacement information, can be found in Honeywell ASB No. TPE331–A73–0254, Revision 2, dated June 17, 2005.

Definitions

(k) For the purposes of this AD:

(1) A ''serviceable, modified FCU assembly'' for engines affected by paragraph (h), (i), or (j) of this AD, is an FCU assembly with a P/N not listed in this AD.

(2) The ''fuel control drive'' is a series of mating splines located between the fuel pump and fuel control governor, consisting of the following four drive splines: The fuel pump internal spline, the fuel control external ''quill shaft'' spline, and the stub shaft internal and external splines.

(3) A ''removal for cause that requires return'', for engines affected by paragraph (h), (i), or (j) of this AD, is an FCU assembly that has displayed an unserviceable or unacceptable operating condition requiring the FCU to be removed from service and sent to a repair or overhaul shop.

Optional Method of Compliance for TPE331 Series Engines Installed On Single-Engine Airplanes

(l) As an optional method of compliance to paragraph (h), (i), or (j) of this AD, for TPE331 series engines installed on single-engine airplanes, having an affected Woodward FCU assembly perform the following steps as necessary:

(1) Continue repetitive dimensional inspections of the fuel control drive, for wear or damage as specified in paragraph (g)(1) of this AD.

(2) Repair or replace the fuel pump or FCU assembly if the splines fail the dimensional inspection, with any serviceable fuel pump or FCU assembly.

Terminating Action

(m) Performing an FCU assembly replacement as specified in paragraph (h), (i), or (j) of this AD, is terminating action for the initial and repetitive inspections required by this AD.

Alternative Methods of Compliance

(n) The Manager, Los Angeles Aircraft Certification Office, has the authority to approve alternative methods of compliance for this AD if requested using the procedures found in 14 CFR 39.19.

Related Information

(o) Information pertaining to operating recommendations for applicable engines after a fuel control drive failure is contained in OI 331–12R5 dated July 10, 2006, for multi-engine airplanes and in OI 331–18R3 dated July10, 2006, for single-engine airplanes.

Issued in Burlington, Massachusetts, on July 14, 2006.

Francis A. Favara,

Manager, Engine and Propeller Directorate, Aircraft Certification Service.

[FR Doc. E6–11540 Filed 7–19–06; 8:45 am]

BILLING CODE 4910–13–P

DEPARTMENT OF HEALTH AND HUMAN SERVICES

Food and Drug Administration

21 CFR Part 73

[Docket No. 1998C–0431] (formerly 98C–0431)

Listing of Color Additives Exempt From Certification; Mica-Based Pearlescent Pigments

AGENCY: Food and Drug Administration, HHS.

ACTION: Final rule; response to objections; removal of stay.

SUMMARY: The Food and Drug Administration (FDA) is responding to two objections that it received on the final rule that amended the color additive regulations to provide for the safe use of mica-based pearlescent pigments as color additives in ingested drugs. After reviewing the objections, the agency has concluded that the objections do not raise issues of material fact that justify a hearing or otherwise provide a basis for revoking the amendment to the regulations. FDA is also establishing a new effective date for this color additive regulation, which was stayed by the filing of objections.

DATES: The final rule that published in the **Federal Register** of July 22, 2005 (the July 2005 final rule) (70 FR 42271), with an effective date of August 23, 2005, was stayed by the filing of objections as provided for under section 701(e)(2) of the Federal Food, Drug, and Cosmetic Act (the act) (21 U.S.C. 371(e)(2)) as of August 22, 2005. This final rule is newly effective as of July 20, 2006.

FOR FURTHER INFORMATION CONTACT: Aydin Örstan, Center for Food Safety and Applied Nutrition (HFS–255), Food and Drug Administration, 5100 Paint Branch Pkwy., College Park, MD 20740, 301–436–1301.

SUPPLEMENTARY INFORMATION:

I. Introduction

In the July 2005 final rule, FDA amended the color additive regulations to provide for the safe use of mica-based pearlescent pigments prepared from synthetic iron oxide, mica, and titanium dioxide to color ingested drugs. The preamble to the final rule advised that objections to the final rule and requests for a hearing were due by August 22, 2005, and that the rule would be effective on August 23, 2005, except that any provisions may be stayed by the filing of proper objections.

II. Objections and Requests for a Hearing

Sections 701(e)(2) and 721(d) of the act (21 U.S.C. 371(e)(2) and 379e(d)) collectively provide that, within 30 days after publication of an order relating to a color additive regulation, any person adversely affected by such an order may file objections, ''specifying with particularity the provisions of the order deemed objectionable, stating the grounds therefor, and requesting a public hearing upon such objections.'' FDA may deny a hearing request if the objections to the regulation do not raise genuine and substantial issues of fact that can be resolved at a hearing (21 CFR 12.24(b)(1)). (See also *Community Nutrition Institute* v. *Young*, 773 F.2d 1356, 1364 (D.C. Cir. 1985), *cert. denied*, 475 U.S. 1123 (1986).)

Objections and requests for a hearing are governed by part 12 (21 CFR part 12) of FDA's regulations. Under § 12.22(a), each objection must meet the following conditions: (1) Must be submitted on or before the 30th day after the date of publication of the final rule, (2) must be separately numbered, (3) must specify with particularity the provision of the regulation or proposed order objected to, (4) must specifically state the provision of the regulation or proposed order on which a hearing is requested (failure to request a hearing on an objection constitutes a waiver of the right to a hearing on that objection), and (5) must include a detailed description and analysis of the factual information to be presented in support of the objection if a hearing is requested (failure to include a description and analysis for an objection constitutes a waiver of the right to a hearing on that objection).

Following publication of the final rule for the use of mica-based pearlescent pigments to color ingested drugs, FDA received two submissions within the 30-day objection period. One submission objected to the use of pearlescent pigments in food. The submission did not request a hearing.

The second submission objected to the final rule on three grounds: (1) The subject pearlescent pigments would have iron contaminants, (2) these iron contaminants would cause stability issues for active ingredients in drugs, and (3) the use of iron-containing pearlescent pigments to color drugs would limit the availability of medications for those who are monitoring their iron intake. This submission requested a hearing on these issues.

III. Standards for Granting a Hearing

Specific criteria for determining whether to grant or deny a request for a hearing are set out in § 12.24(b). Under that regulation, a hearing will be granted if the material submitted by the requester shows, among other things, that: (1) There is a genuine and substantial factual issue for resolution at a hearing (a hearing will not be granted on issues of policy or law); (2) the factual issue can be resolved by available and specifically identified reliable evidence (a hearing will not be granted on the basis of mere allegations or denials or general descriptions of positions and contentions); (3) the data and information submitted, if established at a hearing, would be adequate to justify resolution of the factual issue in the way sought by the requester (a hearing will be denied if the data and information submitted are insufficient to justify the factual determination urged, even if accurate); (4) resolution of the factual issue in the

way sought by the person is adequate to justify the action requested (a hearing will not be granted on factual issues that are not determinative with respect to the action requested, e.g., if the action would be the same even if the factual issue were resolved in the way sought); (5) the action requested is not inconsistent with any provision in the act or any regulation particularizing statutory standards (the proper procedure in those circumstances is for the person requesting the hearing to petition for an amendment or waiver of the regulation involved); and (6) the requirements in other applicable regulations, e.g., 21 CFR 10.20, 12.21, 12.22, 314.200, 514.200, and 601.7(a), and in the notice issuing the final regulation or the notice of opportunity for a hearing are met.

A party seeking a hearing is required to meet a ''threshold burden of tendering evidence suggesting the need for a hearing'' (*Costle* v. *Pacific Legal Foundation*, 445 U.S. 198, 214–215 (1980), reh. denied, 446 U.S. 947 (1980), citing *Weinberger* v. *Hynson, Westcott & Dunning, Inc.*, 412 U.S. 609, 620–621 (1973)). An allegation that a hearing is necessary to ''sharpen the issues'' or to ''fully develop the facts'' does not meet this test (*Georgia Pacific Corp.* v. *EPA*, 671 F.2d 1235, 1241 (9th Cir. 1982)). If a hearing request fails to identify any factual evidence that would be the subject of a hearing, there is no point in holding one. In judicial proceedings, a court is authorized to issue summary judgment without an evidentiary hearing whenever it finds that there are no genuine issues of material fact in dispute, and a party is entitled to judgment as a matter of law (see Rule 56, Federal Rules of Civil Procedure). The same principle applies to administrative proceedings (see § 12.28).

A hearing request must not only contain evidence, but that evidence should raise a material issue of fact concerning whether a meaningful hearing might be held (*Pineapple Growers Association* v. *FDA*, 673 F.2d 1083, 1085 (9th Cir. 1982)). Where the issues raised in the objection are, even if true, legally insufficient to alter the decision, the agency need not grant a hearing (see *Dyestuffs and Chemicals, Inc.* v. *Flemming*, 271 F.2d 281 (8th Cir. 1959), *cert. denied*, 362 U.S. 911 (1960)). FDA need not grant a hearing in each case where an objector submits additional information or posits a novel interpretation of existing information (see *United States* v. *Consolidated Mines & Smelting Co.*, 455 F.2d 432 (9th Cir. 1971)). In other words, a hearing is justified only if the objections are made in good faith and if they ''draw in question in a material way the underpinnings of the regulation at issue'' (*Pactra Industries* v. *CPSC*, 555 F.2d 677 (9th Cir. 1977)). Finally, courts have uniformly recognized that a hearing need not be held to resolve questions of law or policy (see *Citizens for Allegan County, Inc.* v. *FPC*, 414 F.2d 1125 (D.C. Cir. 1969); *Sun Oil Co.* v. *FPC*, 256 F.2d 233, 240 (5th Cir.), *cert. denied*, 358 U.S. 872 (1958)).

Even if the objections raise material issues of fact, FDA need not grant a hearing if those same issues were adequately raised and considered in an earlier proceeding. Once an issue has been raised and considered, a party is estopped from raising the same issue in a later proceeding without new evidence. The various judicial doctrines dealing with finality can be validly applied to the administrative process. In explaining why these principles ''self-evidently'' ought to apply to an agency proceeding, the U.S. Court of Appeals for the District of Columbia Circuit wrote: ''The underlying concept is as simple as this: Justice requires that a party have a fair chance to present his position. But overall interests of administration do not require or generally contemplate that he will be given more than a fair opportunity.'' *Retail Clerks Union, Local 1401* v. *NLRB*, 463 F.2d 316, 322 (D.C. Cir. 1972). (See also *Costle* v. *Pacific Legal Foundation*, supra at 215–220; *Pacific Seafarers, Inc.* v. *Pacific Far East Line, Inc.*, 404 F.2d 804 (D.C. Cir. 1968), *cert. denied*, 393 U.S. 1093 (1969).)

In summary, a hearing request must present sufficient credible evidence to raise a material issue of fact, and the evidence must be adequate to resolve the issue as requested and to justify the action requested.

One of the objections to the final rule on mica-based pearlescent pigments did not request a hearing. Therefore, FDA will rule upon the objection under §§ 12.24 through 12.28 (as cited in § 12.30(b)).

IV. Analysis of Objections

FDA addresses each of the two submissions in the following paragraphs, as well as the evidence and information filed in support of each, comparing each submission and the information submitted in support of it to the standards for ruling on objections and granting a hearing in § 12.24.

The first submission objected to the use of pearlescent pigments in food. This submission did not request a hearing. FDA notes that the final rule that is the subject of the objection provides for the safe use of mica-based pearlescent pigments to color ingested drugs, not foods. The objection to the use of pearlescent pigments in food is outside the scope of the July 2005 final rule. Therefore, FDA is denying this objection.

The second submission asserted that the subject pearlescent pigments would be contaminated with iron salts and that these contaminants would cause stability issues for active ingredients in drugs that could interfere with drug efficacy. The submission also asserted that the iron contaminants would increase exposure to iron. Furthermore, the submission was concerned that the use of iron-containing pearlescent pigments to color drugs would limit the availability of medications for those who are monitoring their iron intake. This submission requested a hearing on these issues.

Although this submission claimed that the subject pearlescent pigments would be contaminated with iron salts, the submission did not provide any factual information to support this claim. The July 2005 final rule was in response to a color additive petition (CAP 8C0257) that FDA had received from the manufacturer of the subject pearlescent pigments. During its review of the petition, FDA determined what specifications would be necessary to ensure the safe use of pearlescent pigments in ingested drugs and incorporated these specifications in the new § 73.1128 (21 CFR 73.1128). FDA also reviewed the results of analyses of several batches of pearlescent pigments and determined that they complied with the specifications in the new regulation. In the preamble to the final rule, FDA discussed the manufacturing process of the subject pearlescent pigments. FDA noted that the starting materials for these pigments included soluble iron salts and that the manufacturing incorporated a heating (calcination) step at temperatures up to 900 °C. FDA also noted that during calcination, the starting iron salts are converted into iron oxide.

The submission also asserted that the iron contaminants would destabilize active ingredients in drugs, which would affect drug efficacy. As noted previously in this document, the submission did not provide any factual information to support the claim that the subject pearlescent pigments would contain iron contaminants.

The third assertion in the submission was that the iron oxide in the subject pearlescent pigments is ''expected to limit availability of medications for the persons who must monitor iron intake.'' However, the submission did not provide any factual information to support this claim. FDA notes that, as

indicated in the preamble to the July 2005 final rule, the bioavailability of these pigments and/or their individual components when ingested is expected to be low.

This submission did not provide any factual information to modify FDA's conclusion that the subject pearlescent pigments present no toxic potential when ingested at levels estimated by the agency, based on their proposed use in coloring ingested drugs. Namely, this submission did not provide specifically identified reliable evidence that can lead to resolution of a factual issue in dispute (§ 12.24(b)(2)). A hearing will not be granted on the basis of mere allegations or denials or general descriptions of positions and contentions (§ 12.24(b)(2)). Therefore, FDA is denying this objection.

V. Summary and Conclusions

The agency is denying the objections to the final rule in the two submissions received on the following bases. The objection to the use of pearlescent pigments in food is outside the scope of the July 2005 final rule, which amended the color additive regulations to provide for the safe use of mica-based pearlescent pigments to color ingested drugs. The objections in the second submission that the subject pearlescent pigments would contain iron contaminants, that the iron contaminants would cause stability issues for active ingredients in drugs, and that the use of the pigments to color ingested drugs will limit availability of medications for the persons who must monitor their iron intake, are not supported by any factual information.

The filing of the objections served to stay automatically the effectiveness of § 73.1128. Section 701(e)(2) of the act states: ''Until final action upon such objections is taken by the Secretary * * *, the filing of such objections shall operate to stay the effectiveness of those provisions of the order to which the objections are made.'' Section 701(e)(3) of the act further stipulates that ''As soon as practicable * * *, the Secretary shall by order act upon such objections and make such order public.''

The agency has completed its evaluation of the objections and concludes that a continuation of the stay of this regulation is not warranted.

In the absence of any other objections and requests for a hearing, the agency, therefore, further concludes that this document constitutes final action on the objections received in response to the regulation as prescribed in section 701(e)(2) of the act. Therefore, the agency is acting to end the stay of the regulation by establishing a new effective date of July 20, 2006 for this regulation listing mica-based pearlescent pigments prepared from synthetic iron oxide, mica, and titanium dioxide to color ingested drugs. As announced in the July 22, 2005, final rule, the previous effective date of the regulation was August 23, 2005.

Therefore, under sections 701 and 721 of the act, notice is given that the objections filed in response to the July 2005 final rule do not form the basis for further stay of this final rule or require amendment of the regulations. Accordingly, the stay of § 73.1128 that FDA is announcing in this document is removed effective July 20, 2006.

List of Subjects in 21 CFR Part 73

Color additives, Cosmetics, Drugs, Medical devices.

■ Therefore, under the Federal Food, Drug, and Cosmetic Act (21 U.S.C. 321, 341, 342, 343, 348, 351, 352, 355, 361, 362, 371, 379e) and under authority delegated to the Commissioner of Food and Drugs (section 1410.10 of the FDA Staff Manual Guide), notice is given that objections and a request for a hearing were filed in response to the July 22, 2005, final rule. Notice is also given that the agency is denying these objections. Accordingly, the amendments issued thereby are effective July 20, 2006.

Dated: July 14, 2006.

Jeffrey Shuren,

Assistant Commissioner for Policy.

[FR Doc. E6–11536 Filed 7–19–06; 8:45 am]

BILLING CODE 4160–01–S

DEPARTMENT OF LABOR

Occupational Safety and Health Administration

29 CFR Parts 1926 and 1928

[Docket No. S–270–A]

RIN 1218–AC15

Roll-Over Protective Structures

AGENCY: Occupational Safety and Health Administration (OSHA), Labor.

ACTION: Final rule; corrections and technical amendments.

SUMMARY: On December 29, 2005, OSHA published a direct final rule in the **Federal Register** reinstating its original construction and agriculture standards that regulate the testing of roll-over protective structures (''ROPS'') used to protect employees who operate wheel-type tractors. OSHA received one comment to the direct final rule; this comment recommended a number of clarifications to the original ROPS standards published in the direct final rule. In the present notice, the Agency is making corrections and technical amendments to the ROPS standards in response to this comment, as a result of editorial errors found in the ROPS standards published in the direct final rule, and to improve consistency among the figures generated for these standards. The Agency finds that these corrections and technical amendments do not change the substantive requirements of the ROPS standards.

DATES: The corrections and technical amendments specified by this rulemaking become effective on July 20, 2006.

FOR FURTHER INFORMATION CONTACT:

Press inquiries: Kevin Ropp, OSHA Office of Communications, Room N–3647, U.S. Department of Labor, 200 Constitution Avenue, NW., Washington, DC 20210; telephone: (202) 693–1999.

General and technical information: Matthew Chibbaro, Acting Director, Office of Safety Systems, Directorate of Standards and Guidance, Occupational Safety and Health Administration, U.S. Department of Labor, Room N–3609, 200 Constitution Avenue, NW., Washington, DC 20210; telephone (202) 693–2255.

SUPPLEMENTARY INFORMATION: On December 29, 2005, OSHA published a direct final rule in the **Federal Register** reinstating its original construction and agriculture standards that regulate the testing of roll-over protective structures (''ROPS'') used to protect employees who operate wheel-type tractors (see 70 FR 76979). The Agency received only one public comment (Ex. 3–1) on the direct final rule, which it determined was not a significant adverse comment. The commenter recommended several clarifications to the ROPS standards published in the direct final rule.

The table below describes the clarifications recommended by the commenter who responded to the direct final rule, and OSHA's response to these recommendations. This response provides the Agency's rationale for accepting a recommendation or excluding it from further consideration. Accordingly, OSHA is making a number of corrections and technical amendments to the ROPS standards for construction (§ 1926.1002) and agriculture (§§ 1928.52 and 1928.53) based on the commenter's recommendations.

Recommendation	OSHA's response
Figure W–15: • 05T needs to be 0.5T and 09T needs to be 0.9T • (50 DEG ± 5 DEG) (1270 plus/minus 127 mm) needs to be (50 inches plus/minus 5 inches) (1270 plus/minus 127 mm). • Path of travel should also state center of tractor	OSHA added the decimal points as recommended. However, instead of revising ''DEG'' to ''INCHES,'' OSHA is replacing the entire caption with ''45 in. min. (1143 mm)'' to make this figure consistent with Figure C–10. Regarding the third recommendation, OSHA is adding a caption to the figure indicating the center of the tractor on the path of travel. For consistency, OSHA added this caption as well to Figure C–10. However, this caption applies only to the linear center of the tractor, which does not necessarily represent the tractor's center of gravity.
Figure W–16: Under 1926.1002(i)(1)(i), Dimension D equals 2 inches (51 mm) inside of the frame upright to the vertical centerline of the seat. However, because Dimension G is 24 inches (610 mm), Dimension D should be 12 inches (305 mm).	OSHA is not making a change in response to this comment. Dimension D represents the minimum deflection from the true horizontal permitted during side-load testing, which must be at least 2 inches (51 mm). Dimension G is the minimum design limit for the width of a ROPS (i.e., the ROPS must have a width of at least 24 inches). Therefore, the dimensions in Figure W–16 are correct.
Figure W–17: Under 1926.1002(i)(1)(i), Dimension F equals not less than 0 inches (0 mm) and not more than 12 inches (305 mm) measured at the centerline of the seat backrest to the crossbar along the line of load application. Clarify whether the distance between the seat backrest and the frame cannot be more than 12 inches after impact.	OSHA is not making a change in response to this comment. Dimension F represents two values: 12 inches is the pre-load design dimension and 0 is the maximum deflection permitted during rear-load testing (i.e., the distance between the two lines circumscribed by Dimension F can be no greater than 12 inches during testing). Therefore, the dimensions in Figure W–17 are correct and clear.
Figure W–18: Figure W–18 does not have any dimension specifications or an explanation of what it is and what it does.	OSHA is not making a change in response to this comment. The figure legend states that the figure represents a method for measuring instantaneous deflection, which is explained in § 1926.1002(g)(1)(ii) and (g)(2)(v).
Figure W–19: • 08L_{max} needs to be 0.8$L_{max.}$ • Load L, lb (kg) – Define as L = static load, lb (kg) • Deflection D, in. (mm) – Define as D = deflection under L, in. (mm)	OSHA added the decimal point as recommended. However, OSHA is not revising ''Load L, lb (kg)'' or ''Deflection D, in. (mm)'' because these terms are defined in the regulatory text at § 1926.1002(j)(3).
Figure W–20: • EU = OQD/12 ft-lb – Add an explanation that dividing by 12 converts [to] in-lb. • Load L, lb (kg) – Define L = static load, lb (kg) • Deflection D, in. (mm) – Define D = deflection under L, in. (mm)	OSHA is not making a change in response to this comment. OSHA does not believe it is necessary to specifically explain that dividing by 12 converts ft-lbs to in-lbs. See OSHA's response above for Figure W–19 regarding the comment on defining ''Load L, lb (kg)'' and ''Deflection D, in. (mm).''
Figure W–21: Add the weight of the pendulum (4,410 lbs (2,000 kg)) and the height of the pendulum (18–22 ft (5.5–6.7 m)) on the drawing.	OSHA is not making a change in response to this comment because the information in the figure is provided in § 1926.1002(h)(1)(ii).
Figure W–24: • Correct the first notation to read: H = 4.92 + 0.00190 W or H′ = 125 + 0.107 W′. • Correct the second notation to read: W = tractor weight as specified by 29 CFR 1926.1002(e)(1) and (e)(3), in lb. (W′, kg).	OSHA is adding the decimal points in the notation ''H = 4.92 + 0.00190W or H′ = 125 + 0.107W′,'' as well as correcting the second notation to read ''W = tractor weight as specified by 29 CFR 1926.1002(e)(1) and (e)(3) in pounds (W′ in kg).''
Figures C–2, C–3, C–8, C–9, C–13, C–14, C–15, C–16: Define SRP as ''Seat Reference Point.''	OSHA is not making a change in response to this comment. Both 1928.52(d)(iv) and 1928.53(d)(iv) define this term, and OSHA believes these definitions are sufficient.
Figure C–4: This drawing does not have any dimension specifications or an explanation of what it is and what it does.	See OSHA's response above for Figure W–18. In this case, the method is explained in §§ 1928.52(d)(3)(i)(E) and 1928.53(d)(3)(i)(E).
Figure C–5: • Load L, lb (kg) – Define as L = static load, lb (kg) • Deflection D, in. (mm) – Define as D = deflection under L, in. (mm)	See OSHA's response above for Figure W–19. In this case, the terms are defined in §§ 1928(d)(2)(ii) and 1928(d)(2)(ii).
Figure C–6: Add the weight of the pendulum (4,410 lbs (2,000 kg)) and the height of the pendulum (18–22 ft (5.5–6.7 m)) on the drawing.	See OSHA's response above for Figure W–21. In this case, the information is provided in §§ 1928.52(d)(3)(i)(B) and 1928.53(d)(3)(i)(B).

Recommendation	OSHA's response
Figure C–7: • The second notation should read: W = tractor weight (see 29 CFR 1928.51(a) in lb. (W′, kg). • Clarify whether impact energy is in ft-lbs × 1000 instead of lb × 1000	OSHA is substituting Figure W–24 for this figure, but is correcting the notation in the new figure to read "W = tractor weight as specified by 29 CFR 1928.51(a) in pounds (W′ in kg)." This correction clarifies that impact energy is in ft-lbs.
29 CFR 1928.53(d)(2)(ii): Revise the notation to read W = Tractor weight (see 29 CFR 1928.51(a)) in lb (W′ in kg).	OSHA is revising this notation as recommended.

Other corrections and technical amendments. In addition to the revisions described in the table above, OSHA carefully reviewed the direct final rule and found that several additional corrections should be made to the original ROPS standards published in the direct final rule. In this regard, the Agency is making the following two corrections to § 1926.1002(h)(1)(v): Correcting the typographical error in the first sentence from "f" to "of"; and, in the second sentence, correcting the reference to Figure W–23 to "Figure W–18."

A number of figures appear in the original ROPS standards. These figures are: W–14 through W–24 of § 1926.1002; W–25 through W–28 of § 1926.1003; C–1 through C–11 of § 1928.52; and C–12 through C–16 of § 1928.53. After publishing the direct final rule for ROPS in the **Federal Register** (70 FR 76979), the Agency reproduced the figures in these ROPS standards using state-of-the-art computer-design technology to obtain images that are clearer and more comprehensible than the images used in the direct final rule. Therefore, OSHA is replacing the figures published in the direct final rule with these newly generated figures.

In the process of generating the new figures, the Agency made stylistic, editorial, and technical corrections to them. The following table describes the technical corrections made to the figures.

Figures	Correction
W–15	Added the same legend as the legend to Figure C–10; added the caption "CENTER OF TRACTOR" as in Figure C–10.
C–4	Replaced the legend with the legend to Figure W–18.
C–5	Substituted Figure W–19 for this figure.
C–6	Added the phrase "PIN MARKING POSITION OF" to the caption "CENTER OF GRAVITY" as in Figure W–21.
C–7	Substituted Figure W–24 for this figure.
C–8, C–15, and W–22	Revised the caption addressing the beam under the tractor to read, "BEAM CLAMPED IN FRONT OF BOTH REAR WHEELS AFTER ANCHORING, 6 IN. (15 CM) SQUARE."
C–10	Added the captions "PATH OF TRAVEL" and "RAMP" as in Figure W–15; added the phrase "TEST TRACTOR" to the caption "REAR WHEEL TREAD" as in Figure W–15.

Exemption from notice and comment procedures. OSHA has determined that the corrections and technical amendments made by this rulemaking are not subject to the procedures for public notice-and-comment rulemaking specified under Section 4 of the Administrative Procedure Act (5 U.S.C. 553), or Section 6(b) of the Occupational Safety and Health Act of 1970 (29 U.S.C. 655(b)), because these corrections and technical amendments do not affect the substantive requirements or coverage of the ROPS standards for the construction and agriculture industries. This rulemaking does not modify or revoke existing rights and obligations, and new rights and obligations have not been established by this rulemaking. Under this rulemaking, the Agency is merely correcting or clarifying the existing regulatory requirements of the ROPS standards. Therefore, OSHA finds that public notice-and-comment procedures are unnecessary within the meaning of 5 U.S.C. 553(b)(3)(B) and § 1911.5.

List of Subjects

29 CFR Part 1926

Construction industry, Motor vehicle safety, Occupational safety and health.

29 CFR Part 1928

Agriculture, Motor vehicle safety, Occupational safety and health.

Authority and Signature

This document was prepared under the direction of Edwin G. Foulke, Jr., Assistant Secretary of Labor for Occupational Safety and Health, U.S. Department of Labor, 200 Constitution Avenue, NW., Washington, DC 20210. The Agency is issuing this notice under the following authorities: Sections 4, 6, and 8 of the Occupational Safety and Health Act of 1970 (29 U.S.C. 653, 655, 657); Section 3704 of the Contract Work Hours and Safety Standards Act (40 U.S.C. 3701 *et seq.*); Secretary of Labor's Order 5–2002 (67 FR 65008); and 29 CFR part 1911.

Signed at Washington, DC on July 12, 2006.

Edwin G. Foulke, Jr.,

Assistant Secretary of Labor.

Amended Standards

■ Based on the explanations provided by the preamble to this document, OSHA is amending 29 CFR parts 1926 and 1928 as follows:

PART 1926—[AMENDED]

Subpart W—[Amended]

■ 1. The authority citation for subpart W of part 1926 continues to read as follows:

Authority: Section 3704 of the Contract Work Hours and Safety Standards Act (40 U.S.C. 3701); Sections 4, 6, and 8 of the Occupational Safety and Health Act of 1970 (29 U.S.C. 653, 655, 657); and Secretary of Labor's Order No. 12–71 (36 FR 8754), 8–76 (41 FR 25059), 9–83 (48 FR 35736), 1–90 (55 FR 9033), 6–96 (62 FR 111), 3–2000 (65 FR 50017), or 5–2002 (67 FR 65008), as applicable.

■ 2. Revise paragraph (h)(1)(v) of § 1926.1002 to read as follows:

§ 1926.1002 Protective frames (roll-over protective structures, known as ROPS) for wheel-type agricultural and industrial tractors used in construction.

* * * * *

(h) * * *

(1) * * *

(v) Means shall be provided for indicating the maximum instantaneous deflection along the line of impact. A simple friction device is illustrated in Figure W–18.

* * * * *

■ 3. In Appendix A to subpart W, remove existing Figures W–14 through W–28 and add in their place new Figures W–14 through W–28. [insert figures W–14 through W–28]

* * * * *

PART 1928—[AMENDED]

Subpart C—[Amended]

■ 4. The authority citation to part 1928 continues to read as follows:

BILLING CODE 4510–26–P

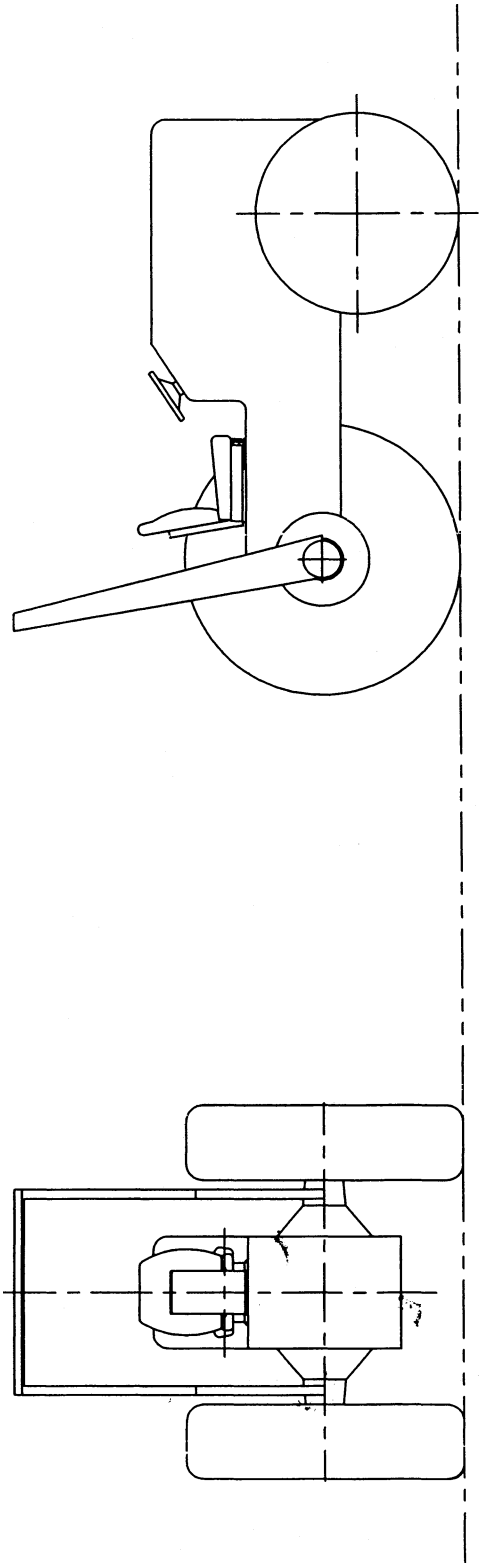

FIGURE W-14 - TYPICAL FRAME CONFIGURATION.

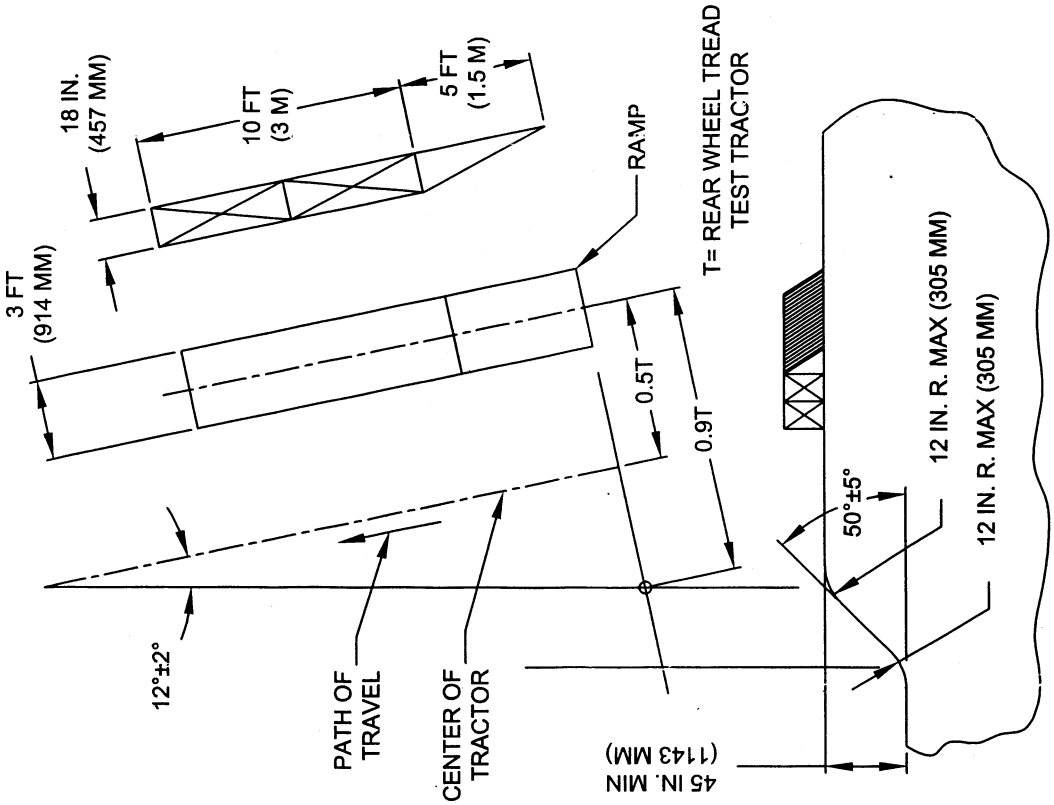

FIGURE W-15 - SIDE OVERTURN BANK AND RAMP.

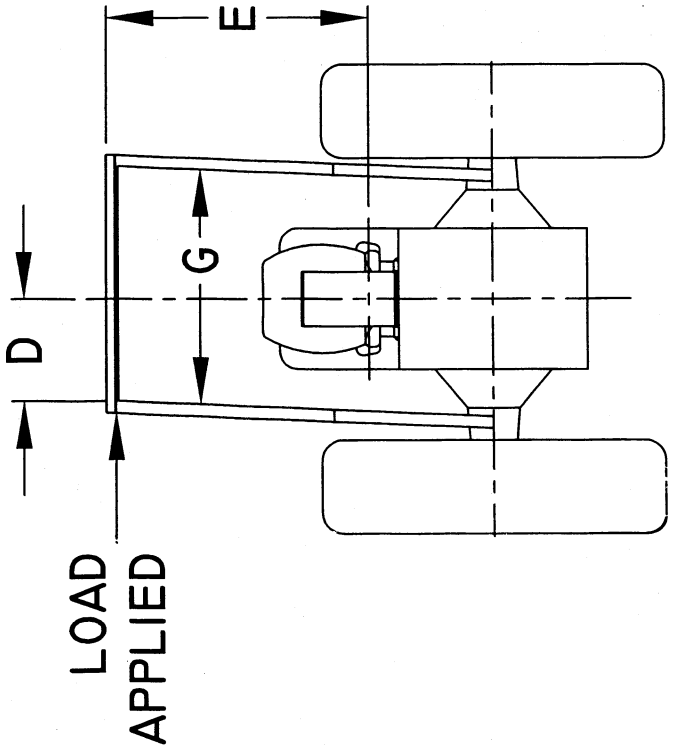

FIGURE W-16 - SIDE LOAD APPLICATION.

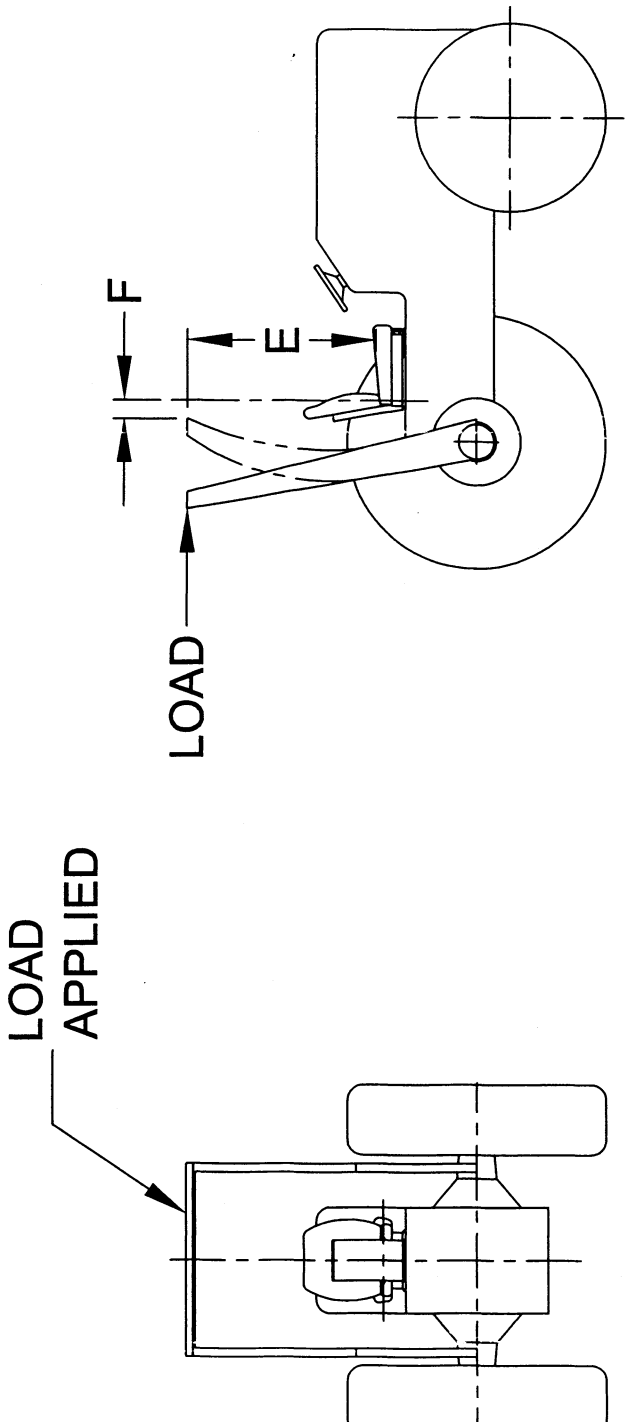

FIGURE W-17 - REAR LOAD APPLICATION.

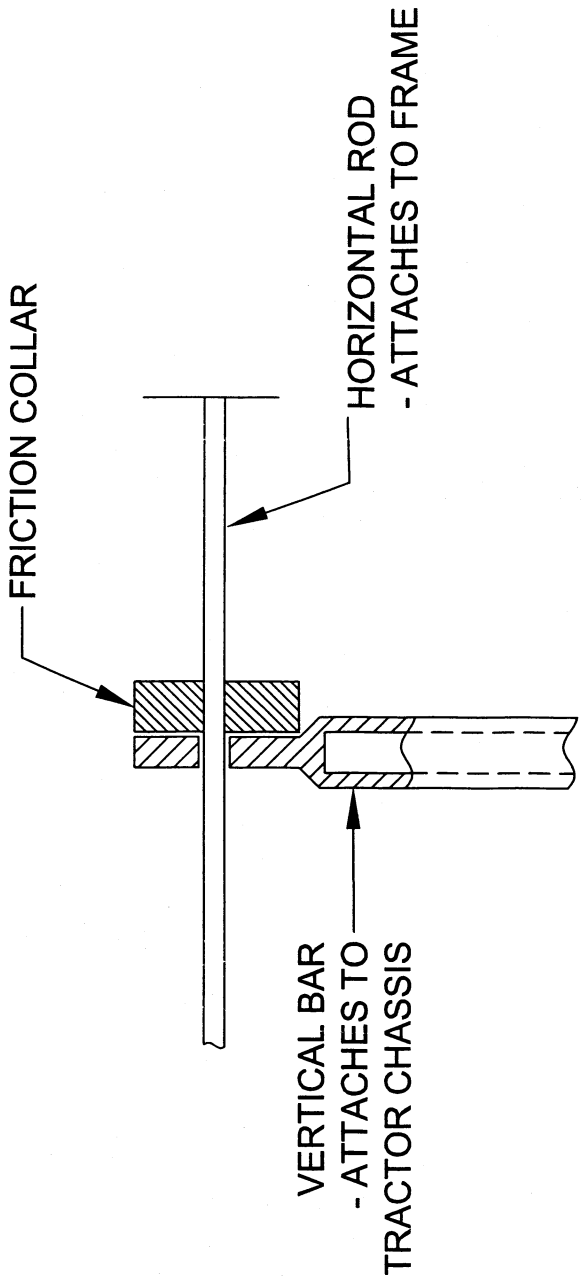

FIGURE W-18 - METHOD OF MEASURING INSTANTANEOUS DEFLECTION.

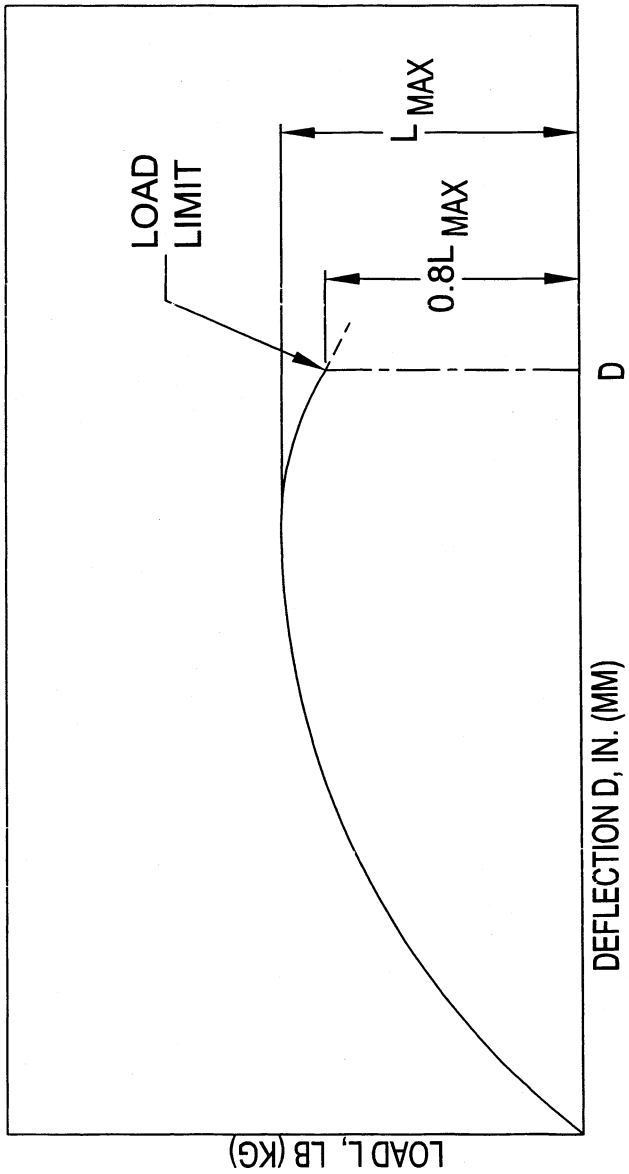

FIGURE W-19 - TYPICAL L-D DIAGRAM.

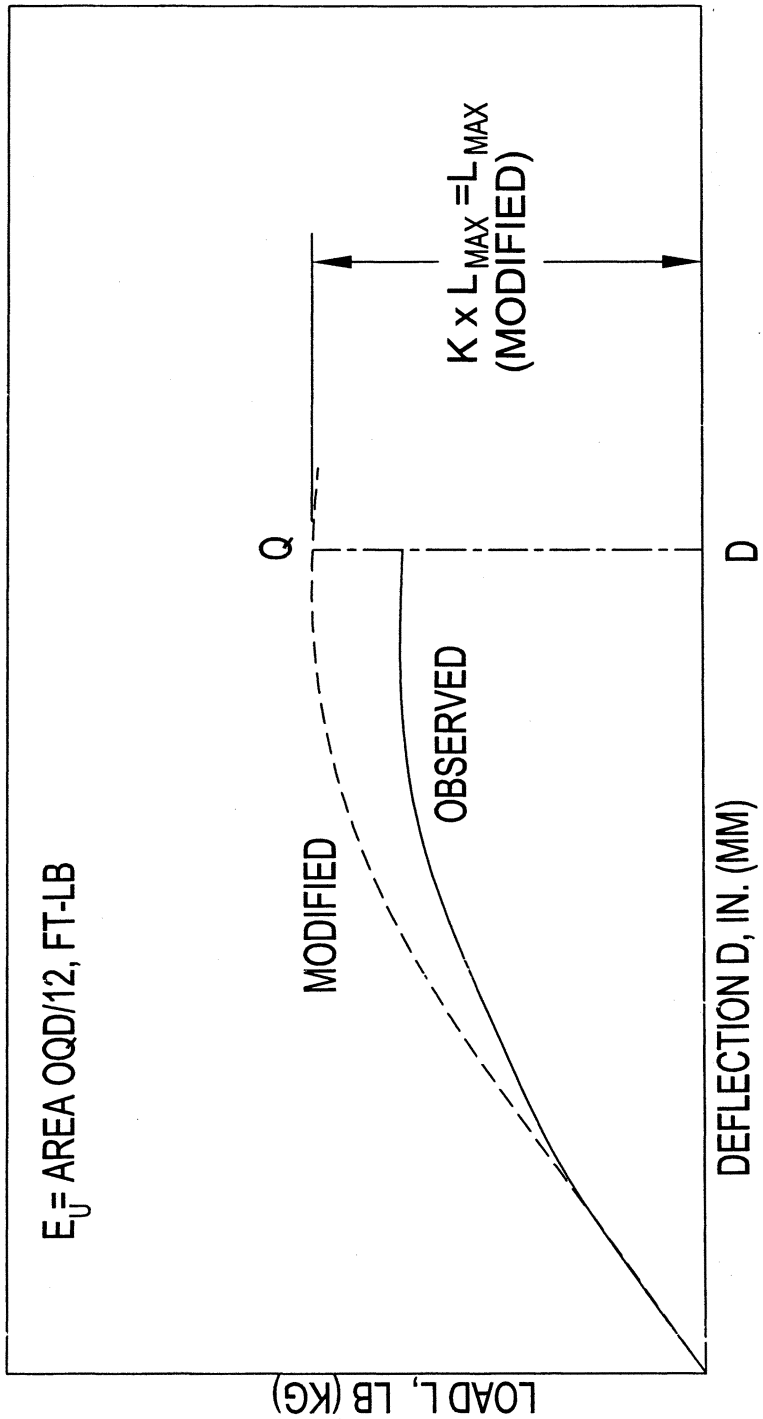

FIGURE W-20 - TYPICAL MODIFIED L_M-D_M DIAGRAM.

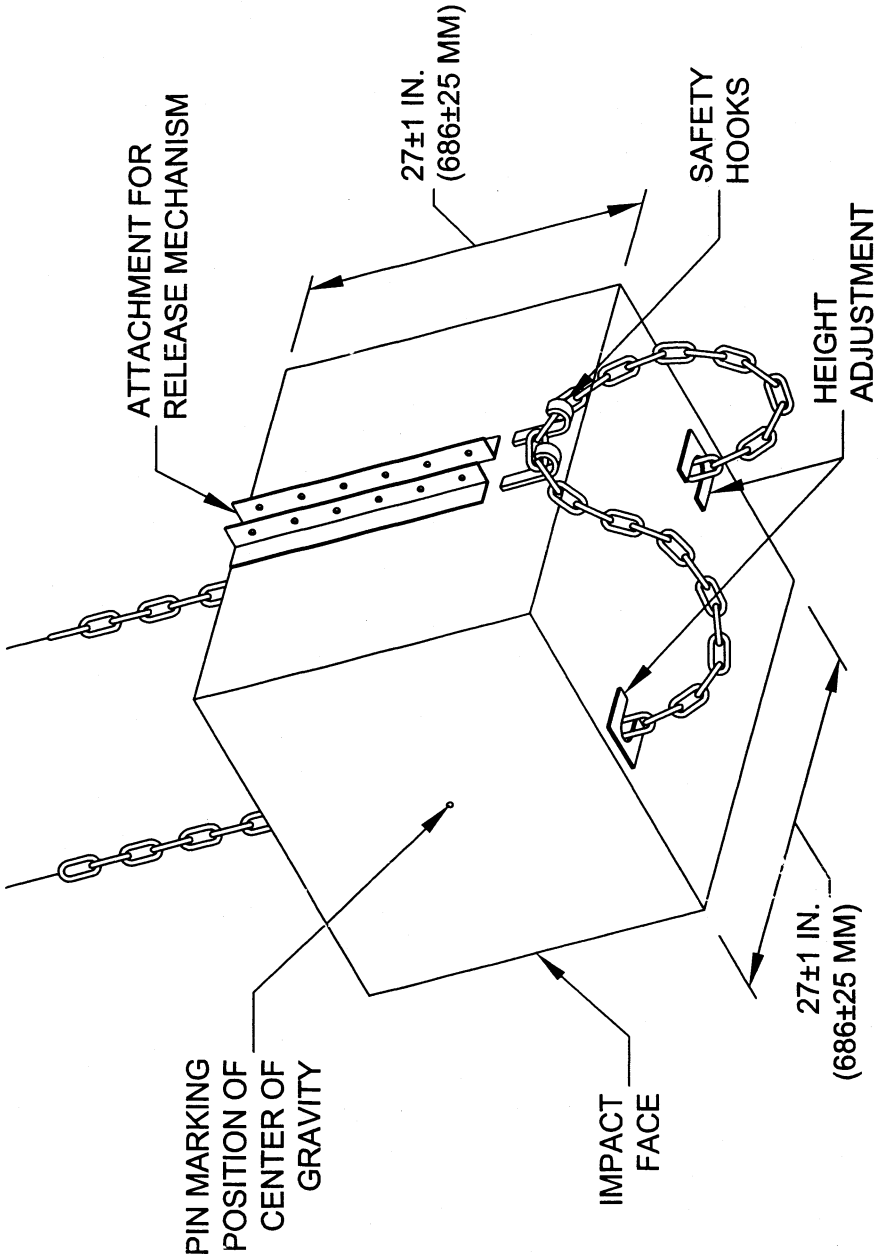

FIGURE W-21 - PENDULUM.

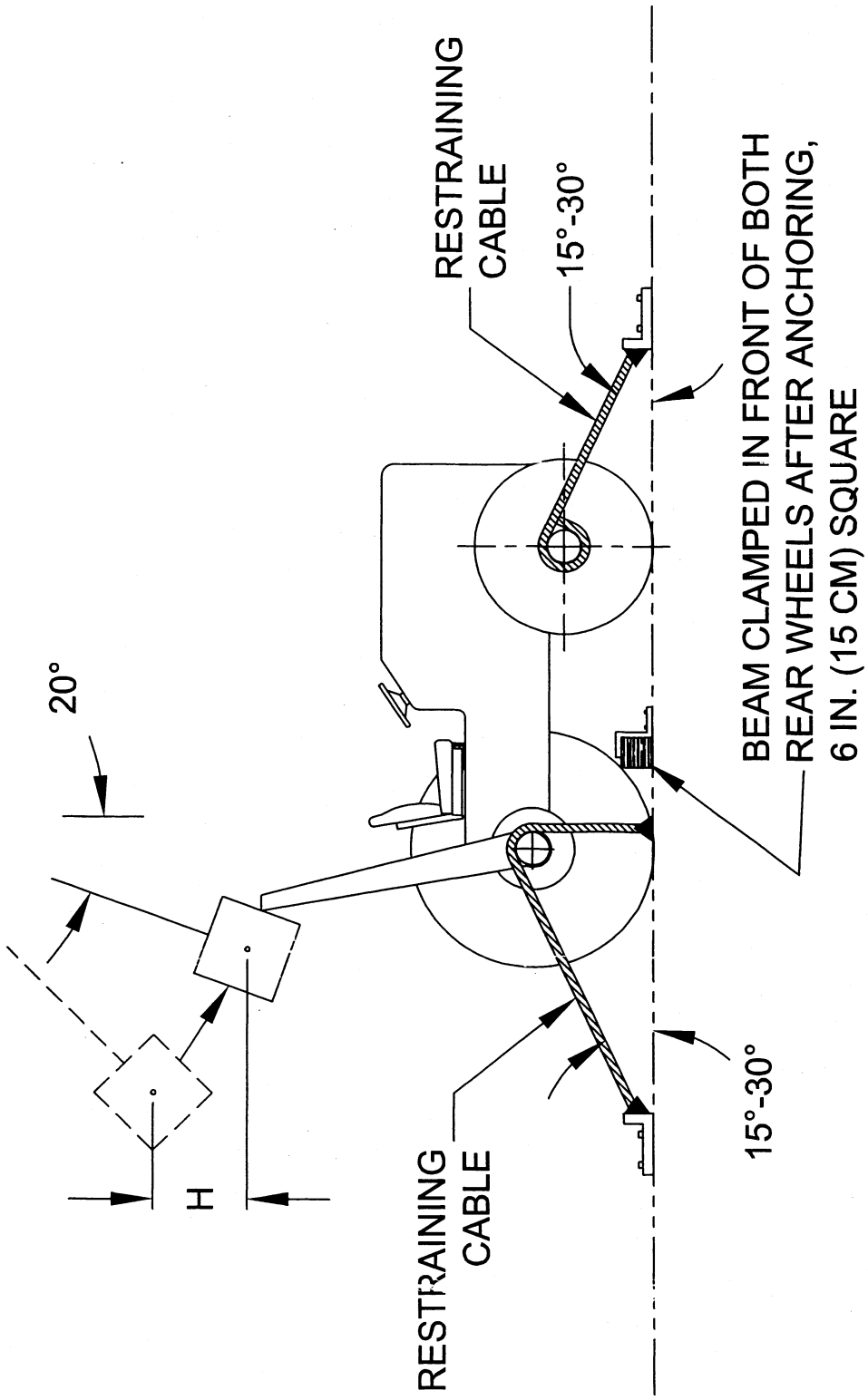

FIGURE W-22 - METHOD OF IMPACT FROM REAR.

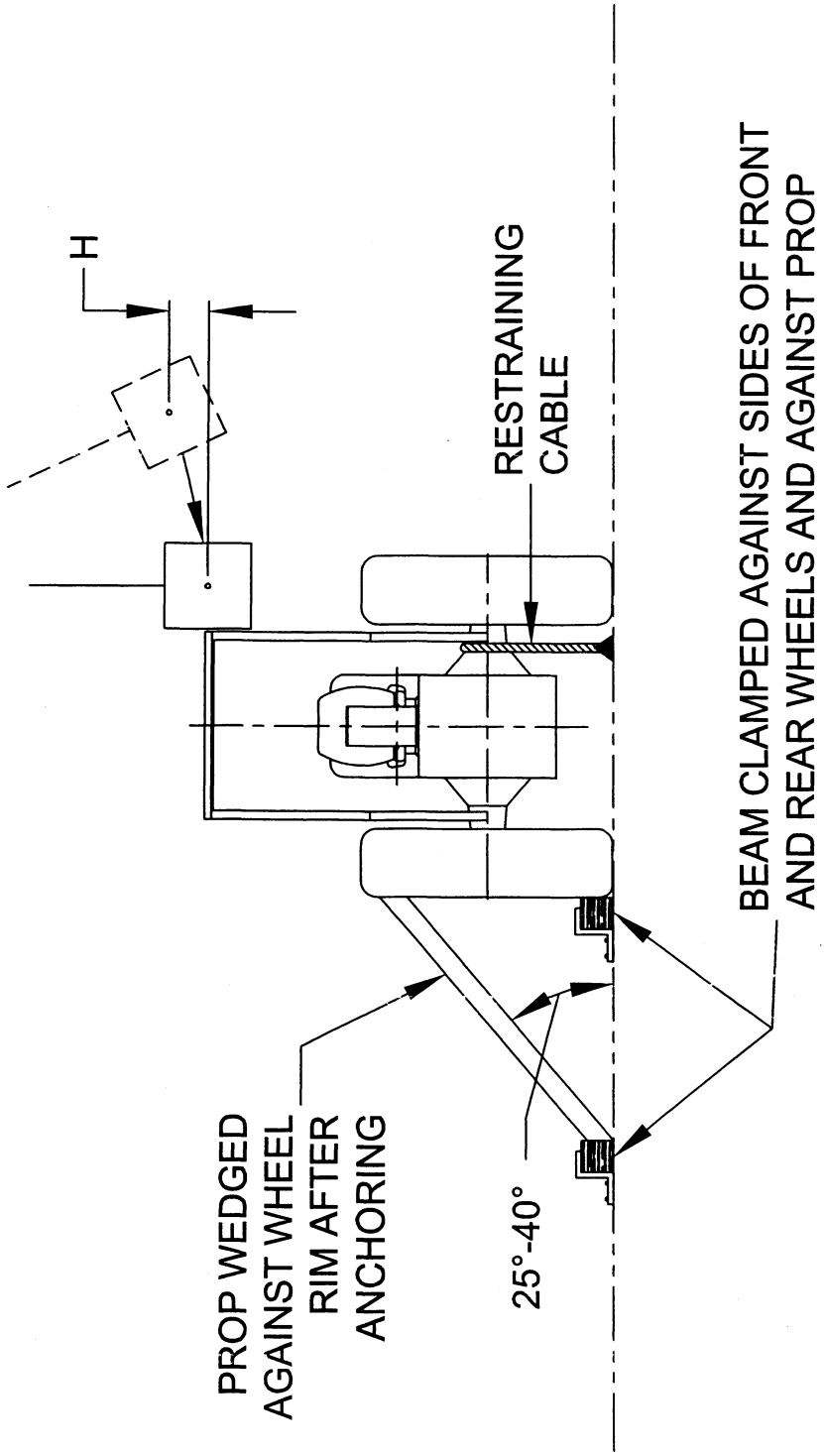

FIGURE W-23 - METHOD OF IMPACT FROM SIDE.

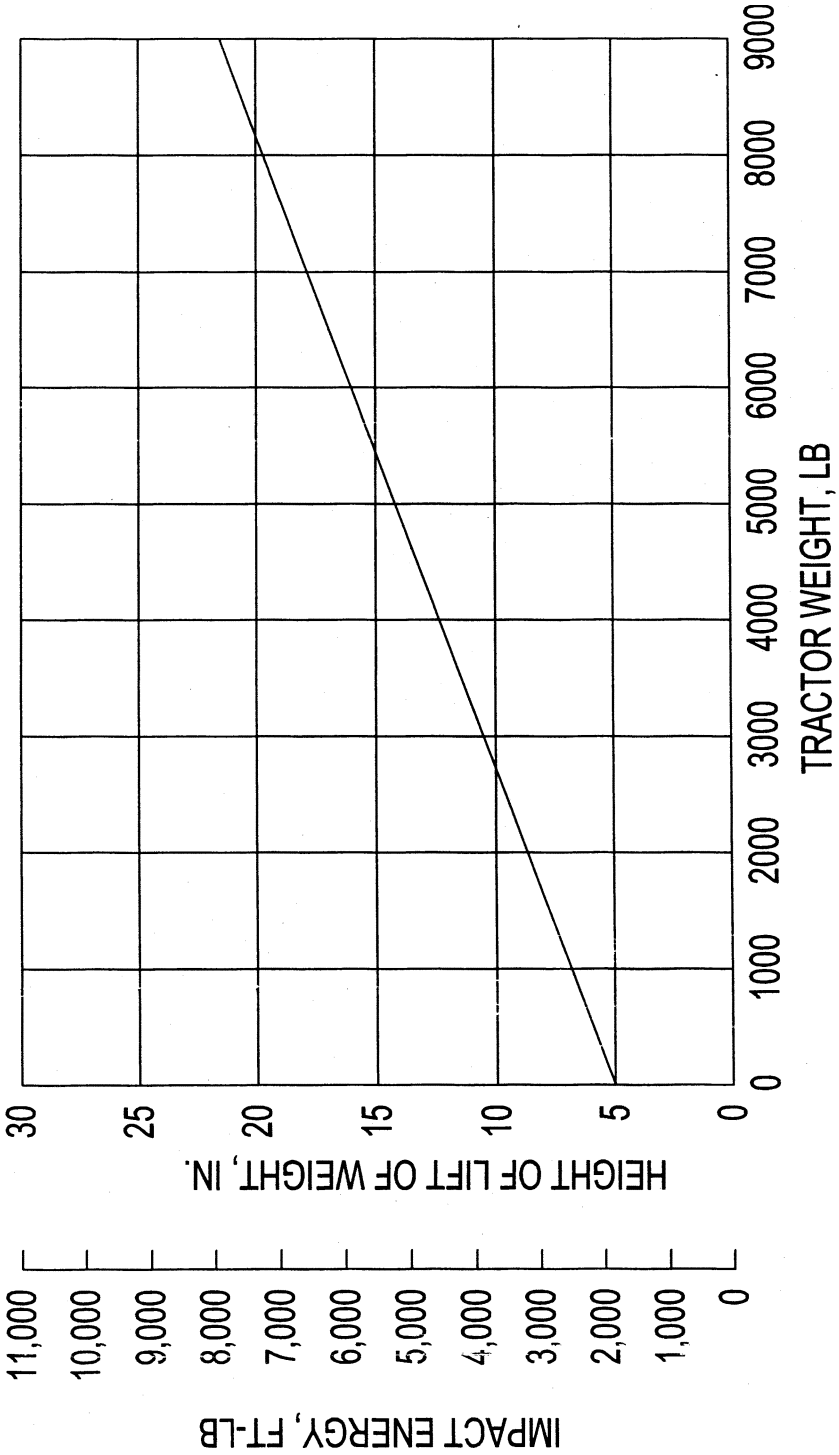

NOTATION OF FORMULAE
H=4.92+0.00190W or H'=125+0.107W'
W=tractor weight specified by 29 CFR 1926.1002(e)(1) and (e)(3) in lbs (W' in kg).

FIGURE W-24 - IMPACT ENERGY AND CORRESPONDING LIFT HEIGHT OF 4,410 lb (2,000 kg) WEIGHT.

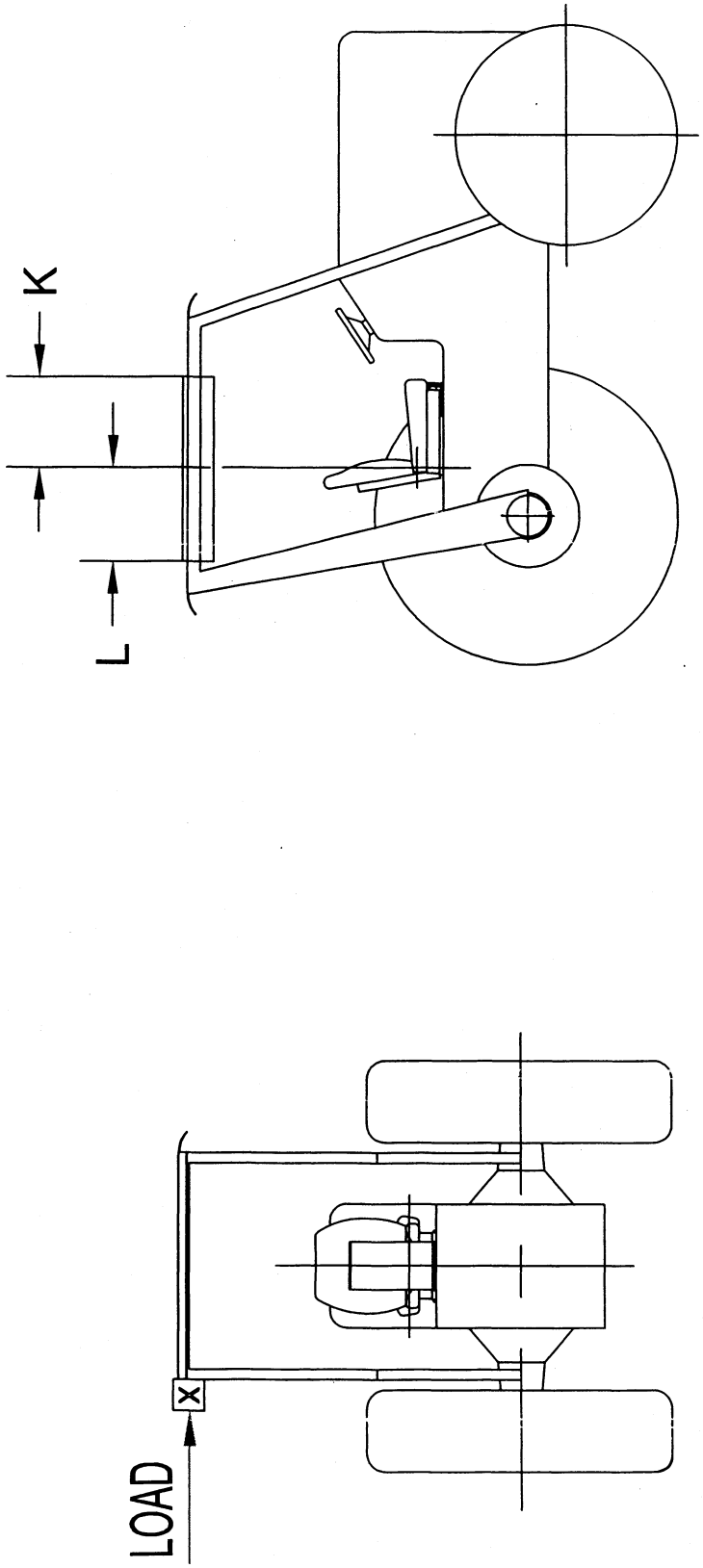

FIGURE W-25 - LOCATION OF SIDE LOAD.

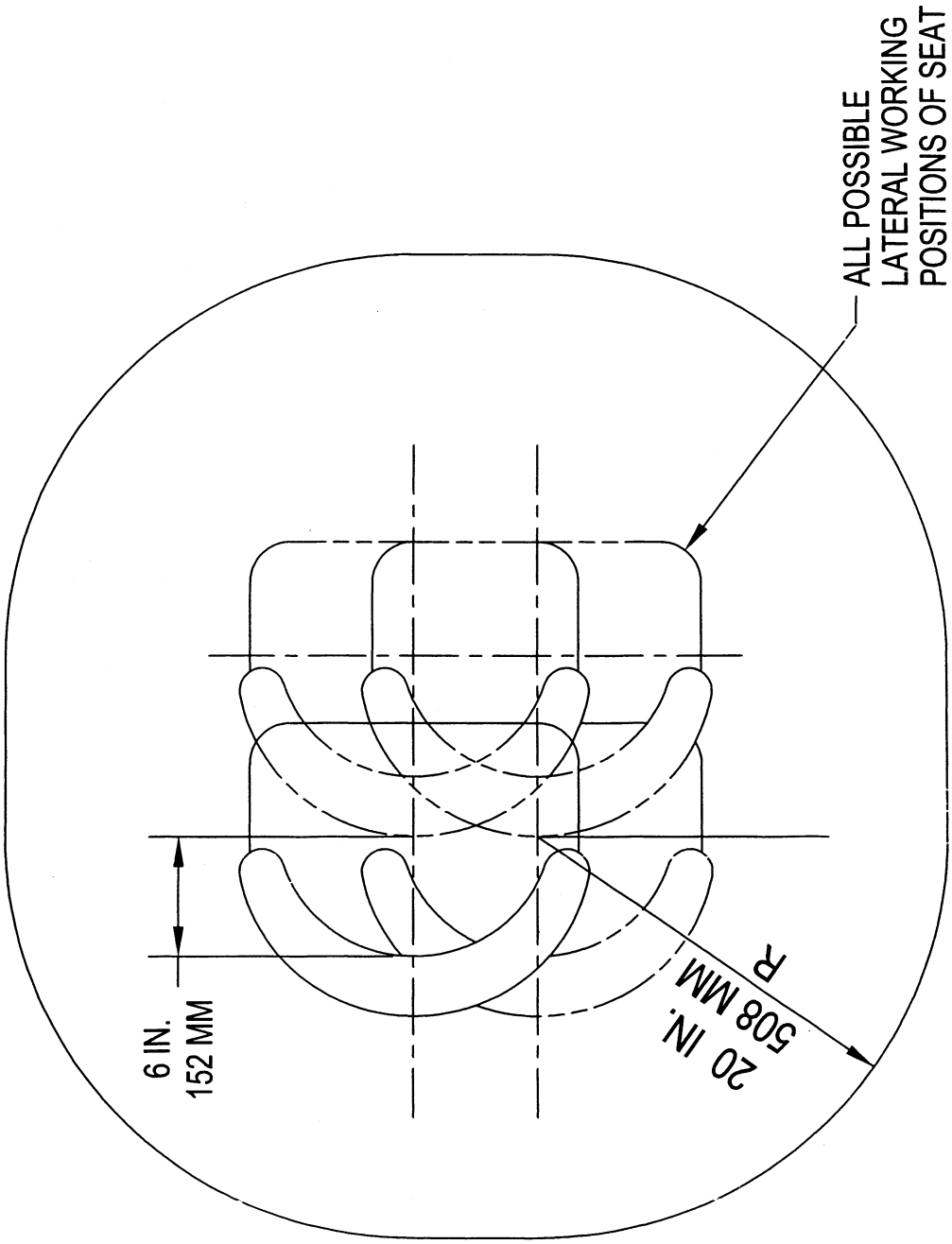

FIGURE W-26 - ZONE OF PROTECTION FOR DROP TEST.

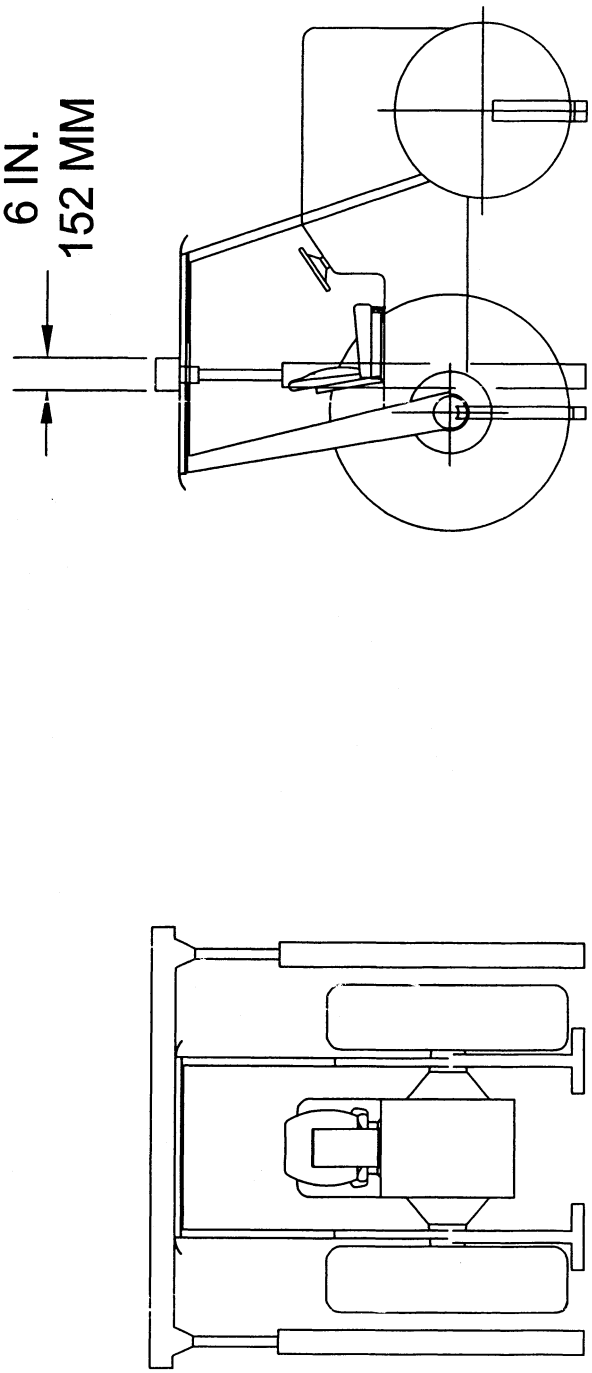

FIGURE W-27 - METHOD OF LOAD APPLICATION FOR CRUSH TEST.

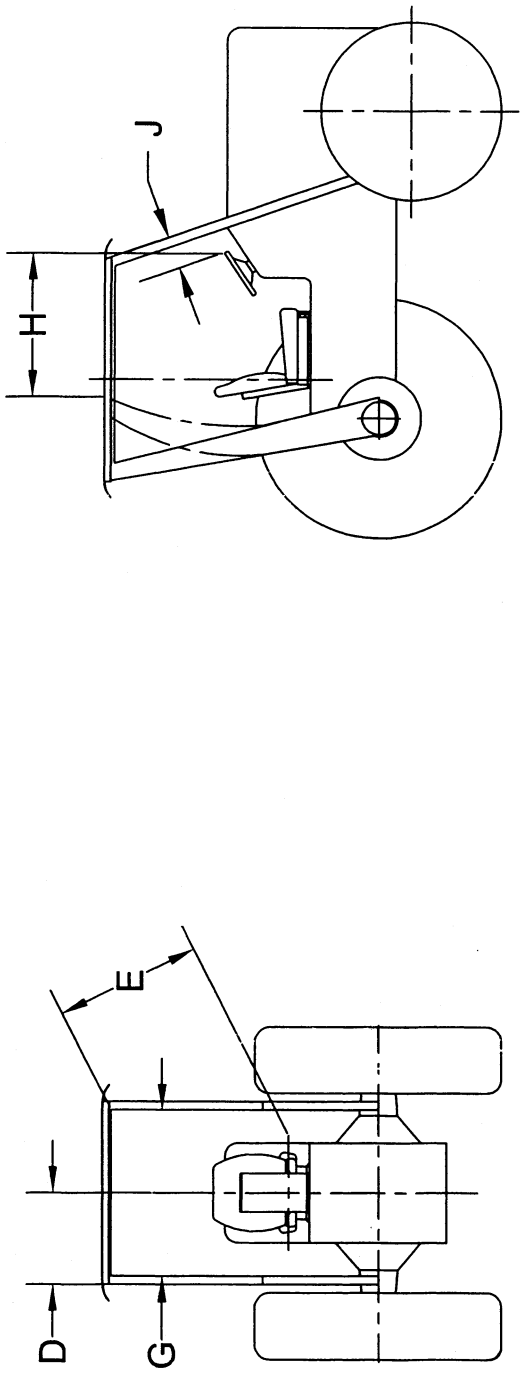

FIGURE W-28 - PROTECTED ZONE DURING CRUSH AND DROP TEST.

BILLING CODE 4510–26–C

Authority: Sections 4, 6, and 8 of the Occupational Safety and Health Act of 1970 (29 U.S.C. 653, 655, 657); and Secretary of Labor's Order No. 12–71 (36 FR 8754), 8–76 (41 FR 25059), 9–83 (48 FR 35736), 1–90 (55 FR 9033), 6–96 (62 FR 111), 3–2000 (65 FR 50017) or 5–2002 (67 FR 65008) as applicable; and 29 CFR part 1911.

Section 1928.21 also issued under Section 29, Hazardous Materials Transportation Uniform Safety Act of 1990 (Pub. L. 101–615, 104 Stat. 3244 (49 U.S.C. 1801–1819 and 5 U.S.C. 553)).

■ 5. Revise paragraph (d)(2)(ii) of § 1928.53 to read as follows:

§ 1928.53 Protective enclosures for wheel-type agricultural tractors—test procedures and performance requirements.

* * * * *

(d) * * *

(2) * * *

(ii) The following definitions shall apply:

W = Tractor weight (see 29 CFR 1928.51(a)) in lb (W' in kg);
E_{is} = Energy input to be absorbed during side loading in ft-lb (E'_{is} in J [joules]);
$E_{is} = 723 + 0.4\ W$ ($E'_{is} = 100 + 0.12\ W'$);
E_{ir} = Energy input to be absorbed during rear loading in ft-lb (E'_{ir} in J);
$E_{ir} = 0.47\ W$ ($E'_{ir} = 0.14\ W'$);
L = Static load, lbf [pounds force], (N) [newtons];
D = Deflection under L, in. (mm);
L–D = Static load-deflection diagram;
L_{max} = Maximum observed static load;
Load Limit = Point on a continuous L–D curve where the observed static load is 0.8 L_{max} on the down slope of the curve (see Figure C–5);
E_u = Strain energy absorbed by the protective enclosure in ft-lbs (J); area under the L–D curve;
FER = Factor of energy ratio;
$FER_{is} = E_u/E_{is}$; and
$FER_{ir} = E_u/E_{ir}$.

* * * * *

■ 6. In Appendix B to subpart C, remove existing Figures C–1 through C–16 and add in their place new Figures C–1 through C–16.

BILLING CODE 4510–26–P

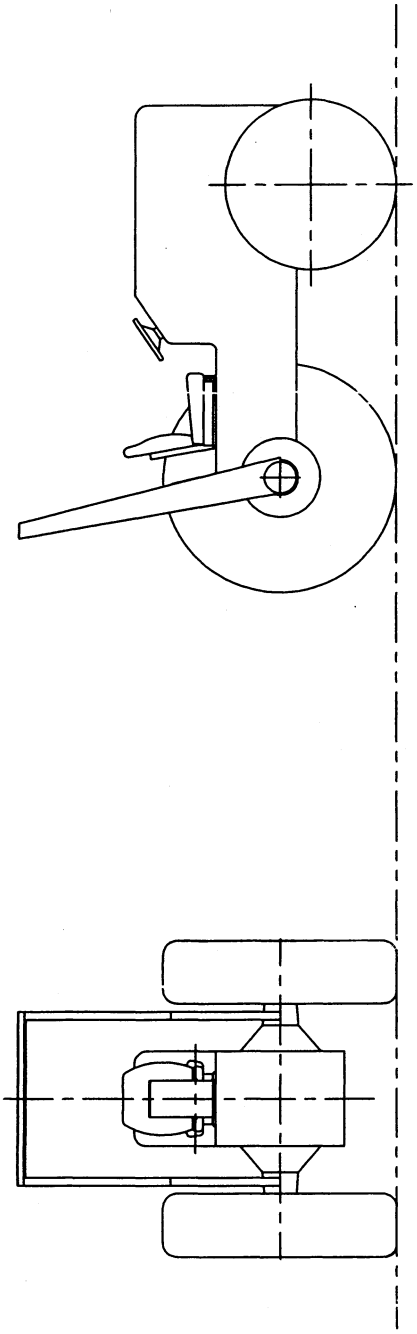

FIGURE C-1 - TRACTOR WITH TYPICAL PROTECTIVE FRAME.

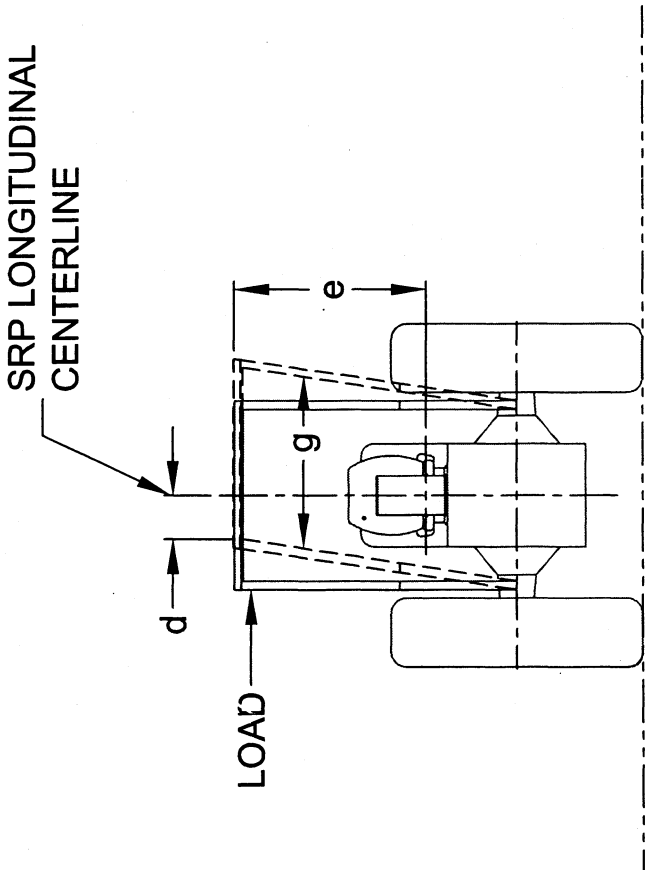

FIGURE C-2 - SIDE LOAD APPLICATION.

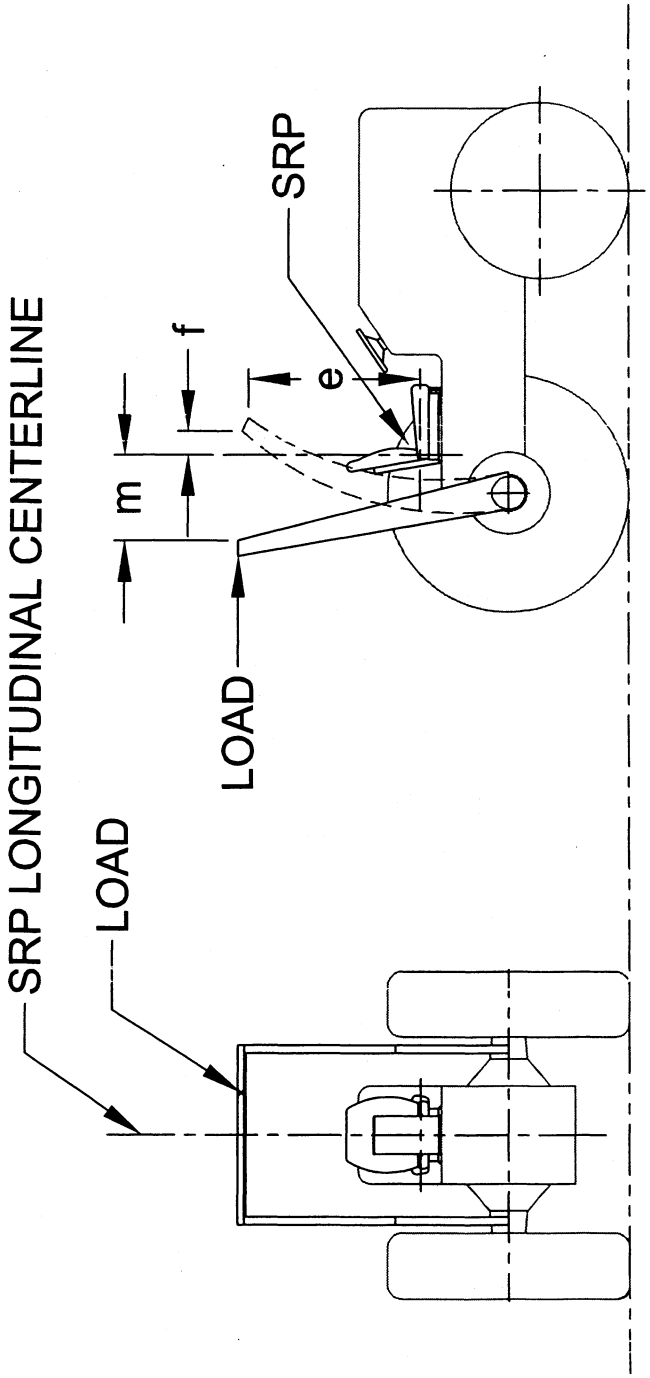

FIGURE C-3 - REAR LOAD APPLICATION.

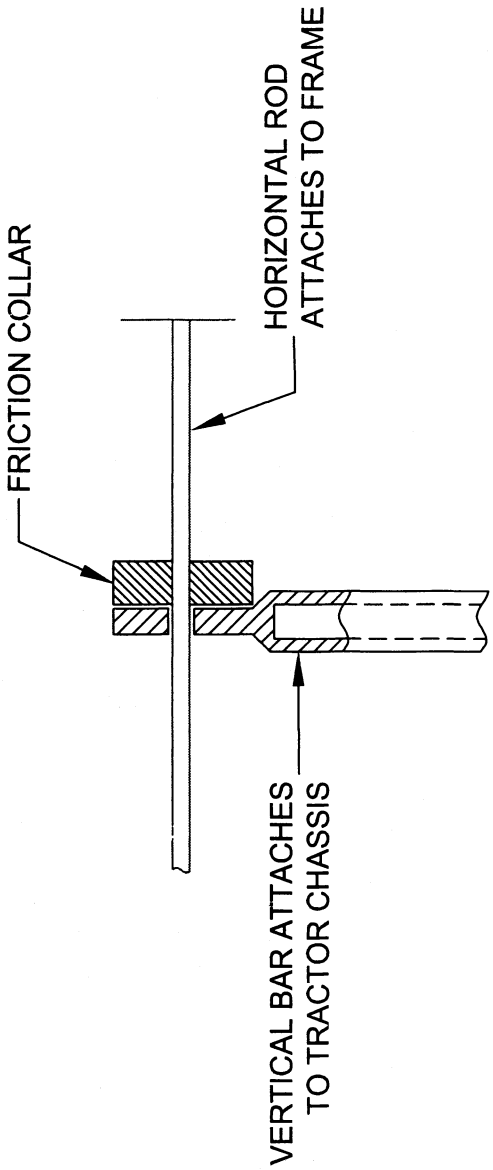

FIGURE C-4 - METHOD OF MEASURING INSTANTANEOUS DEFLECTION.

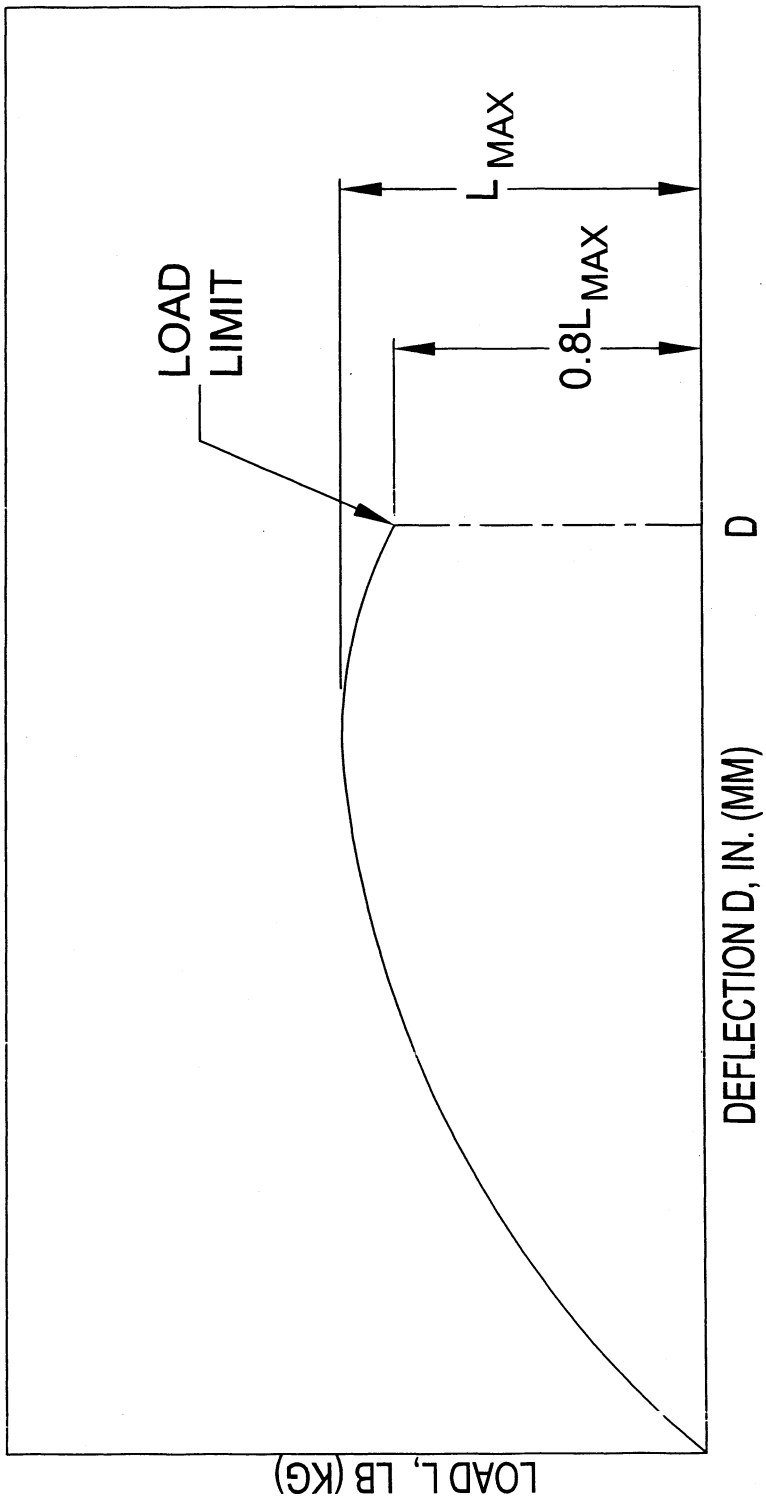

FIGURE C-5 - TYPICAL L-D DIAGRAM.

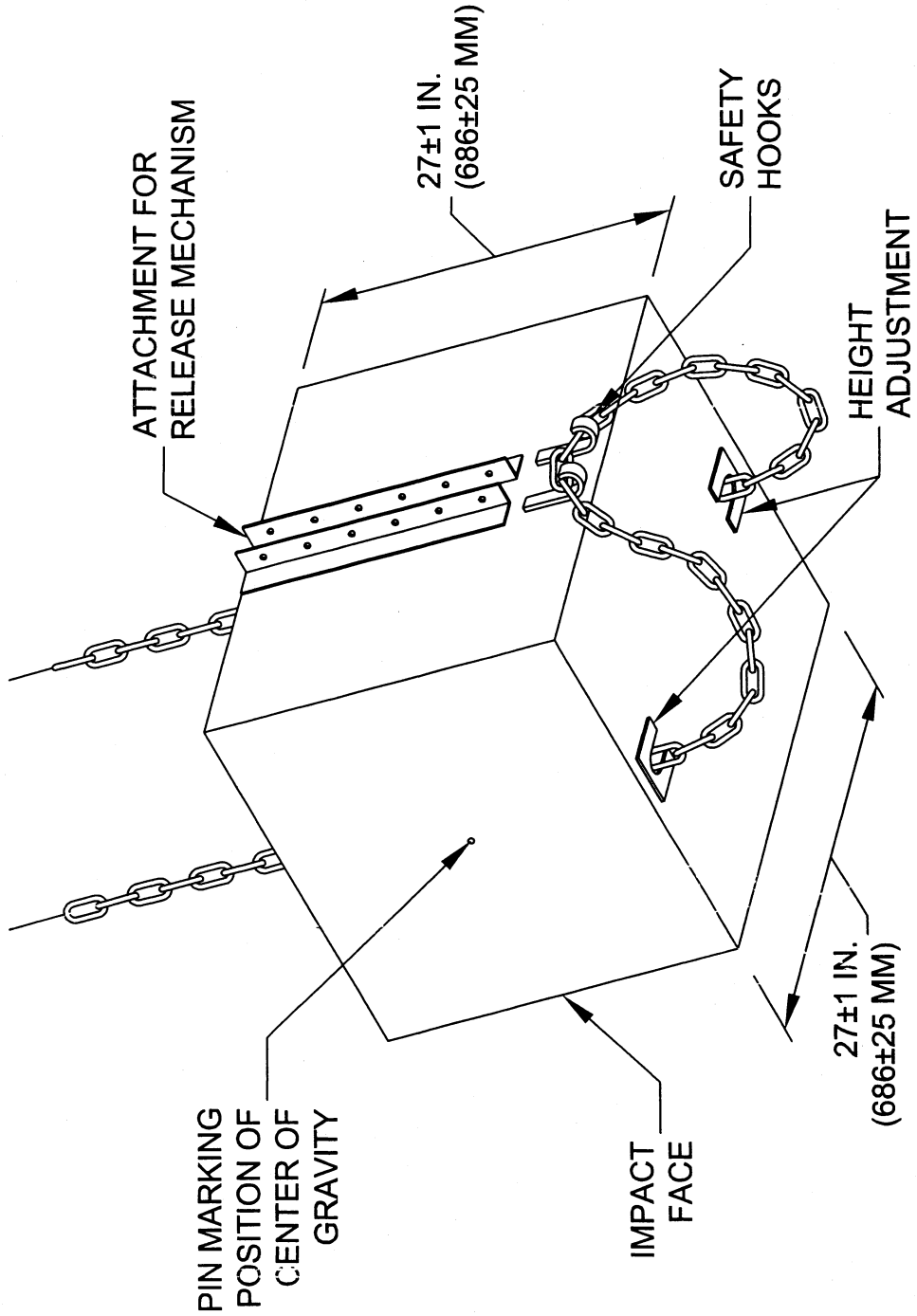

FIGURE C-6 - PENDULUM.

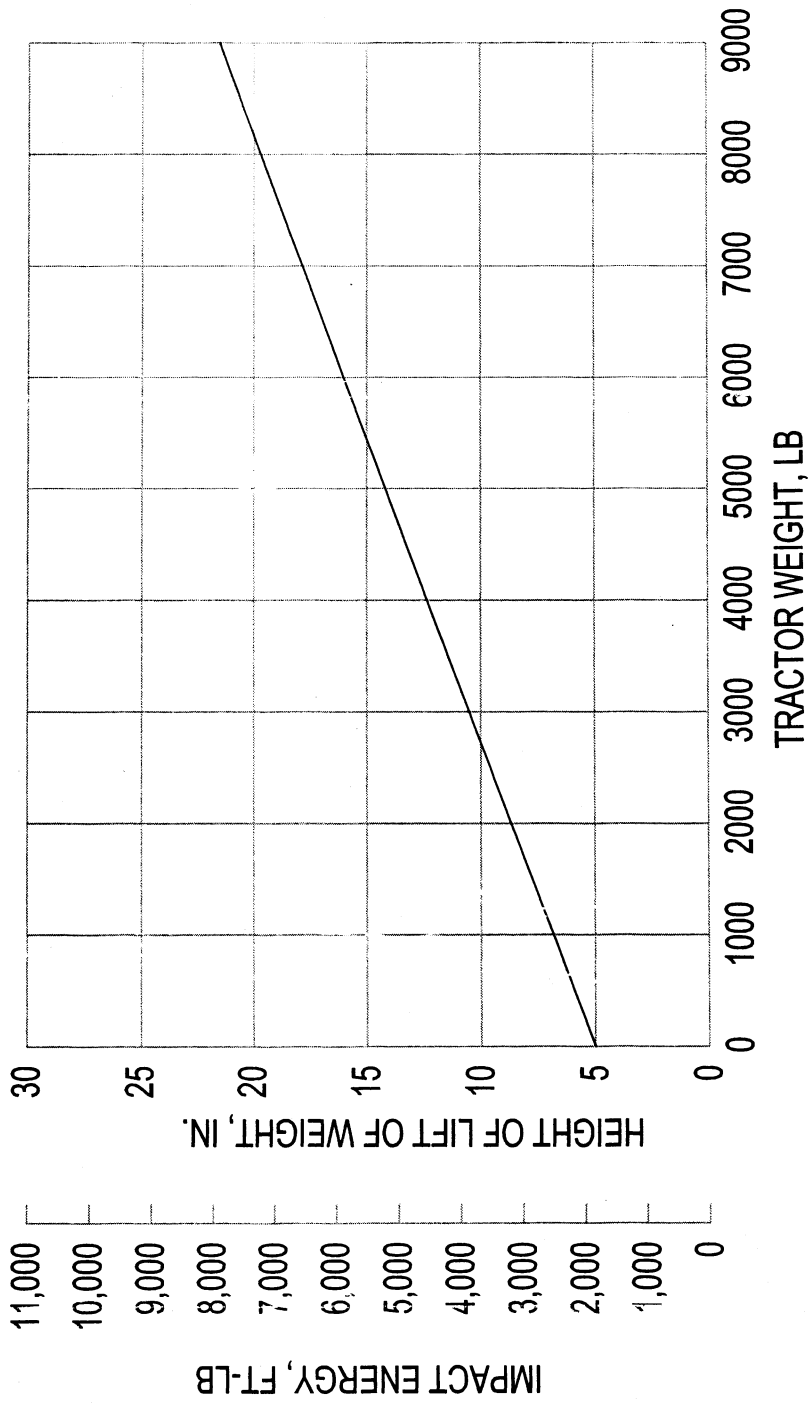

NOTATION OF FORMULAE
H=4.92+0.00190W or H'=125+0.107W'
W=tractor weight specified by 29 CFR 1928.51(a) in lbs (W' in kg).

FIGURE C-7 - IMPACT ENERGY AND CORRESPONDING LIFT HEIGHT OF 4,410 LB (2,000 kg) WEIGHT.

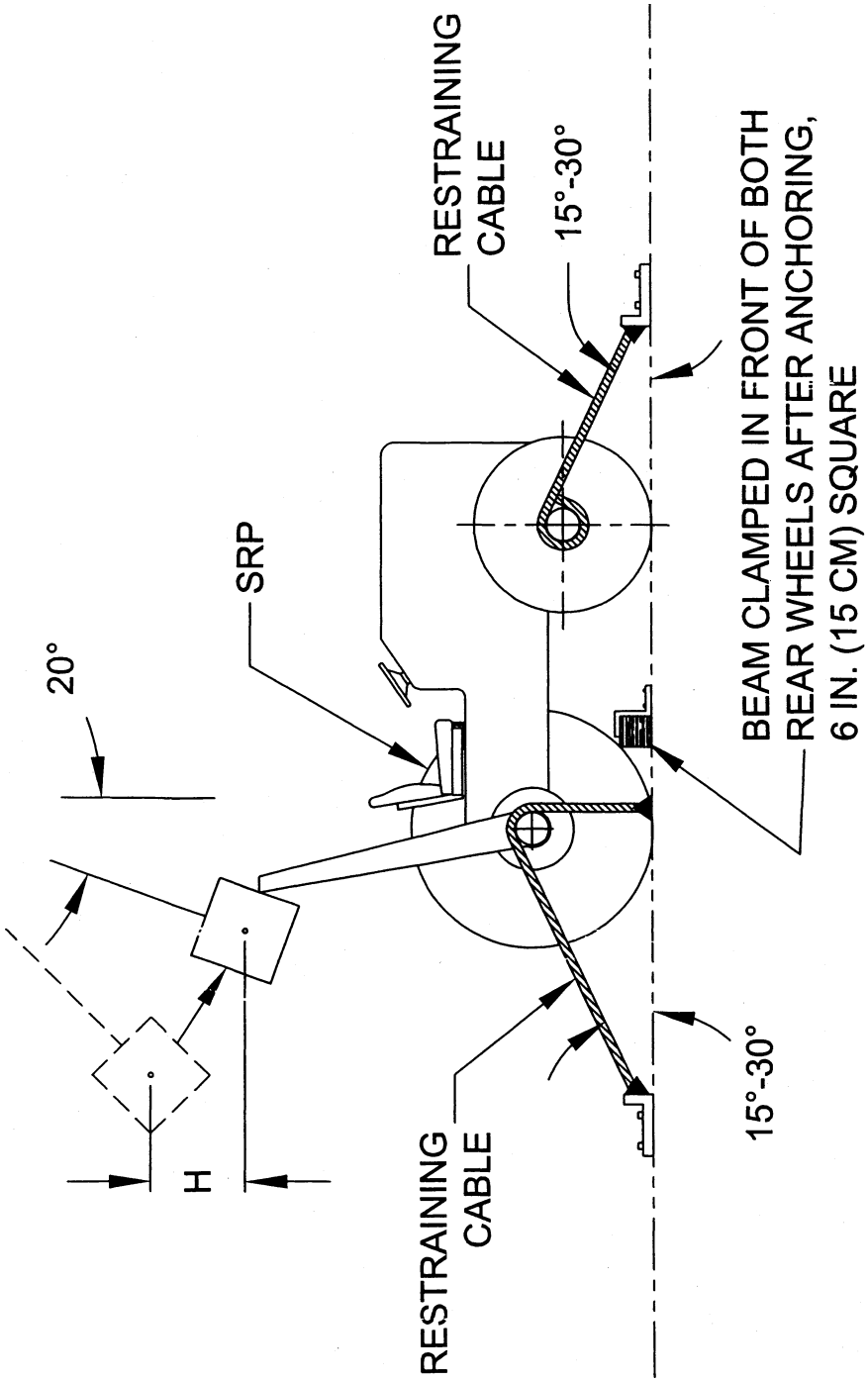

FIGURE C-8 - REAR IMPACT APPLICATION.

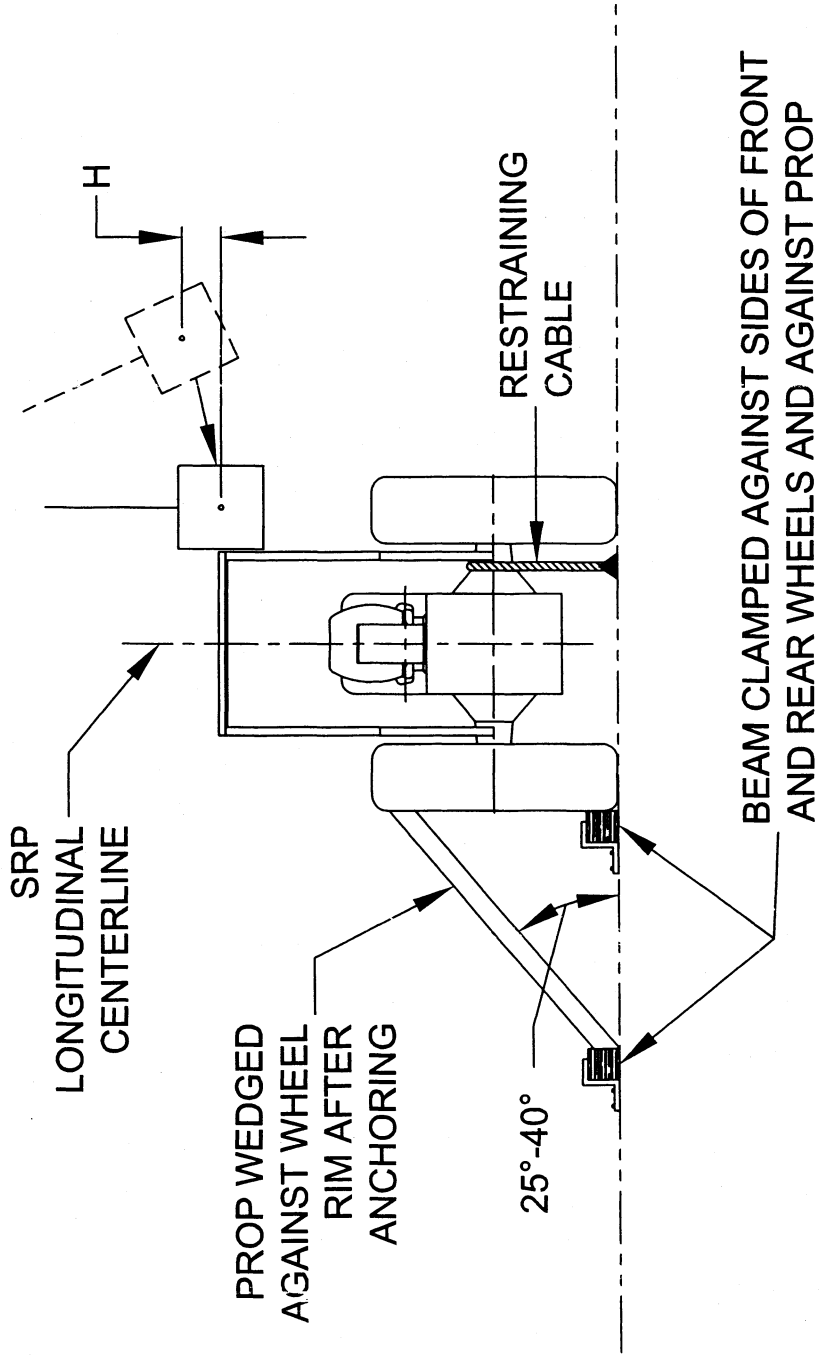

FIGURE C-9 - SIDE IMPACT APPLICATION.

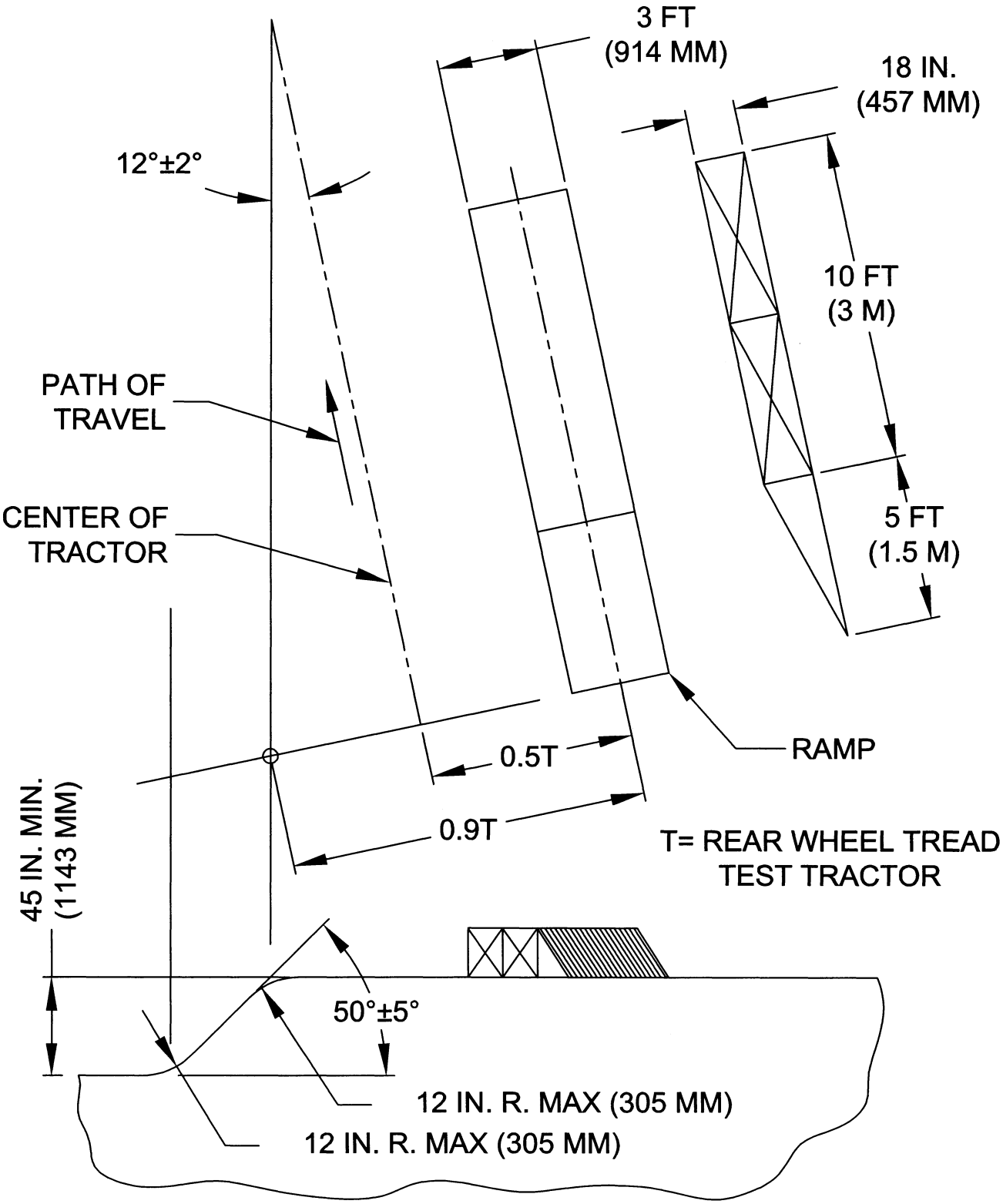

FIGURE C-10 - SIDE OVERTURN BANK AND RAMP.

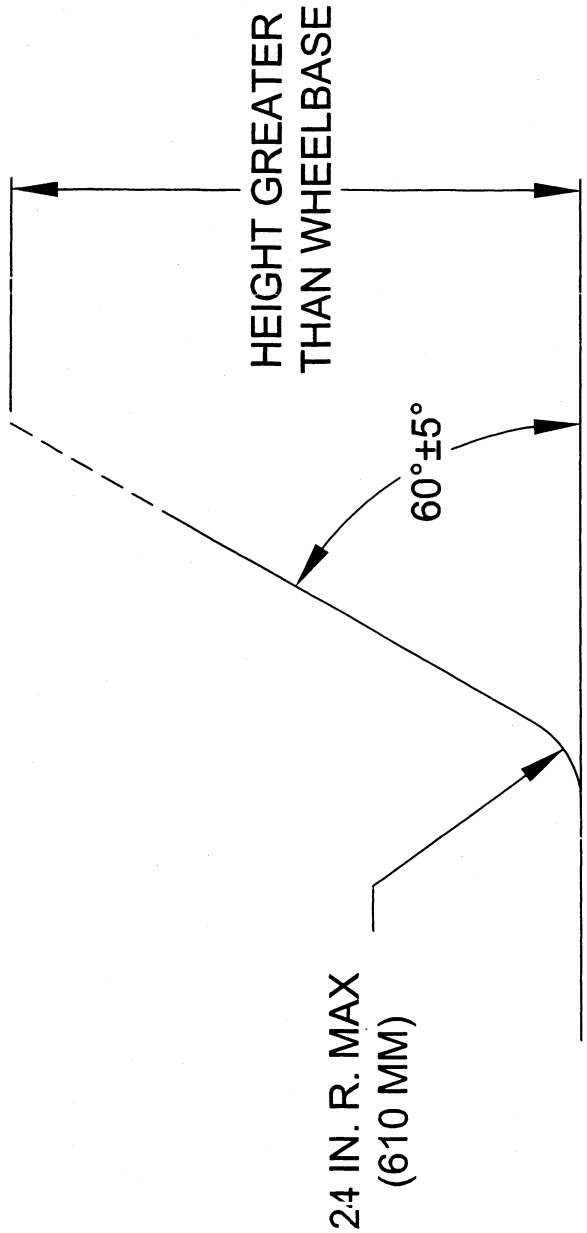

FIGURE C-11 - TYPICAL REAR OVERTURN BANK.

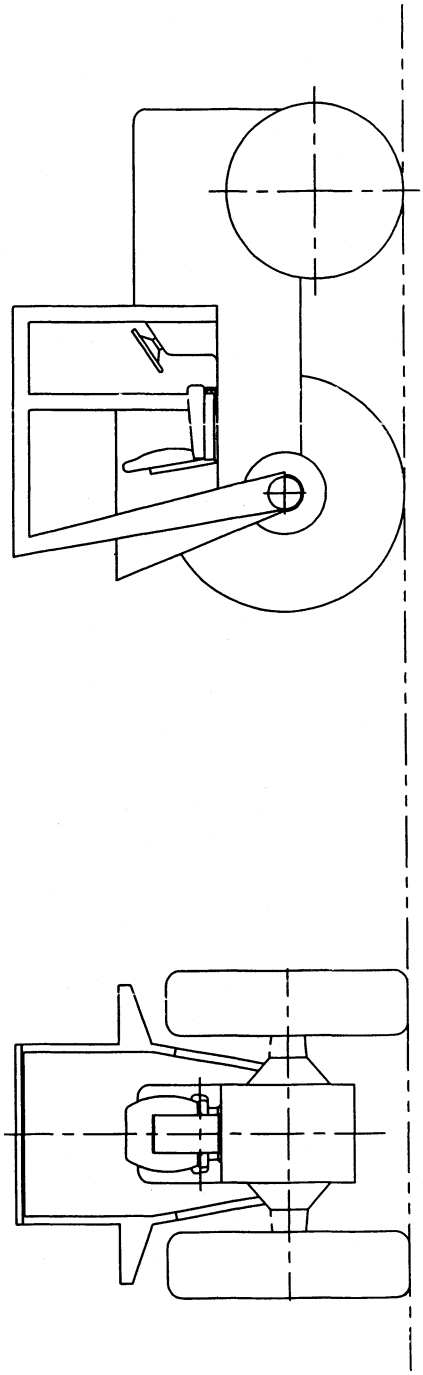

FIGURE C-12 - TRACTOR WITH TYPICAL PROTECTIVE ENCLOSURE.

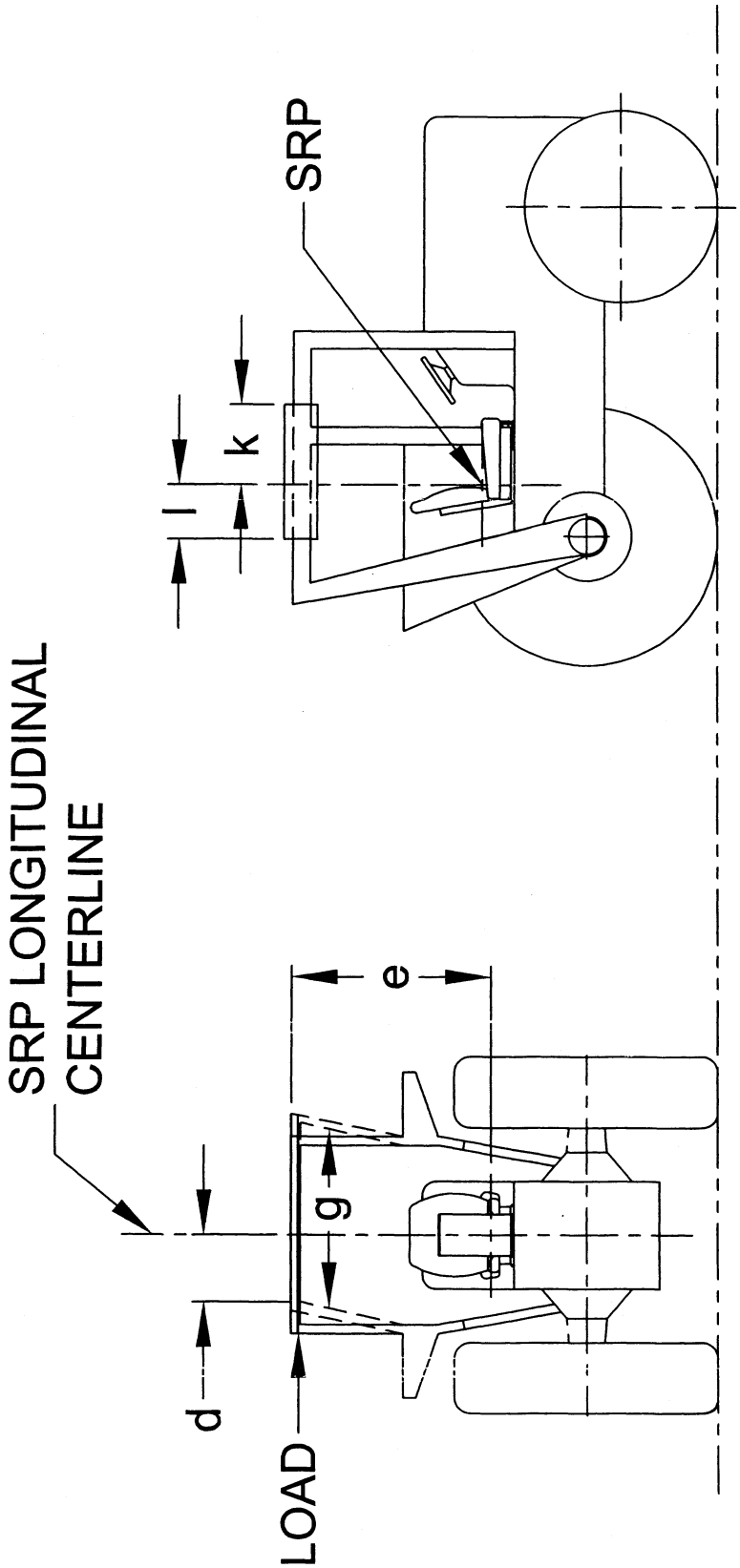

FIGURE C-13 - SIDE LOAD APPLICATION.

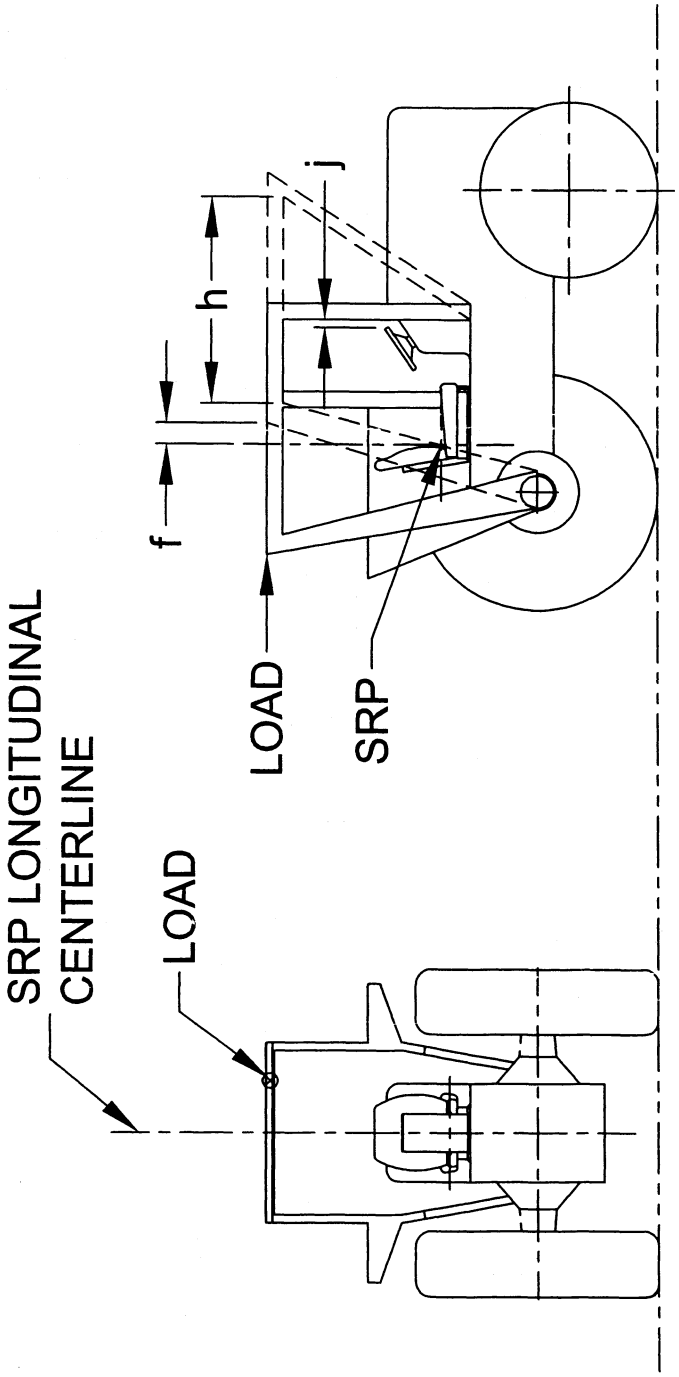

FIGURE C-14 - REAR LOAD APPLICATION.

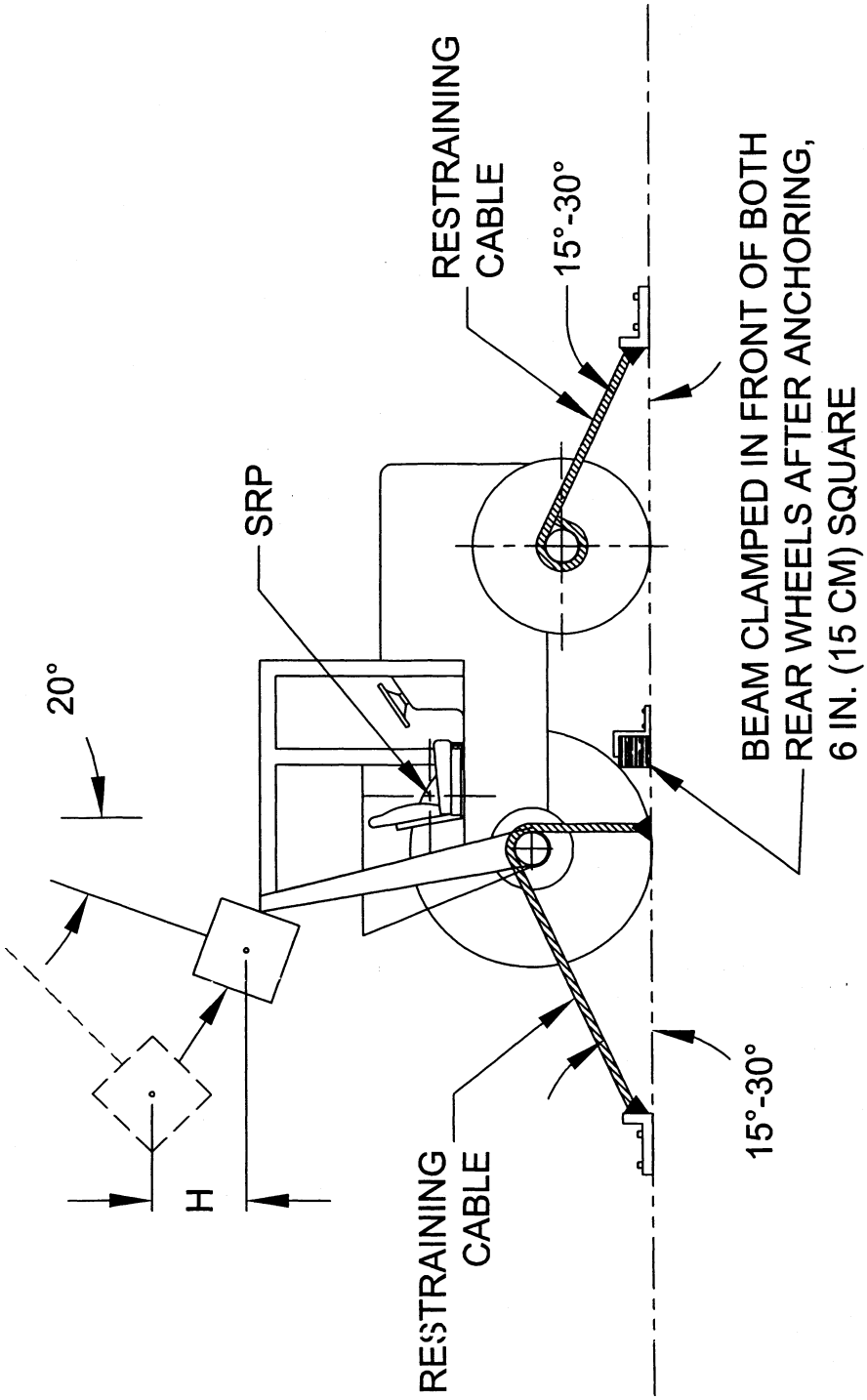

FIGURE C-15 - REAR IMPACT APPLICATION.

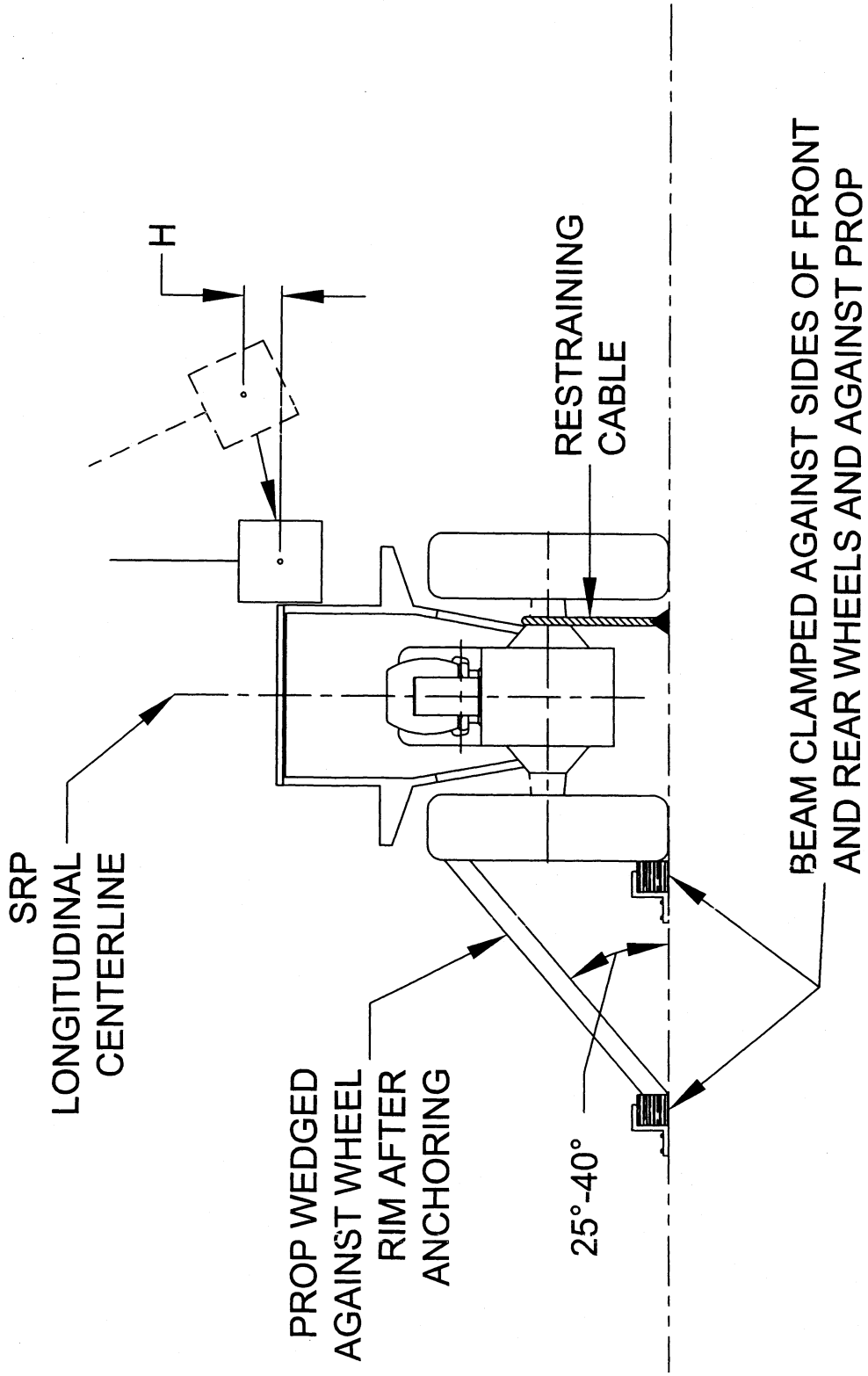

FIGURE C-16 - SIDE IMPACT APPLICATION.

* * * * *

[FR Doc. 06–6327 Filed 7–19–06; 8:45 am]
BILLING CODE 4510–26–C

ENVIRONMENTAL PROTECTION AGENCY

40 CFR Part 52

[Docket No. EPA–R02–OAR–2006–0303, FRL–8191–3]

Approval and Promulgation of Implementation Plans; New York Ozone State Implementation Plan Revision

AGENCY: Environmental Protection Agency (EPA).

ACTION: Final rule.

SUMMARY: The Environmental Protection Agency is approving a revision to the New York State Implementation Plan (SIP) related to the control of oxides of nitrogen (NO_X) and volatile organic compounds (VOC) from stationary sources. The SIP revision consists of amendments to Title 6 of the New York Codes, Rules and Regulations, Parts 214, ''Byproduct Coke Oven Batteries,'' and 216, ''Iron and/or Steel Processes.'' The revision was submitted to comply with the 1-hour ozone Clean Air Act reasonably available control technology requirements for major sources of VOC and NO_X not covered by Control Techniques Guidelines. The intended effect of this action is to approve control strategies which will result in emission reductions that will help achieve attainment of the national ambient air quality standard for ozone.

DATES: *Effective Date:* This rule will be effective August 21, 2006.

ADDRESSES: EPA has established a docket for this action under the Federal Docket Management System (FDMS) which replaces the Regional Materials in EDOCKET (RME) docket system. The new FDMS is located at *www.regulations.gov* and the docket ID for this action is EPA–R02–OAR–2006–0303. All documents in the docket are listed in the FDMS index. Publicly available docket materials are available either electronically in FDMS or in hard copy at the Environmental Protection Agency, Region 2 Office, Air Programs Branch, 290 Broadway, 25th Floor, New York, New York 10007–1866. Copies of the documents relevant to this action are also available for public inspection during normal business hours, by appointment at the Air and Radiation Docket and Information Center, Environmental Protection Agency, Room B–108, 1301 Constitution Avenue, NW., Washington, DC; and the New York State Department of Environmental Conservation, Division of Air Resources, 625 Broadway, Albany, New York 12233.

FOR FURTHER INFORMATION CONTACT: Kirk J. Wieber, Air Programs Branch, Environmental Protection Agency, 290 Broadway, 25th Floor, New York, New York 10007–1866, (212) 637–3381 or *Wieber.Kirk@epa.gov.*

SUPPLEMENTARY INFORMATION:

I. What was included in New York's submittal?

On July 8, 1994, New York State Department of Environmental Conservation (NYSDEC) submitted to EPA a request to revise its SIP. The revisions consisted of amendments to Title 6 of the New York Codes, Rules and Regulations (NYCRR) Parts 214, ''Byproduct Coke Oven Batteries,'' and 216, ''Iron and/or Steel Processes.'' Parts 214 and 216 were adopted by the State on July 8, 1994, and became effective on September 22, 1994.

On May 2, 2005 (71 FR 25800), EPA proposed to approve revised Parts 214 and 216 into the federally approved New York SIP. For a detailed discussion on the content and requirements of the revisions to New York's regulations, the reader is referred to EPA's proposed rulemaking action.

II. What comments did EPA receive in response to its proposal?

In response to EPA's May 2, 2005, proposed rulemaking action, EPA received no adverse comments.

III. What is EPA's conclusion?

EPA has evaluated New York's submittal for consistency with the Act, EPA regulations, and EPA policy. EPA has determined that the revisions to Part 214, ''By-Product Coke Oven Batteries'' and Part 216, ''Iron and/or Steel Processes'' of New York's regulations meet the VOC and NO_X RACT ''catch-up'' requirements under sections 182(b)(2) and 182(f) of the Act for non-Control Techniques Guidelines major sources. Therefore, EPA is approving revised Parts 214 and 216 into the federally approved New York SIP.

IV. Statutory and Executive Order Reviews

Under Executive Order 12866 (58 FR 51735, October 4, 1993), this action is not a ''significant regulatory action'' and therefore is not subject to review by the Office of Management and Budget. For this reason, this action is also not subject to Executive Order 13211, ''Actions Concerning Regulations That Significantly Affect Energy Supply, Distribution, or Use'' (66 FR 28355, May 22, 2001). This action merely approves state law as meeting federal requirements and imposes no additional requirements beyond those imposed by state law. Accordingly, the Administrator certifies that this rule will not have a significant economic impact on a substantial number of small entities under the Regulatory Flexibility Act (5 U.S.C. 601 *et seq.*). Because this rule approves pre-existing requirements under state law and does not impose any additional enforceable duty beyond that required by state law, it does not contain any unfunded mandate or significantly or uniquely affect small governments, as described in the Unfunded Mandates Reform Act of 1995 (Pub. L. 104–4).

This rule also does not have tribal implications because it will not have a substantial direct effect on one or more Indian tribes, on the relationship between the Federal Government and Indian tribes, or on the distribution of power and responsibilities between the Federal Government and Indian tribes, as specified by Executive Order 13175 (65 FR 67249, November 9, 2000). This action also does not have federalism implications because it does not have substantial direct effects on the states, on the relationship between the national government and the states, or on the distribution of power and responsibilities among the various levels of government, as specified in Executive Order 13132 (64 FR 43255, August 10, 1999). This action merely approves a state rule implementing a federal standard, and does not alter the relationship or the distribution of power and responsibilities established in the Act. This rule also is not subject to Executive Order 13045 ''Protection of Children from Environmental Health Risks and Safety Risks'' (62 FR 19885, April 23, 1997), because it is not economically significant.

In reviewing SIP submissions, EPA's role is to approve state choices, provided that they meet the criteria of the Act. In this context, in the absence of a prior existing requirement for the State to use voluntary consensus standards (VCS), EPA has no authority to disapprove a SIP submission for failure to use VCS. It would thus be inconsistent with applicable law for EPA, when it reviews a SIP submission, to use VCS in place of a SIP submission that otherwise satisfies the provisions of the Act. Thus, the requirements of section 12(d) of the National Technology Transfer and Advancement Act of 1995 (15 U.S.C. 272 note) do not apply. This rule does not impose an information collection burden under the provisions of the Paperwork Reduction Act of 1995 (44 U.S.C. 3501 *et seq.*).

The Congressional Review Act, 5 U.S.C. 801 *et seq.*, as added by the Small Business Regulatory Enforcement

Fairness Act of 1996, generally provides that before a rule may take effect, the agency promulgating the rule must submit a rule report, which includes a copy of the rule, to each House of the Congress and to the Comptroller General of the United States. EPA will submit a report containing this rule and other required information to the U.S. Senate, the U.S. House of Representatives, and the Comptroller General of the United States prior to publication of the rule in the **Federal Register**. A major rule cannot take effect until 60 days after it is published in the **Federal Register**. This action is not a ''major rule'' as defined by 5 U.S.C. 804(2).

Under section 307(b)(1) of the Act, petitions for judicial review of this action must be filed in the United States Court of Appeals for the appropriate circuit by September 18, 2006. Filing a petition for reconsideration by the Administrator of this final rule does not affect the finality of this rule for the purposes of judicial review nor does it extend the time within which a petition for judicial review may be filed, and shall not postpone the effectiveness of such rule or action. This action may not be challenged later in proceedings to enforce its requirements. (See section 307(b)(2).)

List of Subjects in 40 CFR Part 52

Environmental protection, Air pollution control, Incorporation by reference, Intergovernmental relations, Oxides of nitrogen, Ozone, Reporting and recordkeeping requirements, Volatile organic compounds.

Dated: June 23, 2006.

Alan J. Steinberg,

Regional Administrator, Region 2.

■ Part 52, chapter I, title 40 of the Code of Federal Regulations is amended as follows:

PART 52—[AMENDED]

■ 1. The authority citation for part 52 continues to read as follows:

Authority: 42 U.S.C. 7401 *et seq.*

Subpart HH—New York

■ 2. Section 52.1670 is amended by adding new paragraph (c)(110) to read as follows:

§ 52.1670 Identification of plans.

* * * * *

(c) * * *

* * * * *

(110) Revisions to the State Implementation Plan submitted on July 8, 1994, by the New York State Department of Environmental Conservation (NYSDEC), which consisted of amendments to Title 6 of the New York Codes, Rules and Regulations (NYCRR) Parts 214, ''Byproduct Coke Oven Batteries,'' and 216, ''Iron and/or Steel Processes.''

(i) Incorporation by reference:

(A) Regulations Part 214, ''Byproduct Coke Oven Batteries,'' and Part 216, ''Iron and/or Steel Processes'' of Title 6 of the New York Codes, Rules and Regulations (NYCRR), filed on August 23, 1994, and effective on September 22, 1994.

(ii) Additional information:

(A) Letter from New York State Department of Environmental Conservation, dated March 1, 2006, identifying the level of NO_X emissions from generic sources located in New York State that are subject to Parts 214 and 216.

■ 3. Section 52.1679 is amended by revising the entries under Title 6 for Part 214 and Part 216 in the table to read as follows:

§ 52.1679 EPA-approved New York State regulations.

New York State regulation	State effective date	Latest EPA approval date	Comments
Title 6:			
* * *	*	*	* *
Part 214, ''Byproduct Coke Oven Batteries''	9/22/94	7/20/06 [Insert FR page citation].	
* * *	*	*	* *
Part 216, ''Iron and/or Steel Processes''	9/22/94	7/20/06 [Insert FR page citation].	
* * *	*	*	* *

[FR Doc. E6–11452 Filed 7–19–06; 8:45 am]

BILLING CODE 6560–50–P

ENVIRONMENTAL PROTECTION AGENCY

40 CFR Part 82

[EPA–HQ–OAR–2003–0130–FRL–8199–9]

RIN 2060–AL90

Protection of Stratospheric Ozone: Minor Amendments to the Regulations Implementing the Allowance System for Controlling HCFC Production, Import and Export

AGENCY: Environmental Protection Agency [EPA].

ACTION: Direct final rule.

SUMMARY: EPA is taking direct final action to amend the current regulations governing the production and trade of certain ozone-depleting substances to address issues concerning the export of previously imported material, heels, the exemption allowance petition process for HCFC–141b for military and space vehicle applications, and the definition for ''importer.'' We are making these minor adjustments to our regulations in response to requests from the regulated community, to ensure equitable treatment of stakeholders, and to reduce burden where the integrity of the requirements can still be sufficiently maintained.

DATES: This direct final rule is effective on October 18, 2006 without further notice unless EPA receives adverse comment by August 21, 2006, or by September 5, 2006 if a hearing is requested. If we receive adverse comment we will publish a timely withdrawal in the **Federal Register** informing the public that this rule, or an amendment paragraph or section of this rule, will not take effect.

ADDRESSES: Submit your comments, identified by Docket ID No. EPA–HQ–OAR–2003–0130, by one of the following methods:

- *www.regulations.gov:* Follow the on-line instructions for submitting comments.
- E-mail: *a-and-r-Docket@epa.gov.*
- Fax: 202–566–1741.

• Mail: Docket #, Air and Radiation Docket and Information Center, U.S. Environmental Protection Agency, Mail code: 6102T, 1200 Pennsylvania Ave., NW., Washington, DC 20460.

• Hand Delivery: Docket #EPA–HQ–OAR–2003–0130, Air and Radiation Docket at EPA West, 1301 Constitution Avenue, NW., Room B108, Mail Code 6102T, Washington, DC 20460. Such deliveries are only accepted during the Docket's normal hours of operation, and special arrangements should be made for deliveries of boxed information.

Instructions: Direct your comments to Docket ID No. EPA–HQ–OAR–2003–0130. EPA's policy is that all comments received will be included in the public docket without change and may be made available online at *www.regulations.gov,* including any personal information provided, unless the comment includes information claimed to be Confidential Business Information (CBI) or other information whose disclosure is restricted by statute. Do not submit information that you consider to be CBI or otherwise protected through *www.regulations.gov* or e-mail. The *www.regulations.gov* Web site is an ''anonymous access'' system, which means EPA will not know your identity or contact information unless you provide it in the body of your comment. If you send an e-mail comment directly to EPA without going through *www.regulations.gov* your e-mail address will be automatically captured and included as part of the comment that is placed in the public docket and made available on the Internet. If you submit an electronic comment, EPA recommends that you include your name and other contact information in the body of your comment and with any disk or CD–ROM you submit. If EPA cannot read your comment due to technical difficulties and cannot contact you for clarification, EPA may not be able to consider your comment. Electronic files should avoid the use of special characters, any form of encryption, and be free of any defects or viruses. For additional information about EPA's public docket visit the EPA Docket Center homepage at *http://www.epa.gov/epahome/dockets.htm.*

FOR FURTHER INFORMATION CONTACT: Cindy Axinn Newberg, EPA, Stratospheric Protection Division, Office of Atmospheric Programs, Office of Air and Radiation (6205J), 1200 Pennsylvania Avenue, NW., Washington, DC 20460, (202) 343–9729, *newberg.cindy@epa.gov.*

SUPPLEMENTARY INFORMATION: (1) Under the *Montreal Protocol on Substances that Deplete the Ozone Layer* (Protocol), as amended, the U.S. and other industrialized countries that are Parties to the Protocol have agreed to limit production and consumption of hydrochlorofluorocarbons (HCFCs) and to phase out consumption in a step-wise fashion over time, culminating in a complete phaseout in 2030. Title VI of the Clean Air Act Amendments of 1990 (CAAA) authorizes EPA to promulgate regulations to manage the consumption and production of HCFCs until the total phaseout in 2030. EPA promulgated final regulations establishing an allowance tracking system for HCFCs on January 21, 2003 (68 FR 2820). These regulations were amended on June 17, 2004 (69 FR 34024) to ensure U.S. compliance with the Montreal Protocol. This action amends aspects of the regulations that relate to exports of previously imported material, the import of HCFC heels, the HCFC–141b exemption allowance petition process, the definition of ''importer,'' and other aspects of the regulations.

EPA is publishing this rule without prior proposal because we view this as a non-controversial action and anticipate no adverse comment. However, in the ''Proposed Rules'' section of this **Federal Register**, we are publishing a separate document that will serve as the proposal to amend the current regulations if we receive adverse comment. This direct final rule will be effective on October 18, 2006 without further notice unless we receive adverse comment by August 21, 2006, or by September 5, 2006 if a hearing is requested. If we receive adverse comment, we will publish a timely withdrawal in the **Federal Register** informing the public that the rule, or particular provisions of the rule, will not take effect. We would address public comments in any subsequent final rule based on the proposed rule. We will not institute a second comment period on this action. Any parties interested in commenting must do so at this time.

(2) Abbreviations and Acronyms Used in This Document

Act—Clean Air Act Amendments of 1990
Article 2 countries—industrialized countries that are not parties operating under paragraph 1 of Article 5 of the Montreal Protocol
Article 5 countries—developing countries that satisfy certain conditions laid out in paragraph 1 of Article 5 of the Montreal Protocol
CAAA—Clean Air Act Amendments of 1990
Cap—limitation in level of production or consumption
CFC—chlorofluorocarbon
CFR—Code of Federal Regulations
EPA—Environmental Protection Agency
FDA—Food and Drug Administration
FR—**Federal Register**
HCFC—hydrochlorofluorocarbon
NASA—National Aeronautics and Space Administration
NODA—Notice of Data Availability
NPRM—Notice of Proposed Rulemaking
ODP—ozone depletion potential
ODS—ozone-depleting substance
Party—States and regional economic integration organizations that have consented to be bound by the *Montreal Protocol on Substances that Deplete the Ozone Layer*
Protocol—*Montreal Protocol on Substances that Deplete the Ozone Layer*
SBREFA—Small Business Regulatory Enforcement Fairness Act
SNAP—Significant New Alternatives Policy
UNEP—United Nations Environment Programme
U.S.—United States.

(3) Tips for Preparing Your Comments

When submitting comments, remember to:

• Identify the rulemaking by docket number and other identifying information (subject heading, **Federal Register** date and page number).

• Follow directions—The agency may ask you to respond to specific questions or organize comments by referencing a Code of Federal Regulations (CFR) part or section number.

• Explain why you agree or disagree; suggest alternatives and substitute language for your requested changes.

• Describe any assumptions and provide any technical information and/or data that you used.

• If you estimate potential costs or burdens, explain how you arrived at your estimate in sufficient detail to allow for it to be reproduced.

• Provide specific examples to illustrate your concerns, and suggest alternatives.

• Explain your views as clearly as possible, avoiding the use of profanity or personal threats.

• Make sure to submit your comments by the comment period deadline identified.

Table of Contents

I. Regulated Entities
II. Background
III. Direct Final Action
A. Exports of Previously Imported HCFCs
B. Heels
C. HCFC–141b Exemption Allowance Petition Process
D. Definition of Importer
E. Minor Regulatory Corrections

1. Allowance Requirements for Class II Controlled Substances with Lower Ozone Depletion Potentials
2. Removal of Class II Controlled Substances From § 82.13(f)(2)
IV. Statutory and Executive Order Reviews
A. Executive Order 12866: Regulatory Planning and Review
B. Paperwork Reduction Act
C. Regulatory Flexibility Act
D. Unfunded Mandates Reform Act
E. Executive Order 13132: Federalism
F. Executive Order 13175: Consultation and Coordination With Indian Tribal Governments
G. Executive Order 13045: Protection of Children From Environmental Health and Safety Risks
H. Executive Order 13211: Actions That Significantly Affect Energy Supply, Distribution, or Use
I. National Technology Transfer and Advancement Act
J. Congressional Review Act

I. Regulated Entities

These minor amendments to the HCFC allowance allocation system will affect the following categories:

Category	NAICS code	SIC code	Examples of regulated entities
Chlorofluorocarbon gas manufacturing	325120	2869	Chlorodifluoromethane manufacturers; Dichlorofluoroethane manufacturers; Chlorodifluoroethane manufacturers.
Chlorofluorocarbon gas importers	325120	2869	Chlorodifluoromethane importers; Dichlorofluoroethane importers; Chlorodifluoroethane importers.
Chlorofluorocarbon gas exporters	325120	2869	Chlorodifluoromethane exporters; Dichlorofluoroethane exporters; Chlorodifluoroethane exporters.
Polystyrene Foam Product Manufacturing	326140	3086	Plastics foam Products (Polystyrene Foam Products).
Urethane and Other Foam Product (Except Polystyrene) Manufacturing.	326150	3086	Insulation and cushioning, foam plastics (except polystyrene) manufacturing.

This table is not intended to be exhaustive, but rather provides a guide for readers regarding entities likely to be regulated by this action. This table lists the types of entities that EPA is now aware potentially could be regulated by this action. Other types of entities not listed in this table could also be affected. To determine whether your facility, company, business organization, or other entity is regulated by this action, you should carefully examine these regulations. If you have questions regarding the applicability of this action to a particular entity, consult the person listed in the **FOR FURTHER INFORMATION CONTACT** section.

II. Background

In 1990, as part of a resolution on ozone-depleting substances, the Parties to the Protocol identified hydrochlorofluorocarbons (HCFCs) as transitional substitutes for chlorofluorocarbons (CFCs) and other more destructive ozone-depleting substances (ODSs). In 1992, the Parties negotiated amendments to the Protocol (the ''Copenhagen Amendments'') that created a detailed phaseout schedule for HCFCs, with a cap on consumption for Article 2 (industrialized) countries like the U.S. The Protocol defines consumption as production plus imports minus exports. The consumption cap is derived from the formula of 2.8 percent of the Party's CFC consumption in 1989, plus the Party's consumption of HCFCs in 1989. Based on this formula, the consumption cap for the U.S. is 15,240 ODP-weighted metric tons, effective January 1, 1996.

In the Copenhagen Amendments, the Parties created a schedule with graduated reductions and the eventual phaseout of the consumption of HCFCs. The schedule calls for a 35 percent reduction of the cap on January 1, 2004, followed by a 65 percent reduction on January 1, 2010, a 90 percent reduction on January 1, 2015, a 99.5 percent reduction on January 1, 2020, and a total phaseout on January 1, 2030. As a signatory to the Copenhagen Amendments (the U.S. deposited its instrument of ratification on March 2, 1994), the U.S. must comply with this phaseout schedule under the Protocol.

In 1992, EPA received petitions from environmental groups and industry asking the Agency to implement the phaseout by eliminating the most ozone-depleting substances first. Based on the available data at the time, EPA believed that the U.S. could meet, and possibly exceed, the Protocol schedule through a chemical-by-chemical phaseout. In 1993, as authorized by sections 605 and 606 of the CAAA, EPA established a regulatory phaseout schedule that links the phaseout of particular HCFCs to the phaseout steps under the Protocol (58 FR 65018, December 10, 1993; 58 FR 15014, March 18, 1993). For example, under that schedule, HCFC–141b production and import ceased on January 1, 2003, apart from a few minor exceptions.

In 1999, the Parties negotiated another amendment to the Protocol (the ''Beijing Amendment''), where they agreed to a cap on HCFC production for industrialized countries, effective January 1, 2004. This cap was derived from the average of the Party's consumption cap (2.8 percent of the Party's CFC consumption in 1989, plus the Party's HCFC consumption in 1989) and the result of the same formula for production (2.8 percent of the Party's CFC production in 1989, plus the Party's HCFC production in 1989). This formula results in a U.S. production cap of 15,537 ODP-weighted metric tons. The U.S. ratified the Beijing Amendment on October 1, 2003.

To implement the Protocol, as amended by the Copenhagen and Beijing Amendments, EPA established an allowance system under Title VI of the CAAA to ensure that U.S. production and consumption of HCFCs would continue to stay under the production cap and conform to the consumption phaseout steps. This allowance system was published in the **Federal Register** on January 21, 2003 (68 FR 2820). The HCFC allowance system is part of EPA's program to phase out the production and consumption, and restrict the use, of HCFCs in accordance with section 605 of the CAAA. EPA has accelerated certain aspects of the schedule contained in section 605 as authorized under section 606 of the CAAA.

III. Direct Final Action

EPA is taking direct final action to promulgate various minor amendments to the existing regulations implementing the HCFC phaseout. The following sections discuss these changes individually and specifically.

A. Exports of Previously Imported HCFCs

In accordance with 40 CFR 82.20(a), producers of class II controlled substances can request a ''refund'' of consumption allowances by submitting documentation demonstrating the export of controlled substances and complying with the recordkeeping and reporting requirements of § 82.24. This provision, as it currently is promulgated, only explicitly addresses the ''refund'' of consumption allowances to producers of class II substances and does not address scenarios concerning importers of controlled substances choosing to request a similar refund. The current applicable provisions refer solely to class II controlled substances produced in the United States. EPA has received requests from importers seeking to export previously imported class II controlled substances and obtain refunds of consumption allowances in a manner similar to companies that have produced class II substances. These importers are concerned that domestic manufacturers have inadvertently been given an unfair advantage over importers.

EPA does not believe there was any reason for limiting the refund of consumption allowances solely to companies that produce class II controlled substances in the United States. EPA notes that the current codified language does not prohibit the refund of consumption allowances to importers, but instead fails to address that particular scenario while addressing the scenario of domestically manufactured class II controlled substances. EPA has made a practice of considering importers' requests for refunds of consumption allowances consistently with requests from producers.[1] To reflect this practice of equal treatment, EPA is amending § 82.20(a) to refer to class II controlled substances that are both produced in and imported into the United States. EPA is also amending §§ 82.20(a)(1)(x) and 82.20(a)(2)(i)(B) to refer to importers as well as producers.

B. Heels

As currently defined at § 82.3, a *Heel* is:

> The amount of a controlled substance that remains in a container after it is discharged or off-loaded (that is no more than ten percent of the volume of the container) and that the person owning or operating the container certifies the residual amount will remain the container and be included in a future shipment, or be recovered for transformation, destruction or a non-emissive purpose.

As part of a larger discussion concerning heels in the January 21, 2003 final rule (68 FR 2843), EPA received and addressed comments concerning whether the definition of heels applies to small containers or only to bulk shipments in larger containers, including but not limited to, rail cars. The comments received during the public comment period were placed in public docket A–98–33 which has been incorporated into OAR–2003–0130. In the January 21, 2003 final rule, EPA clarified that the definition of heel did apply to small containers.

Based on a review of these comments and subsequent information brought to EPA's attention, EPA no longer believes it is necessary to require that owners or operators of small containers and cylinders comply with the recordkeeping and reporting provisions. However, EPA currently does not limit the applicability of either the definition of heels or the recordkeeping and reporting provisions at § 82.24(f) to larger bulk shipments. Neither the definition of heels nor the recordkeeping and reporting requirements refers to the size or type of the containers. The recordkeeping and reporting requirements state that any person who brings into the U.S. a container with a heel must indicate on a bill of lading that the class II controlled substance is a heel. Further, the person is required to report quarterly the quantity in kilograms brought into the U.S. and certify that the quantity is truly a heel by certifying it is no more than 10 percent the total volume of the container. In addition, the person must certify that the heel will either remain in the container and be included in a future shipment, be recovered and transformed, be recovered and destroyed, or be recovered for a non-emissive use. Any person who brings a container with a heel into the U.S. also must report on the final disposition of each shipment within 45 days of the end of the control period.

Since the promulgation of the January 21, 2003 final rule, EPA has received new and compelling information regarding the general business practices for handling heels and also information concerning which containers are generally considered to carry heels of sufficient size to necessitate recordkeeping and reporting. In particular, EPA received and reviewed information from multiple sources regarding whether the heel recordkeeping and reporting (§ 82.24(f)) should apply to all sizes and types of containers and whether annual reports would be sufficient. EPA specifically reviewed information regarding business practices for managing heels from rail cars, tank trucks, ISO tanks, 2,000-lb cylinders, and 125-lb cylinders. Based on the information that EPA has reviewed, it seems that generally smaller containers, including 2,000-lb cylinders and 125-lb cylinders, are presumed empty and then refilled. The assumptions and practices for smaller containers differ from those for larger containers, such as rail cars, which are routinely weighed, after which any residual controlled substance that is still within the rail car is accounted. After extensive consideration, EPA stated in a letter contained in the docket for this rulemaking that ''EPA has decided to reduce the reporting burden by modifying the requirements for reporting of heels. These modifications will follow the normal rulemaking process * * * [and] will include a change in frequency of reporting and a limit in the types of containers subject to reporting.''[2] Therefore, consistent with previous communication, through this action, EPA is revising the recordkeeping and reporting burden by modifying the requirements for heels.

EPA is limiting the type of containers affected by the requirements and therefore subject to the recordkeeping and reporting requirements for heels. EPA is amending § 82.24(f) to state that any person who brings into the U.S. rail cars, tank trucks, and ISO tanks containing a class II controlled substance that is a heel as defined in §82.3, must comply with recordkeeping and reporting requirements at § 82.24(f). EPA has determined that the recordkeeping and reporting requirements are unnecessary for smaller containers such as 2,000-lb and 125-lb cylinders because it would be impractical to recover heels from these smaller containers for emissive use. Such heels would be included in future shipments with or without a certification. For the same reason, it is unnecessary to require a report on the final disposition of such heels.

EPA is also changing the reporting frequency for heels that are subject to the recordkeeping and reporting requirements. Section 82.24(f)(2) currently requires quarterly reports of the quantity of heels brought into the U.S. and certification that the heels are truly heels, and that they will either remain in the container to be included in a future shipment, be recovered and

[1] Docket EPA–OAR 2003–0130 contains letters issued by EPA.

[2] Letter signed by Drusilla Hufford, Director, Global Programs Division, May 10, 2004.

transformed, be recovered and destroyed, or be recovered for a non-emissive use. In addition, under § 82.24(f)(3), any person who brings a container with a heel into the U.S. must report on the final disposition of each shipment within 45 days of the end of the control period—thus on an annual basis. Since these regulations took effect EPA has received new and compelling information from several sources regarding the practical implementation of these requirements. After reviewing information with regard to the management of heels, EPA has concluded that decreasing the reporting frequency will lessen the burden to the regulated community while still maintaining the integrity of the allowance system. By changing the regulations to require a single annual report, EPA is eliminating the need for four separate quarterly reports followed by an annual report. Furthermore, EPA is establishing the same date for the annual report requirements under paragraphs (f)(2) and (f)(3) to permit companies to file this information together, thus lessening the overall regulatory burden.

EPA is also amending the definition of *Heel* at § 82.3, to now read that a *Heel* is:

> The amount of a controlled substance that remains in a container after it is discharged or off-loaded (that is no more than ten percent of the volume of the container).

EPA believes it is necessary to amend the definition to decouple the definition of a *Heel* from the recordkeeping and reporting requirements.

EPA is amending the requirements so that companies that will continue to be subject to the provisions will report the same information currently required under § 82.24(f) and in particular, the information required under paragraphs (f)(2) and (f)(3) on an annual basis, within 30 days after the end of the control period, rather than reporting the information required under (f)(2) on a quarterly basis and information required under (f)(3) on an annual basis. EPA is modifying the date of submission of the annual report from 45 days after the end of the control period to 30 days after the end of the control period to be consistent with other annual reporting requirements required under § 82.24. EPA believes a consistent requirement will ease the burden to those that must submit annual reports. EPA believes that the removal of the quarterly reporting requirements and the change to 30 days after the end of the control period will result in a net reduction of burden to the regulated entities that are required to submit annual reports for heels.

C. HCFC–141b Exemption Allowance Petition Process

The final rule published on January 21, 2003 (68 FR 2820) established the HCFC–141b exemption allowance petition process for all formulators [3] of HCFC–141b. The July 20, 2001 notice of proposed rulemaking (66 FR 38063) proposed a petition process solely for space vehicle [4] and defense applications requiring new production of HCFC–141b after 2003. In response to comments received from spray foam formulators, the final rule opened this process up to all formulators of HCFC–141b. At the time of the final rule, those spray foam formulators, citing technical constraints with alternatives to HCFC–141b, suggested that those constraints could impede their transition from HCFC–141b to non-ODS alternatives. Two commenters recommended that EPA allow any entity to petition the Agency for HCFC–141b allowances beyond January 1, 2003. EPA could then, on a case-by-case basis, evaluate the petitioner's assertions that no viable alternatives are available to meet the needs of that specific petitioner. As stated above, EPA agreed with those commenters and established a petition process for all formulators of HCFC–141b to provide relief to any entity that did not have access to HCFC–141b while it was developing alternatives. Since the petition process was established in 2003, the majority of the initial petitioners (spray foam formulators) achieved significant progress in their transition to alternatives. Most firms now market foam systems containing non-ODS alternatives. Acknowledging this progress, in a separate but related rulemaking EPA published a final rule on September 30, 2004, stating that under the Significant New Alternatives Policy (SNAP) program, HCFC–141b would be unacceptable for use as a foam blowing agent starting January 1, 2005, with some minor exceptions (69 FR 58269). EPA did not receive any petitions for HCFC–141b from spray foam formulators for the 2005 control period and does not expect to receive any in the future.

Since 2003, EPA has received and approved petitions for space vehicle and defense applications (the approval letters can be found in Air Docket A–98–33, IV–G–26–34). As in the comments on the July 20, 2001, NPRM, information in petitions from the National Aeronautics and Space Administration (NASA) and Department of Defense (DOD) contractors (including contractors for the U.S. Air Force and the U.S. Department of the Navy) suggests that specific foam applications will continue to require new production of HCFC–141b due to their highly specialized technical nature and the unavailability of qualified alternatives. Depending on the length and/or the technical requirements of the applications, those petitioners expect to require new production of HCFC–141b until at least 2009, if not until 2015, when use of class II controlled substances (which include HCFC–141b) will be largely prohibited in accordance with section 605 of the Clean Air Act [5].

EPA is eliminating the requirement that space vehicle and defense entities with previously approved HCFC–141b exemptions submit an annual renewal petition for HCFC–141b exemption allowances as long as the needed amounts do not increase significantly. The Agency has sufficient information from the petitioners mentioned above whose requests were approved regarding the quantities of HCFC–141b required, the technical constraints associated with alternatives, and the scope of the projects/applications potentially employing HCFC–141b until 2015 (see the documents cited above from A–98–33 as well as IV–D–12, IV–D–16 and IV-D–28). Because of this, it is reasonable to eliminate the requirement to submit annual petitions for space vehicle and defense applications under § 82.16(h), while retaining the petition process for new petitioners who believe they meet the criteria for an exemption, and for those instances where an entity's space vehicle or defense needs will exceed that entity's previously approved amount by greater than ten percent. If

[3] According to 40 CFR 82.3, a formulator is an entity that distributes a class II controlled substance or blends of a class II controlled substance to persons who use the controlled substance for a specific application identified in the formulator's petition for HCFC–141b exemption allowances.

[4] Section 82.3 defines a space vehicle as a ''man-made device, either manned or unmanned, designed for operation beyond earth's atmosphere. This definition includes integral equipment such as models, mock-ups, prototypes, molds, jigs, tooling, hardware jackets, and test coupons. Also included is auxiliary equipment associated with tests, transport, and storage, which through contamination can compromise the space vehicle performance.''

[5] Section 605(a) of the Clean Air Act states that ''Effective January 1, 2015, it shall be unlawful for any person to introduce into interstate commerce or use any class II substance unless such substance—

(1) Has been used, recovered, and recycled;

(2) Is used and entirely consumed (except for trace quantities) in the production of other chemicals; or

(3) Is used as a refrigerant in appliances manufactured prior to January 1, 2020.''

the entity's needs exceed that threshold, then the entity must submit a new petition in accordance with the requirements at § 82.16(h)(1). Given the relatively small quantities of HCFC–141b that have been approved on an annual basis under the exemption program, ten percent represents an extremely small fraction of the HCFC–141b baseline (less than 0.01 percent).

In order to effectively manage and address U.S. space vehicle and defense needs, the Agency requests that any users of HCFC–141b in those applications that have not previously petitioned for HCFC–141b exemption allowances but that plan to seek new production of HCFC–141b in 2007 and beyond under this provision notify EPA of their application, technical constraints, and required quantities of HCFC–141b. We further clarify that the entity's previously approved amount, for the purposes of determining an amount that is ten percent greater, refers solely to amounts for which the entity did submit a petition in accordance with § 82.16(h)(1)–(4).

Furthermore, in order to ensure that the regulations continue to conform to section 603 of the Clean Air Act and to monitor U.S. compliance with the Montreal Protocol production and consumption caps, EPA will maintain the reporting and recordkeeping requirements as detailed in § 82.24. These include the requirement in § 82.24(g)(1) that entities allocated HCFC–141b exemption allowances report biannually the quantity of HCFC–141b that was received as well as the requirements in § 82.24(b)(1)(xi) and § 82.24(c)(1)(xi) that producers and importers report for each quarter the quantity of HCFC–141b that was produced and/or imported for these exempted applications.

In 2005, EPA also received and approved a petition for HCFC–141b exemption allowances where the HCFC–141b was to be used for baseline comparison in a laboratory during product development for HCFC–141b foam for comparative analysis of all new alternative formulations. If EPA develops a separate proposal to address continued production of HCFC–141b for this type of laboratory and product development use, as part of that proposed rulemaking, EPA will request and consider comments concerning the potential need for ongoing exemption allowances for comparative analysis. Since this action pertains only to use of HCFC–141b for space vehicle and military applications, EPA will not consider comments on use of HCFC–141b for comparative analysis during product development to be within the scope of this direct final rule.

D. Definition of Importer

The current definition of ''importer'' at § 82.3, as published in the **Federal Register** on August 4, 1998 (63 FR 41625), reads:

> Importer means the importer of record listed on U.S. Customs Service forms for imported controlled substances, used controlled substances or controlled products.

In the August 4, 1998 **Federal Register** notice, EPA stated that it was simplifying the definition of ''importer'' ''for enforcement purposes'' and that work with an inter-agency taskforce of other federal agencies to enforce against the illegal import of banned class I controlled substances was a factor in the decision to amend the definition. EPA was responding to members of the taskforce that had ''discovered difficulties in working with the definition of importer listed in the May 10, 1995 final rule (60 FR 24988) in building cases against illegal importers due to ambiguities about who ultimately is responsible.'' In an effort to eliminate ambiguity EPA promulgated the definition above amending the May 10, 1995, definition. However, as a practical matter, given the enforcement experience since the promulgation of the 1998 definition above, EPA believes it is better to return to the more encompassing previous definition, modified to indicate that the importer of record is, as stated in the 1998 definition, the person listed on U.S. Customs documentation. Therefore, through this action, EPA is promulgating a revised definition for ''importer'' that is based on the May 10, 1995, definition with clarifying language regarding what is meant by ''importer of record.'' With this change, the ''importer'' of a controlled substance includes, but is not limited to, the ''importer of record.'' The revised definition will read:

> Any person who imports a controlled substance or a controlled product into the United States. ''Importer'' includes the person primarily liable for the payment of any duties on the merchandise or an authorized agent acting on his or her behalf. The term also includes, as appropriate:
> (1) The consignee;
> (2) The importer of record (listed on U.S. Customs Service forms for imported controlled substances, used controlled substances or controlled products);
> (3) The actual owner; or
> (4) The transferee, if the right to draw merchandise in a bonded warehouse has been transferred.

Returning to the May 10, 1995, definition with the additional text clarifying ''importer of record'' better defines the universe of those that could be considered to be the ''importer'' of controlled substances.

E. Minor Regulatory Corrections

1. Allowance Requirements for Class II Substances With Lower Ozone Depleting Potentials

The regulations published on January 21, 2003 (68 FR 2820) establish an allowance system for class II controlled substances. The regulations include mechanisms for distribution and tracking of allowances for HCFC–22, HCFC–142b, and HCFC–141b. EPA recognizes there are many other class II controlled substances that are subject to regulations promulgated under 40 CFR part 82. However, at this time manufacturers, importers and exporters of these other class II controlled substances, including but not limited to HCFC–225ca and HCFC–252, are not required to hold allowances to produce, import, or export these substances. The reasons for this appear in the preamble to the January 21, 2003 rule (68 FR 2823). When EPA apportions baseline production and consumption allowances for these other class II controlled substances, EPA intends to also establish a process under which the Agency would approve petitions for import of used class II controlled substances, similar to the petition process that currently exists for those class II controlled substances for which baseline production and consumption allowances have been apportioned.

As currently written, the prohibitions on production and import at § 82.15(a) and (b) do not specifically limit themselves to those class II controlled substances for which allowances have been distributed. While restricting trade in these other HCFCs was not the intent of the January 21, 2003, final rule, and the allowance requirements have not been interpreted by EPA to extend to these other class II substances, EPA is concerned that it is possible for such an interpretation to be made. Therefore, through this action, EPA is amending the affected paragraphs in § 82.15 to clarify that the prohibitions apply only to those class II controlled substances for which EPA has distributed production and consumption allowances.

2. Removal of Class II Controlled Substances From § 82.13(f)(2)

Prior to the promulgation of the January 21, 2003 requirements for recordkeeping and reporting for class II substances at § 82.24 (68 FR 2820), EPA regulations already contained a select

number of requirements for class II recordkeeping and reporting at § 82.13. As a result of the reorganization of the recordkeeping and reporting requirements that occurred in the January 21, 2003 rulemaking, § 82.13 generally houses the recordkeeping and reporting requirements for class I substances while § 82.24 houses the recordkeeping and reporting requirements for class II substances. The January 21, 2003 rulemaking moved most of the recordkeeping and reporting provisions pertaining to class II substances from § 82.13 to § 82.24, and established additional recordkeeping and reporting requirements specifically for the class II allowance system at § 82.24. Through an oversight, however, § 82.13(f)(2), which is a recordkeeping provision for producers, continued to refer to class II substances. The recordkeeping provisions at § 82.24(b)(2) render the provisions concerning class II substances at § 82.13(f)(2) duplicative. Therefore, this action removes class II substances from § 82.13(f)(2).

IV. Statutory and Executive Order Reviews

A. Executive Order 12866: Regulatory Planning and Review

Under Executive Order 12866 (58 FR 51735, October 4, 1993), the Agency must determine whether this regulatory action is ''significant'' and therefore subject to OMB review and the requirements of the Executive Order. The Order defines a ''significant'' regulatory action as one that is likely to result in a rule that may:

(1) Have an annual effect on the economy of $100 million or more, or adversely affect in a material way the economy, a sector of the economy, productivity, competition, jobs, the environment, public health or safety, or State, local, or tribal government or communities;

(2) Create a serious inconsistency or otherwise interfere with an action taken or planned by another agency;

(3) Mmaterially alter the budgetary impact of entitlements, grants, user fees, or loan programs or the rights and obligations of recipients thereof; or

(4) Raise novel legal or policy issues arising out of legal mandates, the President's priorities, or the principles set forth in the Executive Order.

This rule is not a ''significant regulatory action'' within the meaning of the Executive Order.

B. Paperwork Reduction Act

This action includes only minor changes in the information collection burden. While some minor additional requirements exist, EPA is relieving the industry of other burdens and streamlining requirements. The Office of Management and Budget (OMB) has previously approved the information collection requirements contained in the existing regulations under the provisions of the Paperwork Reduction Act, 44 U.S.C. 3501 *et seq.* and has assigned OMB control number 2060–0498 (EPA ICR No. 2014.02). A copy of the OMB approved Information Collection Request (ICR) may be obtained from The Collection Strategies Division; U.S. Environmental Protection Agency (2822T); 1200 Pennsylvania Ave., NW., Washington, DC 20460 or by calling (202) 566–1672. Burden means the total time, effort, or financial resources expended by persons to generate, maintain, retain, or disclose or provide information to or for a Federal agency. This includes the time needed to review instructions; develop, acquire, install, and utilize technology and systems for the purposes of collecting, validating, and verifying information, processing and maintaining information, and disclosing and providing information; adjust the existing ways to comply with any previously applicable instructions and requirements; train personnel to be able to respond to a collection of information; search data sources; complete and review the collection of information; and transmit or otherwise disclose the information. An agency may not conduct or sponsor, and a person is not required to respond to a collection of information unless it displays a currently valid OMB control number. The OMB control numbers for EPA's regulations in 40 CFR are listed in 40 CFR part 9.

C. Regulatory Flexibility Act

The Regulatory Flexibility Act (RFA) generally requires an agency to prepare a regulatory flexibility analysis of any rule subject to notice and comment rulemaking requirements under the Administrative Procedure Act or any other statute unless the agency certifies that the rule will not have a significant economic impact on a substantial number of small entities. Small entities include small businesses, small organizations, and small governmental jurisdictions.

For purposes of assessing the impacts of today's rule on small entities, small entity is defined as: (1) A small business as defined by the NAICS codes below (2) a small governmental jurisdiction that is a government of a city, county, town, school district or special district with a population of less than 50,000; and (3) a small organization that is any not-for-profit enterprise which is independently owned and operated and is not dominant in its field.

Category	NAICS code	SIC code	NAICS small business size standard (in number of employees or millions of dollars)
1. Chemical and Allied Products, NEC	424690	5169	100
2. Chlorofluorocarbon gas exporters	325120	2869	100

After considering the economic impacts of today's direct final rule on small entities, I certify that this action will not have a significant economic impact on a substantial number of small entities. This direct final rule will not impose any requirements on small entities. None of the entities affected by this rule are considered small as defined by the size standards listed above.

D. Unfunded Mandates Reform Act

Title II of the Unfunded Mandates Reform Act of 1995 (UMRA), Public Law 104–4, establishes requirements for Federal agencies to assess the effects of their regulatory actions on State, local and tribal government and the private sector. Under section 202 of the UMRA, EPA generally must prepare a written statement, including a cost-benefit analysis, for proposed and final rules with ''Federal mandates'' that may result in expenditures by State, local and tribal governments, in the aggregate, or by the private sector, of $100 million

or more in any one year. If a written statement is required under section 202, section 205 of the UMRA generally requires EPA to identify and consider a reasonable number of regulatory alternatives and adopt the least costly, most cost-effective or least burdensome alternative that achieves the objectives of the rule, unless the Agency explains why this alternative is not selected or the selection of this alternative is inconsistent with law.

Section 203 of the UMRA requires the Agency to establish a plan for obtaining input from and informing, educating, and advising any small governments that may be significantly or uniquely affected by the rule. Section 204 of the UMRA requires the Agency to develop a process to allow elected state, local, and tribal government officials to provide input in the development of any proposal containing a significant Federal intergovernmental mandate.

EPA has determined that this direct final rule does not contain a Federal mandate that may result in expenditures of $100 million or more by State, local and tribal governments, in the aggregate, or by the private sector, in any one year. Viewed as a whole, all of today's amendments do not create a Federal mandate resulting in costs of $100 million or more in any one year for State, local and tribal governments, in the aggregate, or for the private sector. Thus, today's direct final rule is not subject to the requirements of sections 202 and 205 of the UMRA. EPA has also determined that this rule contains no regulatory requirements that might significantly or uniquely affect small governments; therefore, EPA is not required to develop a plan with regard to small governments under section 203. Finally, because this direct final rule does not contain a significant intergovernmental mandate, the Agency is not required to develop a process to obtain input from elected state, local, and tribal officials under section 204.

E. Executive Order 13132: Federalism

Executive Order 13132, entitled ''Federalism'' (64 FR 43255, August 10, 1999), requires EPA to develop an accountable process to ensure ''meaningful and timely input by State and local officials in the development of regulatory policies that have federalism implications.'' ''Policies that have federalism implications'' is defined in the Executive Order to include regulations that have ''substantial direct effects on the States, on the relationship between the national government and the States, or on the distribution of power and responsibilities among the various levels of government.''

This direct final rule does not have federalism implications. It will not have substantial direct effects on the States, on the relationship between the national government and the States, or on the distribution of power and responsibilities among the various levels of government, as specified in Executive Order 13132. Today's action is expected to primarily affect producers, importers and exporters of HCFCs. Thus, Executive Order 13132 does not apply to this rule.

F. Executive Order 13175: Consultation and Coordination With Indian Tribal Governments

Executive Order 13175, entitled ''Consultation and Coordination with Indian Tribal Governments'' (65 FR 67249, November 9, 2000), requires EPA to develop an accountable process to ensure ''meaningful and timely input by tribal officials in the development of regulatory policies that have tribal implications.'' This rule does not have tribal implications, as specified in Executive Order 13175. Today's direct final rule does not significantly or uniquely affect the communities of Indian tribal governments. It does not impose any enforceable duties on communities of Indian tribal governments. Thus, Executive Order 13175 does not apply to this rule.

G. Executive Order 13045: Protection of Children From Environmental Health & Safety Risks

Executive Order 13045: ''Protection of Children from Environmental Health Risks and Safety Risks'' (62 FR 19885, April 23, 1997) applies to any rule that: (1) Is determined to be ''economically significant'' as defined under Executive Order 12866, and (2) concerns an environmental health or safety risk that EPA has reason to believe may have a disproportionate effect on children. If the regulatory action meets both criteria, the Agency must evaluate the environmental health or safety effects of the planned rule on children, and explain why the planned regulation is preferable to other potentially effective and reasonably feasible alternatives considered by the Agency.

While this direct final rule is not subject to the Executive Order because it is not economically significant as defined in E.O. 12866, we nonetheless have reason to believe that the environmental health or safety risk addressed by the underlying regulations may have a disproportionate effect on children. Depletion of stratospheric ozone results in greater transmission of the sun's ultraviolet (UV) radiation to the earth's surface. The following studies describe the effects on children of excessive exposure to UV radiation: (1) Westerdahl J, Olsson H, Ingvar C. ''At what age do sunburn episodes play a crucial role for the development of malignant melanoma,'' Eur J Cancer 1994: 30A: 1647–54; (2) Elwood JM Japson J. ''Melanoma and sun exposure: an overview of published studies,'' Int J Cancer 1997; 73:198–203; (3) Armstrong BK, ''Melanoma: childhood or lifelong sun exposure,'' In: Grobb JJ, Stern RS Mackie RM, Weinstock WA, eds. ''Epidemiology, causes and prevention of skin diseases,'' 1st ed. London, England: Blackwell Science, 1997: 63–6; (4) Whieman D., Green A. ''Melanoma and Sunburn,'' Cancer Causes Control, 1994: 5:564–72; (5) Heenan, PJ. ''Does intermittent sun exposure cause basal cell carcinoma? A case control study in Western Australia,'' Int J Cancer 1995; 60: 489–94; (6) Gallagher, RP, Hill, GB, Bajdik, CD, *et al.* ''Sunlight exposure, pigmentary factors, and risk of nonmelanocytic skin cancer I, Basal cell carcinoma.'' Arch Dermatol 1995; 131: 157–63; (7) Armstrong, DK. ''How sun exposure causes skin cancer: an epidemiological perspective,'' Prevention of Skin Cancer. 2004. 89–116.

This direct final rule is making minor changes to the existing regulatory regime for the class II controlled substances. Theses minor changes are not expected to increase the impacts on children's health from stratospheric ozone depletion.

H. Executive Order 13211: Actions That Significantly Affect Energy Supply, Distribution, or Use

This rule is not subject to Executive Order 13211, ''Actions Concerning Regulations That Significantly Affect Energy Supply, Distribution, or Use'' (66 F.R. 28355 (May 22, 2001)) because it is not a significant regulatory action under Executive Order 12866.

I. The National Technology Transfer and Advancement Act

Section 12(d) of the National Technology Transfer and Advancement Act of 1995 (''NTTAA''), Public Law 104–113, section 12(d) (15 U.S.C. 272 note) directs EPA to use voluntary consensus standards in its regulatory activities unless to do so would be inconsistent with applicable law or otherwise impractical. Voluntary consensus standards are technical standards (e.g., materials specifications, test methods, sampling procedures, and business practices) that are developed or adopted by voluntary consensus standards bodies. The NTTAA directs

EPA to provide Congress, through OMB, explanations when the Agency decides not to use available and applicable voluntary consensus standards. This rulemaking does not involve technical standards. Therefore, EPA did not consider the use of any voluntary consensus standards.

J. Congressional Review Act

The Congressional Review Act, 5 U.S.C. 801 *et seq.,* as added by the Small Business Regulatory Enforcement Fairness Act of 1996, generally provides that before a rule may take effect, the agency promulgating the rule must submit a rule report, which includes a copy of the rule, to each House of the Congress and to the Comptroller General of the United States. EPA will submit a report containing this rule and other required information to the U.S. Senate, the U.S. House of Representatives, and the Comptroller General of the United States prior to publication of the rule in the **Federal Register**. A major rule cannot take effect until 60 days after it is published in the **Federal Register**. This action is not a ''major rule'' as defined by 5 U.S.C. 804(2). This rule will be effective October 18, 2006.

List of Subjects in 40 CFR Part 82

Environmental protection, Administrative practice and procedure, Air pollution control, Chemicals, Chlorofluorocarbons, Exports, Hydrochlorofluorocarbons, Imports, Reporting and recordkeeping requirements.

Dated: July 13, 2006.

Stephen L. Johnson,

Administrator.

■ For the reasons stated in the preamble, 40 CFR part 82 is amended as follows:

PART 82—PROTECTION OF STRATOSPHERIC OZONE

■ 1. The authority citation for part 82 continues to read as follows:

Authority: 42 U.S.C. 7414, 7601, 7671–7671q.

Subpart A—Production and Consumption Controls

■ 2. Amend § 82.3 by revising the definitions of ''Heel'' and ''Importer'' to read as follows:

§ 82.3 Definitions for class I and class II controlled substances.

* * * * *

Heel means the amount of a controlled substance that remains in a container after it is discharged or off-loaded (that is no more than ten percent of the volume of the container).

* * * * *

Importer means any person who imports a controlled substance or a controlled product into the United States. ''Importer'' includes the person primarily liable for the payment of any duties on the merchandise or an authorized agent acting on his or her behalf. The term also includes, as appropriate:

(1) The consignee;

(2) The importer of record (listed on U.S. Customs Service forms for imported controlled substances, used controlled substances or controlled products);

(3) The actual owner; or

(4) The transferee, if the right to draw merchandise in a bonded warehouse has been transferred.

* * * * *

■ 3. Amend § 82.13 by revising paragraph (f)(2) introductory text to read as follows:

§ 82.13 Recordkeeping and reporting requirements for class I controlled substances.

* * * * *

(f) * * *

(2) Every producer of a class I controlled substance during a control period must maintain the following records:

* * * * *

■ 4. Amend § 82.15 by revising paragraphs (a)(1) and (b) to read as follows:

§ 82.15 Prohibitions for class II controlled substances.

(a) Production. (1) Effective January 21, 2003, no person may produce class II controlled substances for which EPA has apportioned baseline production and consumption allowances, in excess of the quantity of unexpended production allowances, unexpended Article 5 allowances, unexpended export production allowances, or conferred unexpended HCFC–141b exemption allowances held by that person for that substance under the authority of this subpart at that time in that control period, unless the substances are transformed or destroyed domestically or by a person of another Party, or unless they are produced using an exemption granted in paragraph (f) of this section. Every kilogram of excess production constitutes a separate violation of this subpart.

* * * * *

(b) Import. (1) Effective January 21, 2003, no person may import class II controlled substances (other than transhipments, heels or used class II controlled substances) for which EPA has apportioned baseline production and consumption allowances , in excess of the quantity of unexpended consumption allowances, or conferred unexpended HCFC–141b exemption allowances held by that person under the authority of this subpart at that time in that control period, unless the substances are for use in a process resulting in their transformation or their destruction, or unless they are produced using an exemption granted in paragraph (f) of this section. Every kilogram of excess import constitutes a separate violation of this subpart.

(2) Effective January 21, 2003, no person may import, at any time in any control period, a used class II controlled substance for which EPA has apportioned baseline production and consumption allowances, without having submitted a petition to the Administrator and received a non-objection notice in accordance with § 82.24(c)(3) and (4). A person issued a non-objection notice for the import of an individual shipment of used class II controlled substances may not transfer or confer the right to import, and may not import any more than the exact quantity (in kilograms) of the used class II controlled substance stated in the non-objection notice. Every kilogram of import of used class II controlled substance in excess of the quantity stated in the non-objection notice issued by the Administrator in accordance with § 82.24(c)(3) and (4) constitutes a separate violation of this subpart.

* * * * *

■ 5. Amend § 82.16 by revising paragraph (h)(1) introductory text and by adding paragraphs (h)(7) and (h)(8) to read as follows:

§ 82.16 Phaseout schedule of class II controlled substances.

* * * * *

(h) * * *

(1) Effective January 21, 2003, a formulator of HCFC–141b, an agency, department, or instrumentality of the U.S., or a non-governmental space vehicle entity, may petition EPA for HCFC–141b exemption allowances for the production or import of HCFC–141b after the phaseout date, in accordance with this section. Except as provided in paragraphs (h)(4) and (7) of this section, a petitioner must submit the following information to the Director of EPA's Office of Atmospheric Programs no later than April 21, 2003, for the 2003 control period; and, for any subsequent control period, no later than October 31st of the year preceding the control period for

which the HCFC–141b exemption allowances are requested:

* * * * *

(7) A formulator for, or an agency, department, or instrumentality of the U.S., or a non-governmental space vehicle entity that has previously petitioned for and been granted HCFC–141b exemption allowances under paragraphs (h)(1) through (4) of this section is granted, on January 1 of each control period beginning January 1, 2007, HCFC–141b exemption allowances equivalent to 10% more than the highest amount previously granted under paragraphs (h)(1) through (4) of this section to that petitioner for space vehicle uses or defense applications.

(8) A formulator for, or an agency, department, or instrumentality of the U.S.; or a non-governmental space vehicle entity that has previously petitioned for and been granted HCFC–141b exemption allowances under paragraphs (h)(1) through (4) of this section but now seeks to obtain allowances in addition to those granted under paragraph (h)(7) of this section must submit a new petition in accordance with paragraph (h)(1) of this section.

■ 6. Amend § 82.20 by revising paragraphs (a) introductory text, (a)(1)(x), and (a)(2)(i)(B) to read as follows:

§ 82.20 Availability of consumption allowances in addition to baseline consumption allowances for class II controlled substances.

(a) A person may obtain at any time during the control period, in accordance with the provisions of this section, consumption allowances equivalent to the quantity of class II controlled substances that the person exported from the U.S. and its territories to a foreign state, in accordance with this section, when that quantity of class II controlled substance was produced in the U.S. or imported into the U.S. with expended consumption allowances.

(1) * * *

(x) A written statement from the producer that the class II controlled substances were produced with expended allowances or a written statement from the importer that the class II controlled substances were imported with expended allowances.

(2) * * *

(i) * * *

(B) The consumption allowances will be granted to the person the exporter indicates, whether it is the producer, the importer, or the exporter.

* * * * *

■ 7. Amend § 82.24 as follows:

■ a. Revise paragraphs (c)(1)(vi), (c)(2)(ii), (c)(3) introductory text.

■ b. Revise paragraphs (f) introductory text, (f)(1), (f)(2) introductory text, and (f)(3).

§ 82.24 Recordkeeping and reporting requirements for class II controlled substances.

* * * * *

(c) * * *

(1) * * *

(vi) For substances for which EPA has apportioned baseline production and consumption allowances, the importer's total sum of expended and unexpended consumption allowances by chemical as of the end of that quarter;

* * * * *

(2) * * *

(ii) The quantity (in kilograms) of those class II controlled substances imported that are used and the information provided with the petition where a petition is required under paragraph (c)(3) of this section;

* * * * *

(3) *Petition to import used class II controlled substances and transhipment-Importers.* For each individual shipment over 5 pounds of a used class II controlled substance as defined in § 82.3 for which EPA has apportioned baseline production and consumption allowances, an importer must submit directly to the Administrator, at least 40 working days before the shipment is to leave the foreign port of export, the following information in a petition:

* * * * *

(f) *Heels-Recordkeeping and reporting.* Any person who brings into the U.S. a rail car, tank truck, or ISO tank containing a heel, as defined in § 82.3, of class II controlled substances, must take the following actions:

(1) Indicate on the bill of lading or invoice that the class II controlled substance in the container is a heel.

(2) Report within 30 days of the end of the control period the quantity (in kilograms) brought into the U.S. and certify:

* * * * *

(3) Report on the final disposition of each shipment within 30 days of the end of the control period.

* * * * *

[FR Doc. E6–11532 Filed 7–19–06; 8:45 am]

BILLING CODE 6560–50–P

DEPARTMENT OF HOMELAND SECURITY

Federal Emergency Management Agency

44 CFR Part 64

[Docket No. FEMA–7786]

List of Communities Eligible for the Sale of Flood Insurance

AGENCY: Mitigation Division, Federal Emergency Management Agency (FEMA), Department of Homeland Security.

ACTION: Final rule.

SUMMARY: This rule identifies communities that are participating and suspended from the National Flood Insurance Program (NFIP). These communities have applied to the program and have agreed to enact certain floodplain management measures. The communities' participation in the program authorizes the sale of flood insurance to owners of properties located in the communities listed below.

DATES: *Effective Dates:* The effective date for each community is listed in the fourth column of the following tables.

ADDRESSES: Flood insurance policies for properties located in the communities listed below can be obtained from any licensed property insurance agent or broker serving the eligible community or from the NFIP by calling 1–800–638–6620.

FOR ADDITIONAL INFORMATION CONTACT: William H. Lesser, Mitigation Division, 500 C Street, SW., Washington, DC 20472, (202) 646–2807.

SUPPLEMENTARY INFORMATION: The NFIP enables property owners to purchase flood insurance that is generally not otherwise available. In return, communities agree to adopt and implement local floodplain management regulations that contribute to protecting lives and reducing the risk of new construction from future flooding. Because the communities on the attached list have recently entered the NFIP, subsidized flood insurance is now available for properties in these communities.

FEMA has identified the Special Flood Hazard Areas (SFHAs) in some of these communities by publishing a Flood Hazard Boundary Map (FHBM) or Flood Insurance Rate Map (FIRM). The date of the flood map, if one has been published, is indicated in the fourth column of the table. In the communities listed where a flood map has been published, section 202 of the Flood

Disaster Protection Act of 1973, as amended, 42 U.S.C. 4016(a), requires the purchase of flood insurance as a condition of Federal or Federally-related financial assistance for acquisition or construction of buildings in the SFHAs shown on the map.

The Administrator finds that delayed effective dates would be contrary to the public interest and that notice and public procedure under 5 U.S.C. 553(b) are impracticable and unnecessary.

National Environmental Policy Act. This rule is categorically excluded from the requirements of 44 CFR part 10, Environmental Considerations. No environmental impact assessment has been prepared.

Regulatory Flexibility Act. The Administrator certifies that this rule will not have a significant economic impact on a substantial number of small entities in accordance with the Regulatory Flexibility Act, 5 U.S.C. 601 *et seq.*, because the rule creates no additional burden, but lists those communities eligible for the sale of flood insurance.

Regulatory Classification. This final rule is not a significant regulatory action under the criteria of section 3(f) of Executive Order 12866 of September 30, 1993, Regulatory Planning and Review, 58 FR 51735.

Executive Order 13132, Federalism. This rule involves no policies that have federalism implications under Executive Order 13132.

Executive Order 12988, Civil Justice Reform. This rule meets the applicable standards of Executive Order 12988.

Paperwork Reduction Act. This rule does not involve any collection of information for purposes of the Paperwork Reduction Act, 44 U.S.C. 3501 *et seq.*

List of Subjects in 44 CFR Part 64

Flood insurance, Floodplains.

■ Accordingly, 44 CFR part 64 is amended as follows:

PART 64—[AMENDED]

■ 1. The authority citation for part 64 is revised to read as follows:

Authority: 42 U.S.C. 4001 *et seq.*, Reorganization Plan No. 3 of 1978, 3 CFR, 1978 Comp., p. 329; E.O. 12127, 44 FR 19367, 3 CFR, 1979 Comp., p. 376.

§ 64.6 [Amended]

■ 2. The tables published under the authority of § 64.6 are amended as follows:

State	Location	Community No.	Effective date of eligibility	Current effective map date
New Eligibles: Emergency Program				
Region VII				
Missouri	Theodosia, Village of, Ozark County.	290306	January 25, 2006	Never Mapped.
Region III				
West Virginia	West Liberty, Town of, Ohio County.	540094	February 2, 2006	Never Mapped.
Region V				
Ohio	Sarahsville, Village of, Noble County.	390706	February 9, 2006	FHBM dated March 28, 1975.
Region VI				
Oklahoma	Atoka County, Unincorporated Areas.	400508	.....*do	FHBM dated August 14, 1981.
Do	Pontotoc County, Unincorporated Areas.	400495	.....do	FHBM dated January 10, 1978.
Region IV				
Kentucky	Morgantown, Town of, Butler County.	210242	February 10, 2006	Never Mapped.
Do	St. Charles, Town of, Hopkins County.	210320	.....do	FHBM dated August 13, 1976.
North Carolina	Lasker, Town of, Northampton County.	370580	.....do	Never Mapped.
Region V				
Ohio	LaGrange, Village of, Lorain County.	390806	.....do	FHBM dated December 23, 1977.
Region I				
Maine	Jonesboro, Town of, Washington County.	230315	February 27, 2006	FHBM dated February 14, 1975.
Region IV				
Alabama	Butler County, Unincorporated Areas.	010017	.....do	FHBM dated April 21, 1976.
Georgia	Preston, City of, Webster County.	135170	.....do	Never Mapped.
Do	Webster County, Unincorporated Areas.	135268	.....do	Never Mapped.
South Carolina	Mayesville, Town of, Sumter County.	450225	.....do	FHBM dated March 19, 1976.
Region VII				
Kansas	Atchison County, Unincorporated Areas.	200009	.....do	FHBM dated May 31, 1977.

State	Location	Community No.	Effective date of eligibility	Current effective map date
Iowa	Cherokee County, Unincorporated Areas.	190854	March 8, 2006	FHBM dated May 6, 1977.
Region III				
Maryland	Somerset, Town of, Montgomery County.	240134	March 9, 2006	Never Mapped.
Region VI				
New Mexico	Dexter, Town of, Chaves County.	350112	March 14, 2006	FHBM dated September 17, 1976.
Louisiana	Angie, Village of, Washington Parish.	220231	March 22, 2006	FHBM dated January 3, 1975.
Region IV				
Georgia	Hampton, City of, Henry County.	130107	March 27, 2006	Never Mapped.
Do	Warren County, Unincorporated Areas.	135262	.....do	Never Mapped.
Kentucky	Adairville, City of, Logan County.	210353	.....do	FHBM dated September 8, 1978.
Tennessee	Medina, City of, Gibson County.	470251	.....do	Never Mapped.
New Eligibles: Regular Program				
Region VII				
Iowa	Prescott, City of, Adams County.	190004	January 1, 2006	FHBM dated November 5, 1976, converted to FIRM by letter January 1, 2006.
Missouri	Hallsville, Town of, Boone County.	290712	.....do	NSFHA FHBM Rescinded.
Region III				
Virginia	Round Hill, Town of, Loudoun County.	510279	January 10, 2006	July 5, 2001.
Region VI				
Arkansas	Horseshoe Lake, Town of, Crittenden County.	055057	January 18, 2006	Use Crittenden County (CID 050429) FIRM panel 0250B, dated November 1, 1985.
Region IV				
Tennessee	Pickett County, Unincorporated Areas.	470384	February 1, 2006	FHBM dated December 29, 1978, converted to FIRM by letter February 1, 2006.
Region III				
West Virginia	Harrisville, Town of, Richie County.	540132	February 7, 2006	NSFHA.
Region IV				
Alabama	Chilton County, Unincorporated Areas.	010030	.....do	August 15, 1984.
South Carolina	Bethune, Town of, Kershaw County.	450116	February 10, 2006	December 6, 2000.
Alabama	Cullman County, Unincorporated Areas.	010247	February 27, 2006	December 2, 2004.
Do	Silas, Town of, Choctaw County.	010036	.....do	September 30, 1988.
Region VII				
Nebraska	Center, Village of, Knox County.	310159	.....do	August 18, 2005.
Region V				
Minnesota	Greenwood, Township of, St. Louis County.	270736	March 8, 2006	February 19, 1992.
Region VII				
Missouri	Kingdom City, Village of, Callaway County.	290007	.....do	Use Callaway County (CID 290049) FIRM panel 0200D, dated February 18, 2005.

State	Location	Community No.	Effective date of eligibility	Current effective map date
Region III				
Maryland	Chevy Chase Village, Town of, Montgomery County.	240047	March 13, 2006	NSFHA.
Region VII				
Nebraska	Gosper County, Unincorporated Areas.	310438	March 22, 2006	August 4, 2005.
Iowa	**Montour, City of, Tama County.	190782	.....do	January 19, 2006.
Region X				
Idaho	Carey, City of, Blaine County	160234	.....do	April 20, 2000.
Region V				
Wisconsin	Fontana on Geneva Lake, Village of, Walworth County.	550592	March 23, 2006	December 23, 1977.
Region VII				
Nebraska	Elwood, Village of, Gosper County.	310365	March 31, 2006	August 4, 2005.
Reinstatements				
Region VII				
Nebraska	Perkins County, Unincorporated Areas.	310464	January 17, 2006	September 2, 2005.
Region III				
Pennsylvania	Limestone, Town of, Northampton County.	421922	February 10, 2006	June 1, 1987.
Region IV				
North Carolina	Henderson County, Unincorporated Areas.	370125	February 27, 2006	March 1, 1982.
Tennessee	Benton County, Unincorporated Areas.	470218	.....do	December 16, 2005.
Do	McNairy County, Unincorporated Areas.	470127	.....do	October 24, 2005.
Region VII				
Missouri	Westphalia, City of, Osage County.	290272	March 3, 2006	September 2, 2005.
Suspensions				
Region V				
Ohio	Washington County, Unincorporated Areas.	390566	December 24, 1975, Emerg.; February 18, 1981, Reg.; March 17, 2006, Susp.	February 16, 2006.
Minnesota	Lac Qui Parle County, Unincorporated Areas.	270239	July 3, 1974, Emerg.; June 4, 1980, Reg.; March 17, 2006, Susp.	March 16, 2006.
Region VI				
Arkansas	Quitman, Town of, Cleburne County.	050280	December 22, 1982, Emerg.; October 15, 1985, Reg.; March 17, 2006, Susp.	February 16, 2006.
Region VII				
Missouri	Baldwin Park, Village of, Cass County.	290880	July 19, 1979, Emerg.; August 5, 1985, Reg.; March 17, 2006, Susp.	March 16, 2006.
Do	Browning, City of, Linn County.	290619	July 25, 1975, Emerg.; September 18, 1985, Reg.; March 17, 2006, Susp.	January 19, 2006.
Do	Creighton, City of, Cass County.	290063	August 3, 1979, Emerg.; June 30, 1980, Reg.; March 17, 2006, Susp.	March 16, 2006.
Do	East Lynne, City of, Cass County.	290065	August 11, 1975, Emerg.; March 25, 1980, Reg.; March 17, 2006, Susp.	Do.
Do	Purcell, City of, Jasper County.	290539	September 3, 1975, Emerg.; September 19, 1984, Reg.; March 17, 2006, Susp.	Do.

State	Location	Community No.	Effective date of eligibility	Current effective map date
Suspension Rescissions				
Region V				
Minnesota	Boyd, City of, Lac Qui Parle County.	270240	March 17, 2006, Suspension Notice Rescinded.	March 16, 2006.
Do	Dawson, City of, Lac Qui Parle County.	270241	.....do	Do.
Ohio	Batavia, Village of, Clermont County.	390066	.....do	Do.
Do	Clermont County, Unincorporated Areas.	390065	.....do	Do.
Do	Milford, City of, Clermont and Hamilton Counties.	390227	.....do	Do.
Do	Neville, Village of, Clermont County.	390641	.....do	Do.
Do	South Point, Village of, Lawrence County.	390630	.....do	Do.
Region VII				
Missouri	Annapolis, City of, Iron County.	290763	.....do	February 16, 2006.
Do	Airport Drive, Village of, Jasper County.	290761	.....do	March 16, 2006.
Do	Belton, City of, Cass County	290062	.....do	Do.
Do	Carl Junction, City of, Jasper County.	290179	.....do	Do.
Do	Carterville, City of, Jasper County.	290180	.....do	Do.
Do	Carthage, City of, Jasper County.	290181	.....do	Do.
Do	Cass County, Unincorporated Areas.	290783	.....do	Do.
Do	Drexel, City of, Bates and Cass Counties.	290064	.....do	Do.
Do	Duenweg, City of, Jasper County.	290182	.....do	Do.
Do	Freeman, City of, Cass County.	290066	.....do	Do.
Do	Garden City, City of, Cass County.	290067	.....do	Do.
Do	Joplin, City of, Jasper and Newton Counties.	290183	.....do	Do.
Do	Lake Annette, City of, Cass County.	290953	.....do	Do.
Do	Oronogo, City of, Jasper County.	290185	.....do	Do.
Do	Peculiar, City of, Cass County	290878	.....do	Do.
Do	Pleasant Hill, City of, Cass County.	295269	.....do	Do.
Do	Raymore, City of, Cass County.	290070	.....do	Do.
Do	Sarcoxie, City of, Jasper County.	290186	.....do	Do.
Do	Strasburg, City of, Cass County.	290071	.....do	Do.
Do	Webb City, City of, Jasper County.	290187	.....do	Do.
Region VIII				
Utah	Coalville, City of, Summit County.	490135	.....do	Do.
Do	Henefer, Town of, Summit County.	490136	.....do	Do.
Do	Oakley, Town of, Summit County.	490138	.....do	Do.

* -do- =Ditto.

**Designates communities converted from Emergency Phase of participation to the Regular Phase of participation.

Code for reading fourth and fifth columns: Emerg.—Emergency; Reg.—Regular; Rein.—Reinstatement; Susp.—Suspension; With.—Withdrawn; NSFHA.—Non Special Flood Hazard Area.

(Catalog of Federal Domestic Assistance No. 83.100, ''Flood Insurance.'')

Dated: June 21, 2006.

Michael K. Buckley,

Deputy Director, Mitigation Division, Federal Emergency Management Agency, Department of Homeland Security.

[FR Doc. E6–11510 Filed 7–19–06; 8:45 am]

BILLING CODE 9110–12–P

DEPARTMENT OF STATE

48 CFR Part 652

[Public Notice 5469]

RIN 1400–AB90

Department of State Acquisition Regulation; Correction

AGENCY: Department of State.

ACTION: Correcting amendments.

SUMMARY: This document contains corrections to the final regulation published in the **Federal Register** of Friday, June 16, 2006 (71 FR 34836). The regulations related to changes to the Department of State Acquisition Regulation (DOSAR).

DATES: Effective on July 20, 2006.

FOR FURTHER INFORMATION CONTACT: Gladys Gines, 703–516–1691 (not a toll-free call); e-mail: *ginesgg@state.gov.*

SUPPLEMENTARY INFORMATION:

Background

The final regulations that are the subject of these corrections concerned the application of the Small Business Act to contracts awarded by domestic contracting activities where contract performance takes place overseas; and revised the coverage regarding the Defense Base Act. A new solicitation provision was added at 48 CFR 652.228–70, Defense Base Act—Covered Contractor Employees, and the contract clause and solicitation provision at 652.228–71, Workers' Compensation Insurance (Defense Base Act)—Services, and 652.228–74, Defense Base Act Insurance Rates—Limitation, were revised accordingly.

Need for Correction

As published, the final regulations did not include the dates of the clause and provisions at §§ 652.228–70, 652.228–71, and 652.228–74. Since contract clauses and solicitation provisions are subject to revision from time to time, all clauses and provisions are dated. To avoid confusion concerning which version of any provision or clause is operative in any given solicitation or contract, the date must be included when including clauses and provisions in contracts and solicitations.

List of Subjects in 48 CFR Part 652

Government procurement.

■ Accordingly, 48 CFR part 652 is corrected by making the following correcting amendments:

PART 652—SOLICITATION PROVISIONS AND CONTRACT CLAUSES

■ 1. The authority citation for part 652 continues to read as follows:

Authority: 40 U.S.C. 486(c); 22 U.S.C. 2658.

652.228–70 [Amended]

■ 2. Amend the date in the heading of the provision at § 652.228–70, Defense Base Act—Covered Contractor Employees, by removing ''(MO/YR)'' and inserting ''(JUN 2006)'' in its place.

652.228–71 [Amended]

■ 3. Amend the date in the heading of the clause at § 652.228–71, Workers' Compensation Insurance (Defense Base Act)—Services, by removing ''(MO/YR)'' and inserting ''(JUN 2006)'' in its place.

652.228–74 [Amended]

■ 4. Amend the date of the heading of the provision at § 652.228–74, Defense Base Act Insurance Rates—Limitation, by removing the reference ''(MO/YR)'' and inserting ''(JUN 2006)'' in its place.

Dated: July 13, 2006.

Kimberly Triplett,

Procurement Analyst, Bureau of Administration, Department of State.

[FR Doc. E6–11558 Filed 7–19–06; 8:45 am]

BILLING CODE 4710–24–P

DEPARTMENT OF COMMERCE

National Oceanic and Atmospheric Administration

50 CFR Part 622

[I.D. 071706B]

Fisheries of the Caribbean, Gulf of Mexico, and South Atlantic; Reef Fish Fishery of the Gulf of Mexico; Closure of the 2006 Tilefish Commercial Fishery

AGENCY: National Marine Fisheries Service (NMFS), National Oceanic and Atmospheric Administration (NOAA), Commerce.

ACTION: Temporary rule; closure.

SUMMARY: NMFS closes the commercial fishery for tilefish in the exclusive economic zone (EEZ) of the Gulf of Mexico. NMFS has determined that the tilefish quota for the commercial fishery will have been reached by July 21, 2006. This closure is necessary to protect the tilefish resource.

DATES: Closure is effective 12:01 a.m., local time, July 22, 2006, until 12:01 a.m., local time, on January 1, 2007.

FOR FURTHER INFORMATION CONTACT: Jason Rueter, telephone 727–824–5350, fax 727–824–5308, e-mail *Jason.Rueter@noaa.gov.*

SUPPLEMENTARY INFORMATION: The reef fish fishery of the Gulf of Mexico is managed under the Fishery Management Plan for the Reef Fish Resources of the Gulf of Mexico (FMP). The FMP was prepared by the Gulf of Mexico Fishery Management Council and is implemented under the authority of the Magnuson-Stevens Fishery Conservation and Management Act (Magnuson-Stevens Act) by regulations at 50 CFR part 622. Those regulations set the commercial quota for tilefish in the Gulf of Mexico at 440,000 lb (199,581 kg) for the current fishing year, January 1 through December 31, 2006.

Under 50 CFR 622.43(a), NMFS is required to close the commercial fishery for a species or species group when the quota for that species or species group is reached, or is projected to be reached, by filing a notification to that effect in the **Federal Register**. Based on current statistics, NMFS has determined that the available commercial quota of 440,000 lb (199,581 kg) for tilefish will be reached on or before July 21, 2006. Accordingly, NMFS is closing the commercial tilefish fishery in the Gulf of Mexico EEZ from 12:01 a.m., local time, on July 22, 2006, until 12:01 a.m., local time, on January 1, 2007. The operator of a vessel with a valid commercial vessel permit for Gulf reef fish having tilefish aboard must have landed and bartered, traded, or sold such tilefish prior to 12:01 a.m., local time, July 22, 2006.

During the closure, the bag and possession limits specified in 50 CFR 622.39(b) apply to all harvest or possession of tilefish in or from the Gulf of Mexico EEZ, and the sale or purchase of tilefish taken from the EEZ is prohibited. The prohibition on sale or purchase does not apply to sale or purchase of tilefish that were harvested, landed ashore, and sold prior to 12:01 a.m., local time, July 22, 2006, and were held in cold storage by a dealer or processor.

Classification

This action responds to the best available information recently obtained

from the fishery. The Assistant Administrator for Fisheries, NOAA, finds that the need to immediately implement this action to close the fishery constitutes good cause to waive the requirements to provide prior notice and opportunity for public comment pursuant to the authority set forth in 5 U.S.C. 553(b)(B), as such procedures would be unnecessary and contrary to the public interest. Similarly, there is a need to implement these measures in a timely fashion to prevent an overrun of the commercial quota of Gulf of Mexico tilefish, given the capacity of the fishing fleet to harvest the quota quickly. Any delay in implementing this action would be impractical and contrary to the Magnuson-Steven Act, the FMP, and the public interest. For these same reasons, NMFS finds good cause that the implementation of this action cannot be delayed for 30 days. Accordingly, under 5 U.S.C. 553(d), a delay in the effective date is waived.

This action is taken under 50 CFR 622.43(a) and is exempt from review under Executive Order 12866.

Authority: 16 U.S.C. 1801 *et seq.*

Dated: July 17, 2006.

Alan D. Risenhoover,

Acting Director, Office of Sustainable Fisheries, National Marine Fisheries Service.

[FR Doc. 06–6374 Filed 7–17–06; 2:17 pm]

BILLING CODE 3510–22–S

DEPARTMENT OF COMMERCE

National Oceanic and Atmospheric Administration

50 CFR Part 679

[Docket No. 060216045–6045–01; I.D. 071706A]

Fisheries of the Exclusive Economic Zone Off Alaska; Squid in the Bering Sea and Aleutian Islands Management Area

AGENCY: National Marine Fisheries Service (NMFS), National Oceanic and Atmospheric Administration (NOAA), Commerce.

ACTION: Temporary rule; prohibition of retention.

SUMMARY: NMFS is prohibiting retention of squid in the Bering Sea and Aleutian Islands management area (BSAI). NMFS is requiring that catch of squid in this area be treated in the same manner as prohibited species and discarded at sea with a minimum of injury. This action is necessary because the 2006 total allowable catch (TAC) of squid in the BSAI has been reached.

DATES: Effective 1200 hrs, Alaska local time (A.l.t.), July 17, 2006, until 2400 hrs, A.l.t., December 31, 2006.

FOR FURTHER INFORMATION CONTACT: Jennifer Hogan, 907–586–7228.

SUPPLEMENTARY INFORMATION: NMFS manages the groundfish fishery in the BSAI exclusive economic zone according to the Fishery Management Plan for Groundfish of the Bering Sea and Aleutian Islands Management Area (FMP) prepared by the North Pacific Fishery Management Council under authority of the Magnuson-Stevens Fishery Conservation and Management Act. Regulations governing fishing by U.S. vessels in accordance with the FMP appear at subpart H of 50 CFR part 600 and 50 CFR part 679.

The 2006 squid TAC in the BSAI is 1,084 metric tons as established by the 2006 and 2007 final harvest specifications for groundfish in the BSAI (71 FR 10894, March 3, 2006).

In accordance with § 679.20(d)(2), the Administrator, Alaska Region, NMFS, has determined that the 2006 squid TAC in the BSAI has been reached. Therefore, NMFS is requiring that further catches of squid in the BSAI be treated as a prohibited species in accordance with § 679.21(b).

Classification

This action responds to the best available information recently obtained from the fishery. The Assistant Administrator for Fisheries, NOAA, (AA), finds good cause to waive the requirement to provide prior notice and opportunity for public comment pursuant to the authority set forth at 5 U.S.C. 553(b)(B) as such a requirement is impracticable and contrary to the public interest. This requirement is impracticable and contrary to the public interest as it would prevent NMFS from responding to the most recent fisheries data in a timely fashion and would delay prohibiting retention of squid in the BSAI. NMFS was unable to publish a notice providing time for public comment because the most recent, relevant data only became available as of July 14, 2006.

The AA also finds good cause to waive the 30-day delay in the effective date of this action under 5 U.S.C. 553(d)(3). This finding is based upon the reasons provided above for waiver of prior notice and opportunity for public comment.

This action is required by § 679.20 and is exempt from review under Executive Order 12866.

Authority: 16 U.S.C. 1801 *et seq.*

Dated: July 17, 2006.

Alan D. Risenhoover,

Acting Director, Office of Sustainable Fisheries, National Marine Fisheries Service.

[FR Doc. 06–6375 Filed 7–17–06; 2:17 pm]

BILLING CODE 3510–22–S

Proposed Rules

Federal Register
Vol. 71, No. 139
Thursday, July 20, 2006

This section of the FEDERAL REGISTER contains notices to the public of the proposed issuance of rules and regulations. The purpose of these notices is to give interested persons an opportunity to participate in the rule making prior to the adoption of the final rules.

DEPARTMENT OF THE TREASURY

Office of Thrift Supervision

12 CFR Parts 563b and 575

[No. 2006–29]

RIN 1550–AC07

Stock Benefit Plans in Mutual-to-Stock Conversions and Mutual Holding Company Structures

AGENCY: Office of Thrift Supervision, Treasury.

ACTION: Notice of proposed rulemaking.

SUMMARY: The Office of Thrift Supervision (OTS) is proposing to clarify its regulations regarding stock benefit plans established after mutual-to-stock conversions or in mutual holding company structures. In addition, OTS proposes to reduce the voting requirements for the adoption of stock benefit plans in mutual holding company structures and to make several other minor changes to the regulations governing mutual-to-stock conversions and minority stock issuances.

DATES: Comments must be received on or before September 18, 2006.

ADDRESSES: You may submit comments, identified by No. 2006–29, by any of the following methods:

- *Federal eRulemaking Portal: http://www.regulations.gov.* Follow the instructions for submitting comments.
- *E-mail: regs.comments@ots.treas.gov.* Please include No. 2006–29 in the subject line of the message, and include your name and telephone number in the message.
- *Fax:* (202) 906–6518.
- *Mail:* Regulation Comments, Chief Counsel's Office, Office of Thrift Supervision, 1700 G Street, NW., Washington, DC 20552, Attention: No. 2006–29.
- *Hand Delivery/Courier:* Guard's Desk, East Lobby Entrance, 1700 G Street, NW., from 9 a.m. to 4 p.m. on business days, Attention: Regulation Comments, Chief Counsel's Office, Attention: No. 2006–29.

Instructions: All submissions received must include the agency name and docket number or Regulatory Information Number (RIN) for this rulemaking. All comments received will be posted without change to the OTS Internet site at: *http://www.ots.treas.gov/pagehtml.cfm?catNumber=67&an=1,* including any personal information provided.

Docket: For access to the docket to read background documents or comments received go to *http://www.ots.treas.gov/pagehtml.cfm?catNumber=67&an=1.* In addition, you may inspect comments at the Public Reading Room, 1700 G Street, NW., by appointment. To make an appointment for access, call (202) 906–5922, send an e-mail to *public.info@ots.treas.gov,* or send a facsimile transmission to (202) 906–7755. (Prior notice identifying the materials you will be requesting will assist us in serving you.) We schedule appointments on business days between 10 a.m. and 4 p.m. In most cases, appointments will be available the next business day following the date we receive a request.

FOR FURTHER INFORMATION CONTACT: Donald W. Dwyer, (202) 906–6414, Director, Applications, Examinations and Supervision—Operations; Aaron B. Kahn, (202) 906–6263, Assistant Chief Counsel, Business Transactions Division or David A. Permut, (202) 906–7505, Senior Attorney, Business Transactions Division, Office of Chief Counsel, Office of Thrift Supervision, 1700 G Street, NW., Washington, DC 20552.

SUPPLEMENTARY INFORMATION: Savings associations that propose to convert to stock form are subject to the OTS mutual-to-stock conversion regulations, 12 CFR part 563b (Conversion Regulations). Mutual holding companies (MHCs) are subject to OTS regulations at 12 CFR part 575 (MHC Regulations). Subsidiary mutual holding companies (Subsidiary MHCs) and savings associations (collectively, Subsidiary Companies) in MHC structures that propose to issue common stock in a minority stock issuance (Minority Stock Issuance) [1] are subject to both the Conversion Regulations and the MHC Regulations, including the provisions therein pertaining to stock benefit plans.[2]

OTS last changed the provisions of the Conversion Regulations addressing stock benefit plans in mutual-to-stock conversions or MHC structures in 2002 (2002 amendments).[3] The 2002 amendments revised the MHC Regulations to, among other things, permit the amount of stock includable in stock benefit plans established in MHC structures to be set as if 49.0 percent of the stock was issued to minority shareholders, and added a requirement that certain plans not exceed 25 percent of the stock actually offered in the Minority Stock Issuance. The 25 percent limitation was intended to ensure that insiders did not receive a disproportionate share of small Minority Stock Issuances.

OTS believes that confusion exists regarding the application of the stock benefit plan provisions in the Conversion Regulations and the MHC Regulations. OTS therefore proposes to clarify its regulations on stock benefit plans currently found at 12 CFR 563b.500 and 575.8. These clarifications are not intended to change existing OTS policies regarding stock benefit plans. In addition, OTS proposes to reduce regulatory burden by adjusting the voting requirements for the adoption of stock benefit plans in MHC structures. Also, OTS proposes to allow lower maximum purchase limitations in mutual-to-stock conversion offerings (Conversion Offerings) and in Minority Stock Issuances.

I. Stock Benefit Plans

OTS has permitted the establishment of three types of stock benefit plans in connection with mutual-to-stock conversions and Minority Stock Issuances. These stock benefit plans include: (i) Employee Stock Ownership Plans and similar plans (ESOPs), which must be tax-qualified; [4] (ii) Stock Option

[1] In a Minority Stock Issuance, the Subsidiary Company issues stock to entities other than the parent MHC. The parent MHC must hold more than 50 percent of the common stock of the Subsidiary MHC after the Minority Stock Issuance. See 12 U.S.C. 1467a(o)(8)(B) and 12 CFR 575.7(a)(5).

[2] The MHC Regulations currently include four separate provisions stating that the Conversion Regulations apply in the context of stock issuances by subsidiaries of MHCs. *See,* 12 CFR 575.7(a), 575.7(b)(1), 575.7(d)(6)(ii), and 575.7(e)(2006).

[3] See 67 FR 52010, at 52014 (August 9, 2002).

[4] These plans include 401(k) plans and plans defined at 12 CFR 563b.25 as tax-qualified

Continued

Plans (Option Plans), which are typically non-tax-qualified; and (iii) Management Recognition Plans (MRPs) (sometimes referred to as Retention and Recognition Plans), which are also typically non-tax-qualified.

Section 563b.500 of the Conversion Regulations sets forth certain limitations for stock benefit plans during the year following a Conversion Offering. For example, ESOPs and MRPs are generally limited to holding, in the aggregate, no more than ten percent of the number of shares issued in a mutual-to-stock conversion (§ 563b.500(a)(4)). However, if the converting institution has at least ten percent tangible capital following the completion of the conversion, then ESOPs and MRPs are permitted to hold up to an aggregate of 12 percent of the number of shares issued in the conversion (§ 563b.500(a)(4)). In addition, the Conversion Regulations (§ 563b.500(a)(3)) restrict MRPs to three percent of the number of shares issued in the conversion. If the institution has at least ten percent tangible capital following the completion of the conversion, however, MRPs may encompass four percent of the number of shares issued in the conversion. It has been OTS's experience that most converting associations implement an eight percent ESOP and a four percent MRP when they have at least ten percent tangible capital after the conversion.

In addition, converting associations may offer a separate Option Plan of up to ten percent of the number of shares issued in the conversion (§ 563b.500(a)(2)).

In MHC structures, Subsidiary Companies offer less than 50 percent of their stock to the public. This arrangement creates smaller stock benefit plans for companies in the MHC form. In order to make the MHC form of organization more reasonable, OTS expanded the permissible size of stock benefit plans in the 2002 amendments.[5] Prior to the 2002 amendments, the maximum size of plans was set in relation to the percentage of stock actually offered in the Minority Stock Issuance. For example, if the Subsidiary Company issued only 30 percent of its stock in the Minority Stock Issuance, it would have been restricted to an Option Plan encompassing three percent of total shares outstanding (ten percent of 30 percent) and a combined ESOP and MRP encompassing an aggregate of three percent of the total shares outstanding (or 3.6 percent, if the association's tangible capital exceeded ten percent). In the 2002 amendment, OTS set the maximum size for stock benefit plans as if the Minority Stock Issuance had been 49.0 percent of the Subsidiary Company's stock, regardless of the actual percentage of shares issued in the Minority Stock Issuance.[6]

The 2002 amendment also added an overall limitation, to prevent issuing an excessive amount of stock to management, particularly in small offerings. That restriction limited the aggregate amount of stock issued to all Option Plans and MRPs (but excluding ESOPs) in connection with any Minority Stock Issuance and all prior Minority Stock Issuances, to 25 percent of the outstanding stock of the association held by persons other than the parent MHC.[7] OTS has discovered that some persons incorrectly believed that the 25 percent limit was the only limit on the aggregate size of all Option Plans and MRPs, rather than one of several distinct limitations.

OTS believes that some confusion exists as to how the various limitations in the Conversion and MHC Regulations interact with each other. Therefore, OTS proposes to clarify several of the existing regulations at sections 563b.500, 575.7, and 575.8 to eliminate any confusion.

In addition, as discussed in more detail below, OTS believes that it is appropriate to adjust the shareholder vote requirements for the adoption of benefit plans in MHC structures.

A. Proposed Rule Changes at § 563b.500 Regarding Stock Benefit Plans

OTS proposes to clarify 12 CFR 563b.500 by referring to the specific type of plan addressed (that is, an ESOP, Option Plan, or MRP), rather than referring to plans in terms of their tax-qualified or non-tax-qualified nature. OTS proposes to revise § 563b.500(a)(1) to clarify that a shareholder vote is not required to establish an ESOP. OTS also proposes to move the provision addressing votes on Option Plans and MRPs in the context of MHCs from § 563b.500(a)(7) to the MHC Regulations, because it is more appropriate to locate provisions dealing exclusively with MHC structures in the MHC Regulations.

B. Proposed Rule Changes at § 575.7 Regarding Minority Stock Issuances

Section 575.7 sets forth the general requirements for Minority Stock Issuances by Subsidiary Companies. Section 575.7 provides, in four separate places, that some or all of the requirements of the Conversion Regulations are applicable to Minority Stock Issuances. OTS proposes to streamline the MHC Regulations by removing two of those references.

OTS proposes to retain the general provision at § 575.7(e), which would be redesignated as § 575.7(d), stating that the procedural and substantive requirements of the Conversion Regulations apply to Minority Stock Issuances unless clearly inapplicable. However, OTS proposes to add language to this section similar to the language in current § 575.7(b)(1) clarifying that OTS makes the determination whether a section is clearly inapplicable. OTS also proposes to relocate certain language from § 575.7(b)(1) to proposed § 575.7(d). The language in question states that for purposes of the provision the term ''conversion'' as it appears in the Conversion Regulations, refers to the Minority Stock Issuance, and the term ''converted or converting savings association'' as it appears in the Conversion Regulations, refers to the Subsidiary Company making the Minority Stock Issuance.

In light of these proposed changes, OTS proposes to eliminate the cross-references at §§ 575.7(a)[8] and

employee stock benefit plans. Because the only types of tax-qualified plans established in mutual-to-stock conversions in the recent past have been ESOPs, OTS proposes to define the tax-qualified plans as ESOPs, in order to simplify the regulations.

[5] 67 FR 52010, at 52014.

[6] Where a Subsidiary Company sets the size of a stock benefit plan as if it engaged in a 49 percent Minority Stock Issuance, a plan of the same type established in any second-step mutual-to-stock conversion of the relevant MHC must be based on not more than 51 percent of the resulting publicly held association's or holding company's issued and outstanding stock, following the consummation of the second-step conversion. See 12 CFR 563b.500(a). The stock issued and outstanding upon consummation of the second-step conversion includes both the stock issued in accordance with the mutual-to-stock conversion priorities for the second-step conversion and the shares issued in exchange for the shares held by the Subsidiary Company's minority stockholders.

If the Subsidiary Company sets the size of the stock benefit plan based on a percentage less than 49 percent (such as the actual percentage issued in the Minority Stock Issuance), then the same principle applies. For example, if a Subsidiary Company established plans based on an actual 40 percent Minority Stock Issuance, then the plans established in connection with the second-step conversion must be based on not more than 60 percent of the shares to be issued in the second-step conversion. This is the case regardless of whether, after the Minority Stock Issuance, the Subsidiary Company repurchased shares of its stock (and therefore more than 60 percent of the shares that will be issued and outstanding upon consummation of the second-step conversion would be issued in accordance with the mutual-to-stock conversion priorities).

[7] For example, the overall limitation for a 28 percent Minority Stock Issuance would be no more than seven percent for the Option Plan and MRP (25 percent of 28 percent equals seven percent) for the proposed issuance, plus all prior issuances.

[8] Eliminating the cross-reference in § 575.7(a) does not remove the requirement that MHCs must file business plans in connection with Minority

575.7(b)(1). OTS proposes to keep the reference at § 575.7(d)(6)(ii), however, because the cross-reference permits an applicant to engage in a Minority Stock Issuance that does not meet the mutual-to-stock conversion priorities if the applicant demonstrates that a non-conforming issuance is appropriate.

OTS proposes to revise and relocate § 575.7(b)(2). This section provides that, unless OTS determines otherwise, the limitations on the minimum and maximum amounts of the estimated price range required by 12 CFR 563b.330 do not apply. OTS has applied the limitations in 12 CFR 563b.330 in all Minority Stock Issuances, except in cases where the issuance involved only stock benefit plans or an acquisition. Accordingly, OTS proposes to revise this section to state that § 563b.330 will apply to Minority Stock Issuances, unless OTS determines otherwise, and to recodify this provision, as modified, at § 575.7(a)(9).

OTS proposes to eliminate 12 CFR 575.7(b)(3), which requires stock offering materials to disclose the amount of any discount on minority stock, and how the amount of the discount was determined. The general securities offering disclosure requirements, which require disclosure of material information, are sufficient to address the issue of disclosure of the amount and reasons for any discount on minority stock.

C. Proposed Rule Changes at § 575.8 Regarding Stock Benefit Plans

Section 575.8 contains the current limitations for stock benefit plans in MHC structures. OTS proposes to clarify the § 575.8 provisions pertaining to stock benefit plans in several respects. First, as with § 563b.500, OTS proposes to replace the references to tax-qualified and non-tax-qualified benefit plans in § 575.8(a) with references to a specific type of plan (that is, the ESOP, Option Plan, or MRP). Second, OTS proposes to include language in § 575.8 stating that the quantitative limitations regarding the size of ESOPs, Option Plans, and MRPs set forth in § 575.8 supersede the related quantitative limits in proposed sections 563b.500(a)(2) through 563b.500(a)(4). This change should reduce regulatory burden by eliminating the need for Subsidiary Companies to consider both the MHC Regulations and the Conversion Regulations to determine the permissible size of certain stock benefit plans. Third, in order to provide clarity and to reduce existing regulatory burdens, OTS proposes to amend § 575.8 to state that the restrictions set forth in proposed sections 563b.500(a)(4) through 563b.500(a)(14) apply in the context of a Minority Stock Issuance for only one year after the Subsidiary Company engages in a Minority Stock Issuance that is conducted in accordance with the purchase priorities set forth in the Conversion Regulations. Each such Minority Stock Issuance would start a new one-year period.

In order to further clarify the MHC Regulations and to eliminate certain unintended inconsistencies between the Conversion Regulations and the MHC Regulations, OTS is making three additional changes. First, the Conversion Regulations (at current § 563b.500(a)(3) and proposed § 563b.500(a)(3)(ii)) include a separate limitation regarding the size of MRPs. Notwithstanding the lack of a specific provision in the MHC Regulations addressing MRPs, OTS has consistently applied such a requirement in the context of Minority Stock Issuances, by applying the plan limits in the Conversion Regulations to Minority Stock Issuances.[9] Therefore, OTS proposes to include a corresponding limitation on the size of MRPs in § 575.8.

Second, the Conversion Regulations (at current § 563b.500(a)(4), and proposed § 563b.500(a)(3)(i)) include a limitation on the combined size of the ESOP and MRP. The current MHC Regulations do not include an aggregate limitation on ESOPs and MRPs. However, OTS has consistently applied such a restriction to Minority Stock Issuances, based on the cross-reference to the Conversion Regulations. In order to conform the MHC Regulations to the Conversion Regulations, OTS proposes to revise the MHC Regulations to explicitly include an aggregate limitation on ESOPs and MRPs. In addition to aggregate limitations on ESOPs and MRPs, OTS proposes to retain the existing aggregate limitation on the size of the Option Plans and MRPs set forth at § 575.8(a)(9) of the MHC Regulations.

Third, the Conversion Regulations impose a higher limitation on the size of MRPs and a higher aggregate limitation on the size of ESOPs and MRPs if the association in question has tangible capital exceeding ten percent. Again, OTS consistently has applied this provision of the Conversion Regulations to Minority Stock Issuances. The MHC Regulations do not include a corresponding provision, and OTS proposes to amend the MHC Regulations to eliminate this disparity.

Furthermore, OTS believes that the presence of language addressing individual purchase limitations (and those involving individuals and their associates) in sections 575.8(a)(3) and (a)(4) is confusing. These provisions, to the extent they pertain to individuals and their associates, are unnecessary because the Conversion Regulations provide the necessary limitations.[10] In addition, the usefulness of such provisions in the MHC regulations is limited, because the limitations in §§ 575.8(a)(3) and (a)(4) do not include shares acquired in the secondary market. Accordingly, OTS proposes to eliminate the reference to purchases by individuals and their associates presently set forth in sections 575.8(a)(3) and (a)(4) from the MHC Regulations.

In addition, OTS is clarifying sections 575.8(a)(3) through (a)(9) to make it clear that the limitations on benefit plans will be set in relation to the stock or equity outstanding at the close of the most recent Minority Stock Issuance made in conjunction with the promulgation of a benefit plan. Also, in sections 575.8(a)(7), OTS is clarifying that, when a plan is adopted or modified more than one year after a Minority Stock Issuance, the limitations in sections 575.8(a)(3) through (a)(6) may be exceeded to the extent that: (i) Awards in excess of those limitations are made with stock purchased in the secondary market; and (ii) such purchases take place at least one year after the most recent Minority Stock Issuance that is made in substantial conformity with the purchase priorities set out in part 563b.

Similarly, in § 575.8(a)(8)(ii), OTS proposes to clarify that when a plan is adopted or modified more than one year after a Minority Stock Issuance, the limitations in § 575.8(a)(8)(i) may be exceeded to the extent that: (i) Awards in excess of those limitations are made with stock purchased in the secondary market; and (ii) such purchases take place at least one year after the most recent Minority Stock Issuance that is made in substantial conformity with the purchase priorities set out in part 563b.

In addition, in § 575.8(a)(9), OTS proposes to clarify that the limitation therein presents a separate limitation on

Stock Issuances. Under proposed § 575.7(d), all procedural and substantive requirements in the Conversion Regulations apply to Minority Stock Issuances, unless clearly inapplicable.

[9] Because OTS proposes to simplify the MHC Regulations to provide that institutions proposing Minority Stock Issuances would need to look only at § 575.8 to determine the permissible size of their stock benefit plans, repeating this restriction, and the restrictions described below, in the MHC Regulations is necessary.

[10] See 12 CFR 563b.370 (2006).

Option Plans and MRPs that applies to each Minority Stock Issuance. However, that limitation does not require reductions in otherwise permissible awards under an existing plan when there is a subsequent Minority Stock Issuance where the excess results from intervening purchases by individuals in the secondary market.

As mentioned previously, OTS proposes to move the last sentence in current § 563b.500(a)(7), pertaining to mutual holding companies, to new § 575.8(c). This sentence currently requires that a majority of the outstanding minority shares approve any Option Plan and any MRP (in addition to the requirement that a majority of all shares approve any Option Plan and any MRP). Because OTS believes the current provisions are unduly restrictive, OTS proposes two changes to the minority vote requirement proposed at § 575.8(c). First, OTS proposes to revise the provision to require a vote of the minority shareholders only during the first year after a Minority Stock Issuance that was conducted in accordance with the mutual-to-stock conversion subscription priorities. Second, OTS proposes to revise the provision to require approval (during the first year after a Minority Stock Issuance) by a majority of the minority shares voting on the issue of adoption of the plan, rather than a majority of the outstanding minority shares.

II. Maximum Purchase Limitation

OTS proposes to increase an institution's choices regarding maximum purchase limitations. Section 563b.385 addresses maximum purchase limitations for subscriptions in mutual-to-stock conversions. Currently, converting savings associations are permitted to set a maximum purchase limitation between one and five percent of the stock sold. OTS has received many requests to waive the purchase limitations. This is particularly appropriate in the case of larger offerings, where a one percent limit would constitute a very large investment. Because OTS's policy is to achieve as widespread a distribution of stock as possible (see § 563b.395), the request for a waiver to set a smaller maximum purchase limitation is often granted. OTS proposes to amend this section to permit smaller purchase limitations.

III. Solicitation of Comments

A. Solicitation of Comments on the Proposed Amendments

OTS is requesting comment on all aspects of the proposed regulation. Specifically OTS seeks comment on:

(1) Does the proposed regulation accomplish its stated purposes?

(2) Does the proposed regulation eliminate ambiguities regarding stock benefit plans in mutual-to-stock conversions?

(3) Does the proposed regulation create any ambiguities that were not present in the current regulation?

(4) Does the proposed regulation impose unnecessary regulatory burdens?

B. Solicitation of Comments Regarding the Use of Plain Language

Section 722 of GLBA requires Federal banking agencies to use ''plain language'' in all proposed and final rules published after January 1, 2000. OTS invites comments on how to make this proposed rule easier to understand. For example:

(1) Have we organized the material to suit your needs? If not, how could we better organize it?

(2) Do we clearly state the requirements in the rule? If not, how could we state the rule more clearly?

(3) Does the rule contain technical language or jargon that is not clear? If so, what language requires clarification?

(4) Would a different format (grouping and order of sections, use of headings, paragraphing) make the rule easier to understand? If so, what changes to the format would make the rule easier to understand?

V. Regulatory Findings

A. Paperwork Reduction Act

OTS has determined that this proposed rule does not involve a change to collections of information previously approved under the Paperwork Reduction Act (44 U.S.C. 3501 *et seq.*).

B. Executive Order 12866

The Director of OTS has determined that this proposed rule does not constitute a ''significant regulatory action'' for purposes of Executive Order 12866.

C. Regulatory Flexibility Act

Pursuant to section 605(b) of the Regulatory Flexibility Act (RFA) (5 U.S.C. 601), the Director certifies that this proposed rule will not have a significant economic impact on a substantial number of small entities. The proposed rule would make certain changes that should reduce burdens on all savings associations, including small institutions. First, the proposed rule addresses the confusion surrounding compliance with OTS regulations regarding stock benefit plans in connection with mutual-to-stock conversions and Minority Stock Issuances. These clarifications will reduce the burden of complying with the OTS regulations on stock benefit plans. Second, OTS has reduced the voting requirement to adopt stock benefit plans in MHC structures, which reduces burden on institutions establishing stock benefit plans. Finally, the proposed rule will reduce burden by broadening the purchase limitations, thereby promoting a wider distribution of stock in a Conversion Offering or Minority Stock Issuance. All of the proposed changes are minor and should not have a significant impact on small institutions. Accordingly, OTS has determined that a Regulatory Flexibility Analysis is not required.

D. Unfunded Mandates Reform Act of 1995

OTS has determined that the proposed rule will not result in expenditures by state, local, or tribal governments or by the private sector of $100 million or more and that a budgetary impact statement is not required under section 202 of the Unfunded Mandates Reform Act of 1995, Public Law 104–4 (Unfunded Mandates Act). The proposed rule would make certain changes that should reduce burdens on savings associations. First, the proposed rule clarifies OTS regulations regarding stock benefit plans in connection with mutual-to-stock conversions and Minority Stock Issuances, which should reduce the burden of complying with the OTS regulations on stock benefit plans. Second, OTS has reduced the voting requirement to adopt stock benefit plans in MHC structures, which reduces burden on institutions establishing stock benefit plans. Finally, the proposed rule will reduce burden by broadening the purchase limitations, to promote a wider distribution of stock in a Conversion Offering or Minority Stock Issuance. All of the proposed changes are minor and should not have a significant impact on small institutions. Accordingly, a budgetary impact statement is not required under section 202 of the Unfunded Mandates Act.

List of Subjects

12 CFR Part 563b

Reporting and recordkeeping requirements, Savings associations, Securities.

12 CFR Part 575

Administrative practice and procedure, Capital, Holding companies, Reporting and recordkeeping requirements, Savings associations, Securities.

Accordingly, the Office of Thrift Supervision proposes to amend Chapter V of title 12 of the Code of Federal Regulations, as set forth below.

PART 563b—CONVERSIONS FROM MUTUAL TO STOCK FORM

1. The authority citation for part 563b continues to read as follows:

Authority: 12 U.S.C. 1462, 1462a, 1463, 1464, 1467a, 2901; 15 U.S.C. 78c, 78l, 78m, 78n, 78w.

§ 563b.385 [Amended]

2. Amend § 563b.385(a) by removing the phrase ''between one percent and'' and adding the words ''up to'' in place thereof.

3. Revise § 563b.500 to read as follows:

§ 563b.500. What management stock benefit plans may I implement?

(a) During the 12 months after your conversion, you may implement a stock option plan (Option Plan), an employee stock ownership plan or other tax-qualified employee stock benefit plan (collectively, ESOP), and a management recognition plan (MRP), provided you meet all of the following requirements.

(1) You disclose the plans in your proxy statement and offering circular and indicate in your offering circular that there will be a separate shareholder vote on the Option Plan and the MRP at least six months after the conversion. No shareholder vote is required to implement the ESOP. Your ESOP must be tax-qualified.

(2) Your Option Plan does not encompass more than ten percent of the number of shares that you issued in the conversion.

(3)(i) Your ESOP and MRP do not encompass, in the aggregate, more than ten percent of the number of shares that you issued in the conversion. If you have tangible capital of ten percent or more following the conversion, OTS may permit your ESOP and MRP to encompass, in the aggregate, up to 12 percent of the number of shares issued in the conversion; and

(ii) Your MRP does not encompass more than three percent of the number of shares that you issued in the conversion. If you have tangible capital of ten percent or more after the conversion, OTS may permit your MRP to encompass up to four percent of the number of shares that you issued in the conversion.

(4) No individual receives more than 25 percent of the shares under your ESOP, MRP, or Option Plan.

(5) Your directors who are not your officers do not receive more than five percent of the shares of your MRP or Option Plan individually, or 30 percent of any such plan in the aggregate.

(6) Your shareholders approve each of the Option Plan and the MRP by a majority of the total votes eligible to be cast at a duly called meeting before you establish or implement the plan. You may not hold this meeting until six months after your conversion.

(7) When you distribute proxies or related material to shareholders in connection with the vote on a plan, you state that the plan complies with OTS regulations and that OTS does not endorse or approve the plan in any way. You may not make any written or oral representations to the contrary.

(8) You do not grant stock options at less than the market price at the time of grant.

(9) You do not fund the Option Plan or the MRP at the time of the conversion.

(10) Your plan does not begin to vest earlier than one year after shareholders approve the plan, and does not vest at a rate exceeding 20 percent per year.

(11) Your plan permits accelerated vesting only for disability or death, or if you undergo a change of control.

(12) Your plan provides that your executive officers or directors must exercise or forfeit their options in the event the institution becomes critically undercapitalized (as defined in § 565.4 of this chapter), is subject to OTS enforcement action, or receives a capital directive under § 565.7 of this chapter.

(13) You file a copy of the proposed Option Plan or MRP with OTS and certify to OTS that the plan approved by the shareholders is the same plan that you filed with, and disclosed in, the proxy materials distributed to shareholders in connection with the vote on the plan.

(14) You file the plan and the certification with OTS within five calendar days after your shareholders approve the plan.

(b) You may provide dividend equivalent rights or dividend adjustment rights to allow for stock splits or other adjustments to your stock in your ESOP, MRP, and Option Plan.

(c) The restrictions in paragraph (a) do not apply to plans implemented more than 12 months after the conversion, provided that materials pertaining to any shareholder vote regarding such plans are not distributed within the 12 months after the conversion. If a plan adopted in conformity with paragraph (a) is amended more than 12 months following your conversion, your shareholders must ratify any material deviations to the requirements in paragraph (a) of this section.

PART 575—MUTUAL HOLDING COMPANIES

4. The authority citation for part 575 continues to read as follows:

Authority: 12 U.S.C. 1462, 1462a, 1463, 1464, 1467a, 1828, 2901.

§ 575.7 [Amended]

5. Amend § 575.7(a) by removing the first sentence.

6. In § 575.7(b), redesignate paragraph (b)(2) as (a)(9) and remove the word ''not'' in that paragraph, remove the remaining text in paragraph (b), redesignate paragraphs (c), (d), and (e) as paragraphs (b), (c), and (d), and revise newly designated paragraph (d) to read as follows:

(d) *Procedural and substantive requirements.* The procedural and substantive requirements of 12 CFR part 563b shall apply to all mutual holding company stock issuances under this section, unless clearly inapplicable, as determined by OTS. For purposes of this paragraph (d), the term *conversion* as it appears in the provisions of part 563b of this chapter shall refer to the stock issuance, and the term *converted* or *converting savings association* shall refer to the savings association undertaking the stock issuance.

7. Revise paragraphs (a)(3) through (a)(9) of § 575.8 to read as follows:

§ 575.8 Contents of stock issuance plans.

(a) Mandatory provisions. * * *

* * * * *

(3) Provide that all employee stock ownership plans (ESOPs) must not encompass, in the aggregate, more than either 4.9 percent of the outstanding shares of the savings association's common stock or 4.9 percent of the savings association's stockholders' equity at the close the proposed issuance.

(4) Provide that all ESOPs and management recognition plans (MRPs) must not encompass, in the aggregate, more than either 4.9 percent of the outstanding shares of the savings association's common stock or 4.9 percent of the savings association's stockholders' equity at the close of the proposed issuance. However, if the savings association's tangible capital equals at least ten percent at the time of implementation of the plan, OTS may permit such ESOPs and MRPs to

encompass, in the aggregate, up to 5.88 percent of the outstanding common stock or stockholders' equity at the close of the proposed issuance.

(5) Provide that all MRPs must not encompass, in the aggregate, more than either 1.47 percent of the common stock of the savings association or 1.47 percent of the savings association's stockholders' equity at the close of the proposed issuance. However, if the savings association's tangible capital is at least ten percent at the time of implementation of the plan, OTS may permit MRPs to encompass, in the aggregate, up to 1.96 percent of the outstanding shares of the savings association's common stock or 1.96 percent of the savings association's stockholders' equity at the close of the proposed issuance.

(6) Provide that all stock option plans (Option Plans) must not encompass, in the aggregate, more than either 4.9 percent of the savings association's outstanding common stock at the close of the proposed issuance or 4.9 percent of the savings association's stockholders' equity at the close of the proposed issuance.

(7) A plan modified or adopted no earlier than one year after the close of the proposed issuance, or any subsequent issuance that is made in substantial conformity with the purchase priorities set forth in Part 563b, may exceed the percentage limitations contained in paragraphs 3 through 6 (plan expansion), subject to the following two requirements. First, all common stock awarded in connection with any plan expansion must be acquired for such awards in the secondary market. Second, such acquisitions must begin no earlier than when such plan expansion is permitted to be made.

(8)(i) Provide that the aggregate amount of common stock that may be encompassed under all Option Plans and MRPs, or acquired by all insiders of the association and associates of insiders of the association, must not exceed the following percentages of common stock or stockholders' equity of the savings association, held by persons other than the savings association's mutual holding company parent at the close of the proposed issuance:

Institution size	Officer and director purchases (percent)
$50,000,000 or less	35
$50,000,001–100,000,000	34
$100,000,001–150,000,000	33
$150,000,001–200,000,000	32
$200,000,001–250,000,000	31
$250,000,001–300,000,000	30
$300,000,001–350,000,000	29
$350,000,001–400,000,000	28
$400,000,001–450,000,000	27
$450,000,001–500,000,000	26
Over $500,000,000	25

(ii) The percentage limitations contained in paragraph 8(i) may be exceeded provided that all stock acquired by insiders and associates of insiders or awarded under all MRPs and Option Plans in excess of those limitations is acquired in the secondary market. If acquired for such awards on the secondary market, such acquisitions must begin no earlier than one year after the close of the proposed issuance or any subsequent issuance that is made in substantial conformity with the purchase priorities set forth in part 563b.

(iii) In calculating the number of shares held by insiders and their associates under this provision, shares awarded but not delivered under an ESOP, MRP, or Option Plan that are attributable to such persons shall not be counted as being acquired by such persons.

(9) Provide that the amount of common stock that may be encompassed under all Option Plans and MRPs must not exceed, in the aggregate, 25 percent of the outstanding common stock held by persons other than the savings association's mutual holding company parent at the close of the proposed issuance.

8. Add a new paragraph (c) to § 575.8, to read as follows.

(c) *Applicability of provisions of § 563b.500(a) to minority stock issuances.* Notwithstanding § 575.7(d) of this part, §§ 563b.500(a)(2) and (3) do not apply to minority stock issuances, because the permissible sizes of ESOPs, MRPs, and Option Plans in minority stock issuances are subject to each of the requirements set forth at paragraphs (a)(3) through (a)(9) of this section. Sections 563b.500(a)(4) though (a)(14) apply for one year after the savings association engages in a minority stock issuance that is conducted in accordance with the purchase priorities set forth in part 563b. In addition to the shareholder vote requirement for Option Plans and MRPs set forth at § 563b.500(a)(6), any Option Plans and MRPs put to a shareholder vote during the year after a minority stock issuance that is conducted in accordance with the purchase priorities set forth in part 563b must be approved by a majority of the votes cast by stockholders other than the mutual holding company.

Dated: July 11, 2006.

By the Office of Thrift Supervision.

John M. Reich,

Director.

[FR Doc. E6–11278 Filed 7–19–06; 8:45 am]

BILLING CODE 6720–01–P

DEPARTMENT OF TRANSPORTATION

Federal Aviation Administration

14 CFR Part 33

[Docket No. FAA–2006–25375; Notice No. 06–09]

RIN 2120–AI73

Airworthiness Standards; Engine Bird Ingestion

AGENCY: Federal Aviation Administration (FAA), DOT.

ACTION: Notice of proposed rulemaking (NPRM).

SUMMARY: The FAA is proposing to amend the aircraft turbine engine type certification standards to reflect recent analysis of the threat flocking birds present to turbine engine aircraft. These proposed changes would also harmonize FAA, Joint Aviation Authority (JAA), and European Aviation Safety Agency (EASA) bird ingestion standards for aircraft turbine engines type certificated by the United States and the JAA/EASA countries, and simplify airworthiness approvals for import and export. These proposed changes are necessary to establish uniform international standards that provide an adequate level of safety for aircraft turbine engines with respect to the current large flocking bird threat.

DATES: Send your comments on or before September 18, 2006.

ADDRESSES: You may send comments [identified by Docket Number FAA–2006–25375] using any of the following methods:

- DOT Docket Web site: Go to *http://dms.dot.gov* and follow the instructions for sending your comments electronically.
- Government-wide rulemaking Web site: Go to *http://www.regulations.gov* and follow the instructions for sending your comments electronically.
- Mail: Docket Management Facility; U.S. Department of Transportation, 400 Seventh Street, SW., Nassif Building, Room PL–401, Washington, DC 20590–0001.
- Fax: 1–202–493–2251.
- Hand Delivery: Room PL–401 on the plaza level of the Nassif Building,

400 Seventh Street, SW., Washington, DC, between 9 a.m. and 5 p.m., Monday through Friday, except Federal holidays.

For more information on the rulemaking process, see the **SUPPLEMENTARY INFORMATION** section of this document.

Privacy: We will post all comments we receive, without change, to *http://dms.dot.gov,* including any personal information you provide. For more information, see the Privacy Act discussion in the **SUPPLEMENTARY INFORMATION** section of this document.

Docket: To read background documents or comments received, go to *http://dms.dot.gov* at any time or to Room PL–401 on the plaza level of the Nassif Building, 400 Seventh Street, SW., Washington, DC, between 9 a.m. and 5 p.m., Monday through Friday, except Federal holidays.

FOR FURTHER INFORMATION CONTACT: Marc Bouthillier, Rulemaking and Policy Branch, Engine and Propeller Directorate, ANE–111, Federal Aviation Administration, 12 New England Executive Park, Burlington, Massachusetts 01803; telephone (781) 238–7196; facsimile (781) 238–7199; e-mail *marc.bouthillier@faa.gov.*

SUPPLEMENTARY INFORMATION:

Comments Invited

The FAA invites interested persons to participate in this rulemaking by submitting written comments, data, or views. We also invite comments relating to the economic, environmental, energy, or federalism impacts that might result from adopting the proposals in this document. The most helpful comments reference a specific portion of the proposal, explain the reason for any recommended change, and include supporting data. We ask that you send us two copies of written comments.

We will file in the docket all comments we receive, as well as a report summarizing each substantive public contact with FAA personnel concerning this proposed rulemaking. The docket is available for public inspection before and after the comment closing date. If you wish to review the docket in person, go to the address in the **ADDRESSES** section of this preamble between 9 a.m. and 5 p.m., Monday through Friday, except Federal holidays. You may also review the docket using the Internet at the Web address in the **ADDRESSES** section.

Privacy Act: Using the search function of our docket Web site, anyone can find and read the comments received into any of our dockets, including the name of the individual sending the comment (or signing the comment on behalf of an association, business, labor union, etc.). You may review DOT's complete Privacy Act Statement in the **Federal Register** published on April 11, 2000 (65 FR 19477–78) or you may visit *http://dms.dot.gov.*

Before acting on this proposal, we will consider all comments we receive on or before the closing date for comments. We will consider comments filed late if it is possible to do so without incurring expense or delay. We may change this proposal in light of the comments we receive.

If you want the FAA to acknowledge receipt of your comments on this proposal, include with your comments a pre-addressed, stamped postcard on which the docket number appears. We will stamp the date on the postcard and mail it to you.

Proprietary or Confidential Business Information

Do not file in the docket information that you consider to be proprietary or confidential business information. Send or deliver this information directly to the person identified in the **FOR FURTHER INFORMATION CONTACT** section of this document. You must mark the information that you consider proprietary or confidential. If you send the information on a disk or CD–ROM, mark the outside of the disk or CD–ROM and also identify electronically within the disk or CD–ROM the specific information that is proprietary or confidential.

Under 14 CFR 11.35(b), when we are aware of proprietary information filed with a comment, we do not place it in the docket. We hold it in a separate file to which the public does not have access, and place a note in the docket that we have received it. If we receive a request to examine or copy this information, we treat it as any other request under the Freedom of Information Act (5 U.S.C. 552). We process such a request under the DOT procedures found in 49 CFR part 7.

Availability of Rulemaking Documents

You can get an electronic copy using the Internet by:

(1) Searching the Department of Transportation's electronic Docket Management System (DMS) Web page (*http://dms.dot.gov/search*);

(2) Visiting the FAA's Regulations and Policies Web page at *http://www.faa.gov/regulations_policies/*; or

(3) Accessing the Government Printing Office's Web page at *http://www.gpoaccess.gov/fr/index.html.*

You can also get a copy by sending a request to the Federal Aviation Administration, Office of Rulemaking, ARM–1, 800 Independence Avenue, SW., Washington, DC 20591, or by calling (202) 267–9680. Make sure to identify the docket number, notice number, or amendment number of this rulemaking.

Executive Summary

The FAA adopted new regulations under 14 CFR 33.76 on September 5, 2000, to better address the overall bird ingestion threat. These requirements were adopted, in part, as a response to a National Transportation Safety Board (NTSB) recommendation (Number A–76–64), which recommended an increase in the level of bird ingestion capability for aircraft engines. These requirements were published as Amendment 20 to part 33, § 33.76, in December 2000.

In that final rule, the FAA also agreed to study the bird threat further and to consider additional rulemaking to address larger flocking birds, since certification requirements did not address the threat that either birds bigger than 1.15 kg (2.5 lbs) or their growing population, presented to engine operational safety. In 2001, the FAA initiated a contract to collect and analyze data, and reported its findings in DOT/FAA Report No. DOT/FAA/AR–TN03/60, ''Study of Bird Ingestions into Aircraft Turbine Engines (1968–1999)''. The report summarized the historical bird threat and resulting impact to flight safety, based on bird ingestion data collected and analyzed for the 30-year period ending in 1999.

The Transport Airplane and Engine Issues Group (TAEIG), and its Engine Harmonization Working Group (EHWG) utilized the report discussed above and reported back to the FAA's Aviation Rulemaking Advisory Committee (ARAC) on January 6, 2003 with its results and its proposed additional part 33 requirements. The ARAC adopted the working group's recommendations. This NPRM reflects the ARAC recommendations.

The ARAC's proposed revision to § 33.76 would add a new requirement that addresses large flocking birds weighing more than 1.15 kg (2.5 lbs) and up to 3.65 kg (8 lbs). The proposal contains extensive common language between part 33 and JAR–E (now CS–E). However, these strengthened requirements for the certification of the engines may not be adequate to meet the safety objective in the future, if the quantity of these birds or their movement near airports significantly increases when compared to the present situation.

This proposed rule may be considered safety significant relative to the

requirements of § 21.101, Designation of Applicable Regulations for Changes to Type Certificates.

Background

The EHWG reviewed the current § 33.76 bird ingestion requirements, related advisory material, and the current bird threat. It considered the industry data concerning bird threat trend analysis, including all reasonably predictable changes to the current threat, and if the current rule adequately meets its stated safety objective. The working group also considered potential changes in the threat from increased populations of particular bird species, actions intended to control populations around airports, and flight-crew training for flocking-bird recognition and avoidance. Finally, the working group recommended changes to § 33.76 and the corresponding JAR–E regulation to address inadequacies in the current rule and related advisory material.

The recommendations are based on the following:

Industry Study

The industry study covers a thirty year period of worldwide non-military service experience of small, medium and large turbofan and turbojet engines, including two, three and four engine aircraft, over 325 million aircraft departures, and about 340 events involving ingestions of large flocking birds (over 1.15 kg [2.5 lbs mass]). The study did not include data from aircraft manufactured or flown in the former Soviet Union and Eastern European countries, since that data was unavailable.

The study concluded that the proposed rule should address the dual-engine power loss hazard, since the data indicated that more-than-two-engine loss of power events are extremely improbable. The study also produced a characterization of the threat and consequences of bird ingestion. As a result of that analysis, the ARAC identified flocking bird encounter threats more severe than specifically addressed under current § 33.76. Throughout the study, birds were identified by species, and an average mass for that species was assigned. All references to bird mass reflect the average mass for the species classification. The following are summaries for different inlet throat areas.

1. *Observations for Turbine Engines With Inlet Throat Areas Larger Than 3.9 m²:*

• No multi-engine power loss events with catastrophic aircraft consequences involving birds larger than 1.15 kg (2.5 lbs) have occurred. However, these events are currently predicted to occur at the rate of 1E–9 per aircraft flight hour, based on the power loss probabilities for smaller size engines. This is a conservative approach, since the power loss probability for this size engine is expected to be better than the smaller engines because of their inherently more robust design regarding foreign object damage, and because there was not enough service history data for this size engine to calculate the probability without considering the smaller size engine data.

• No multi-engine ingestion events for bird classifications larger than 1.15 kg (2.5 lbs) have occurred.

2. *Observations for Turbine Engines With Inlet Throat Areas Between 3.5 and 3.9 m²:*

• No multi-engine power loss events with catastrophic aircraft consequences involving birds larger than 1.15 kg (2.5 lbs) have occurred. However, these events are currently predicted to occur at the rate of about 1.1E–9 per aircraft flight hour.

• Multi-engine ingestions of flocking birds larger than 1.15 kg (2.5 lbs) have occurred at a rate of 7.4E–8 per aircraft flight hour.

• No multi-engine ingestion events for bird classifications larger than 3.65 kg (8 lbs) have occurred.

3. *Observations for Turbine Engines With Inlet Throat Areas Between 2.5 and 3.5 m²:*

• No multi-engine power loss events with catastrophic aircraft consequences have occurred with birds larger than 1.15 kg (2.5 lbs). However, these events are currently predicted to occur at the rate of 1.5E–9 per aircraft flight hour.

• Multi-engine ingestions of flocking birds larger than 1.15 kg (2.5 lbs) have occurred at a rate of 2.2E–8 per aircraft flight hour.

• No multi-engine ingestion events for bird classifications larger than 1.5 kg (3.3 lbs) have occurred.

4. *Observations for Turbine Engines With Inlet Throat Areas Between 1.35 and 2.5 m²:*

• No multi-engine power loss events with catastrophic aircraft consequences have occurred with birds larger than 1.15 kg (2.5 lbs). However these events are currently predicted to occur at the rate of 2.8E–10 per aircraft flight hour.

• No multi-engine ingestions of flocking birds larger than 1.15 kg (2.5 lbs) have occurred (one ground event did occur after landing).

5. *Observations for Turbine Engines With Inlet Throat Areas Between 0.40 and 1.35 m²:*

• One multi-engine power loss event involving a bird mass less than 1.15 kg (2.5 lbs) with catastrophic aircraft consequences has occurred for transport category airplanes, and four for business jet applications.

• Multi-engine ingestions of flocking birds larger than 1.15 kg (2.5 lbs) have occurred at a rate of 1.8E–8 per aircraft flight hour for large transport category aircraft. Data for business jets were incomplete and therefore no rate was calculated.

• No multi-engine ingestion events for bird classifications larger than 3.65 kg (8 lbs) have occurred.

6. *Observations for Turbine Engines With Inlet Throat Areas Less Than 0.40 m²:*

• No multi-engine power loss events with catastrophic aircraft consequences with birds larger than 1.15 kg (2.5 lbs) have occurred in service. No multi-engine power loss events involving a bird mass less than 1.15 kg with catastrophic aircraft consequences have occurred involving transport category aircraft. Of the data provided on business jets, three multi-engine power loss events involving a bird mass less than 1.15 kg with catastrophic aircraft consequences have occurred.

• Transport category aircraft multi-engine ingestions of flocking birds (of all mass sizes) have been reported to occur at a rate of 3.2E–8 per engine hour.

• No multi-engine ingestion events for bird classifications larger than 1.15 kg (2.5 lbs mass) have been reported.

The study concluded that currently certified engine designs might suffer a hazardous condition from large flocking bird ingestion at a rate slightly higher than desired. This conclusion led the ARAC to recommend new certification test requirements to achieve the safety objective discussed below, on a fleet wide basis.

Proposed Rule Safety Objective

Flocking birds may be ingested by more than one engine on the aircraft during one encounter. The objective of this proposed rule is to define certification criteria such that the predicted rate of catastrophic aircraft events due to multi-engine power loss resulting from multi-engine ingestion of flocking birds weighing between 1.15 kg (2.5 lbs) and 3.65 kg (8 lbs) does not exceed 1E–9 events per aircraft flight hour. A catastrophic aircraft event might occur when damage to the engines results in an unsafe condition as specified in § 33.75; or where insufficient total aircraft power, thrust or engine operability is retained to provide adequate engine run-on capability for continued safe flight and landing of the aircraft. The study

concluded that it is not possible to demonstrate by a single test that any given engine design will experience no more than one multi-engine failure with catastrophic consequences to the aircraft due to ingestion of large flocking birds in 1E9 hours of fleet experience. However, the study did conclude that a design requirement that will provide the basis for predicting that level of reliability on a fleet wide basis is possible, based on the following assumptions:

- Current bird control standards for airport certification will be maintained.
- Airport operators, air traffic controllers, and pilots will maintain their current awareness of, and mitigation proficiencies for, the bird ingestion threat.
- Any increase in the large flocking bird multi-engine ingestion rate over the next ten years will not exceed values estimated from the current bird growth rate observed in the data study.

The safety objective for this proposed rule is applied at the world fleet level. The world fleet of turbine powered airplanes is comprised of two, three, and four engine airplanes. The large engine historical fleet experience of multi-engine ingestions is dominated by three and four engine airplane data, however two engine airplanes are likely to dominate the future fleet. The working group considered this evolving situation within this rulemaking effort, with assumptions about future fleet makeup playing a role in the selection of possible new requirements.

With respect to bird ingestion, differences between these aircraft types generally relate to either the multi-engine bird ingestion rate, or the probability of a hazardous consequence given an actual dual-engine power loss. For example, twin-engine airplanes will have a higher probability of a hazardous consequence given an actual dual-engine power loss; however their multi-engine bird ingestion rate (and resulting power loss) is much lower than that of the three- and four-engine airplanes. Conversely, three- and four-engine airplanes, while having substantially higher rates of multi-engine bird ingestion (and resulting power loss), are less likely to suffer a hazardous consequence should a dual-engine power loss actually occur.

The EHWG review of world fleet service data collected as part of the industry study indicates that the higher rate of multi-engine bird ingestion occurrences for three- and four-engine airplanes dominates the rate for the entire fleet of large engines. This proposed rulemaking is therefore, based on the current world fleet distribution of two, three, and four engine airplanes in determining the potential new requirements necessary to meet the safety objective.

Since the world fleet of large engines is becoming increasingly populated with two engine airplanes, the proposed performance requirements will become more conservative and provide an even higher level of safety with respect to the multi-engine bird ingestion threat to airplanes in service for these size engines. For small and medium size engines, the world fleet is overwhelmingly made up of twin-engine airplanes. This situation is not likely to change over time. Therefore the multi-engine ingestion rate data for large size engines reflects the current fleet makeup.

Proposed Rule Parameter Selection

The EHWG concluded that to establish the test conditions that satisfy the safety objective, a probability analysis was needed. The probability of a dual-engine power loss given a dual-engine ingestion involves considerations of dependent and independent conditions. During a flock encounter, both engines are traveling at the same forward speed (that of the aircraft) and will be at the same power setting, creating a dependent condition. The independent conditions involve the details of the actual impact of the bird with the engine. Because of the combination of dependent and independent conditions involved in the analysis, simple numeric relationships for determining dual-engine power loss probabilities would not be appropriate. Therefore the working group selected a Monte Carlo simulation as the best tool to use for this analysis. The selection of controlling parameters for the analysis and a description of the analysis techniques are discussed below.

The EHWG recommendation identified the need to design a test that is representative of in-service combinations of critical ingestion parameters. Therefore, engine ingestion parameters for actual events resulting in sustained power loss were evaluated by the EHWG. The working group found that the most critical parameters that affect power loss are bird mass, bird speed, impact location, and engine power setting. They concluded that since testing for all possible combinations of parameters is impractical, defining a single certification test that will support meeting the safety objective was necessary. The working group defined this test requirement by using a Monte Carlo statistical analysis to show that the engine test covers a sufficient percentage of possible critical parameter combinations so as to support meeting the safety objective for birds in the 1.15 kg (2.5 lbs) to 3.65 kg (8 lbs) mass range.

The EHWG used the study to determine the probability of a catastrophic consequence to an aircraft given a dual-engine power loss event, and to aid in defining a test that would likely achieve the aircraft level fleet safety objective. They took the single engine ingestion rate and multi-engine ingestion rates for birds with mass larger than 1.15 kg (2.5 lbs) from the data, along with the fleet average flight length of 3.2 hours for large engine installations, and 1.7 hours for small and medium engine installations. The EHWG then used historical accident and incident service data to determine an aircraft hazard ratio. A hazard ratio is the number of aircraft accidents (related to multi-engine power loss) divided by the number of dual-engine power loss events. A dual-engine power loss is an event where at least two engines on an aircraft have a combined thrust loss greater than the maximum thrust of one engine. The multi-engine ingestion rate, average flight length and hazard ratio were analyzed to establish a combination of test parameters and conditions that would be consistent with the safety objective.

Hazard Ratio

To establish a hazard ratio, the FAA provided the EHWG with a list describing known multi-engine power loss events for review. The FAA data shows a hazard ratio for twin-engine aircraft to be 0.33, and all aircraft events to be 0.07. The Aerospace Industries Association (AIA) Propulsion Committee Report PC342 (submitted in support of Continued Airworthiness Assessment Methodology (CAAM) activity) shows a hazard ratio of 0.07 for all aircraft. The Boeing supplied data for large high bypass ratio engines shows a hazard ratio of 0.05 for all aircraft. Based on the above data, the EHWG selected a hazard ratio of 0.18 for all engines. The working group found that this hazard ratio was appropriate for the specific data set being utilized. The working group achieved similar results when statistical confidence bands of 75 and 90 percent for each data category were tabulated for comparison. This provided confidence that the value selected is appropriate for the fleet mix under consideration. For consistency with this single hazard ratio approach, the group applied a standard mix of 75-percent two engine and 25-percent four engine applications (based on aircraft flights) to all engine size classes.

Monte Carlo Analysis

A mathematical calculation working backward from the safety objective established a fleetwide multi-engine power loss rate that would satisfy the overall safety objective of the proposed rule. Then a number of Monte Carlo simulations were performed to identify a set of bird ingestion test conditions that would, if demonstrated during type certification, produce a fleetwide dual-engine power loss rate that supports the desired safety objective of the proposal.

The Monte Carlo simulations involved entering bird strike impact energy into the first stage rotor in accordance with variations of the ingestion parameters determined by service data probability curves. These parameters are noted below. Initial simulations defined a parameter boundary created by the current and proposed certification requirements (independent of fan blade or overall engine design) that would meet the safety objective.

The Monte Carlo simulation used random inputs of the following parameters:

- Takeoff or approach phase ingestion probabilities established from the data study (The data study showed an even 50-percent split between takeoff and approach encounters).
- Engine takeoff power first stage rotor speed based on actual service data.
- Impact location on the engine fan face based on area.
- Aircraft forward speed based on actual service data.
- The bird size based on a probability distribution established from the data study for birds larger than 1.15 kg (2.5 lbs) but less than or equal to 3.65 kg (8 lbs).

The Monte Carlo simulations also accounted for installation effects at the fan blade tip (tip shielding). An installed engine is generally shielded by the nacelle structure, particularly the inlet cowl, which reduces the exposure of the fan blade tip from direct impact by large birds. The reduction in the exposed diameter is close to 10 percent, but varies slightly with the engine diameter.

The engine structure considered in the analysis consists of any inlet structure that can be impacted by an ingested bird, including but not limited to inlet guide vanes, spinners, and fairings. Static engine inlet structure that would be certified as part of the engine, and which could be impacted by a bird prior to the bird striking the first rotating stage of an engine compressor was also evaluated in the analysis. Of particular interest was the fan fairing (for example, spinner or bullet nose), that directs inlet air around the fan hub into the core or fan bypass airflows. With current technology, this fairing is approximately one third of the diameter of the fan, which is approximately 11-percent of the fan area. The data shows that this fairing is impacted in service by birds in proportion to its area. The data also shows that fairings certified with engines to the requirements of § 33.77 (Amendment 33–6) have not caused an engine power loss from impacts due to birds of any size, including large flocking birds. The current requirement of § 33.76 requires that the fairing demonstrate capability for 1.15 kg (2.5 lbs) birds at the critical location at 250 knots impact speed. The requirements for the fairing, with conservative allowance for the size of the critical area of the fairing, were entered into the Monte Carlo analysis. The Monte Carlo analysis included impacts to the fairing as well as the fan blades for the overall evaluation. The results of the Monte Carlo analysis showed the safety target could be met for inlet components meeting the current requirements of § 33.76. As a result, the current requirements of § 33.76 appear to provide acceptable standards, and no additional rulemaking is contemplated for these classes of components. However, the working group decided to revise the Advisory Circular to clarify what the current requirements and acceptable methods of compliance are for inlet components.

Test Conditions and Results

The following test conditions are proposed based on the above analysis:

1. *Power, Thrust & Rotor Speeds:* The first stage of rotating blades of the engine is the feature of a typical turbine engine most susceptible to damage from large flocking birds which can result in loss of engine power. The working group determined that selecting a first stage rotor speed that most engines were likely to be at during takeoff would support meeting the safety objective. Analysis of manufacturer collected service data, which includes de-rated thrust operations for the world fleet, showed that this first stage rotor speed, on a fleet average basis, corresponds to 90 percent of maximum rated takeoff power or thrust on an International Standard Atmosphere (ISA) standard day. Therefore, the thrust or power setting for the proposed test demonstration is based on first stage rotor speed itself, which will be equal to a rotor speed that corresponds to engine operation at 90 percent of maximum rated takeoff power or thrust on an ISA standard day.

2. *Bird Speed:* The speed of the bird during the proposed test represents the speed of the aircraft at the time of ingestion. Ingestions that occur at speeds lower than flight speeds generally result in rejected takeoffs, and are usually less hazardous to the aircraft. Flight speeds at altitudes where large flocking birds are most likely encountered generally range between 150 and 250 knots. Damage to an engine due to a bird ingestion is a result of a combination of parameters that include ingestion speed, first stage rotor speed, and location of impact on the rotor blade span. For most turbine engine designs, analysis showed that a bird speed less than 250 knots is generally more conservative. The data shows that the most representative aircraft speed for encounters with large flocking birds is approximately 200 knots. The working group therefore, used 200 knots as the impact speed for the test demonstration.

3. *Target Location:* The Monte Carlo simulations showed that a test with bird impact at 50 percent of fan blade height or greater, in conjunction with the other test parameters described above, supports meeting the required safety objective of the rule. This aspect of the overall analysis assumes that the first stage blades will be more impact tolerant inboard of the 50-percent height location than outboard, and that the core ingestion capability is adequately addressed under the medium bird requirements. The test demonstration will establish the capability level of the first stage rotor at a location representing a minimum of half of the exposed area of the engine.

4. *Run-on:* The proposed run-on demonstration shows that the engine is capable of providing the required power, thrust and operability after the ingestion event. The engine must be able to continue a take-off and initial climb, and perform one air turn-back, with a safe return for landing. The current procedures recommended by the aircraft manufacturers and regulators following an engine malfunction, are for flight crews to concentrate on flying the aircraft without throttle manipulation, regardless of the nature of an engine malfunction, until an altitude of at least 400 ft. is reached. Also, the aircraft would have to be flown so that flight crews could maintain the aircraft on glide slope. Therefore, the run-on time for the large flocking bird ingestion test has been tentatively set at a minimum of 20 minutes (the same as for the medium bird requirements of § 33.76). The working group also specified that during the test the following parameters be met: for the first minute after

ingestion with no throttle manipulation, the engine must produce at least 50-percent maximum rated takeoff thrust; then the engine is to maintain no less than 50-percent maximum rated takeoff thrust for the next 13 minutes, but the throttle may be manipulated to provide opportunity for the aircraft to establish itself in a return approach attitude; then a five minute period at approach thrust with a one minute thrust bump to demonstrate that a flight crew could establish approach thrust/power and manipulate the throttle sufficiently to maintain glide slope during approach and landing. The working group also specified a final minute where the engine has to demonstrate that it can be brought safely to ground idle and shutdown. Also, given the potential for significant engine damage and resulting operating characteristics effects due to ingestion of birds of this mass, the group did not consider it reasonable to require engine re-acceleration after landing for thrust reverser use.

5. *Bird Mass and Weight:* For engines with inlet throat area larger than 3.9 m^2 (6045 sq in), a bird size of 2.5 kg (5.5 lbs) is representative of the average Snow Goose, one of the species identified as a key large flocking bird threat to transport category aircraft. The Monte Carlo simulation analysis shows that specifying a 2.5 kg (5.5 lbs) bird for the certification requirement, tested at the conditions specified in the proposed rule, provides adequate mitigation of the risk for bird masses larger than 1.15 kg (2.5 lbs), and up to 3.65 kg (8 lbs), such that the proposed rule's safety objective is met. This determination covers both the current and projected multi-engine ingestion rates. Similarly, for engines with an inlet throat area between 3.5–3.9 m^2 (5425–6045 sq in), the group found that a large flocking bird demonstration with a 2.1 kg (4.63 lbs) bird would be required to meet the safety objective. For engines with an inlet throat area between 2.5–3.5 m^2 (3875–5425 sq in), the group found that a large flocking bird demonstration with a 1.85 kg (4.08 lbs) bird would likely be required to meet the safety objective and for engines with an inlet throat area of 2.5 m^2 (3875 sq in) or less, the data review and analysis showed the current requirements of § 33.76 (for these size engines) already supports meeting the safety objective proposed for this rulemaking. Therefore, the current requirements of § 33.76 for engines with inlet throat areas of 2.5 m^2 (3875 sq in) or less would remain unchanged.

TAEIG Recommendation

The working group concluded that the proposed rule supports achieving the target level of safety against the currently identified and 10-year projected large flocking bird threat. The EHWG has also submitted recommendations relating to the control of Snow and Canada geese populations and their movements near airports. The TAEIG delivered these recommendations to FAA through an ARAC letter dated January 3, 2002.

Authority for This Rulemaking

Title 49 of the United States Code specifies the FAA's authority to issue rules on aviation safety. Subtitle I, Section 106, describes the authority of the FAA Administrator. Subtitle VII, Aviation Programs, describes in more detail the scope of the Agency's authority.

We are issuing this rulemaking under the authority described in Subtitle VII, Part A, Subpart III, Section 44701, ''General requirements.'' Under that section, Congress charges the FAA with promoting safe flight of civil aircraft in air commerce by prescribing regulations for practices, methods, and procedures the Administrator finds necessary for safety in air commerce, including minimum safety standards for aircraft engines. This proposed rule is within the scope of that authority because it updates the existing regulations for bird ingestion.

Paperwork Reduction Act

The Paperwork Reduction Act of 1995 (44 U.S.C. 3507(d)) requires that the FAA consider the impact of paperwork and other information collection burdens imposed on the public. We have determined that there are no current new information collection requirements associated with this proposed rule.

International Compatibility

In keeping with U.S. obligations under the Convention on International Civil Aviation, FAA policy is to comply with International Civil Aviation Organization (ICAO) Standards and Recommended Practices to the maximum extent practicable. The FAA has determined that there are no ICAO Standards and Recommended Practices that correspond to these proposed regulations.

Economic Assessment, Regulatory Flexibility Determination, Trade Impact Assessment, and Unfunded Mandates Assessment

Changes to Federal regulations must undergo several economic analyses. First, Executive Order 12866 directs that each Federal agency shall propose or adopt a regulation only upon a reasoned determination that the benefits of the intended regulation justify its costs. Second, the Regulatory Flexibility Act of 1980 requires agencies to analyze the economic impact of regulatory changes on small entities. Third, the Trade Agreements Act (19 U.S.C. 2531–2533) prohibits agencies from setting standards that create unnecessary obstacles to the foreign commerce of the United States. In developing U.S. standards, this Trade Agreements Act requires agencies to consider international standards and, where appropriate, to be the basis of U.S. standards. Fourth, the Unfunded Mandates Reform Act of 1995 (Pub. L. 104–4) requires agencies to prepare a written assessment of the costs, benefits, and other effects of proposed or final rules that include a Federal mandate likely to result in the expenditure by State, local, or tribal governments, in the aggregate, or by the private sector, of $100 million or more annually (adjusted for inflation). This portion of the preamble summarizes the FAA's analysis of the economic impacts of this NPRM.

The Department of Transportation Order DOT 2100.5 prescribes policies and procedures for simplification, analysis, and review of regulations. If the expected cost impact is so minimal that a proposal does not warrant a full regulatory evaluation, this order permits a statement to that effect. The basis for the minimal impact must be included in the preamble, if a full regulatory evaluation of the cost and benefits is not prepared. Such a determination has been made for this rule. The reasoning for that determination follows:

This NPRM would revise FAR 33.76 to harmonize with the current EASA CS–E 800. A brief discussion of the concept of harmonization is presented below.

Presently, U.S. turbine engine manufacturers must satisfy the certification requirements of both the FAA and the European Aviation Safety Agency (EASA) to market turbine engines in both the United States and Europe. Meeting two different sets of certification requirements can increase the costs of developing turbine engines often with no associated safety benefits. In the interests of fostering international trade, lowering the cost of aircraft and/or engine development, and making the certification process more efficient, the FAA, EASA, and equipment manufacturers have been working to create, to the maximum extent possible, a uniform set of certification requirements accepted in both the United States and Europe. This

endeavor is referred to as ''harmonization.''

Prior to 1970, each country had its own aviation standards. Therefore, if you wished to certify an engine in another country it was necessary to go through that country's certification process in addition to your own country's certification process. This resulted in a great deal of time and expense if it was desired to certify an engine in several countries. It was also felt that it was not necessary because many of the standards were similar.

In 1970, the Cyprus Arrangements created the Joint Aviation Authorities (JAA) in Europe. The JAA's purpose was to develop aviation standards that would be adopted by the individual European National Aviation Authorities (NAA's). The standards that were developed were known as the Joint Aviation Regulations (JAR's). However, the JAA had no legal status and it was up to each NAA as to whether they would adopt the JAR's in whole or in part. Each NAA was also responsible for aviation regulation matters in its particular country.

The successor organization to the JAA is the European Aviation Safety Agency (EASA). This organization came into existence on July 15, 2002 by Regulation (EC) 1592/2002 of the European Parliament and Council. The EASA became operational for certification of aircraft, engines, parts and appliances on September 28, 2003 by Commission Regulation (EC) 1702/2003.

When the EASA became operational it adopted all appropriate regulations including those that were in the process of being revised. Because the harmonization process between the proposed part 33.76 and the proposed CS–E 800 was almost completed when the EASA became operational, the requirements of the proposed part 33.76 and CS–E 800 are identical. CS–E 800 is now an official rule of a foreign regulatory agency while the proposed part 33.76 is still in the Notice of Proposed Rulemaking (NPRM) stage. Because CS–E 800 is an official regulation of a foreign government agency, according to the Trade Agreements Act of 1979, it could be used as the basis for an American rule.

The effect of this proposed rulemaking would be to reduce duplication of certification effort, through harmonization, thereby narrowing the differences between the U.S. and European regulations, because this proposal would create, to the maximum extent possible, a single set of certification requirements accepted in the United States and Europe. It should be noted that the American aircraft engine manufacturers already sell their products in Europe. To do this, the American aircraft engine manufacturers already voluntarily meet the European standards. Therefore, this proposed rule would have no impact on the costs of the American aircraft engine manufacturers.

The expected outcome of this NPRM is to have a minimal cost impact with positive net benefits for the reasons described above. Therefore, a detailed regulatory evaluation was not prepared. The FAA requests comments with supporting justification regarding the FAA determination of minimal impact.

The FAA has, therefore, determined that this rulemaking action is not a ''significant regulatory action'' as defined in section 3(f) of Executive Order 12866, and is not ''significant'' as defined in DOT's Regulatory Policies and Procedures. In addition, the FAA has determined that this rulemaking action: (1) Would not have a significant economic impact on a substantial number of small entities; (2) is in compliance with the Trade Agreements Act; and (3) would not impose an unfunded mandate on state, local, or tribal governments, or on the private sector.

Regulatory Flexibility Determination

The Regulatory Flexibility Act of 1980 (RFA) establishes ''as a principle of regulatory issuance that agencies shall endeavor, consistent with the objective of the rule and of applicable statutes, to fit regulatory and informational requirements to the scale of the business, organizations, and governmental jurisdictions subject to regulation.'' To achieve that principle, the RFA requires agencies to consider flexible regulatory proposals, to explain the rationale for their actions, and to solicit comments. The RFA covers a wide-range of small entities, including small businesses, not-for-profit organizations and small governmental jurisdictions.

Agencies must perform a review to determine whether a proposed or final rule would have a significant economic impact on a substantial number of small entities. If the agency determines that it would, the agency must prepare a regulatory flexibility analysis as described in the RFA.

However, if an agency determines that a proposed or final rule is not expected to have a significant economic impact on a substantial number of small entities, section 605(b) of the RFA provides that the head of the agency may so certify and a regulatory flexibility analysis is not required. The certification must include a statement providing the factual basis for this determination, and the reasoning should be clear.

This proposed rule would affect the following U.S. aircraft engine manufacturers:

1. GE Infrastructure Aircraft Engines; a Business Unit of the General Electric Co.

2. The Pratt & Whitney Company; a Division of United Technologies Corp.

The General Electric Company employs 300,000 people and United Technologies employs 209,000 people. The Small Business Administration (SBA) uses the North American Industry Classification System (NAICS) as updated by the Office of Management and the Budget (OMB) in 2002 or NAICS 2002 to classify industries and develop size standards. The classification for General Electric and United Technologies is NAICS 2002 Sectors 31–33 Manufacturing; Subsector 336 Transportation Equipment; and Aircraft Engine and Parts Manufacturers or Number 336412. The size standard for a small business aircraft engine manufacturer (NAICS 2002 336412) is 1,000 employees.

All United States engine manufacturers who would be affected by FAR part 33.76 exceed the SBA small-entity criteria of 1,000 employees.

Consequently, the FAA certifies that this rulemaking action would not have a significant economic impact on a substantial number of small entities. The FAA solicits comments regarding this determination.

Trade Impact Assessment

The Trade Agreements Act of 1979 prohibits Federal agencies from establishing any standards or engaging in related activities that create unnecessary obstacles to the foreign commerce of the United States. Legitimate domestic objectives, such as safety, are not considered unnecessary obstacles. The statute also requires consideration of international standards and, where appropriate, that they be the basis for U.S. standards.

Thus this proposed rule is consistent with the Trade Agreements Act, as it would use European Aviation Safety Agency standards, as the basis for U.S. standards.

Unfunded Mandates Assessment

The Unfunded Mandates Reform Act of 1995 (the Act) is intended, among other things, to curb the practice of imposing unfunded Federal mandates on State, local, and tribal governments. Title II of the Act requires each Federal agency to prepare a written statement assessing the effects of any Federal

mandate in a proposed or final agency rule that may result in an expenditure of $100 million or more (adjusted annually for inflation) in any one year by State, local, and tribal governments, in the aggregate, or by the private sector; such a mandate is deemed to be a ''significant regulatory action.'' The FAA currently uses an inflation-adjusted value of $120.7 million in lieu of $100 million.

This proposed rule does not contain such a mandate. The requirements of Title II of the Act, therefore, do not apply.

Executive Order 13132, Federalism

The FAA has analyzed this proposed rule under the principles and criteria of Executive Order 13132, Federalism. We have determined that this proposed rule would not have a substantial direct effect on the States, on the relationship between the national Government and the States, or on the distribution of power and responsibilities among the various levels of government. Therefore, this proposed rule would not have federalism implications.

Environmental Analysis

FAA Order 1050.1E identifies FAA actions that are categorically excluded from preparation of an environmental assessment or environmental impact statement under the National Environmental Policy Act in the absence of extraordinary circumstances. The FAA has determined this proposed rule qualifies for the categorical exclusion identified in Chapter 3, paragraph 312d.

Regulations That Significantly Affect Energy Supply, Distribution, or Use

The FAA has analyzed this NPRM under Executive Order 13211, Actions Concerning Regulations that Significantly Affect Energy Supply, Distribution, or Use (May 18, 2001). We have determined that it is not a ''significant energy action'' under the executive order because it is not a ''significant regulatory action'' under Executive Order 12866, and it is not likely to have a significant adverse effect on the supply, distribution, or use of energy.

List of Subjects in 14 CFR Part 33

Air Transportation, Aircraft, Aviation Safety, Safety

The Proposed Amendment

In consideration of the foregoing, the Federal Aviation Administration proposes to amend Chapter I of Title 14, Code of Federal Regulations, as follows:

PART 33—AIRWORTHINESS STANDARDS: AIRCRAFT ENGINES

1. The authority citation for part 33 continues to read as follows:

Authority: 49 U.S.C. 106(g), 40113, 44701, 44702, 44704.

2. Amend § 33.76 by revising paragraphs (a) introductory text, (a)(1), (a)(3), (a)(5), the heading of paragraph (b) introductory text, and the heading of paragraph (c) introductory text, and adding paragraph (d) to read as follows:

§ 33.76 Bird ingestion.

(a) *General.* Compliance with paragraphs (b), (c), and (d) of this section shall be in accordance with the following:

(1) Except as specified in paragraph (d) of this section, all ingestion tests must be conducted with the engine stabilized at no less than 100-percent takeoff power or thrust, for test day ambient conditions prior to the ingestion. In addition, the demonstration of compliance must account for engine operation at sea level takeoff conditions on the hottest day that a minimum engine can achieve maximum rated takeoff thrust or power.

* * * * *

(3) The impact to the front of the engine from the large single bird, the single largest medium bird which can enter the inlet, and the large flocking bird must be evaluated. Applicants must show that the associated components when struck under the conditions prescribed in paragraphs (b), (c) or (d) of this section, as applicable, will not affect the engine to the extent that the engine cannot comply with the requirements of paragraphs (b)(3), (c)(6) and (d)(4) of this section.

* * * * *

(5) Objects that are accepted by the Administrator may be substituted for birds when conducting the bird ingestion tests required by paragraphs (b), (c) and (d) of this section.

* * * * *

(b) *Large single bird.* * * *

(c) *Small and medium flocking bird.* * * *

(d) *Large flocking bird.* An engine test will be performed as follows:

(1) Large flocking bird engine tests will be performed using the bird mass and weights in Table 4, and ingested at a bird speed of 200 knots.

(2) Prior to the ingestion, the engine must be stabilized at no less than the mechanical rotor speed of the first exposed stage or stages that, on a standard day, would produce 90 percent of the sea level static maximum rated takeoff power or thrust.

(3) The bird must be targeted on the first exposed rotating stage or stages at a blade airfoil height of not less than 50 percent measured at the leading edge.

(4) Ingestion of a large flocking bird under the conditions prescribed in this paragraph must not cause any of the following:

(i) A sustained reduction of power or thrust to less than 50 percent of maximum rated takeoff power or thrust during the run-on segment specified under paragraph (d)(5)(i) of this section.

(ii) Engine shutdown during the required run-on demonstration specified in paragraph (d)(5) of this section.

(iii) The conditions specified in paragraph (b)(3) of this section.

(5) The following test schedule must be used:

(i) Ingestion followed by 1 minute without power lever movement.

(ii) Followed by 13 minutes at not less than 50 percent of maximum rated takeoff power or thrust.

(iii) Followed by 2 minutes between 30 and 35 percent of maximum rated takeoff power or thrust.

(iv) Followed by 1 minute with power or thrust increased from that set in paragraph (d)(5)(iii) of this section, by between 5 and 10 percent of maximum rated takeoff power or thrust.

(v) Followed by 2 minutes with power or thrust reduced from that set in paragraph (d)(5)(iv) of this section, by between 5 and 10 percent of maximum rated takeoff power or thrust.

(vi) Followed by a minimum of 1 minute at ground idle then engine shutdown.

The durations specified are times at the defined conditions. Power lever movement between each condition will be 10 seconds or less, except that power lever movements allowed within paragraph (d)(5)(ii) are not limited, and for setting power under paragraph (d)(5)(iii) of this section will be 30 seconds or less.

(6) Compliance with the large flocking bird ingestion requirements of this paragraph may also be demonstrated by:

(i) Incorporating the requirements of paragraph (d)(4) and (d)(5) of this section, into the large single bird test demonstration specified in paragraph (b)(1) of this section; or,

(ii) Use of an engine subassembly test at the ingestion conditions specified in paragraph (b)(1) of this section if:

(A) All components critical to complying with the requirements of paragraph (d) of this section are included in the subassembly test; and

(B) The components of paragraph (d)(6)(ii)(A) of this section are installed in a representative engine for a run-on demonstration in accordance with

paragraphs (d)(4) and (d)(5) of this section; except that section (d)(5)(i) is deleted and section (d)(5)(ii) must be 14 minutes in duration after the engine is started and stabilized; and

(C) The dynamic effects that would have been experienced during a full engine ingestion test can be shown to be negligible with respect to meeting the requirements of paragraphs (d)(4) and (d)(5) of this section.

(7) Applicants must show that an unsafe condition will not result if any engine operating limit is exceeded during the run-on period.

TABLE 4 TO § 33.76.—LARGE FLOCKING BIRD MASS AND WEIGHT

Engine inlet throat area m^2 (sq in)	Bird quantity	Bird mass and weight kg (lbs)
A <2.50 (3875 sq in)	None	
2.50 (3875 sq in) ≤A <3.50 (5425 sq in)	1	1.85 kg (4.08 lbs).
3.50 (5425 sq in) ≤A <3.90 (6045 sq in)	1	2.10 kg (4.63 lbs).
3.90 (6045 sq in) ≤A	1	2.50 kg (5.51 lbs).

Issued in Washington, DC, on July 13, 2006.

John J. Hickey,

Director, Aircraft Certification Service.

[FR Doc. E6–11373 Filed 7–19–06; 8:45 am]

BILLING CODE 4910–13–P

ENVIRONMENTAL PROTECTION AGENCY

40 CFR Part 82

[EPA–HQ–OAR–2003–0130; FRL–8200–1]

RIN 2060–AL90

Protection of Stratospheric Ozone: Minor Amendments to the Regulations Implementing the Allowance System for Controlling HCFC Production, Import and Export

AGENCY: Environmental Protection Agency (EPA).

ACTION: Proposed rule.

SUMMARY: EPA is proposing to amend the current regulations governing the production and trade of certain ozone-depleting substances to address issues concerning the export of previously imported material, heels, the exemption allowance petition process for HCFC–141b for military and space vehicle applications, and the definition for ''importer.'' We are proposing these minor adjustments to our regulations in response to requests from the regulated community, to ensure equitable treatment of stakeholders, and to reduce burden where the integrity of the requirements can still be sufficiently maintained. These proposed amendments appear in the ''Rules and Regulations'' section of this **Federal Register** as a direct final rule.

DATES: Comments must be submitted by August 21, 2006, or by September 5, 2006 if a hearing is requested by July 31, 2006. If requested, a hearing will be held on August 4, 2006 and the comment period will be extended until September 5, 2006.

ADDRESSES: Submit your comments, identified by Docket ID No. EPA–HQ–OAR–2003–0130, by one of the following methods:

- *http://www.regulations.gov:* Follow the on-line instructions for submitting comments.
- E-mail: *a-and-r-Docket@epa.gov.*
- Fax: 202–566–1741.
- Mail: Docket #, Air and Radiation Docket and Information Center, U.S. Environmental Protection Agency, Mail Code: 6102T, 1200 Pennsylvania Ave., NW., Washington, DC 20460.
- Hand Delivery: Docket #EPA–HQ–OAR–2003–0130, Air and Radiation Docket at EPA West, 1301 Constitution Avenue NW., Room B108, Mail Code 6102T, Washington, DC 20460. Such deliveries are only accepted during the Docket's normal hours of operation, and special arrangements should be made for deliveries of boxed information.

Instructions: Direct your comments to Docket ID No. EPA–HQ–OAR–2003–0130. EPA's policy is that all comments received will be included in the public docket without change and may be made available online at *www.regulations.gov,* including any personal information provided, unless the comment includes information claimed to be Confidential Business Information (CBI) or other information whose disclosure is restricted by statute. Do not submit information that you consider to be CBI or otherwise protected through www.regulations.gov or e-mail. The *www.regulations.gov* Web site is an ''anonymous access'' system, which means EPA will not know your identity or contact information unless you provide it in the body of your comment. If you send an e-mail comment directly to EPA without going through www.regulations.gov your e-mail address will be automatically captured and included as part of the comment that is placed in the public docket and made available on the Internet. If you submit an electronic comment, EPA recommends that you include your name and other contact information in the body of your comment and with any disk or CD-ROM you submit. If EPA cannot read your comment due to technical difficulties and cannot contact you for clarification, EPA may not be able to consider your comment. Electronic files should avoid the use of special characters, any form of encryption, and be free of any defects or viruses. For additional information about EPA's public docket visit the EPA Docket Center homepage at *http://www.epa.gov/epahome/dockets.htm.*

FOR FURTHER INFORMATION CONTACT: Cindy Axinn Newberg, EPA, Stratospheric Protection Division, Office of Atmospheric Programs, Office of Air and Radiation (6205J), 1200 Pennsylvania Avenue, NW., Washington, DC 20460, (202) 343–9729, *newberg.cindy@epa.gov.*

SUPPLEMENTARY INFORMATION: (1) Under the *Montreal Protocol on Substances that Deplete the Ozone Layer* (Protocol), as amended, the U.S. and other industrialized countries that are Parties to the Protocol have agreed to limit production and consumption of hydrochlorofluorocarbons (HCFCs) and to phase out consumption in a step-wise fashion over time, culminating in a complete phaseout in 2030. Title VI of the Clean Air Act Amendments of 1990 (CAAA) authorizes EPA to promulgate regulations to manage the consumption and production of HCFCs until the total phaseout in 2030. EPA promulgated final regulations establishing an allowance tracking system for HCFCs on January 21, 2003 (68 FR 2820). These regulations were amended on June 17, 2004 (69 FR 34024) to ensure U.S. compliance with the Montreal Protocol. Today's proposed action would amend aspects of the regulations that relate to exports of previously imported material, the import of HCFC heels, the HCFC–

141b exemption allowance petition process, and the definition of ''importer.'' We are proposing these minor adjustments to our regulations in response to requests from the regulated community, to ensure equitable treatment of stakeholders, and to reduce burden where the integrity of the requirements can still be sufficiently maintained.

In the ''Rules and Regulations'' section of this **Federal Register**, we are issuing these amendments as a direct final rule without prior proposal because we view this as a non-controversial action and anticipate no adverse comment. We have explained our reasons for this action in the preamble to the direct final rule. If we receive no adverse comment, we will not take further action on this proposed rule. If we receive adverse comment, we will withdraw the direct final rule, or particular provisions of the rule, and the rule or the particular provisions will not take effect. We would address all public comments in any subsequent final rule based on this proposed rule. We will not institute a second comment period on this action. Any parties interested in commenting must do so at this time.

For further information, please see the information provided in the direct final action that is located in the ''Rules and Regulations'' section of this **Federal Register**.

(2) Tips for Preparing Your Comments. When submitting comments, remember to:

- Identify the rulemaking by docket number and other identifying information (subject heading, **Federal Register** date and page number).
- Follow directions—The agency may ask you to respond to specific questions or organize comments by referencing a Code of Federal Regulations (CFR) part or section number.
- Explain why you agree or disagree; suggest alternatives and substitute language for your requested changes.
- Describe any assumptions and provide any technical information and/or data that you used.
- If you estimate potential costs or burdens, explain how you arrived at your estimate in sufficient detail to allow for it to be reproduced.
- Provide specific examples to illustrate your concerns, and suggest alternatives.
- Explain your views as clearly as possible, avoiding the use of profanity or personal threats.
- Make sure to submit your comments by the comment period deadline identified.

Table of Contents

I. Regulated Entities
II. Statutory and Executive Order Reviews
A. Executive Order 12866: Regulatory Planning and Review
B. Paperwork Reduction Act
C. Regulatory Flexibility Act Regulatory Flexibility Act (RFA), as Amended by the Small Business Regulatory Enforcement Fairness Act of 1996 (SBREFA), 5 U.S.C. 601 *et seq.*
D. Unfunded Mandates Reform Act
E. Executive Order 13132: Federalism
F. Executive Order 13175: Consultation and Coordination With Indian Tribal Governments
G. Executive Order 13045: Protection of Children From Environmental Health & Safety Risks
H. Executive Order 13211: Actions That Significantly Affect Energy Supply, Distribution, or Use
I. National Technology Transfer and Advancement Act

I. Regulated Entities

These minor amendments to the HCFC allowance allocation system would affect the following categories:

Category	NAICS code	SIC code	Examples of regulated entities
Chlorofluorocarbon gas manufacturing	325120	2869	Chlorodifluoromethane manufacturers; Dichlorofluoroethane manufacturers Chlorodifluoroethane manufacturers.
Chlorofluorocarbon gas importers	325120	2869	Chlorodifluoromethane importers; Dichlorofluoroethane importers; Chlorodifluoroethane importers.
Chlorofluorocarbon gas exporters	325120	2869	Chlorodifluoromethane exporters; Dichlorofluoroethane exporters; Chlorodifluoroethane exporters.
Polystyrene Foam Product Manufacturing	326140	3086	Plastics foam Products (Polystyrene Foam Products).
Urethane and Other Foam Product (Except Polystyrene) Manufacturing.	326150	3086	Insulation and cushioning, foam plastics (except polystyrene) manufacturing.

This table is not intended to be exhaustive, but rather provides a guide for readers regarding entities likely to be regulated by this action. This table lists the types of entities that EPA is now aware could potentially be regulated by this action. Other types of entities not listed in this table could also be affected. To determine whether your facility, company, business organization, or other entity is regulated by this action, you should carefully examine these regulations. If you have questions regarding the applicability of this action to a particular entity, consult the person listed in the **FOR FURTHER INFORMATION CONTACT** section.

II. Statutory and Executive Order Reviews

A. Executive Order 12866: Regulatory Planning and Review

Under Executive Order 12866 (58 FR 51735, October 4, 1993), the Agency must determine whether this regulatory action is ''significant'' and therefore subject to OMB review and the requirements of the Executive Order. The Order defines a ''significant'' regulatory action as one that is likely to result in a rule that may:

(1) Have an annual effect on the economy of $100 million or more, or adversely affect in a material way the economy, a sector of the economy, productivity, competition, jobs, the environment, public health or safety, or State, local, or tribal government or communities;

(2) Create a serious inconsistency or otherwise interfere with an action taken or planned by another agency;

(3) Materially alter the budgetary impact of entitlements, grants, user fees, or loan programs or the rights and obligations of recipients thereof; or

(4) Raise novel legal or policy issues arising out of legal mandates, the President's priorities, or the principles set forth in the Executive Order.

It has been determined that this proposed rule is not a ''significant regulatory action'' within the meaning of the Executive Order and is therefore not subject to OMB review.

B. Paperwork Reduction Act

This action does not impose any new information collection burden. Instead, this NPRM proposes to decrease the frequency of one specific report and limit the range of types of containers subject to a specific regulatory requirement. The Office of Management and Budget (OMB) has previously approved the information collection requirements contained in the existing regulations at 40 CFR part 82 subpart A under the provisions of the Paperwork Reduction Act, 44 U.S.C. 3501 *et seq.* and has assigned OMB control number 2060–0498 (EPA ICR No. 2014.02). A copy of the OMB approved Information Collection Request (ICR) may be obtained from the Collection Strategies Division; U.S. Environmental Protection Agency (2822T); 1200 Pennsylvania Ave., NW., Washington, DC 20460 or by calling (202) 566–1672. Burden means the total time, effort, or financial resources expended by persons to generate, maintain, retain, or disclose or provide information to or for a Federal agency. This includes the time needed to review instructions; develop, acquire, install, and utilize technology and systems for the purposes of collecting, validating, and verifying information, processing and maintaining information, and disclosing and providing information; adjust the existing ways to comply with any previously applicable instructions and requirements; train personnel to be able to respond to a collection of information; search data sources; complete and review the collection of information; and transmit or otherwise disclose the information. An agency may not conduct or sponsor, and a person is not required to respond to a collection of information unless it displays a currently valid OMB control number. The OMB control numbers for EPA's regulations in 40 CFR are listed in 40 CFR part 9.

C. Regulatory Flexibility Act (RFA), as Amended by the Small Business Regulatory Enforcement Fairness Act of 1996 (SBREFA), 5 U.S.C. 601 et seq.

The Regulatory Flexibility Act (RFA) generally requires an agency to prepare a regulatory flexibility analysis of any rule subject to notice and comment rulemaking requirements under the Administrative Procedure Act or any other statute unless the agency certifies that the rule will not have a significant economic impact on a substantial number of small entities. Small entities include small businesses, small organizations, and small governmental jurisdictions.

For purposes of assessing the impacts of today's rule on small entities, small entity is defined as: (1) A small business as defined by the NAICS codes below (2) a small governmental jurisdiction that is a government of a city, county, town, school district or special district with a population of less than 50,000; and (3) a small organization that is any not-for-profit enterprise which is independently owned and operated and is not dominant in its field.

Category	NAICS code	SIC code	NAICS small business size standard (in number of employees or millions of dollars)
1. Chemical and Allied Products, NEC	424690	5169	100
2. Chlorofluorocarbon gas exporters	325120	2869	100

After considering the economic impacts of today's direct final rule on small entities, I certify that this action will not have a significant economic impact on a substantial number of small entities. This direct final rule will not impose any requirements on small entities. None of the entities affected by this rule are considered small as defined by the size standards listed above.

D. Unfunded Mandates Reform Act

Title II of the Unfunded Mandates Reform Act of 1995 (UMRA), Public Law 104–4, establishes requirements for Federal agencies to assess the effects of their regulatory actions on State, local and tribal government and the private sector. Under section 202 of the UMRA, EPA generally must prepare a written statement, including a cost-benefit analysis, for proposed and final rules with ''Federal mandates'' that may result in expenditures by State, local and tribal governments, in the aggregate, or by the private sector, of $100 million or more in any one year. If a written statement is required under section 202, section 205 of the UMRA generally requires EPA to identify and consider a reasonable number of regulatory alternatives and adopt the least costly, most cost-effective or least burdensome alternative that achieves the objectives of the rule, unless the Agency explains why this alternative is not selected or the selection of this alternative is inconsistent with law.

Section 203 of the UMRA requires the Agency to establish a plan for obtaining input from and informing, educating, and advising any small governments that may be significantly or uniquely affected by the rule. Section 204 of the UMRA requires the Agency to develop a process to allow elected state, local, and tribal government officials to provide input in the development of any proposal containing a significant Federal intergovernmental mandate.

EPA has determined that this proposed rule does not contain a Federal mandate that may result in expenditures of $100 million or more by State, local and tribal governments, in the aggregate, or by the private sector, in any one year. The provisions in this proposed rule fulfill the obligations of the United States under the international treaty, *The Montreal Protocol on Substances that Deplete the Ozone Layer,* as well as those requirements set forth by Congress in the Clean Air Act. Viewed as a whole, all of these proposed amendments do not create a Federal mandate resulting in costs of $100 million or more in any one year for State, local and tribal governments, in the aggregate, or for the private sector. Thus, this proposed rule is not subject to the requirements of sections 202 and 205 of the UMRA. EPA has also determined that this proposal contains no regulatory requirements that might significantly or uniquely affect small governments; therefore, EPA is not required to develop a plan with regard to small governments under section 203. Finally, because this proposal does not contain a significant intergovernmental mandate, the Agency is not required to develop a process to obtain input from elected state, local, and tribal officials under section 204.

E. Executive Order 13132: Federalism

Executive Order 13132, entitled ''Federalism'' (64 FR 43255, August 10, 1999), requires EPA to develop an accountable process to ensure ''meaningful and timely input by State and local officials in the development of regulatory policies that have federalism implications.'' ''Policies that have federalism implications'' is defined in the Executive Order to include regulations that have ''substantial direct effects on the States, on the relationship between the national government and the States, or on the distribution of power and responsibilities among the various levels of government.''

Under Section 6 of Executive Order 13132, EPA may not issue a regulation that has federalism implications, that imposes substantial direct compliance costs, and that is not required by statute, unless the Federal government provides the funds necessary to pay the direct compliance costs incurred by State and local governments, or EPA consults with State and local officials early in the process of developing the regulation. EPA also may not issue a regulation that has federalism implications and that preempts State law, unless the Agency consults with State and local officials early in the process of developing the regulation.

This proposed rule does not have federalism implications. It will not have substantial direct effects on the States, on the relationship between the national government and the States, or on the distribution of power and responsibilities among the various levels of government, as specified in Executive Order 13132. Today's proposal is expected to primarily affect producers, importers and exporters of HCFCs. Thus, the requirements of section 6 of the Executive Order do not apply. In the spirit of Executive Order 13132, and consistent with EPA policy to promote communications between EPA and State and local governments, EPA specifically solicits comment on this proposed rule from State and local officials.

F. Executive Order 13175: Consultation and Coordination With Indian Tribal Governments

Executive Order 13175, entitled ''Consultation and Coordination with Indian Tribal Governments'' (65 FR 67249, November 9, 2000), requires EPA to develop an accountable process to ensure ''meaningful and timely input by tribal officials in the development of regulatory policies that have tribal implications.'' This proposed rule does not have tribal implications, as specified in Executive Order 13175. This proposal does not significantly or uniquely affect the communities of Indian tribal governments. It does not impose any enforceable duties on communities of Indian tribal governments. Thus, Executive Order 13175 does not apply to this rule.

G. Executive Order 13045: Protection of Children From Environmental Health and Safety Risks

Executive Order 13045: ''Protection of Children from Environmental Health Risks and Safety Risks'' (62 FR 19885, April 23, 1997) applies to any rule that: (1) Is determined to be ''economically significant'' as defined under Executive Order 12866, and (2) concerns an environmental health or safety risk that EPA has reason to believe may have a disproportionate effect on children. If the regulatory action meets both criteria, the Agency must evaluate the environmental health or safety effects of the planned rule on children, and explain why the planned regulation is preferable to other potentially effective and reasonably feasible alternatives considered by the Agency. While this proposal is not subject to the Executive Order because it is not economically significant as defined in E.O. 12866, we nonetheless have reason to believe that the environmental health or safety risk addressed by this action may have a disproportionate effect on children. Depletion of stratospheric ozone results in greater transmission of the sun's ultraviolet (UV) radiation to the earth's surface. The following studies describe the effects on children of excessive exposure to UV radiation: (1) Westerdahl J, Olsson H, Ingvar C. ''At what age do sunburn episodes play a crucial role for the development of malignant melanoma,'' Eur J Cancer 1994: 30A: 1647–54; (2) Elwood JM Japson J. ''Melanoma and sun exposure: an overview of published studies,'' Int J Cancer 1997; 73:198–203; (3) Armstrong BK, ''Melanoma: childhood or lifelong sun exposure,'' In: Grobb JJ, Stern RS Mackie RM, Weinstock WA, eds. ''Epidemiology, causes and prevention of skin diseases,'' 1st ed. London, England: Blackwell Science, 1997: 63–6; (4) Whieman D., Green A. ''Melanoma and Sunburn,'' Cancer Causes Control, 1994: 5:564–72; (5) Heenan, PJ. ''Does intermittent sun exposure cause basal cell carcinoma? A case control study in Western Australia,'' Int J Cancer 1995; 60: 489–94; (6) Gallagher, RP, Hill, GB, Bajdik, CD, *et al.* ''Sunlight exposure, pigmentary factors, and risk of nonmelanocytic skin cancer I, Basal cell carcinoma.'' Arch Dermatol 1995; 131: 157–63; (7) Armstrong, DK. ''How sun exposure causes skin cancer: an epidemiological perspective,'' Prevention of Skin Cancer. 2004. 89–116. The public is invited to submit or identify peer-reviewed studies and data, of which EPA may not be aware, that assessed results of early life exposure to UV radiation.

This proposal concerns minor changes to the existing regulatory regime for the class II controlled substances. Theses minor changes are not expected to increase the impacts on children's health from stratospheric ozone depletion.

H. Executive Order 13211: Actions That Significantly Affect Energy Supply, Distribution, or Use

This proposed rule is not a ''significant energy action'' as defined in Executive Order 13211, ''Actions Concerning Regulations That Significantly Affect Energy Supply, Distribution, or Use'' (66 FR 28355 (May 22, 2001)) because it is not a significant regulatory action under Executive Order 12866.

I. The National Technology Transfer and Advancement Act

Section 12(d) of the National Technology Transfer and Advancement Act of 1995 (''NTTAA''), Public Law 104–113, Section 12(d) (15 U.S.C. 272 note) directs EPA to use voluntary consensus standards in its regulatory activities unless to do so would be inconsistent with applicable law or otherwise impractical. Voluntary consensus standards are technical standards (e.g., materials specifications, test methods, sampling procedures, and business practices) that are developed or adopted by voluntary consensus standards bodies. The NTTAA directs EPA to provide Congress, through OMB, explanations when the Agency decides not to use available and applicable voluntary consensus standards. This proposed rulemaking does not involve technical standards. Therefore, EPA is not considering the use of any voluntary consensus standards.

List of Subjects in 40 CFR Part 82

Environmental protection, Administrative practice and procedure, Air pollution control, Chemicals, Chlorofluorocarbons, Exports, Hydrochlorofluorocarbons, Imports, Reporting and recordkeeping requirements.

Dated: July 13, 2006.

Stephen L. Johnson,

Administrator.

[FR Doc. E6–11531 Filed 7–19–06; 8:45 am]

BILLING CODE 6560–50–P

Notices

Federal Register

Vol. 71, No. 139

Thursday, July 20, 2006

This section of the FEDERAL REGISTER contains documents other than rules or proposed rules that are applicable to the public. Notices of hearings and investigations, committee meetings, agency decisions and rulings, delegations of authority, filing of petitions and applications and agency statements of organization and functions are examples of documents appearing in this section.

DEPARTMENT OF AGRICULTURE

Cooperative State Research, Education, and Extension Service

Notice of Intent To Establish a New Information Collection

AGENCY: Cooperative State Research, Education, and Extension Service, USDA.

ACTION: Notice and request for comments.

SUMMARY: In accordance with the Paperwork Reduction Act of 1995 (44 U.S.C. chap. 35) and the Office of Management and Budget (OMB) regulations at 5 CFR part 1320 (60 FR 44978, August 29, 1995), this notice announces the Cooperative State Research, Education, and Extension Service's (CSREES) intention to request approval to establish a new information collection in support of the 4–H Youth Enrollment Report.

DATES: Written comments on this notice must be received by September 18, 2006 to be assured of consideration. Comments received after that date will be considered to the extent practicable.

ADDRESSES: You may submit comments and requests for copies of this information collection by any of the following methods: E-mail: *jhitchcock@csrees.usda.gov;* Fax: 202–720–0857; Mail: USDA/CSREES, STOP 2216, 1400 Independence Avenue, SW., Washington, DC 20250–2216; Hand Delivery/Courier: 800 9th Street, SW., Room 4217, Washington, DC 20024.

FOR FURTHER INFORMATION CONTACT: Jason Hitchcock, E-Government Program Leader, Information Systems and Technology Management, 202–720–4343.

SUPPLEMENTARY INFORMATION:

Title: 4–H Youth Enrollment Report.

OMB Number: 0524–New.

Type of Request: Intent to request and establish an information collection.

Abstract: The mission of National 4–H Headquarters; Cooperative State Research, Education, and Extension Service; United States Department of Agriculture (USDA); is to advance knowledge for agriculture, the environment, human health and well-being, and communities by creating opportunities for youth. 4–H is a complex national organization, led by National 4ndash;H Headquarters, CSREES, USDA, with hundreds of educational curricula, activities, and events for youth ages 5 to 17. Programs originate at 105 land-grant universities (LGUs), and local programs are conducted and managed by some 4,000 professional Extension staff in 3,050 counties, with nearly 7 million youth enrolled each year. Nearly 600,000 volunteer leaders work directly with the 4–H youth.

The 1914 Smith-Lever Act created the Cooperative Extension System (CES) of the LGUs and their Federal partner, the Extension Service, now the Cooperative State Research, Education, and Extension Service (CSREES), USDA. 4–H was already well-established, and became the first operating part of the new extension work. The Smith-Lever Act stipulated that ''It shall be the duty of said colleges, annually, on or about the first day of January, to make to the Governor of the State in which it is located a full and detailed report of its operations in extension work as defined in this Act * * * a copy of which report shall be sent to the Secretary of Agriculture.'' As a result of this requirement, annually each county sends their state 4–H office an electronic aggregated summary of their 4–H enrollment.

Information collected in the 4–H Youth Enrollment Report includes youth enrollment totals by delivery mode, youth enrollment totals by type of 4–H activity, youth enrollment totals by school grade, youth enrollment totals by gender, youth enrollment totals by place of residence, adult volunteer totals, youth volunteer totals, and youth enrollment totals by race and ethnicity.

Need and Use of the Information: The Annual 4–H Enrollment Report is the principal means by which the 4–H movement can keep track of its progress, as well as emerging needs, potential problems and opportunities.

The information from this collection is used to report, as requested by the Congress or the Administration, on rural versus urban outreach, enrollment by race, youth participation in leadership, community service, etc. It also is used to determine market share or percentage of the youth of each state by age and place of residence who are enrolled in the 4–H youth development program. The annual 4–H Youth Enrollment Report also allows oversight of all reasonable efforts by staff and volunteers to reach underserved and minority groups. Information also is available at *http://www.national4-hheadquarters.gov/library/4h_stats.htm.*

Estimate of Burden: The hour burden estimates were calculated based on a survey of respondents conducted by CSREES for the purpose of obtaining clearance from the Office of Management and Budget in compliance with the Paperwork Reduction Act.

Estimated Number of Respondents: 56.

Estimated Number of Responses per Respondent: 1.

Estimated Time per Response: 1 hour.

Estimated Total Annual Burden on Respondents: 56 hours.

Comments: Comments are invited on: (a) Whether the proposed collection of information is necessary for the proper performance of the functions of the agency, including whether the information will have practical utility; (b) the accuracy of the agency's estimate of the burden of the proposed collection of information, including the validity of the methodology and assumptions used; (c) ways to enhance the quality, utility, and clarity of the information to be collected; and (d) ways to minimize the burden of the collection of information on those who are to respond, including through the use of appropriate automated, electronic, mechanical, or other technological collection techniques or other forms of information technology.

All responses to this notice will be summarized and included in the request to OMB for approval. All comments will become a matter of public record.

Done in Washington, DC, this 11th day of July, 2006.

Gale Buchanan,

Under Secretary, Research, Education, and Economics.

[FR Doc. E6–11535 Filed 7–19–06; 8:45 am]

BILLING CODE 3410–22–P

DEPARTMENT OF AGRICULTURE

Grain Inspection, Packers and Stockyards Administration

[06–TX–S]

Designation for the State of Texas Area

AGENCY: Grain Inspection, Packers and Stockyards Administration, USDA.

ACTION: Notice.

SUMMARY: The Grain Inspection, Packers and Stockyards Administration (GIPSA) announces that Intercontinental Grain Inspections, Inc.'s (Intercontinental), designation is amended to provide official inspection services under the United States Grain Standards Act in Montague, Cooke, Grayson, Fannin, Lamar, Red River, Young, Stephen, and Eastland Counties in Texas.

DATES: *Effective Date:* August 21, 2006.

ADDRESSES: USDA, GIPSA, Karen Guagliardo, Review Branch Chief, Compliance Division, STOP 3604, Room 1647–S, 1400 Independence Avenue, SW., Washington, DC 20250–3604.

FOR FURTHER INFORMATION CONTACT: Karen Guagliardo at 202–720–7312, e-mail *Karen.W.Guagliardo@usda.gov.*

SUPPLEMENTARY INFORMATION: This action has been reviewed and determined not to be a rule or regulation as defined in Executive Order 12866 and Departmental Regulation 1512–1; therefore, the Executive Order and Departmental Regulation do not apply to this action.

In the March 13, 2006, **Federal Register** (71 FR 12675), GIPSA asked persons interested in providing official services in Clay, Montague, Cooke, Grayson, Fannin, Lamar, Red River, Young, Stephen, and Eastland Counties in Texas to submit an application for designation by April 12, 2006.

There were two applicants for the Texas area: Enid Grain Inspection Company, Inc. (Enid) and Intercontinental Grain Inspections Inc. (Intercontinental); both currently designated official agencies. Enid applied for designation to provide official services in Clay, Montague, Cooke, and Grayson Counties. Intercontinental applied for all of the counties announced in the March 13, 2006, **Federal Register.** GIPSA asked for comments on Enid and Intercontinental in the May 12, 2006, **Federal Register** (71 FR 27672). The geographic area specified in the March 13, 2006 **Federal Register** notice erroneously included Clay County. This county is currently assigned to another official agency and therefore is not open for designation in this action.

Comments were due by June 12, 2006. GIPSA received one comment from an elevator manager in Lamar County, supporting Intercontinental for designation.

GIPSA evaluated all available information regarding the designation criteria in Section 7(f)(l)(A) of the Act and, according to Section 7(f)(l)(B), determined that Intercontinental is better able to provide official services in the geographic area specified in the March 13, 2006, **Federal Register,** for which it applied. Intercontinental was previously designated for 18 months only, effective April 10, 2006, and terminating September 30, 2007. Intercontinental's designation will be amended to include the additional Texas counties. Interested persons may obtain official services by calling Intercontinental headquarters in Saginaw, Texas at 817–306–8900.

Authority: 7 U.S.C. 71–87k.

David R. Shipman,

Acting Administrator, Grain Inspection, Packers and Stockyards Administration.

[FR Doc. E6–11485 Filed 7–19–06; 8:45 am]

BILLING CODE 3410–EN–P

DEPARTMENT OF COMMERCE

International Trade Administration

[A–331–802]

Certain Frozen Warmwater Shrimp from Ecuador; Partial Rescission of Antidumping Duty Administrative Review

AGENCY: Import Administration, International Trade Administration, Department of Commerce.

EFFECTIVE DATE: July 20, 2006.

FOR FURTHER INFORMATION CONTACT: David Goldberger or Gemal Brangman, AD/CVD Operations, Office 2, Import Administration, International Trade Administration, U.S. Department of Commerce, 14th Street and Constitution Avenue, NW., Washington, DC 20230; telephone: (202) 482–4136 or (202) 482–3773, respectively.

SUPPLEMENTARY INFORMATION:

Background

On February 1, 2006, the Department of Commerce (the Department) published in the **Federal Register** a notice of opportunity to request an administrative review of the antidumping duty order on certain frozen warmwater shrimp from Ecuador for the period August 4, 2004, through January 31, 2006. *See Antidumping or Countervailing Duty Order, Finding, or Suspended Investigation; Opportunity to Request Administrative Review*, 71 FR 5239 (February 1, 2006). On February 28, 2006, in accordance with 19 CFR 351.213(b)(2), certain respondents requested a review of the antidumping duty order on certain frozen warmwater shrimp from Ecuador. In addition, on February 28, 2006, the petitioner[1] also requested an administrative review for numerous Ecuadorian exporters of subject merchandise in accordance with 19 CFR 351.213(b)(1).

In April 2006, the Department initiated an administrative review for 71 companies and we requested that each provide data on the quantity and value of its exports of subject merchandise to the United States during the period of review (POR). These companies are listed in the Department's notice of initiation. *See Notice of Initiation of Administrative Reviews of the Antidumping Duty Orders on Certain Frozen Warmwater Shrimp from Brazil, Ecuador, India and Thailand*, 71 FR 17819 (April 7, 2006) (*Notice of Initiation*).

Between May 24, 2006, and July 6, 2006, the requests for administrative review were withdrawn for 46 companies, in accordance with 19 CFR 351.213(d)(1). These companies are: 1) Agricola e Industrial Ecuaplantation; 2) Alquimia Marina S.A.; 3) Babychic SA; 4) Brimon, S.A.; 5) Dunci S.A.; 6) Eculine; 7) Edpacif; 8) El Rosario (ERSA) S.A.; 9) Empacadora del Pacifico S.A. (Edpacif S.A.); 10) Empacadora Dufer Cia. Ltda.; 11) Empacadora Grupo Gran Mar Empagran S.A.; 12) Empacadora Nacional C.A.; 13) Empacadora Bilbo S.A. (Bilbosa); 14) Empagran; 15) Estar C.A.; 16) Exporklore, S.A.; 17) Exportadora Bananera Noboa; 18) Exports del Oceano ; 19) Gondi S.A.; 20) Industrial Pesquera Santa Priscila SA; 21) Industrial Pesquera Santa Priscilla; 22) Inepexa Inc.; 23) Karpicorp S.A.; 24) Marecuador Co Ltda.; 25) Marisco; 26) Mariscos de Chupadores Chupamar; 27) Mariscos del Ecuador c.l. Marecuador; 28) Mariscos del Ecuador Marecuador Co.; 29) Negocios Industriales Real NIRSA S.A.; 30) Novapesca SA; 31) Oceanmundo S.A.; 32) Oceanpro S.A.; 33) Operadora y Procesadora de Products Marinos OMARSA S.A.; 34) Oyerly SA; 35) P.C. Seafood SA; 36) Peslasa S.A.; 37) Phillips Seafood of Ecuador S.A.; 38) Procesadora del Rio Proriosa SA; 39) Procesadora Del Rio S.A. Proriosa; 40) Proriosa sa Procesadora del Rio SA; 41) Seafood

[1] The petitioner in this proceeding is the Ad Hoc Shrimp Trade Action Committee.

Padre Aguirre; 42) Sociedad Nacional de Galapagos C.A.; 43) Soitgar; 44) Tecnica & Comercio de la Pesca Teco; 45) Transmarina C. A.; and 46) Unilines Transport System. Section 351.213(d)(1) of the Department's regulations requires that the Secretary rescind an administrative review if a party requesting a review withdraws the request within 90 days of the date of publication of the notice of initiation. Therefore, because all requests for administrative reviews were timely withdrawn for the companies listed above, in accordance with 19 CFR 351.213(d)(1), we are rescinding this review with regard to these companies.

In addition, the petitioner requested a review of a single company twice under two different names: Jorge Luis and Jorge Luis Benitez Lopez. According to information on the record of this proceeding (*i.e.*, the company's submission on May 9, 2006), these two company names refer to the same company, and the correct legal name for this company is Jorge Luis Benitez Lopez. We clarify that we will include this company in our administrative review only once. Therefore, because the company identified above will be included in this administrative review, and because keeping the incorrect company name with the list of companies included in this administrative review creates administrative difficulties, we are rescinding the review of Jorge Luis.

Partial Rescission of Review

As noted above, the petitioner and certain respondents withdrew their requests for an administrative review for the following companies within the time limits set forth in 19 CFR 351.213(d)(1): Agricola e Industrial Ecuaplantation; Alquimia Marina S.A.; Babychic SA; Brimon, S.A.; Dunci S.A.; Eculine; Edpacif ; El Rosario (ERSA) S.A.; Empacadora del Pacifico S.A. (Edpacif S.A.); Empacadora Dufer Cia. Ltda.; Empacadora Grupo Gran Mar Empagran S.A.; Empacadora Nacional C.A.; Empacadora Bilbo S.A. (Bilbosa); Empagran; Estar C.A.; Exporklore, S.A.; Exportadora Bananera Noboa; Exports del Oceano; Gondi S.A.; Industrial Pesquera Santa Priscila SA; Industrial Pesquera Santa Priscilla; Inepexa Inc.; Karpicorp S.A.; Marecuador Co Ltda.; Marisco; Mariscos de Chupadores Chupamar; Mariscos del Ecuador c.l. Marecuador; Mariscos del Ecuador Marecuador Co.; Negocios Industriales Real NIRSA S.A.; Novapesca SA; Oceanmundo S.A.; Oceanpro S.A.; Operadora y Procesadora de Products Marinos OMARSA S.A.; Oyerly SA; P.C. Seafood SA; Peslasa S.A.; Phillips Seafood of Ecuador S.A.; Procesadora del Rio Proriosa SA; Procesadora Del Rio S.A. Proriosa; Proriosa sa Procesadora del Rio SA; Seafood Padre Aguirre; Sociedad Nacional de Galapagos C.A.; Soitgar; Tecnica & Comercio de la Pesca Teco; Transmarina C. A.; and Unilines Transport System. Therefore, because no other interested party requested a review for these companies, in accordance with 19 CFR 351.213(d)(1), we are rescinding this review with respect to these companies. Additionally, as noted above, we are rescinding the review of Jorge Luis.

This notice is published in accordance with section 751 of the Tariff Act of 1930, as amended, and 19 CFR 351.213(d)(4).

Dated: July 14, 2006.

Stephen J. Claeys,

Deputy Assistant Secretaryfor Import Administration.

[FR Doc. E6–11546 Filed 7–19–06; 8:45 am]

BILLING CODE 3510–DS–S

DEPARTMENT OF COMMERCE

International Trade Administration

[A–351–838]

Certain Frozen Warmwater Shrimp From Brazil; Partial Rescission of Antidumping Duty; Administrative Review

AGENCY: Import Administration, International Trade Administration, Department of Commerce.

DATES: *Effective Date:* July 20, 2006.

FOR FURTHER INFORMATION CONTACT: Rebecca Trainor or Katherine Johnson, AD/CVD Operations, Office 2, Import Administration, International Trade Administration, U.S. Department of Commerce, 14th Street and Constitution Avenue, NW., Washington, DC 20230; telephone: (202) 482–4007 or (202) 482–4929, respectively.

SUPPLEMENTARY INFORMATION:

Background

On February 1, 2006, the Department of Commerce (the Department) published in the **Federal Register** a notice of opportunity to request an administrative review of the antidumping duty order on certain frozen warmwater shrimp from Brazil for the period August 4, 2004, through January 31, 2006. *See Antidumping or Countervailing Duty Order, Finding, or Suspended Investigation; Opportunity to Request Administrative Review,* 71 FR 5239 (February 1, 2006). On February 28, 2006, Central de Industrializacao E Distribuicao De Alimentos Ltda. (CIDA) and Produmar Cia Exportadora de Produtos Do Mar (Produmar) requested a review of the antidumping duty order on certain frozen warmwater shrimp from Brazil in accordance with 19 CFR 351.213(b)(2). Also on February 28, 2006, the petitioner [1] requested an administrative review for numerous Brazilian exporters of subject merchandise in accordance with 19 CFR 351.213(b)(1).

In April 2006, the Department initiated an administrative review for 50 companies and requested that each provide data on the quantity and value of its exports of subject merchandise to the United States during the period of review (POR). These companies are listed in the Department's notice of initiation. *See Notice of Initiation of Administrative Reviews of the Antidumping Duty Orders on Certain Frozen Warmwater Shrimp from Brazil, Ecuador, India and Thailand,* 71 FR 17819 (April 7, 2006) (*Notice of Initiation*).

Between June 28, 2006, and July 6, 2006, the petitioner withdrew its requests for administrative review for the following 34 companies: [2] (1) Acarau Pesca Distr. De Pesc. Imp e Exp Ltda.; (2) Aquacultura Fortaleza Aquafort SA; (3) Aquamaris Aquaculture SA; (4) Camanor—Produtos Marinhos Ltda.; (5) Camaros do Brasil Ltda.; (6) Camexim Captura Mec Exports Imports; (7) Campi Camaroa do Piaui Ltda.; (8) CIDA-Central de Industrializacao E Distribucao de Alimentos Ltda./ Produmar-Cia Exportadora de Produtos do Mar; (9) Cina Companhia Nordeste de Aquicultura E Alimentacao; (10) Empaf—Empresa de Armazenagem Frigorifica Ltda.; (11) Empresa de Armazenagem Frigorifica Ltda.; (12) Ipesca; (13) Juno Ind & Com de Pescados; (14) Maricultura Netuno SA; (15) Maricultura Rio Grandense; (16) Maricultura Tropical; (17) Marine Maricultura do Nordeste; (18) MM Monteiro Pesca E Exportacao Ltda.; (19) Mucuripe Pesca Ltda., Epp.; (20) Norte Pesca; (21) Ortico; (22) Pesqueira Maguary Ltda.; (23) Pesqueira Maguary Ltda.; (24) Potiguar Alimentos do Mar Ltda.; (25) Potipora Aqualcultura Ltda.; (26) Produvale Produtos do Vale Ltda.; (27) Qualimar Comercio Importacao E Exportacao Ltda.; (28) Secom Aquicultura Comercio E Industria SA; (29) Seafarm Criacao E Comercio de Produtos Aquaticos Ltda.; (30) Sohagro Marina do Nordeste SA; (31) SM

[1] The petitioner in this proceeding is the Ad Hoc Shrimp Trade Action Committee.

[2] Duplicate company names in the petitioner's request for review and request to withdraw are only listed once.

Trading Industria E Comercio Ltda.; (32) Tecmares Maricultura Ltda.; (33) Terracor Tdg Exp. E Imp. Ltda.; and (34) Torquato Pontes Pescados. On July 5, 2006, CIDA withdrew its request for review. Section 351.213(d)(1) of the Department's regulations requires that the Secretary rescind an administrative review if a party requesting a review withdraws the request within 90 days of the date of publication of the notice of initiation.

Partial Rescission of Review

We are rescinding this review with respect to the 34 companies listed above in accordance with 19 CFR 351.213(d)(1), as the petitioner and CIDA have timely withdrawn their requests for an administrative review, and because no other interested party requested a review for these companies.

This notice is published in accordance with section 751 of the Tariff Act of 1930, as amended, and 19 CFR 351.213(d)(4).

Dated: July 14, 2006.

Stephen J. Claeys,

Deputy Assistant Secretary for Import Administration.

[FR Doc. E6–11549 Filed 7–19–06; 8:45 am]

BILLING CODE 3510–DS–P

DEPARTMENT OF COMMERCE

International Trade Administration

[A–549–822]

Certain Frozen Warmwater Shrimp From Thailand; Partial Rescission of Antidumping Duty; Administrative Review

AGENCY: Import Administration, International Trade Administration, Department of Commerce.

DATES: *Effective Date:* July 20, 2006.

FOR FURTHER INFORMATION CONTACT: Irina Itkin or Alice Gibbons, AD/CVD Operations, Office 2, Import Administration, International Trade Administration, U.S. Department of Commerce, 14th Street and Constitution Avenue, NW., Washington, DC 20230; telephone: (202) 482–0656 or (202) 482–0498, respectively.

SUPPLEMENTARY INFORMATION:

Background

On February 1, 2006, the Department of Commerce (the Department) published in the **Federal Register** a notice of opportunity to request an administrative review of the antidumping duty order on certain frozen warmwater shrimp from Thailand for the period August 4, 2004, through January 31, 2006. *See Antidumping or Countervailing Duty Order, Finding, or Suspended Investigation; Opportunity to Request Administrative Review,* 71 FR 5239 (Feb. 1, 2006). On February 28, 2006, in accordance with 19 CFR 351.213(b)(2), certain respondents requested a review of the antidumping duty order on certain frozen warmwater shrimp from Thailand. In addition, on February 28, 2006, the petitioner [1] also requested an administrative review for numerous Thailand exporters of subject merchandise in accordance with 19 CFR 351.213(b)(2)(1).

In April 2006, the Department initiated an administrative review for 145 companies and requested that each provide data on the quantity and value of its exports of subject merchandise to the United States during the period of review (POR). These companies are listed in the Department's notice of initiation. *See Notice of Initiation of Administrative Reviews of the Antidumping Duty Orders on Certain Frozen Warmwater Shrimp from Brazil, Ecuador, India and Thailand,* 71 FR 17819 (Apr. 7, 2006) (*Notice of Initiation*).

Between May 11, 2006, and July 6, 2006, the requests for administrative review were withdrawn for 112 companies, in accordance with 19 CFR 351.213(d)(1). These companies are: (1) ACU Transport (ACU); (2) Ampai Frozen Food, Co., Ltd. (Ampai); (3) Andaman Seafood Co., Ltd. (Andaman); (4) Applied DB Ind (Applied DB); (5) Asian Seafoods Cold Storage Public Company Limited (Asian Seafoods); (6) Asian Seafoods Coldstorage (Suratthani) Co., Ltd. (Asian Seafoods (Suratthani)); (7) Assoc. Commercial Systems; (8) AS Intermarine Foods Co., Ltd. (AS Intermarine); (9) Bright Sea Co., Ltd. (Bright Sea); (10) CP Mdse; (11) C.Y. Frozen Food Co., Ltd. (C.Y. Frozen Food); (12) Capital Food Trade Limited (Capital); (13) Chaivaree Marine Products Co., Ltd. (Chaivaree Marine); (14) Chaiwarut Co., Ltd. (Chaiwarut); (15) Chanthaburi Frozen Food Co., Ltd. (Chanthaburi); (16) Chanthaburi Seafood Co., Ltd. (Chanthaburi Seafoods); (17) Charoen Pokphand Foods Public Company Limited (Charoen Pokphand); (18) Chonburi LC; (19) Chue Eie Mong Eak (Chue Eie); (20) Daedong (Thailand) Co. Ltd. (Daedong); (21) Daiei Taigen (Thailand) Co., Ltd. (Daiei); (22) Daiho (Thailand) Co., Ltd. (Daiho); (23) Dynamic Intertransport (Dynamic); (24) Euro-Asian International Seafoods Co., Ltd. (Euro-Asian); (25) Fait; (26) Findus (Thailand) Limited (Findus); (27) Frozen Marine Products Co., Ltd. (Frozen Marine Products); (28) Good Fortune Cold Storage Co., Ltd. (Good Fortune); (29) Haitai Seafood Co., Ltd. (64/2 Moo 5, Chana-Pattani Road, T. Bana, Amphur Chana, Songkhla, Thailand) [2] (Haitai Songkla); (30) Haitai Seafood Co., Ltd. (946 Room 902 9th Floor, Dusit Thani Building, Rama 4 Road, Silom, Bangrak, Bangkok 10500 Thailand) (Haitai Bangkok); (31) Ham Intl (Ham); (32) Heng Seafood Limited Partnership (Heng); (33) Heritrade; (34) High Way International Co., Ltd. (High Way); (35) Instant Produce; (36) Inter-Pacific Marine Products Co., Ltd. (Inter-Pacific); (37) KD Trdg (KD); (38) Kiang Huat Sea Hull Trading Frozen Food Public Co., Ltd. (Kiang Huat); (39) Kingfisher Holdings Limited (1261 Vicheanchodoc Rd., Tambol Mahachai, Amphur Muang, Samutsakorn 74000 Thailand) [3] (Kingfisher Samutsakorn); (40) Kingfisher Holdings Limited (127/27 22nd Floor, Panjathani Tower Building, Nonsee (Rachadapisek) Road Chongnonsi, Yannawa, Bangkok 10120 Thailand) (Kingfisher Bangkok); (41) Klang Co., Ltd. (200 Moo 1 Sukhumvit Road Khlong Poon Klaeng, Rayong 21170 Thailand) [4] (Klang Rayong); (42) Klang Co., Ltd. (12th Floor, C.P. Tower, 313 Silom Road Bangrak, Bangkok 10500 Thailand) (Klang Bangkok); (43) Kongphop Frozen Foods Co., Ltd. (Kongphop); (44) Leo Transports (Leo); (45) Lucky Union Foods (Lucky Union); (46) Magnate and Syndicate Co., Ltd. (Magnate and Syndicate); (47) Mahachai Food Processing Co., Ltd. (Mahachai); (48) Marine Gold Products Co., Ltd. (Marine Gold); (49) May Ao Co., Ltd. (May Ao); (50) May Ao Foods Co., Ltd. (May Ao Foods); (51) Merkur Co., Ltd. (Merkur); (52) MFK Interfood (MFK); (53) Ming Chao Industrial (Thailand) Co., Ltd. (Ming Chao); (54) N&N Foods Co., Ltd. (N&N); (55) Namprik Maesri (Namprik); (56) Nongmon SMJ Products (Nongmon); (57) Ongkorn Cold Storage Ltd. (Ongkorn); (58) Penta Impex (Penta); (59) Phatthana Seafood Co., Ltd.

[1] The petitioner in this proceeding is the Ad Hoc Shrimp Trade Action Committee.

[2] We note that we initiated two separate reviews on Haitai Seafood Co., Ltd. because the petitioner requested a review of this company and listed two separate addresses. On June 29, 2006, the petitioner withdrew its review requests for this company at both addresses.

[3] We note that we initiated two separate reviews on Kingfisher Holdings Ltd. because the petitioner requested a review of this company and listed two separate addresses. On June 21, 2006, the petitioner withdrew its review requests for this company at both addresses.

[4] We note that we initiated two separate reviews on Klang Co., Ltd. because the petitioner requested a review of this company and listed two separate addresses. On May 11, 2006, the petitioner withdrew its review requests for this company at both addresses.

(Phatthana); (60) Premier Frozen Products Co., Ltd. (Premier); (61) Preserved Foods; (62) Rayong Coldstorage (1987) Co., Ltd. (Rayong); (63) S. Chaivaree Cold Storage Co., Ltd. (S. Chaivaree); (64) S. Khonkaen Food Ind Public (S. Khonkaen Public); (65) S. Khonkaen Food Ind (S. Khonkaen); (66) S.C.C. Frozen Seafood Co., Ltd. (S.C.C.); (67) SCT Co., Ltd. (SCT); (68) Samui Foods (Samui); (69) Sea Bonanza Food Co., Ltd. (332 Soi Pongvetchchanusorn 2, Sukhumvit 64 Road, Bangchak, Prakanong, Bangkok 10260 Thailand) [5](Sea Bonanza Bangkok); (70) Sea Bonanza Food Co., Ltd. (48–49 Sapmahachok, Tambom Nadee, Amphur Moung, Samutsakorn, Thailand) (Sea Bonanza Samutsakorn); (71) Seafoods Enterprise Co., Ltd. (Seafoods Enterprise); (72) Seafresh Fisheries; (73) Seafresh Industry Public Company Limited (Seafresh Industry); (74) Search & Serve; (75) Shianlin Bangkok Co., Ltd.(159 Surawong Road Suriyawong Bangrak, Bangkok 10500 Thailand) (Shianlin Bangkok); (76) Shianlin Bangkok Co., Ltd. (148 Moo 5, Tambol Tasai Muang, Samut Sakorn Thailand) (Shianlin Samut Sakorn); (77) Siam Food Supply Co., Ltd. (Siam Food); (78) Siam Marine Products (Siam Marine); (79) Siam Union Frozen Foods (Siam Union); (80) Sky Fresh; (81) Songkla Canning (Songkla); (82) STC Foodpak Co., Limited (STC); (83) Suntechthai Intertrdg (Suntechthai); (84) Surapon Seafoods Public Co., Ltd. (Surapon); (85) Surat Seafood Co., Ltd. (Surat); (86) Suree Interfoods (Suree); (87) Teppitak Seafood (Teppitak); (88) Tey Seng Cold Storage Company Limited (Tey Seng); (89) Thai Excel Foods Co., Ltd. (Thai Excel); (90) Thai-ger Marine Co., Ltd. (Thai-ger); (91) Thai International Seafoods Co., Ltd. (Thai International); (92) Thai Mahachai Seafood Products Co., Ltd. (Thai Mahachai); (93) Thai Prawn Culture Center Company Limited (Thai Prawn); (94) Thai Royal Frozen Food (Thai Royal); (95) Thai Spring Fish Co., Ltd. (Thai Spring); (96) Thai Union Frozen Products Co., Ltd. (Thai Union Frozen); (97) Thai Union Seafood Co., Ltd. (Thai Union Seafood); (98) Thai Union Mfg. (Thai Union Mfg.); (99) Thai Yoo (Thai Yoo); (100) Thailand Fishery Cold Storage Public Co., Ltd. (Thailand Fishery); (101) Thanaya Intl (Thanaya); (102) The Siam Union Frozen Food Co., Ltd. (The Siam Union); (103) The Union Frozen Products Co., Ltd. (The Union Frozen Products); (104) Trang Seafood Products Public Co., Ltd. (Trang); (105) Transamut Food Co., Ltd. (Transamut); (106) United Cold Storage Co., Ltd. (United Cold Storage); (107) Wales & Co. Universe Ltd. (Wales & Co.); (108) Wann Fisheries Co., Ltd. (Wann); (109) Xian-Ning Seafood Co., Ltd. (Xian-Ning); (110) Y2K Frozen Foods Co., Ltd. (Y2K); (111) Yeenin Frozen Foods Co., Ltd. (Yeenin); and (112) Yong Siam Enterprise Co., Ltd. (Yong). Section 351.213(d)(1) of the Department's regulations requires that the Secretary rescind an administrative review if a party requesting a review withdraws the request within 90 days of the date of publication of the notice of initiation. Therefore, because all requests for administrative reviews were timely withdrawn for the companies listed above, in accordance with 19 CFR 351.213(d)(1), we are rescinding this review with regard to these companies.

Partial Rescission of Review

As noted above, the petitioner and certain respondents withdrew their requests for an administrative review of ACU, Ampai, Andaman, Applied DB, Asian Seafoods, Asian Seafoods (Suratthani), Assoc. Commercial Systems, AS Intermarine, Bright Sea, CP Mdse, C.Y. Frozen Food, Capital, Chaivaree Marine, Chaiwarut, Chanthaburi, Chanthaburi Seafoods, Charoen Pokphand, Chonburi LC, Chue Eie, Daedong, Daiei, Daiho, Dynamic, Euro-Asian, Fait, Findus, Frozen Marine Products, Good Fortune, Haitai Songkla, Haitai Bangkok, Ham, Heng, Heritrade, High Way, Instant Produce, KD, Inter-Pacific, Kiang Huat, Kingfisher Samutsakorn, Kingfisher Bangkok, Klang Rayong, Klang Bangkok, Kongphop, Leo, Lucky Union, Magnate and Syndicate, Mahachai, Marine Gold, May Ao, May Ao Foods, Merkur, MFK, Ming Chao, N&N, Namprik, Nongmon, Ongkorn, Penta, Phatthana, Premier, Preserved Foods, Rayong, S. Chaivaree, S. Khonkaen Public, S. Khonkaen, S.C.C., SCT, Samui, Sea Bonanza Bangkok, Sea Bonanza Samutsakorn, Seafoods Enterprise, Seafresh Fisheries, Seafresh Industry, Search & Serve, Shianlin Bangkok, Shianlin Samut Sakorn, Siam Food, Siam Marine, Siam Union, Sky Fresh, Songkla, STC, Suntechthai, Surapon, Surat, Suree, Teppitak, Tey Seng, Thai Excel, Thai-ger, Thai International, Thai Mahachai, Thai Prawn, Thai Royal, Thai Spring, Thai Union Frozen, Thai Union Seafood, Thai Union Mfg., Thai Yoo, Thailand Fishery, Thanaya, The Siam Union, The Union Frozen Products, Trang, Transamut, United Cold Storage, Wales & Co., Wann, Xian-Ning, Y2K, Yeenin, and Yong within the time limits set forth in 19 CFR 351.213(d)(1). Therefore, because no other interested party requested a review for these companies, in accordance with 19 CFR 351.213(d)(1), we are rescinding this review with respect to these companies.

This notice is published in accordance with section 751 of the Tariff Act of 1930, as amended, and 19 CFR 351.213(d)(4).

Dated: July 14, 2006.

Stephen J. Claeys,

Deputy Assistant Secretary for Import Administration.

[FR Doc. E6–11561 Filed 7–19–06; 8:45 am]

BILLING CODE 3510–DS–P

[5] We note that we initiated two separate reviews on Sea Bonanza Food Co., Ltd. because the petitioner requested a review of this company and listed two separate addresses. On June 29, 2006, the petitioner withdrew its review requests for this company at both addresses.

DEPARTMENT OF COMMERCE

International Trade Administration

[A–570–905]

Initiation of Antidumping Duty Investigation: Certain Polyester Staple Fiber from the People's Republic of China

AGENCY: Import Administration, International Trade Administration, Department of Commerce.

EFFECTIVE DATE: July 20, 2006.

FOR FURTHER INFORMATION CONTACT: Alex Villanueva, AD/CVD Operations, Office 9, Import Administration, International Trade Administration, U.S. Department of Commerce, 14th Street and Constitution Avenue, NW., Washington, DC 20230; telephone: (202) 482–3208.

SUPPLEMENTARY INFORMATION:

Initiation of Investigation

The Petition

On June 23, 2006, the Department of Commerce (''Department'') received a petition on imports of certain polyester staple fiber (PSF) from the People's Republic of China (''PRC'') filed in proper form by Dak Americas LLC., Nan Ya Plastics Corporation America, and Wellman, Inc. (''Petitioners''). The period of investigation (''POI'') is October 1, 2005, through March 31, 2006.

In accordance with section 732(b) of the Tariff Act of 1930, as amended (''the Act''), Petitioners alleged that imports of certain polyester staple fiber from the PRC are being, or are likely to be, sold in the United States at less than fair value within the meaning of section 731 of the Act, and that such imports are materially injuring and threaten to injure an industry in the United States. The Department issued supplemental questions to Petitioners on June 28, 2006, and Petitioners filed their response on July 3, 2006.

Scope of Investigation

The merchandise subject to this proceeding is synthetic staple fibers, not carded, combed or otherwise processed for spinning, of polyesters measuring 3.3 decitex (3 denier, inclusive) or more in diameter. This merchandise is cut to lengths varying from one inch (25 mm) to five inches (127 mm). The subject merchandise may be coated, usually with a silicon or other finish, or not coated. PSF is generally used as stuffing in sleeping bags, mattresses, ski jackets, comforters, cushions, pillows, and furniture.

The following products are excluded from the scope: (1) PSF of less than 3.3 decitex (less than 3 denier) currently classifiable in the Harmonized Tariff Schedule of the United States (''HTSUS'') at subheading 5503.20.0025 and known to the industry as PSF for spinning and generally used in woven and knit applications to produce textile and apparel products; (2) PSF of 10 to 18 denier that are cut to lengths of 6 to 8 inches and that are generally used in the manufacture of carpeting; and (3) low–melt PSF defined as a bi–component fiber with an outer, non–polyester sheath that melts at a significantly lower temperature than its inner polyester core (classified at HTSUS 5503.20.0015).

Certain PSF is classifiable under the HTSUS subheadings 5503.20.0045 and 5503.20.0065. Although the HTSUS subheadings are provided for convenience and customs purposes, the written description of the merchandise under the orders is dispositive.

Comments on Scope of Investigation

During our review of the petition, we discussed the scope with Petitioners to ensure that it accurately reflects the product for which the domestic industry is seeking relief. Moreover, as discussed in the preamble to the Department's regulations, we are setting aside a period for interested parties to raise issues regarding product coverage. *See Antidumping Duties; Countervailing Duties; Final Rule*, 62 FR 27296, 27323 (May 19, 1997). The Department encourages all interested parties to submit such comments within 20 calendar days of publication of this initiation notice. Comments should be addressed to Import Administration's Central Records Unit in Room 1870, U.S. Department of Commerce, 14th Street and Constitution Avenue, NW, Washington, DC 20230 - Attention: Alex Villanueva, Room 4003. The period of scope consultations is intended to provide the Department with ample opportunity to consider all comments and consult with interested parties prior to the issuance of the preliminary determination.

Determination of Industry Support for the Petition

Section 732(b)(1) of the Act requires that a petition be filed by an interested party described in subparagraph (C), (D), (E), (F) or (G), or on behalf of the domestic industry. In order to determine whether a petition has been filed by or on behalf of the industry, the Department, pursuant to section 732(c)(4)(A) of the Act, determines whether a minimum percentage of the relevant industry supports the petition. A petition meets this requirement if the domestic producers or workers who support the petition account for: (i) at least 25 percent of the total production of the domestic like product; and (ii) more than 50 percent of the production of the domestic like product produced by that portion of the industry expressing support for, or opposition to, the petition. Moreover, section 732(c)(4)(D) of the Act provides that, if the petition does not establish support of domestic producers or workers accounting for more than 50 percent of the total production of the domestic like product, the Department shall: (i) poll the industry or rely on other information in order to determine if there is support for the petition, as required by subparagraph (A), or (ii) determine industry support using a statistically valid sampling method.

Section 771(4)(A) of the Act defines the ''industry'' as the producers as a whole of a domestic like product. Thus, to determine whether a petition has the requisite industry support, the statute directs the Department to look to producers and workers who produce the domestic like product. The International Trade Commission (''ITC''), which is responsible for determining whether ''the domestic industry'' has been injured, must also determine what constitutes a domestic like product in order to define the industry. While both the Department and the ITC must apply the same statutory definition regarding the domestic like product (section 771(10) of the Act), they do so for different purposes and pursuant to a separate and distinct authority. In addition, the Department's determination is subject to limitations of time and information. Although this may result in different definitions of the like product, such differences do not render the decision of either agency contrary to law. *See USEC, Inc. v. United States*, 132 F. Supp. 2d 1, 8 (CIT 2001), citing *Algoma Steel Corp. Ltd. v. United States*, 688 F. Supp. 639, 644 (1988), *aff'd* 865 F.2d 240 (Fed. Cir. 1989), *cert. denied* 492 U.S. 919 (1989).

Section 771(10) of the Act defines the domestic like product as ''a product which is like, or in the absence of like, most similar in characteristics and uses with, the article subject to an investigation under this title.'' Thus, the reference point from which the domestic like product analysis begins is ''the article subject to an investigation,'' (i.e., the class or kind of merchandise to be investigated, which normally will be the scope as defined in the petition).

With regard to the domestic like product, the Petitioners do not offer a definition of domestic like product distinct from the scope of the investigation. Based on our analysis of the information submitted on the record, we have determined that certain polyester staple fiber constitutes a single domestic like product and we have analyzed industry support in terms of that domestic like product. For a discussion of the domestic like product analysis in this case, *see* the *Antidumping Investigation Initiation Checklist: Certain Polyester Staple Fiber from the People's Republic of China (''PRC'')*, Industry Support at Attachment I (*Initiation Checklist*), on file in the Central Records Unit, Room B–099 of the main Department of Commerce building.

Our review of the data provided in the petition, supplemental submissions, and other information readily available to the Department indicates that Petitioners have established industry support representing at least 25 percent of the total production of the domestic like product, and more than 50 percent of the production of the domestic like product produced by that portion of the industry expressing support for or opposition to the petition, requiring no further action by the Department pursuant to section 732(c)(4)(D) of the Act. Therefore, the domestic producers (or workers) who support the petition account for at least 25 percent of the total production of the domestic like product, and the requirements of section 732(c)(4)(A)(i) of the Act are met. Furthermore, the domestic producers who support the petition account for more than 50 percent of the production of the domestic like product produced by that portion of the industry expressing support for, or opposition to, the petition. Thus, the requirements of section 732(c)(4)(A)(ii) of the Act also are met. Accordingly, the Department determines that the petition was filed on behalf of the domestic industry within the meaning of section 732(b)(1) of the Act. *See Initiation Checklist* at Attachment I (Industry Support).

The Department finds that Petitioners filed the petition on behalf of the domestic industry because they are an interested party as defined in sections 771(9)(E) and (F) of the Act and they have demonstrated sufficient industry support with respect to the antidumping investigation that they are requesting the Department initiate. *See Initiation Checklist* at Attachment I (Industry Support).

Export Price

Petitioners relied on two U.S. prices for certain polyester staple fiber manufactured in the PRC and offered for sale in the United States. The prices quoted were for a specific grade and quality of PSF falling within the scope of this petition, for delivery to the U.S. customer within the POI. Petitioners deducted from the prices the costs associated with exporting and delivering the product, including U.S. inland freight, ocean freight and insurance charges, U.S. duty, port and wharfage fees, foreign inland freight costs, and foreign brokerage and handling. Petitioners also calculated a margin based on the weighted average unit value data for the POI of imports from the PRC under HTSUS numbers 5503.20.0045 and 5503.20.0065. Petitioners deducted charges and expenses associated with exporting and delivering the product to the customer in the United States from the CIF price, which included ocean freight and insurance charges, foreign inland freight costs, and foreign brokerage and handling.

Normal Value

Petitioners stated that the PRC is a non–market economy (''NME'') and no determination to the contrary has yet been made by the Department. In previous investigations, the Department has determined that the PRC is a NME. *See Notice of Final Determination of Sales at Less Than Fair Value: Magnesium Metal from the People's Republic of China*, 70 FR 9037 (February 24, 2005), *Notice of Final Determination of Sales at Less Than Fair Value: Certain Tissue Paper Products from the People's Republic of China*, 70 FR 7475 (February 14, 2005), and *Notice of Final Determination of Sales at Less Than Fair Value: Certain Frozen and Canned Warmwater Shrimp from the People's Republic of China*, 69 FR 70997 (December 8, 2004). In accordance with section 771(18)(C)(i) of the Act, the presumption of NME status remains in effect until revoked by the Department. The presumption of NME status for the PRC has not been revoked by the Department and remains in effect for purposes of the initiation of this investigation. Accordingly, the normal value (''NV'') of the product is appropriately based on factors of production valued in a surrogate market economy country in accordance with section 773(c) of the Act. In the course of this investigation, all parties will have the opportunity to provide relevant information related to the issues of the PRC's NME status and the granting of separate rates to individual exporters.

Petitioners selected India as the surrogate country. Petitioners argued that, pursuant to section 773(c)(4) of the Act, India is an appropriate surrogate because it is a market–economy country that is at a comparable level of economic development to the PRC and is a significant producer and exporter of polyester staple fiber. Based on the information provided by Petitioners, we believe that its use of India as a surrogate country is appropriate for purposes of initiating this investigation. After the initiation of the investigation, we will solicit comments regarding surrogate country selection. Also, pursuant to 19 CFR 351.301(c)(3)(i), interested parties will be provided an opportunity to submit publicly available information to value factors of production within 40 days after the date of publication of the preliminary determination. Petitioners provided three dumping margin calculations using the Department's NME methodology as required by 19 CFR 351.202(b)(7)(i)(C) and 19 CFR 351.408. Petitioners calculated normal values based on consumption rates for producing polyester staple fiber experienced by U.S. producers. In accordance with section 773(c)(4) of the Act, Petitioners valued factors of production, where possible, on reasonably available, public surrogate country data. To value certain factors of production, Petitioners used official Indian government import statistics, excluding those values from countries previously determined by the Department to be NME countries and excluding imports into India from Indonesia, the Republic of Korea and Thailand, because the Department has previously excluded prices from these countries because they maintain broadly–available, non–industry specific export subsidies. *See Automotive Replacement Glass Windshields From the People's Republic of China: Final Results of Administrative Review*, 69 FR 61790 (October 21, 2004), and accompanying Issues and Decision Memorandum at Comment 5.

For inputs valued in Indian rupees and not contemporaneous with the POI, Petitioners used information from the wholesale price indices (''WPI'') in India as published by the Reserve Bank of India (RBI) for input prices during the period preceding the POI. In addition, Petitioners made currency conversions, where necessary, based on the average rupee/U.S. dollar exchange rate for the POI, as reported on the Department's website.

For the normal value calculations, Petitioners derived the figures for factory overhead, selling, general and administrative expenses (''SG&A''), and profit from the financial ratios of an Indian producer of certain PSF, Reliance Industries Limited.

Fair Value Comparisons

Based on the data provided by Petitioners, there is reason to believe that imports of certain polyester staple fiber from the PRC are being, or are likely to be, sold in the United States at less than fair value. Based upon comparisons of export price to the NV, calculated in accordance with section 773(c) of the Act, the estimated calculated dumping margins for certain polyester staple fiber from the PRC range from 87.43 percent to 108.98 percent.

Allegations and Evidence of Material Injury and Causation

Petitioners allege that the U.S. industry producing the domestic like product is being materially injured, or is threatened with material injury, by reason of the individual and cumulated imports of the subject merchandise sold at less than NV. Petitioners contend that the industry's injured condition is illustrated by the decline in customer base, market share, domestic shipments, prices and financial performance. We have assessed the allegations and supporting evidence regarding material injury and causation, and we have determined that these allegations are properly supported by adequate evidence and meet the statutory requirements for initiation. *See Initiation Checklist* at Attachment II (Injury).

Separate Rates and Quantity and Value Questionnaire

The Department recently modified the process by which exporters and producers may obtain separate–rate status in NME investigations. *See* Policy Bulletin 05.1: Separate–Rates Practice and Application of Combination Rates in Antidumping Investigations involving Non–Market Economy Countries (*Separate Rates and Combination Rates Bulletin*), (April 5, 2005), available on the Department's

Website at http://ia.ita.doc.gov. The process requires the submission of a separate–rate status application. Based on our experience in processing the separate rates applications in the antidumping duty investigations of *Certain Artist Canvas from the People's Republic of China and Diamond Sawblades and Parts Thereof from the People's Republic of China and the Republic of Korea*, we have modified the application for this investigation to make it more administrable and easier for applicants to complete. *See Initiation of Antidumping Duty Investigations: Certain Lined Paper Products from India, Indonesia, and the People's Republic of China*, 70 FR 58374, 58379 (October 6, 2005), *Initiation of Antidumping Duty Investigation: Certain Artist Canvas From the People's Republic of China*, 70 FR 21996, 21999 (April 28, 2005) and *Initiation of Antidumping Duty Investigations: Diamond Sawblades and Parts Thereof from the People's Republic of China and the Republic of Korea*, 70 FR 35625, 35629 (June 21, 2005). The specific requirements for submitting the separate–rates application in this investigation are outlined in detail in the application itself, which will be available on the Department's Website at http://ia.ita.doc.gov/ia–highlights-and–news.html on the date of publication of this initiation notice in the **Federal Register**. The separate rates application is due no later than September 19, 2006.

NME Respondent Selection and Quantity and Value Questionnaire

For NME investigations, it is the Department's practice to request quantity and value information from all known exporters identified in the petition. In addition, the Department typically requests the assistance of the NME government in transmitting the Department's quantity and value questionnaire to all companies who manufacture and export subject merchandise to the United States, as well as to manufacturers who produce the subject merchandise for companies who were engaged in exporting subject merchandise to the United States during the period of investigation. The quantity and value data received from NME exporters is used as the basis to select the mandatory respondents. Although many NME exporters respond to the quantity and value information request, at times some exporters may not have received the quantity and value questionnaire or may not have received it in time to respond by the specified deadline.

The Department requires that the respondents submit a response to both the quantity and value questionnaire and the separate–rates application by the respective deadlines in order to receive consideration for separate–rate status. This procedure will be applied to this and all future investigations. *See Certain Artist Canvas from the People's Republic of China*, 70 FR at 21999, *Diamond Sawblades and Parts Thereof from the People's Republic of China and the Republic of Korea*, 70 FR at 35629, *Initiation of Antidumping Duty Investigation: Certain Activated Carbon from the People's Republic of China*, 71 FR 16757, 16760 (April 4, 2006). Appendix I of this notice contains the quantity and value questionnaire that must be submitted by all NME exporters no later than August 18, 2006. In addition, the Department will post the quantity and value questionnaire along with the filing instructions on the IA Website: http://ia.ita.doc.gov/ia–highlights-and–news.html. The Department will send the quantity and value questionnaire to those exporters identified in Exhibit General–4 of the petition and the NME government.

Use of Combination Rates in an NME Investigation

The Department will calculate combination rates for certain respondents that are eligible for a separate rate in this investigation. The *Separate Rates and Combination Rates Bulletin*, states:

> {w}hile continuing the practice of assigning separate rates only to exporters, all separate rates that the Department will now assign in its NME investigations will be specific to those producers that supplied the exporter during the period of investigation. Note, however, that one rate is calculated for the exporter and all of the producers which supplied subject merchandise to it during the period of investigation. This practice applies both to mandatory respondents receiving an individually calculated separate rate as well as the pool of non–investigated firms receiving the weighted–average of the individually calculated rates. This practice is referred to as the application of ''combination rates'' because such rates apply to specific combinations of exporters and one or more producers. The cash–deposit rate assigned to an exporter will apply only to merchandise both exported by the firm in question and produced by a firm that supplied the exporter during the period of investigation.

Separate Rates and Combination Rates Bulletin, at page 6.

Initiation of Antidumping Investigation

Based upon our examination of the petition on certain polyester staple fiber from the PRC, we find that this petition meets the requirements of section 732 of the Act. Therefore, we are initiating an antidumping duty investigation to determine whether imports of certain polyester staple fiber from the PRC are being, or are likely to be, sold in the United States at less than fair value. Unless postponed, we will make our preliminary determinations no later than 140 days after the date of these initiations.

Distribution of Copies of the Petition

In accordance with section 732(b)(3)(A) of the Act, a copy of the public version of the petition has been provided to the government of the PRC.

International Trade Commission Notification

We have notified the ITC of our initiation, as required by section 732(d) of the Act.

Preliminary Determination by the ITC

The ITC will preliminarily determine, within 25 days after the date on which it receives notice of this initiation, whether there is a reasonable indication that imports of certain polyester staple fiber from the PRC are causing material injury, or threatening to cause material injury, to a U.S. industry. *See* section 733(a)(2)(A)(i) of the Act. A negative ITC determination will result in the investigation being terminated; otherwise, this investigation will proceed according to statutory and regulatory time limits.

This notice is issued and published pursuant to section 777(i) of the Act.

Dated: July 13, 2006.

David M. Spooner,

Assistant Secretary for Import Administration.

APPENDIX I

Where it is not practicable to examine all known producers/exporters of subject merchandise, section 777A(c)(2) of the Tariff Act of 1930 (as amended) permits us to investigate (1) a sample of exporters, producers, or types of products that is statistically valid based on the information available at the time of selection, or (2) exporters and producers accounting for the largest volume and value of the subject merchandise that can reasonably be examined.

In the chart below, please provide the total quantity and total value of all your sales of merchandise covered by the scope of this investigation (see scope section of this notice), produced in the PRC, and exported/shipped to the United States during the period October 1, 2005, through March 31, 2006.

Market	Total Quantity	Terms of Sale	Total Value
United States. . 1. Export Price Sales. 2.. a. Exporter name. b. Address. c. Contact. d. Phone No.. e. Fax No.. 3. Constructed Export Price Sales. 4. Further Manufactured. Total Sales.			

Total Quantity:

- Please report quantity on a metric ton basis. If any conversions were used, please provide the conversion formula and source.

Terms of Sales:

- Please report all sales on the same terms (e.g., free on board).

Total Value:

- All sales values should be reported in U.S. dollars. Please indicate any exchange rates used and their respective dates and sources.

Export Price Sales:

- Generally, a U.S. sale is classified as an export price sale when the first sale to an unaffiliated person occurs before importation into the United States.
- Please include any sales exported by your company directly to the United States.
- Please include any sales exported by your company to a third–country market economy reseller where you had knowledge that the merchandise was destined to be resold to the United States.
- If you are a producer of subject merchandise, please include any sales manufactured by your company that were subsequently exported by an affiliated exporter to the United States.
- Please *do not* include any sales of merchandise manufactured in Hong Kong in your figures.

Constructed Export Price Sales:

Generally, a U.S. sales is classified as a constructed export price sale when the first sale to an unaffiliated person occurs after importation. However, if the first sale to the unaffiliated person is made by a person in the United States affiliated with the foreign exporter, constructed export price applies even if the sale occurs prior to importation.

- Please include any sales exported by your company directly to the United States.
- Please include any sales exported by your company to a third–country market economy reseller where you had knowledge that the merchandise was destined to be resold to the United States.
- If you are a producer of subject merchandise, please include any sales manufactured by your company that were subsequently exported by an affiliated exporter to the United States.
- Please *do not* include any sales of merchandise manufactured in Hong Kong in your figures.

Further Manufactured:

- Further manufacture or assembly costs include amounts incurred for direct materials, labor and overhead, plus amounts for general and administrative expense, interest expense, and additional packing expense incurred in the country of further manufacture, as well as all costs involved in moving the product from the U.S. port of entry to the further manufacturer.

[FR Doc. E6–11547 Filed 7–19–06; 8:45 am]

BILLING CODE 3510–DS–S

DEPARTMENT OF COMMERCE

International Trade Administration

(A–557–809)

Stainless Steel Butt–Weld Pipe Fittings From Malaysia: Notice of Rescission of Antidumping Duty Administrative Review

AGENCY: Import Administration, International Trade Administration, Department of Commerce.

EFFECTIVE DATE: July 20, 2006.

FOR FURTHER INFORMATION CONTACT: Maisha Cryor or Mark Manning, AD/CVD Operations, Office 4, Import Administration, International Trade Administration, U.S. Department of Commerce, 14th Street and Constitution Avenue, NW, Washington, DC 20230; telephone: (202) 482–5831 or (202) 482–5253, respectively.

SUPPLEMENTARY INFORMATION:

Background

On February 1, 2006, the Department of Commerce (the Department) published in the **Federal Register** a notice of ''Opportunity To Request Administrative Review'' of the antidumping duty order on stainless steel butt–weld pipe fittings from Malaysia for the period February 1, 2005, through January 31, 2006. *See Antidumping or Countervailing Duty Order, Finding, or Suspended Investigation; Opportunity To Request Administrative Review*, 71 FR 5239 (February 1, 2006). On February 28, 2006, Sapura–Schulz Hydroforming Sdn. Bhd. (Sapura–Schulz), requested an administrative review of its sales for the above–mentioned period. On February 28, 2006, the petitioners[1]

[1] The petitioners in this segment of the proceeding are: Flowline Division of Markovitz Enterprises, Inc.; Gerlin, Inc.; Shaw Alloy Piping

Continued

requested an administrative review of the sales for the above–mentioned period made by Kanzen Tetsu Sdn. Bhd. (Kanzen) and Sapura–Schulz. On April 5, 2006, the Department published a notice of initiation of an administrative review of the antidumping duty order on stainless steel butt–weld pipe fittings from Malaysia with respect to Sapura–Schulz and Kanzen. *See Initiation of Antidumping and Countervailing Duty Administrative Reviews and Deferral of Administrative Reviews*, 71 FR 25145 (April 5, 2006).

Rescission of Review

On June 19, 2006, Sapura–Schulz and the petitioners simultaneously withdrew their requests for an administrative review of the sales made by Sapura–Schulz during the above–referenced period. Consequently, the Department partially rescinded the review with respect to Sapura–Schulz. *See Stainless Steel Butt–Weld Pipe Fittings From Malaysia: Notice of Partial Rescission of Antidumping Duty Administrative Review*, 71 FR 34304 (July 12, 2006).

On July 5, 2006, the petitioners withdrew their request for an administrative review of sales made by Kanzen. Section 351.213(d)(1) of the Department's regulations requires that the Secretary rescind an administrative review if a party requesting a review withdraws the request within 90 days of the date of publication of the notice of initiation. In this case, the petitioners have withdrawn their request for a review of Kanzen within the 90-day period. We have received no other submissions regarding the withdrawals of the requests for review. Therefore, we are rescinding this review of the antidumping duty order on stainless steel butt–weld pipe fittings from Malaysia.

Assessment

The Department will instruct U.S. Customs and Border Protection (CBP) to assess antidumping duties on all appropriate entries. For those companies for which this review is rescinded, antidumping duties shall be assessed at rates equal to the cash deposit of estimated antidumping duties required at the time of entry, or withdrawal from warehouse, for consumption, in accordance with 19 CFR 351.212(c)(1)(i).

The Department will issue appropriate assessment instructions directly to CBP within 15 days of publication of this notice.

products, Inc.; and Taylor Forge Stainless, Inc. (collectively, the petitioners).

Notification to Importers

This notice serves as a final reminder to importers of their responsibility under 19 CFR 351.402(f) to file a certificate regarding the reimbursement of antidumping duties prior to liquidation of the relevant entries during this review period. Failure to comply with this requirement could result in the Secretary's presumption that reimbursement of antidumping duties occurred and subsequent assessment of double antidumping duties.

This notice serves as a reminder to parties subject to administrative protective order (APO) of their responsibility concerning the disposition of proprietary information disclosed under APO in accordance with 19 CFR 351.305(a)(3). Timely written notification of the return or destruction of APO materials or conversion to judicial protective order is hereby requested. Failure to comply with the regulations and terms of an APO is a sanctionable violation.

This notice is published in accordance with section 751 of the Tariff Act of 1930, as amended, and 19 CFR 351.213(d)(4).

Dated: July 14, 2006.

Stephen J. Claeys,

Deputy Assistant Secretary for Import Administration.

[FR Doc. E6–11551 Filed 7–19–06; 8:45 am]

BILLING CODE 3510–DS–S

DEPARTMENT OF COMMERCE

National Oceanic and Atmospheric Administration

[I.D. 051106A]

Endangered and Threatened Species: Extension of Public Comment Period on Draft Steller Sea Lion Recovery Plan

AGENCY: National Marine Fisheries Service (NMFS), National Oceanic and Atmospheric Administration (NOAA), Commerce.

ACTION: Notice of Availability; extension of public comment period.

SUMMARY: In May 2006, the National Marine Fisheries Service (NMFS) announced the availability for public review of the draft revised recovery plan (plan) for the western and eastern distinct population segments (DPS) of Steller sea lion (*Eumetopias jubatus*). NMFS is extending the public comment period on the recovery plan until September 1, 2006.

DATES: Comments on the draft recovery plan must be received by close of business on September 1, 2006.

ADDRESSES: Send comments to Kaja Brix, Assistant Regional Administrator, Protected Resources Division, Alaska Region, NMFS, Attn: Ellen Walsh, P.O. Box 21668, Juneau, AK 99802. Comments may also be submitted by (1) E-mail to SSLRP@noaa.gov. Include in the subject line the following document identifier: Sea Lion Recovery Plan. E-mail comments, with or without attachments, are limited to 5 megabytes; (2) hand delivery to the Federal Building: 709 W. 9th Street, Juneau, AK; or (3) Facsimile (fax) to 907-586-7012. Interested persons may obtain the plan for review from the above address or on-line from the NMFS Alaska Region website: *http://www.fakr.noaa.gov/*.

FOR FURTHER INFORMATION CONTACT: Shane Capron at 907-271-6620, e-mail *shane.capron@noaa.gov*; or Kaja Brix at 907-586-7235, e-mail *kaja.brix@noaa.gov*.

SUPPLEMENTARY INFORMATION:

Background

On May 24, 2006, NMFS published a notice of availability (NOA) of the plan for the western and eastern DPSs of Steller sea lions (71 FR 29919). The plan contains (1) A comprehensive review of Steller sea lion status and ecology, (2) a review of previous conservation actions, (3) a threats assessment, (4) biological and recovery criteria for downlisting and delisting, (5) actions necessary for the recovery of the species, and (6) estimates of time and cost to recovery. With the publication of the NOA, NMFS announced a 60-day public comment period ending on July 24, 2006.

NMFS has received a request by the North Pacific Fishery Management Council (Council) to extend the public comment period so that its Science and Statistical Committee (SSC) can fully review and provide comments on the plan. Due to the size and scope of the plan, the SSC will not be able to provide its comments to the Council until late August. The Council will then be able to finalize the comments and provide them to NMFS by September 1. Comments from the SSC and Council will be valuable to the recovery planning process especially with regard to the threats assessment and the development of recovery criteria. In this notice NMFS is extending the public comment period until September 1, 2006, in order to allow adequate time for the SSC and others to thoroughly review and thoughtfully comment on the plan.

Authority: 16 U.S.C. 1531 *et seq.*

Dated: July 14, 2006.

Marta Nammack,

Acting Division Chief, Office of Protected Resources, National Marine Fisheries Service.

[FR Doc. E6–11554 Filed 7–19–06; 8:45 am]

BILLING CODE 3510–22–S

DEPARTMENT OF COMMERCE

National Oceanic and Atmospheric Administration

[I.D. 071406F]

RIN 0648-AU28

Fisheries of the Caribbean, Gulf of Mexico, and South Atlantic; South Atlantic Snapper Grouper Fishery Off the Southern Atlantic States; Amendment 14

AGENCY: National Marine Fisheries Service (NMFS), National Oceanic and Atmospheric Administration (NOAA), Commerce.

ACTION: Notice of intent to prepare a draft environmental impact statement; supplement; request for comments.

SUMMARY: The South Atlantic Fishery Management Council (Council) is evaluating in a draft environmental impact statement (DEIS) the environmental impacts of establishing Marine Protected Areas (MPAs) for deepwater snapper grouper species in the South Atlantic exclusive economic zone (EEZ). This notice is intended to supplement a notice published January 31, 2002, announcing the preparation of a DEIS for Amendment 14 to the Fishery Management Plan (FMP).

DATES: Comments must be received by August 21, 2006.

ADDRESSES: Copies of the alternatives should be requested from: Kim Iverson, Public Information Officer, South Atlantic Fishery Management Council, One Southpark Circle, Suite 306, Charleston, SC 29407–4699, fax: 843–769–4520; e-mail: *kim.iverson@safmc.net*.

Comments should be sent to Mark Sramek, Southeast Regional Office, NMFS, 263 13th Avenue South, St. Petersburg, FL 33701, phone: 727–824–5311; fax: 727–824–5308. Comments may also be submitted by email to *Mark.Sramek@noaa.gov*.

FOR FURTHER INFORMATION CONTACT: Kim Iverson, Public Information Officer, South Atlantic Fishery Management Council; toll free 1–866–SAFMC–10 or 843–571–4366; e-mail: *kim.iverson@safmc.net*.

SUPPLEMENTARY INFORMATION: The snapper grouper fishery operating in the South Atlantic EEZ is managed under the South Atlantic Snapper Grouper FMP, under the authority of the Magnuson-Stevens Fishery Conservation and Management Act (Magnuson-Stevens Act).

The Council began considering use of MPAs in 1990. The Council has since held three rounds of scoping meetings and one round of informational public hearings intended to seek public input on criteria, siting, and impacts as they relate to MPAs for deepwater snapper grouper species. The Council decided to consider the implementation of deepwater MPAs in Amendment 14 to the Snapper Grouper FMP. The Notice of Intent (NOI) for the DEIS associated with FMP Amendment 14 was published in the **Federal Register** on January 31, 2002 (67 FR 4696). This NOI supplement is intended to update the public on progress of Amendment 14 and the DEIS. The Council has refined the purpose and need for MPAs and has outlined a range of alternatives for inclusion in the DEIS.

The primary purpose of implementing these MPAs is to employ a collaborative approach to identify MPA sites with the potential to protect a portion of the population and habitat of long-lived, deepwater snapper grouper species (speckled hind, snowy grouper, warsaw grouper, yellowedge grouper, misty grouper, golden tilefish, and blueline tilefish) from directed fishing pressure to achieve a more natural sex ratio, age, and size structure within the proposed MPAs, while minimizing adverse social and economic effects. MPAs are the most effective fishery management tool that allows deepwater snapper grouper species to reach their natural size and age, protects spawning locations, and provides a refuge for early developmental stages of fish species. The Council recognizes that there may be positive impacts from the designation of the proposed sites to non-deepwater species that may co-occur, such as vermilion snapper, red porgy, and gag.

The Council defines MPAs within its jurisdiction as a network of specific areas of marine environments reserved and managed for the primary purpose of aiding in the recovery of overfished stocks and to insure the persistence of healthy fish stocks, fisheries, and habitats. Such areas may be over natural or artificial bottom and may include prohibition of harvest indefinitely (i.e., an undefined time period) to accomplish needed conservation goals.

The following types of actions are available to the Council for designating MPAs. The Council is focusing on Type 2 management actions to protect deepwater snapper grouper species in Amendment 14.

Type 1 - Permanent closure/no-take

Type 2 - Permanent closure/some take allowed

Type 3 - Limited duration closure/no-take

Type 4 - Limited duration closure/some take allowed

The Council is also considering implementing measures to provide for on-site enforcement capabilities, including the utilization of vessel monitoring system equipment on specific categories of fishing vessels. The Council intends to request that NMFS implement regulations to prohibit the use of shark bottom longline gear within the MPAs proposed in this amendment.

The full suite of alternatives currently being considered for inclusion in the DEIS for FMP Amendment 14 can be obtained from the Council (see **ADDRESSES** for contact information).

A **Federal Register** notice will announce the availability of the DEIS associated with the amendment, as well as a 45-day public comment period, pursuant to regulations issued by the Council on Environmental Quality for implementing the National Environmental Policy Act and to NOAA's Administrative Order 216–6. The Council will consider public comments received on the DEIS in developing the FEIS, and before voting to submit the final amendment to NMFS for Secretarial review, approval, and implementation. NMFS will announce in the **Federal Register** the availability of the final amendment and FEIS for public review during the Secretarial review period and will consider all public comments prior to final agency action to approve, disapprove, or partially approve the final amendment.

Authority: 6 U.S.C. 1801 *et seq.*

Dated: July 14, 2006.

Alan D. Risenhoover,

Acting Director, Office of Sustainable Fisheries, National Marine Fisheries Service.

[FR Doc. E6–11552 Filed 7–19–06; 8:45 am]

BILLING CODE 3510–22–S

DEPARTMENT OF COMMERCE

National Oceanic and Atmospheric Administration

[I.D. 071206B]

Taking and Importing of Marine Mammals

AGENCY: National Marine Fisheries Service (NMFS), National Oceanic and Atmospheric Administration (NOAA), Commerce.

ACTION: Notice; affirmative finding renewal.

SUMMARY: The Assistant Administrator for Fisheries, NMFS, (Assistant Administrator) has renewed the affirmative finding for the Republic of El Salvador under the Marine Mammal Protection Act (MMPA). This affirmative finding will allow yellowfin tuna harvested in the Eastern Tropical Pacific Ocean (ETP) in compliance with the International Dolphin Conservation Program (IDCP) by purse seine fishing vessels flying the flag of El Salvador or purse seine fishing vessels operating under the jurisdiction of El Salvador to be imported into the United States. The affirmative finding was based on review of documentary evidence submitted by the Republic of El Salvador and obtained from the Inter-American Tropical Tuna Commission (IATTC) and the U.S. Department of State.

DATES: The renewal is effective from April 1, 2006, through March 31, 2007.

FOR FURTHER INFORMATION CONTACT: Rodney McInnis, Regional Administrator, Southwest Region, NMFS, 501 West Ocean Boulevard, Suite 4200, Long Beach, CA 90802–4213; phone 562–980–4000; fax 562–980–4018.

SUPPLEMENTARY INFORMATION: The MMPA, 16 U.S.C. 1361 *et seq.*, allows the entry into the United States of yellowfin tuna harvested by purse seine vessels in the ETP under certain conditions. If requested by the harvesting nation, the Assistant Administrator will determine whether to make an affirmative finding based upon documentary evidence provided by the Government of the harvesting nation, the IATTC, or the Department of State.

The affirmative finding process requires that the harvesting nation is meeting its obligations under the IDCP and obligations of membership in the IATTC. Every 5 years, the Government of the harvesting nation must request an affirmative finding and submit the required documentary evidence directly to the Assistant Administrator. On an annual basis, NMFS will review the affirmative finding and determine whether the harvesting nation continues to meet the requirements. A nation may provide information related to compliance with IDCP and IATTC measures directly to NMFS on an annual basis or may authorize the IATTC to release the information to NMFS to annually renew an affirmative finding determination without an application from the harvesting nation.

An affirmative finding will be terminated, in consultation with the Secretary of State, if the Assistant Administrator determines that the requirements of 50 CFR 216.24(f) are no longer being met or that a nation is consistently failing to take enforcement actions on violations, thereby diminishing the effectiveness of the IDCP.

As a part of the affirmative finding process set forth in 50 CFR 216.24(f), the Assistant Administrator considered documentary evidence submitted by the Republic of El Salvador or obtained from the IATTC and the Department of State and has determined that El Salvador has met the MMPA's requirements to receive an annual affirmative finding renewal.

After consultation with the Department of State, the Assistant Administrator issued the Republic of El Salvador's annual affirmative finding renewal, allowing the continued importation into the United States of yellowfin tuna and products derived from yellowfin tuna harvested in the ETP by El Salvadorian-flag purse seine vessels or purse seine vessels operating under El Salvadorian jurisdiction. El Salvador's affirmative finding will remain valid through March 31, 2007, subject to subsequent annual reviews by NMFS.

Dated: July 14, 2006.

Samuel D. Rauch, III,

Deputy Assistant Administrator for Regulatory Programs, National Marine Fisheries Service.

[FR Doc. E6–11553 Filed 7–19–06; 8:45 am]

BILLING CODE 3510–22–S

COMMITTEE FOR THE IMPLEMENTATION OF TEXTILE AGREEMENTS

Designation under the Textile and Apparel Commercial Availability Provisions of the Andean Trade Promotion and Drug Eradication Act (ATPDEA)

July 17, 2006.

AGENCY: The Committee for the Implementation of Textile Agreements (CITA)

ACTION: Designation

EFFECTIVE DATE: July 20, 2006

SUMMARY: The Committee for the Implementation of Textile Agreements (CITA) has determined that certain polyester and nylon yarns, of the specifications detailed below, classified in subheadings 5402.31.6000, 5402.62.0000, and 5605.00.1000 of the Harmonized Tariff Schedule of the United States (HTSUS), cannot be supplied by the domestic industry in commercial quantities in a timely manner. CITA hereby designates apparel articles containing lace fabrics of such yarns, that are sewn or otherwise assembled in one or more eligible ATPDEA beneficiary countries from such fabrics, as eligible for quota free and duty free treatment under the textile and apparel commercial availability provisions of the ATPDEA and eligible under HTSUS subheading 9821.11.10, provided that all other fabrics in the apparel articles are wholly formed in the United States from yarns wholly formed in the United States, including fabrics not formed from yarns, if such yarns are classifiable under HTSUS heading 5602 or 5603, and are wholly formed in the United States. CITA notes that this designation under the ATPDEA renders apparel articles containing lace fabrics of such yarn, sewn or otherwise assembled in an eligible ATPDEA beneficiary country, as eligible for quota-free and duty-free treatment under HTSUS subheading 9821.11.13, provided the requirements of that subheading are met.

FOR FURTHER INFORMATION CONTACT: Maria K. Dybczak, Office of Textiles and Apparel, U.S. Department of Commerce, (202) 482 3400.

SUPPLEMENTARY INFORMATION:

Authority: Section 204 (b)(3)(B)(ii) of the ATPDEA, Presidential Proclamation 7616 of October 31, 2002, Executive Order 13277 of November 19, 2002, and the United States Trade Representative's Notice of Further Assignment of Functions of November 25, 2002.

Background:

The ATPDEA provides for duty-free treatment for qualifying textile and apparel products. Such treatment is generally limited to products manufactured from yarns and fabrics formed in the United States or a beneficiary country. The ATPDEA also provides for quota- and duty-free treatment for apparel articles that are both cut (or knit-to-shape) and sewn or otherwise assembled in one or more beneficiary countries from fabric or yarn that is not formed in the United States, if it has been determined that such fabric or yarn cannot be supplied by the domestic industry in commercial quantities in a timely manner. In Executive Order No. 13191 (66 FR 7271) and pursuant to Executive Order No. 13277 (67 FR 70305) and the United States Trade Representative's Notice of Redelegation of Authority and Further Assignment of Functions (67 FR 71606), the President delegated to CITA the

authority to determine whether yarns or fabrics cannot be supplied by the domestic industry in commercial quantities in a timely manner under the ATPDEA. On March 6, 2001, CITA published procedures that it will follow in considering requests (66 FR 13502).

On March 9, 2006, the Chairman of CITA received a petition from Encajes, S.A. Colombia, alleging that certain polyester and nylon yarns, as described below, cannot be supplied by the domestic industry in commercial quantities in a timely manner. It requested quota- and duty-free treatment under the ATPDEA for apparel articles that contain lace fabrics of such yarns that are sewn or otherwise assembled in one or more ATPDEA beneficiary countries.

Specifications:

1. Mamilon Metallic Yarn, G-100 1/69	
HTSUS subheading:	5605.00.1000
Fiber Content:	100% Metallic Covered in Polyester
Cut:	Flat
Color:	Silver and Gold
Yarn Size:	Silver- 115 denier; Gold - 126 denier
Yarn Type:	Flat, non-textured
Yarn width:	25 microns
2. Cationic Polyester BR 305f96, 120 Ts (Rigid Poly)	*
HTSUS subheading:	5402.62.0000
Fiber Content:	100% Cationic Polyester
Cut:	Trilobal
Color:	Bright
Yarn Type:	Flat, non-textured
Yarn Size:	305 decitex, 96 filaments with 120 twists in ''S'' by meter
3. Cationic Polyester Bright Flat 2/78F48 dtex at 120 Ts	
HTSUS subheading:	5402.62.0000
Fiber Content:	100% Cationic Polyester
Cut:	Trilobal
Color:	Bright
Yarn Type:	Flat, non-textured
Yarn Size:	78 decitex, 48 filaments, plied, with 120 twists in ''S'' by meter
4. Tactel Bright	
HTSUS subheading:	5402.31.6000
Fiber Content:	100% Polyamide 6.6 High Tenacity Nylon
Cut:	Trilobal
Color:	Bright
Yarn Type:	Textured
Yarn Size:	312 decitex, 102 filaments, plied, with 450 twists in ''S'' by meter

On March 15, 2006, CITA requested public comments on the petition. See *Request for Public Comments on Commercial Availability Petition Under ATPDEA*, 71 FR 13360 (Mar. 15, 2006).

On March 31, 2006, CITA and the Office of the U.S. Trade Representative (USTR) sent memoranda seeking the advice of the Industry Trade Advisory Committees (ITAC) for Textiles and Clothing and for Distribution Services. No advice was received from either ITAC. On March 31, 2006, CITA and the USTR offered to hold consultations with the Committee on Ways and Means of the House of Representatives and the Committee on Finance of the Senate (collectively, the Congressional Committees). USTR requested the advice of the U.S. International Trade Commission (ITC) on the probable economic effects on the domestic industry of granting the request. On April 20, 2006, the ITC provided advice on the petition.

Based on the information and advice received and its understanding of the industry, CITA determined that the yarns set forth in the petition cannot be supplied by the domestic industry in commercial quantities in a timely manner. On May 8, 2006, CITA and USTR submitted a report to the Congressional Committees that set forth the action proposed, the reasons for such action, and the advice obtained. A period of 60 calendar days since this report was submitted has expired.

CITA hereby designates as eligible to enter free of quotas and duties under HTSUS subheading 9821.11.10, apparel articles containing lace fabrics of such yarns, of the specifications detailed above, that are sewn or otherwise assembled in one or more eligible ATPDEA beneficiary countries. Apparel article containing lace fabrics of such yarns shall be eligible to enter free of quotas and duties under this subheading, provided all other yarns used in the apparel articles are U.S. formed and all other fabrics used in the apparel articles are U.S. formed from yarns wholly formed in the United States, including fabrics not formed from yarns, if such yarns are classifiable under HTSUS heading 5602 or 5603, and are wholly formed in the United States, subject to the special rules for findings and trimmings, certain interlinings and de minimis fibers and yarns under section 204(b)(3)(B)(vi) of the ATPDEA, and that such articles are imported directly into the customs territory of the United States from an eligible ATPDEA beneficiary country.

An ''eligible ATPDEA beneficiary country'' means a country which the President has designated as an ATPDEA beneficiary country under section 203(a)(1) of the Andean Trade Preference Act (ATPA) (19 U.S.C. 3202(a)(1)), and which has been the subject of a finding, published in the **Federal Register**, that the country has satisfied the requirements of section 203(c) and (d) of the ATPA (19 U.S.C. 3202(c) and (d)), resulting in the enumeration of such country in U.S. note 1 to subchapter XXI of Chapter 98 of the HTSUS.

James C. Leonard III,

Chairman, Committee for the Implementation of Textile Agreements.

[FR Doc. E6–11555 Filed 7–19–06; 8:45 am]

BILLING CODE 3510–DS–S

DEPARTMENT OF DEFENSE

Department of the Army

Intent To Grant an Exclusive License of a U.S. Government-Owned Patent Application

AGENCY: Department of the Army, DoD.

ACTION: Notice.

SUMMARY: In accordance with 35 U.S.C. 209(e) and 37 CFR 404.7(a)(I)(i), announcement is made of the intent to grant an exclusive, royalty-bearing, revocable license to U.S. patent application number 11/238,155 filed September 28, 2005 entitled ''MVA Expressing Modified HIV envelope, gag, and pol Genes,'' and foreign rights to Henry M. Jackson Foundation for the Advancement of Military Medicine with its principal place of business at 1401 Rockville Pike, Suite 600, Rockville, MD 20852. This invention is jointly owned by the Henry M. Jackson Foundation for the Advancement of Military Medicine, the National Institutes of Health, and the U.S. Army.

ADDRESSES: Commander, U.S. Army Medical Research and Materiel Command, ATTN: Command Judge Advocate, MCMR–JA, 504 Scott Street, Fort Detrick, Frederick, MD 21702–5012.

FOR FURTHER INFORMATION CONTACT: For patent issues, Ms. Elizabeth Arwine, Patent Attorney, (301) 619–7808. For licensing issues, Dr. Paul Mele, Office of Research & Technology Assessment, (301) 619–6664, both at telefax (301) 619–5034.

SUPPLEMENTARY INFORMATION: Anyone wishing to object to the grant of this license can file written objections along with supporting evidence, if any, within 15 days from the date of this publication. Written objections are to be

filed with the Command Judge Advocate (see **ADDRESSES**).

Brenda S. Bowen,

Army Federal Register Liaison Officer.

[FR Doc. 06–6363 Filed 7–19–06; 8:45 am]

BILLING CODE 3710–08–M

DEPARTMENT OF EDUCATION

Notice of Extension of Obligation Deadline for the Emergency Impact Aid for Displaced Students Program Under Section 107 of the Hurricane Education Recovery Act, Division B, Title IV of Public Law 109–148

AGENCY: Office of Elementary and Secondary Education, Department of Education.

SUMMARY: The Secretary extends, to September 30, 2006, the obligation deadline for all State educational agency (SEA) grantees and local educational agency (LEA) subgrantees under the Emergency Impact Aid for Displaced Students (Emergency Impact Aid) program for fiscal year (FY) 2006. We take this action because additional funding for this program for necessary expenses related to the consequences of Hurricanes Katrina and Rita of the 2005 hurricane season was recently made available under Title II, Chapter 6 of the Emergency Supplemental Appropriations Act for Defense, the Global War on Terror, and Hurricane Recovery, 2006, Public Law 109–234.

FOR FURTHER INFORMATION CONTACT: Ms. Catherine Schagh, Director, Impact Aid Program, U.S. Department of Education, 400 Maryland Avenue, SW., room 3E105, Washington, DC 20202–6244. Telephone: (202) 260–3858 or by e-mail: *Impact.Aid@ed.gov.*

If you use a telecommunications device for the deaf (TDD), call the Federal Relay Service (FRS) at 1–800–877–8339. Individuals with disabilities can obtain this document in an alternative format (*e.g.*, Braille, large print, audiotape, or computer diskette) on request to the program contact person listed in this section.

SUPPLEMENTARY INFORMATION:

Background

On January 12, 2006, we published a notice in the **Federal Register** (71 FR 2027) announcing the initial availability of funds and application deadline for assistance under the Emergency Impact Aid program. The notice included a number of application requirements regarding deadlines and student enrollment data and also indicated that all SEAs, LEAs, and Bureau of Indian Affairs (BIA)-funded schools must obligate all funds received under section 107 of the Hurricane Education Recovery Act by July 31, 2006.

On June 15, 2006, the President signed H.R. 4939, the Emergency Supplemental Appropriations Act for Defense, the Global War on Terror, and Hurricane Recovery, 2006, Public Law 109–234. This law made an additional $235,000,000 available for the Emergency Impact Aid program and provided us with the authority to extend the obligation period for the use of the new and initial section 107 funds until September 30, 2006. The Secretary is granting this extension to all SEA grantees and LEA or BIA-funded school subgrantees that find it necessary to use it, provided that all section 107 funds are used only for expenses incurred during the 2005–2006 school year. We strongly encourage all entities to make their best effort to complete all obligations in advance of the September 30 date to avoid the lapse of these funds. This action does not change any of the other requirements included in the initial January 12, 2006, notice published in the **Federal Register** or in the program guidance.

Electronic Access to This Document: You may view this document, as well as all other documents of this Department published in the **Federal Register**, in text or Adobe Portable Document Format (PDF) on the Internet at the following site: *http://www.ed.gov/news/fedregister.*

To use PDF you must have Adobe Acrobat Reader, which is available free at this site. If you have questions about using PDF, call the U.S. Government Printing Office (GPO), toll free, at 1–888–293–6498; or in the Washington, DC, area at (202) 512–1530.

Note: The official version of this document is the document published in the **Federal Register**. Free Internet access to the official edition of the **Federal Register** and the Code of Federal Regulations is available on GPO Access at: *http://www.gpoaccess.gov/nara/index.html.*

(Catalog of Federal Domestic Assistance Number 84.938C Emergency Impact Aid for Displaced Students)

Program Authority: Division B, Title IV of Pub. L. 109–148 and Title II, Chapter 6 of Pub. L. 109–234.

Dated: July 17, 2006.

Henry L. Johnson,

Assistant Secretary for Elementary and Secondary Education.

[FR Doc. E6–11560 Filed 7–19–06; 8:45 am]

BILLING CODE 4000–01–P

ENVIRONMENTAL PROTECTION AGENCY

[EPA–HQ–OECA–2005–0020; FRL–8200–7]

Agency Information Collection Activities; Submission to OMB for Review and Approval; Comment Request; NESHAP for Benzene Waste Operations (Renewal), EPA ICR Number 1541.08, OMB Control Number 2060–0183

AGENCY: Environmental Protection Agency.

ACTION: Notice.

SUMMARY: In compliance with the Paperwork Reduction Act (44 U.S.C. 3501 *et seq.*), this document announces that an Information Collection Request (ICR) has been forwarded to the Office of Management and Budget (OMB) for review and approval. This is a request to renew an existing approved collection. The ICR, which is abstracted below, describes the nature of the collection and the estimated burden and cost.

DATES: Additional comments may be submitted on or before August 21, 2006.

ADDRESSES: Submit your comments, referencing docket ID number EPA–HQ–OECA–2005–0020, to (1) EPA online using *www.regulations.gov* (our preferred method); or by e-mail to *docket.oeca@epa.gov;* or by mail to: EPA Docket Center (EPA/DC), Environmental Protection Agency, Enforcement and Compliance Docket and Information Center, mail code 2201T, 1200 Pennsylvania Avenue, NW., Washington, DC 20460, and (2) OMB at: Office of Information and Regulatory Affairs, Office of Management and Budget (OMB), Attention: Desk Officer for EPA, 725 17th Street, NW., Washington, DC 20503.

FOR FURTHER INFORMATION CONTACT: María Malavé, Compliance Assessment and Media Programs Division (Mail Code 2223A), Office of Compliance, Environmental Protection Agency, 1200 Pennsylvania Avenue, NW., Washington, DC 20460; telephone number: (202) 564–7027; fax number: (202) 564–0050; e-mail address: *malave.maria@epa.gov.*

SUPPLEMENTARY INFORMATION: EPA has submitted the following ICR to OMB for review and approval according to the procedures prescribed in 5 CFR 1320.12. On May 6, 2005 (70 FR 24020), EPA sought comments on this ICR pursuant to 5 CFR 1320.8(d). EPA received no comments. Any additional comments on this ICR should be submitted to EPA and OMB within 30 days of this notice.

EPA has established a public docket for this ICR under docket ID number EPA–HQ–OECA–2005–0020, which is available for public viewing online at *www.regulations.gov,* or via in-person viewing at the Enforcement and Compliance Docket in the EPA Docket Center (EPA/DC), EPA West, Room B102, 1301 Constitution Avenue, NW., Washington, DC. The EPA Docket Center Public Reading Room is open from 8:30 a.m. to 4:30 p.m., Monday through Friday, excluding legal holidays. The telephone number for the Reading Room is (202) 566–1744, and the telephone number for the Enforcement and Compliance Docket is (202) 566–1927.

Use EPA's electronic docket and comment system at *www.regulations.gov,* to submit or view public comments, access the index listing of the contents of the docket, and to access those documents in the docket that are available electronically. Once in the system, select ''docket search,'' then key in the docket ID number identified above. Please note that EPA's policy is that public comments, whether submitted electronically, or in paper, will be made available for public viewing at *www.regulations.gov,* as EPA receives them and without change, unless the comment contains copyrighted material, CBI, or other information whose public disclosure is restricted by statute. For further information about the electronic docket, go to *www.regulations.gov.*

Title: NESHAP for Benzene Waste Operations (Renewal).

ICR Numbers: EPA ICR Number 1541.08, OMB Control Number 2060–0183.

ICR Status: This ICR is scheduled to expire on August 31, 2006. Under OMB regulations, the Agency may continue to conduct or sponsor the collection of information while this submission is pending at OMB. An Agency may not conduct or sponsor, and a person is not required to respond to, a collection of information unless it displays a currently valid OMB control number. The OMB control numbers for EPA's regulations in title 40 of the CFR, after appearing in the **Federal Register** when approved, are listed in 40 CFR part 9, and displayed either by publication in the **Federal Register,** or by other appropriate means, such as on the related collection instrument or form, if applicable. The display of OMB control numbers in certain EPA regulations is consolidated in 40 CFR part 9.

Abstract: The National Emission Standards for Hazardous Air Pollutants (NESHAP) for the regulations published at 40 CFR part 61, subpart FF were proposed on September 14, 1989, and promulgated on March 7, 1990. These regulations apply to facilities that generate waste containing benzene, such as chemical manufacturing plants, coke by-product recovery plants, petroleum refineries, and those owners and operators of hazardous waste treatment, storage, and disposal facilities (TSDF) which receive wastes from the above facilities, commencing construction, modification or reconstruction after the date of the proposal. This information is being collected to assure compliance with 40 CFR part 61, subpart FF.

The monitoring, recordkeeping, and reporting requirements outlined in these rules are similar to those required for other NESHAP regulations. Consistent with the NESHAP General Provisions (40 CFR part 63, subpart A), respondents are required to submit initial notifications, conduct performance tests, and submit quarterly or semiannual reports, as applicable. They also are required to maintain records of applicability determinations; performance test results; exceedances; periods of startup, shutdown, or malfunction; monitoring records, and all other information needed to determine compliance with the applicable standards. An owner, or operator subject to the provisions of this part shall maintain a file of these measurements, and retain the file for at least five years following the date of such measurements, maintenance reports, and records. Records and reports must be retained for a total of two years. The files may be maintained on microfilm, on a computer, or floppy disks, on magnetic tape disks, or on microfiche. All reports are sent to the delegated state or local authority. In the event that there is no such delegated authority, the reports are sent directly to the appropriate United States Environmental Protection Agency (EPA) regional office.

Burden Statement: The annual public reporting and recordkeeping burden for this collection of information is estimated to average 71 hours per response. Burden means the total time, effort, or financial resources expended by persons to generate, maintain, retain, or disclose, or provide information to, or for a Federal agency. This includes the time needed to review instructions; develop, acquire, install, and utilize technology and systems for the purposes of collecting, validating, and verifying information, processing and maintaining information, and disclosing and providing information; adjust the existing ways to comply with any previously applicable instructions and requirements which have subsequently changed; train personnel to be able to respond to a collection of information; search data sources; complete and review the collection of information; and transmit, or otherwise disclose the information.

Respondents/Affected Entities: Owners or operators of benzene waste operations.

Estimated Number of Respondents: 234.

Frequency of Response: On occasion, semiannually, quarterly and initially.

Estimated Total Annual Hour Burden: 16,626.

Estimated Total Annual Capital and Operations and Maintenance Costs: $0.00.

Changes in the Estimates: There are no changes in the burden calculation for the renewal of this ICR since we have assumed that there has been no change in the industry burden since the last ICR was approved.

Dated: July 12, 2006.

Sara Hisel-McCoy,

Acting Director, Collection Strategies Division.

[FR Doc. E6–11524 Filed 7–19–06; 8:45 am]

BILLING CODE 6560–50–P

ENVIRONMENTAL PROTECTION AGENCY

[EPA–HQ–OECA–2005–0051; FRL–8200–9]

Agency Information Collection Activities; Submission to OMB for Review and Approval; Comment Request; NESHAP for Asphalt Processing and Asphalt Roofing Manufacturing (Renewal), EPA ICR Number 2029.03, OMB Control Number 2060–0520

AGENCY: Environmental Protection Agency.

ACTION: Notice.

SUMMARY: In compliance with the Paperwork Reduction Act (44 U.S.C. 3501 *et seq.*), this document announces that an Information Collection Request (ICR) has been forwarded to the Office of Management and Budget (OMB) for review and approval. This is a request to renew an existing approved collection. The ICR, which is abstracted below, describes the nature of the collection and the estimated burden and cost.

DATES: Additional comments may be submitted on or before August 21, 2006.

ADDRESSES: Submit your comments, referencing docket ID number EPA–HQ–OECA–2005–0051, to (1) EPA online using *http://www.regulations.gov* (our preferred method), or by e-mail to

docket.oeca@epa.gov, or by mail to: EPA Docket Center (EPA/DC), Environmental Protection Agency, Enforcement and Compliance Docket and Information Center, mail code 2201T, 1200 Pennsylvania Avenue, NW., Washington, DC 20460, and (2) OMB at: Office of Information and Regulatory Affairs, Office of Management and Budget (OMB), Attention: Desk Officer for EPA, 725 17th Street, NW., Washington, DC 20503.

FOR FURTHER INFORMATION CONTACT: María Malavé, Compliance Assessment and Media Programs Division (Mail Code 2223A), Office of Compliance, Environmental Protection Agency, 1200 Pennsylvania Avenue, NW., Washington, DC 20460; telephone number: (202) 564–7027; fax number: (202) 564–0050; e-mail address: *malave.maria@epa.gov.*

SUPPLEMENTARY INFORMATION: EPA has submitted the following ICR to OMB for review and approval according to the procedures prescribed in 5 CFR 1320.12. On May 6, 2005 (70 FR 24020), EPA sought comments on this ICR pursuant to 5 CFR 1320.8(d). EPA received no comments. Any additional comments on this ICR should be submitted to EPA and OMB within 30 days of this notice.

EPA has established a public docket for this ICR under docket ID number EPA–HQ–OECA–2005–0051, which is available for online viewing at *http://www.regulations.gov,* or in person viewing at the Enforcement and Compliance Docket and Information Center in the EPA Docket Center (EPA/DC), EPA West, Room B102, 1301 Constitution Avenue, NW., Washington, DC. The EPA Docket Center Public Reading Room is open from 8:30 a.m. to 4:30 p.m., Monday through Friday, excluding legal holidays. The telephone number for the Reading Room is (202) 566–1744, and the telephone number for the Enforcement and Compliance Docket is (202) 566–1927.

Use EPA's electronic docket and comment system at *http://www.regulations.gov,* to submit or view public comments, access the index listing of the contents of the docket, and to access those documents in the docket that are available electronically. Once in the system, select ''docket search,'' then key in the docket ID number identified above. Please note that EPA's policy is that public comments, whether submitted electronically or in paper, will be made available for public viewing at *http://www.regulations.gov,* as EPA receives them and without change, unless the comment contains copyrighted material, CBI, or other information whose public disclosure is restricted by statute. For further information about the electronic docket, go to *http://www.regulations.gov.*

Title: NESHAP for Asphalt Processing and Asphalt Roofing Manufacturing (Renewal).

ICR Numbers: EPA ICR Number 2029.03, OMB Control Number 2060–0520.

ICR Status: This ICR is scheduled to expire on August 31, 2006. Under OMB regulations, the Agency may continue to conduct or sponsor the collection of information while this submission is pending at OMB. An Agency may not conduct or sponsor, and a person is not required to respond to, a collection of information unless it displays a currently valid OMB control number. The OMB control numbers for EPA's regulations in title 40 of the CFR, after appearing in the **Federal Register** when approved, are listed in 40 CFR part 9, and displayed either by publication in the **Federal Register** or by other appropriate means, such as on the related collection instrument or form, if applicable. The display of OMB control numbers in certain EPA regulations is consolidated in 40 CFR part 9.

Abstract: The National Emission Standards for Hazardous Air Pollutants (NESHAP) for NESHAP for Asphalt Processing and Asphalt Roofing Manufacturing were proposed on January 10, 1989, and promulgated on November 20, 1990 (55 FR 48414). These standards apply to new and existing facilities that manufacture asphalt roofing products or oxidized asphalt that are major sources of hazardous air pollutants (HAPs), or are collocated at major sources. This information is being collected to assure compliance with 40 CFR part 63, subpart LLLLL.

Owners and operators of affected sources are subject to the monitoring, recordkeeping and reporting requirements of 40 CFR part 63, subpart A, the General Provisions, unless specified otherwise in the regulation. This rule requires sources to submit initial notifications, conduct performance tests if the source is using an add-on control device, and submit periodic compliance reports. In addition, sources are required to maintain records of the occurrence and duration of any startup, shutdown, or malfunction in the operation if using an add-on control device; any period during which the monitoring system is inoperative; parametric monitoring data; system maintenance and calibration; and work practices to demonstrate initial and ongoing compliance with the regulation. Records of such measurements and actions are to be retained two years on-site of the required total five years. All reports are sent to the delegated state or local authority. In the event that there is no such delegated authority, the reports are sent directly to the EPA regional office.

Burden Statement: The annual public reporting and recordkeeping burden for this collection of information is estimated to average 223 hours per response. Burden means the total time, effort, or financial resources expended by persons to generate, maintain, retain, or disclose or provide information to or for a Federal agency. This includes the time needed to review instructions; develop, acquire, install, and utilize technology and systems for the purposes of collecting, validating, and verifying information, processing and maintaining information, and disclosing and providing information; adjust the existing ways to comply with any previously applicable instructions and requirements which have subsequently changed; train personnel to be able to respond to a collection of information; search data sources; complete and review the collection of information; and transmit or otherwise disclose the information.

Respondents/Affected Entities: Owners or operators of facilities that manufacture asphalt roofing products or oxidized asphalt.

Estimated Number of Respondents: 24.

Frequency of Response: On occasion, semiannually, and initially.

Estimated Total Annual Hour Burden: 12,017.

Estimated Total Annual Cost: $25,407, includes O&M costs only.

Changes in the Estimates: The increase from 1,962 hours to 12,017 hours in the annual labor burden to industry from the most recently approved ICR is due to adjustments. The increase in burden from the most recently approved ICR is due to an increase from 19 to 22 in the number of existing sources and the assumption that all existing sources are in full compliance with the rule's initial and on-going requirements since the compliance date has passed, May 1, 2006. All respondents are currently recording operating parameters and submitting semiannual compliance reports to comply with rule requirement compared to only new respondents in the active ICR.

The decrease from $277,684 to $25,407 in the total annualized capital and operations and maintenance (O&M) costs is due to no startup capital costs being attributed to this rule since monitors are an integral part of the control equipment necessary to

determine if it is operating properly, and a decrease in the contractor's costs associated with performance tests based on the assumption that all existing respondents are in full compliance with the rule requirements.

Dated: July 11, 2006.

Sara Hisel McCoy,

Acting Director, Collection Strategies Division.

[FR Doc. E6–11525 Filed 7–19–06; 8:45 am]

BILLING CODE 6560–50–P

ENVIRONMENTAL PROTECTION AGENCY

[EPA–HQ–RCRA–2006–0069 FRL–8200–5]

Agency Information Collection Activities; Submission to OMB for Review and Approval; Comment Request; Part B Permit Application, Permit Modifications, and Special Permits (Renewal), EPA ICR Number 1573.11, OMB Control Number 2050–0009

AGENCY: Environmental Protection Agency.

ACTION: Notice.

SUMMARY: In compliance with the Paperwork Reduction Act (44 U.S.C. 3501 *et seq.*), this document announces that an Information Collection Request (ICR) has been forwarded to the Office of Management and Budget (OMB) for review and approval. This is a request to renew an existing approved collection. This ICR is scheduled to expire on July 31, 2006. Under OMB regulations, the Agency may continue to conduct or sponsor the collection of information while this submission is pending at OMB. This ICR describes the nature of the information collection and its estimated burden and cost.

DATES: Additional comments may be submitted on or before August 21, 2006.

ADDRESSES: Submit your comments, referencing docket ID number EPA–HQ–RCRA–2006–0069, to (1) EPA online using *www.regulations.gov* (our preferred method), or by mail to: Resource Conservation and Recovery Act (RCRA) Docket (5305T), U.S. Environmental Protection Agency, 1200 Pennsylvania Avenue, NW., Washington, DC 20460; and (2) OMB by mail to: Office of Information and Regulatory Affairs, Office of Management and Budget (OMB), Attention: Desk Officer for EPA, 725 17th Street, NW., Washington, DC 20503.

FOR FURTHER INFORMATION CONTACT: Toshia King, Office of Solid Waste, mailcode 5303W, Environmental Protection Agency, 1200 Pennsylvania Ave., NW., Washington, DC 20460; telephone number: 703–308–7033; fax number: 703–308–8617; e-mail address: *king.toshia@epa.gov.*

SUPPLEMENTARY INFORMATION: EPA has submitted the following ICR to OMB for review and approval according to the procedures prescribed in 5 CFR 1320.12. On February 16, 2006 (71 FR 8301), EPA sought comments on this ICR pursuant to 5 CFR 1320.8(d). EPA received no comments. Any additional comments on this ICR should be submitted to EPA and OMB within 30 days of this notice.

EPA has established a public docket for this ICR under Docket ID No. EPA–HQ–RCRA–2006–0069, which is available for online viewing at *www.regulations.gov,* or in person viewing at the RCRA Docket in the EPA Docket Center (EPA/DC), EPA West, Room B102, 1301 Constitution Ave., NW., Washington, DC. The EPA/DC Public Reading Room is open from 8 a.m. to 4:30 p.m., Monday through Friday, excluding legal holidays. The telephone number for the Reading Room is 202–566–1744, and the telephone number for RCRA Docket is (202) 566–0270.

Use EPA's electronic docket and comment system at *www.regulations.gov,* to submit or view public comments, access the index listing of the contents of the docket, and to access those documents in the docket that are available electronically. Once in the system, select ''docket search,'' then key in the docket ID number identified above. Please note that EPA's policy is that public comments, whether submitted electronically or in paper, will be made available for public viewing at *www.regulations.gov* as EPA receives them and without change, unless the comment contains copyrighted material, CBI, or other information whose public disclosure is restricted by statute. For further information about the electronic docket, go to *www.regulations.gov.*

Title: Part B Permit Application, Permit Modifications, and Special Permits (Renewal).

ICR numbers: EPA ICR No. 1573.11, OMB Control No. 2050–0009.

ICR status: This ICR is currently scheduled to expire on July 31, 2006. Under OMB regulations, the Agency may continue to conduct or sponsor the collection of information while this submission is pending at OMB. An Agency may not conduct or sponsor, and a person is not required to respond to, a collection of information, unless it displays a currently valid OMB control number. The OMB control numbers for EPA's regulations in title 40 of the CFR, after appearing in the **Federal Register** when approved, are listed in 40 CFR part 9, are displayed either by publication in the **Federal Register** or by other appropriate means, such as on the related collection instrument or form, if applicable. The display of OMB control numbers in certain EPA regulations is consolidated in 40 CFR part 9.

Abstract: Section 3005 of Subtitle C of RCRA requires treatment, storage or disposal facilities (TSDFs) to obtain a permit. To obtain the permit, the TSDFs must submit an application describing the facility's operation. There are two parts to the RCRA permit application—Part A and Part B. Part A defines the processes to be used for treatment, storage, and disposal of hazardous wastes; the design capacity of such processes; and the specific hazardous wastes to be handled at the facility. Part B requires detailed site specific information such as geologic, hydrologic, and engineering data. In the event that permit modifications are proposed by the applicant or EPA, modifications must conform to the requirements under sections 3004 and 3005.

Burden Statement: The annual public reporting and recordkeeping burden for this collection of information is estimated to average 262 hours per response. Burden means the total time, effort, or financial resources expended by persons to generate, maintain, retain, or disclose or provide information to or for a Federal agency. This includes the time needed to review instructions; develop, acquire, install, and utilize technology and systems for the purposes of collecting, validating, and verifying information, processing and maintaining information, and disclosing and providing information; adjust the existing ways to comply with any previously applicable instructions and requirements; train personnel to be able to respond to a collection of information; search data sources; complete and review the collection of information; and transmit or otherwise disclose the information.

Respondents/Affected Entities: Business or other for-profit.

Estimated Number of Respondents: 97.

Frequency of Response: On occasion.

Estimated Total Annual Hour Burden: 25,430.

Estimated Total Annual Cost: $7,518,000, which includes $45,000 annualized capital/startup costs, $5,658,000 annual O&M costs and $1,815,000 annual labor costs.

Changes in the Estimates: There is an increase of 13,221 hours in the total estimated burden currently identified in the OMB Inventory of Approved ICR Burdens. This increase is due to the larger number of affected facilities, based on the current information and reporting requirements from the RCRAInfo database.

Dated: July 12, 2006.

Sara Hisel McCoy,

Acting Director, Collection Strategies Division.

[FR Doc. E6–11526 Filed 7–19–06; 8:45 am]

BILLING CODE 6560–50–P

ENVIRONMENTAL PROTECTION AGENCY

[EPA–HQ–OAR–2002–0094; FRL–8200–6]

Agency Information Collection Activities; Submission to OMB for Review and Approval; Comment Request; Reporting Requirements Under EPA's Climate Leaders Partnership (Renewal); EPA ICR No. 2100.02, OMB Control No. 2060–0532

AGENCY: Environmental Protection Agency.

ACTION: Notice.

SUMMARY: In compliance with the Paperwork Reduction Act (PRA) (44 U.S.C. 3501 *et seq.*), this document announces that an Information Collection Request (ICR) has been forwarded to the Office of Management and Budget (OMB) for review and approval. This is a request to renew an existing approved collection. The ICR, which is abstracted below, describes the nature of the information collection and its estimated burden and cost.

DATES: Additional comments may be submitted on or before August 21, 2006.

ADDRESSES: Submit your comments, referencing Docket ID No. EPA–HQ–OAR–2002–0094, to (1) EPA online using *www.regulations.gov* (preferred method), by e-mail to *a-and-r-docket@epamail.epa.gov*, or by mail to: EPA Docket Center, Environmental Protection Agency, Air and Radiation Docket and Information Center, MC 6102T, 1200 Pennsylvania Avenue, NW., Washington, DC 20460, and (2) OMB by mail to: Office of Information and Regulatory Affairs, Office of Management and Budget (OMB), Attention: Desk Officer for EPA, 725 17th Street, NW., Washington, DC 20503.

FOR FURTHER INFORMATION CONTACT: James Sullivan, Climate Protection Partnerships Division, Office of Atmospheric Programs, 6202J, Environmental Protection Agency, 1200 Pennsylvania Avenue, NW., Washington, DC 20460; telephone number: (202) 343–9241; fax number: (202) 565–2134; e-mail address *sullivan.jamest@epa.gov*.

SUPPLEMENTARY INFORMATION: EPA has submitted the following ICR to OMB for review and approval according to the procedures prescribed in 5 CFR 1320.12. On June 1, 2006 (71 FR 31177), EPA sought comments on this ICR pursuant to 5 CFR 1320.8(d). EPA received no comments. Any additional comments on this ICR should be submitted to EPA and OMB within 30 days of this notice.

EPA has established a public docket for this ICR under Docket ID No. EPA–HQ–OAR–2002–0094, which is available for online viewing at *www.regulations.gov*, or in person viewing at the Air and Radiation Docket and Information Center in the EPA Docket Center (EPA/DC), EPA West Building, Room B102, 1301 Constitution Avenue, NW., Washington, DC. The EPA/DC Public Reading Room is open from 8 a.m. to 4:30 p.m., Monday through Friday, excluding legal holidays. The telephone number for the Reading Room is 202–566–1744, and the telephone number for the Air and Radiation Docket is 202–566–1742.

Use EPA's electronic docket and comment system at *www.regulations.gov*, to submit or view public comments, access the index listing of the contents of the docket, and to access those documents in the docket that are available electronically. Once in the system, select ''docket search,'' then key in the docket ID number identified above. Please note that EPA's policy is that public comments, whether submitted electronically or in paper, will be made available for public viewing at *www.regulations.gov* as EPA receives them and without change, unless the comment contains copyrighted material, CBI, or other information whose public disclosure is restricted by statute. For further information about the electronic docket, go to *www.regulations.gov*.

Title: Reporting Requirements Under EPA's Climate Leaders Partnership (Renewal).

ICR numbers: EPA ICR No. 2100.02, OMB Control No. 2060–0532.

ICR Status: This ICR is scheduled to expire on September 30, 2006. Under OMB regulations, the Agency may continue to conduct or sponsor the collection of information while this submission is pending at OMB. An Agency may not conduct or sponsor, and a person is not required to respond to, a collection of information, unless it displays a currently valid OMB control number. The OMB control numbers for EPA's regulations in title 40 of the CFR, after appearing in the **Federal Register** when approved, are listed in 40 CFR part 9, and included on the related collection instrument or form, if applicable.

Abstract: In an effort to aid implementation of U.S. commitments in the United Nations Framework Convention on Climate Change, the President announced a Climate Change Strategy on February 14, 2002, wherein he set a national U.S. GHG intensity goal of 18 percent by 2012. Part of that strategy challenges companies to set GHG reduction goals by working with EPA through the voluntary Climate Leaders program. EPA has developed this renewal ICR to ensure that the program remains credible by obtaining continued authorization to collect information from Climate Leaders Partners to ensure the Partners are meeting their GHG goals over time. Companies that join Climate Leaders voluntarily agree to the following: Completing and submitting a Partnership Agreement; negotiating a corporate GHG reduction goal; submitting a GHG inventory management plan; participating in an onsite review of the inventory management plan, and reporting to EPA, on an annual basis, the company's GHG emissions inventory, and progress toward their GHG reduction goal via Climate Leaders Annual GHG Inventory Summary and Goal Tracking Form. The information contained in the inventories of the companies that join Climate Leaders may be considered confidential business information and is maintained as such. EPA uses the data obtained from the companies to assess the success of the program in achieving its GHG reduction goals. Responses to the information collection are voluntary.

Burden Statement: The annual public reporting and recordkeeping burden for this collection of information is estimated to equal 11,955 hours and to average 94.13 hours per year per respondent. The average number of annual burden hours on first year partners for each type of one-time response is: 9.67 hours to complete and submit a Partnership Agreement, 46.75 hours for documenting and submitting an Inventory Management Plan, 22.25 hours participating in an on-site verification of the Inventory Management Plan, 41 hours for negotiating and setting a GHG reduction goal, 117.5 hours for establishing a base year inventory, and 3.5 hours to submit a company profile that is posted on the Web. For all other partners who have

been part of the program for longer than one year, the average number of annual burden hours is 67 hours for verifying and updating the Annual GHG Inventory Summary and Goal Tracking Form one time per year.

Partners may also submit voluntary updates of company profiles or contact information, via the Climate Leaders Web site or e-mail. These updates would take 3 hours per response. All of these activities are included in the annual burden estimate.

There are no capital or start-up costs associated with this information collection. The average annual operation and maintenance cost resulting for this collection of information is $3 per respondent. The average annual labor cost is $6,914 per respondent. The resulting total annual cost averaged over the three year period is $878,176.

Burden means the total time, effort, or financial resources expended by persons to generate, maintain, retain, or disclose or provide information to or for a Federal agency. This includes the time needed to review instructions; develop, acquire, install, and utilize technology and systems for the purposes of collecting, validating, and verifying information, processing and maintaining information, and disclosing and providing information; adjust the existing ways to comply with any previously applicable instructions and requirements which have subsequently changed; train personnel to be able to respond to a collection of information; search data sources; complete and review the collection of information; and transmit or otherwise disclose the information.

Respondents/Affected Entities: Climate Leaders Partner Corporations.

Estimated Number of Respondents: 127.

Frequency of Response: Annually, on occasion, one-time.

Estimated Total Annual Hour Burden: 11,955.

Estimated Total Annual Cost: $878,000, includes $0 annual capital/startup costs, $60 annual O&M costs and $878,000 annual labor costs.

Changes in the Estimates: There is an increase of 6,841 hours in the total estimated burden compared with that identified in the ICR currently approved by OMB. This increase includes an adjustment of 4,637 hours and a program change of 2,204 hours. This increase reflects an evolution of the Climate Leader Partnership which has modified the reporting and tracking procedures in order to continue to assess the program's effectiveness. EPA has collaborated with partners to develop these revised reporting requirements, which are better suited for establishing and tracking progress of corporate GHG reduction goals. This change is result of a more interactive program approach between EPA and Climate Leaders partners and a larger number of partners in the program since the currently approved ICR.

Dated: July 12, 2006.

Sara Hisel McCoy,

Acting Director, Collection Strategies Division.

[FR Doc. E6–11527 Filed 7–19–06; 8:45 am]

BILLING CODE 6560–50–P

ENVIRONMENTAL PROTECTION AGENCY

[EPA–HQ–OW–2006–0136; FRL–8200–8]

Agency Information Collection Activities; Submission to OMB for Review and Approval; Comment Request; Information Collection Request for the NPDES Regulation and Effluent Limitation Guidelines and Standards for Concentrated Animal Feeding Operations, EPA ICR No. 1989.04, OMB Control No. 2040–0250

AGENCY: Environmental Protection Agency.

ACTION: Notice.

SUMMARY: In compliance with the Paperwork Reduction Act (44 U.S.C. 3501 *et seq.*), this document announces that an Information Collection Request (ICR) has been forwarded to the Office of Management and Budget (OMB) for review and approval. This is a request to renew an existing approved collection. This ICR is scheduled to expire on July 31, 2006. Under OMB regulations, the Agency may continue to conduct or sponsor the collection of information while this submission is pending at OMB. This ICR describes the nature of the information collection and its estimated burden and cost.

DATES: Additional comments may be submitted on or before August 21, 2006.

ADDRESSES: Submit your comments, referencing docket ID number EPA–HQ–OW–2006–0136, to (1) EPA online using *www.regulations.gov* (our preferred method), by email to *ow-docket@epa.gov*, or by mail to: EPA Docket Center, Environmental Protection Agency, Water Docket, Mail Code 4101T, 1200 Pennsylvania Ave., NW., Washington, DC 20460, and (2) OMB at: Office of Information and Regulatory Affairs, Office of Management and Budget (OMB), Attention: Desk Officer for EPA, 725 17th Street, NW., Washington, DC 20503.

FOR FURTHER INFORMATION CONTACT: Nina Bonnelycke, Environmental Protection Agency, 1200 Pennsylvania Ave., NW., Washington, DC 20460; telephone number: 202.564.0764; fax number: 202.564.6384; e-mail address: *bonnelycke.nina@epa.gov.*

SUPPLEMENTARY INFORMATION: EPA has submitted the following ICR to OMB for review and approval according to the procedures prescribed in 5 CFR 1320.12. On March 7, 2006 (71 FR 11407–11411), EPA sought comments on this ICR pursuant to 5 CFR 1320.8(d). EPA received one set of comments on the draft ICR. EPA's response to those comments is reflected in the ICR supporting statement. Any additional comments on this ICR should be submitted to EPA and OMB within 30 days of this notice.

EPA has established a public docket for this ICR under Docket ID No. EPA–HQ–OW–2006–0136, which is available for online viewing at *www.regulations.gov*, or in person viewing at the Water Docket in the EPA Docket Center (EPA/DC), EPA West, Room B102, 1301 Constitution Ave., NW., Washington, DC. The EPA Docket Center Public Reading Room is open from 8:30 a.m. to 4:30 p.m., Monday through Friday, excluding legal holidays. The telephone number for the Reading Room is (202) 566–1744, and the telephone number for the Water Docket is (202) 566–2426.

Use EPA's electronic docket and comment system at *www.regulations.gov*, to submit or view public comments, access the index listing of the contents of the docket, and to access those comments in the docket that are available electronically. Once in the system, select ''docket search,'' then key in the docket ID number identified above. Please note that EPA's policy is that public comments, whether submitted electronically or in paper, will be made available for public viewing at *www.regulations.gov* as EPA receives them and without change, unless the comment contains copyrighted material, CBI, or other information whose public disclosure is restricted by statute. For further information about the electronic docket, go to *www.regulations.gov.*

Title: Information Collection Request for the NPDES Regulation and Effluent Limitation Guidelines and Standards for Concentrated Animal Feeding Operations.

ICR Numbers: EPA ICR No. 1989.04, OMB Control No. 2040–0250.

ICR Status: This ICR is scheduled to expire on July 31, 2006. Under OMB regulations, the Agency may continue to conduct or sponsor the collection of information while this submission is pending at OMB. An Agency may not conduct or sponsor, and a person is not required to respond to, a collection of information, unless it displays a currently valid OMB control number. The OMB control numbers for EPA's regulations in title 40 of the CFR, after appearing in the **Federal Register** when approved, are listed in 40 CFR part 9, are displayed either by publication in the **Federal Register** or by other appropriate means, such as on the related collection instrument or form, if applicable. The display of OMB control numbers in certain EPA regulations is consolidated in 40 CFR part 9.

Abstract: This ICR calculates the burden and costs associated with the NPDES and ELG regulations for Concentrated Animal Feeding Operations (CAFOs). These regulations regulate land application of manure, litter and wastewater generated at CAFO facilities. The rule requires all facilities defined as a CAFO to apply for a NPDES permit.

Burden Statement: The annual public reporting and recordkeeping burden for this collection of information is estimated to average less than 18 hours per response. Burden means the total time, effort, or financial resources expended by persons to generate, maintain, retain, or disclose or provide information to or for a Federal agency. This includes the time needed to review instructions; develop, acquire, install, and utilize technology and systems for the purposes of collecting, validating, and verifying information, processing and maintaining information, and disclosing and providing information; adjust the existing ways to comply with any previously applicable instructions and requirements which have subsequently changed; train personnel to be able to respond to a collection of information; search data sources; complete and review the collection of information; and transmit or otherwise disclose the information.

Respondents/Affected Entities: Entities potentially affected by this action are owners and operators of Concentrated Animal Feeding Operations (CAFOs).

Estimated Number of Respondents: 24,080

Frequency of Response: On occasion.

Estimated Total Annual Hour Burden: 3,500,000 hours.

Estimated Total Annual Cost: $78,660,000 includes $440,000 for capital investment and $8,680,000 for O&M costs.

Changes in the Estimates: The burden estimate has increased due to growth in the industry and trends towards consolidation into larger facilities. As a result calculations were revised to accommodate this.

Dated: July 12, 2006.

Sara Hisel McCoy,

Acting Director, Collection Strategies Division.

[FR Doc. E6–11528 Filed 7–19–06; 8:45 am]

BILLING CODE 6560–50–P

ENVIRONMENTAL PROTECTION AGENCY

[EPA–R01–OW–2006–0435; FRL–8200–3]

Massachusetts Marine Sanitation Device Standard—Notice of Determination

AGENCY: Environmental Protection Agency (EPA).

ACTION: Notice of Determination.

SUMMARY: The Regional Administrator of the Environmental Protection Agency—New England Region, has determined that adequate facilities for the safe and sanitary removal and treatment of sewage from all vessels are reasonably available for the waters of Plymouth Bay, Plymouth Harbor, Kingston Bay, and Duxbury Bay, Massachusetts; their respective coastal waters and coastal tidal rivers covered under this determination.

ADDRESSES: *Docket:* All documents in the docket are listed in the *www.regulations.gov* index. Although listed in the index, some information is not publicly available, e.g., CBI or other information whose disclosure is restricted by statute. Certain other material, such as copy-righted material, will be publicly available only in hard copy. Publicly available docket materials are available electronically in *www.regulations.gov*.

FOR FURTHER INFORMATION CONTACT: Ann Rodney, U. S. Environmental Protection Agency—New England Region, One Congress Street, Suite 1100, COP, Boston, MA 02114–2023. Telephone: (617) 918–0538. Fax number: (617) 918–1505. e-mail address: *Rodney.ann@epa.gov*.

SUPPLEMENTARY INFORMATION: This Notice of Determination is for the waters of Plymouth Bay, Plymouth Harbor, Kingston Bay, and Duxbury Bay, Massachusetts. The area of designation includes:

North to include the northernmost reaches of the Back River—42°04′06″ N–70°39′12″ W; West to Kingston—Route 3A bridge over the Jones River—41°59′48″ N–70°44′30″ W; South to Plymouth—Route 3A bridge over the Eel River and southernmost waters of Warren Cove—41°56′51″ N–70°37′55″ W; Duxbury municipal boundary—42°04′22″ N–70°38′55″ W; East to navigational marker N ''8'' located off Howland Ledge—42°04′36″ N–70°36′48″ W; South to navigational marker RW ''GP'' Bell located east of Gurnet Point—41°59′57″ N–70°35′03″ W; South to navigation Marker R ''12'' Whistle located off Mary Ann Rocks—41°55′07″ N–70°33′22″ W; South to navigation marker RW ''CC'' Bell located off the Cape Cod Canal—41°48′52″ N–70°27′38″ W; and West to Plymouth municipal boundary—41°48′38″ N–70°32′13″ W.

The delineation places the eastern boundary 9,900 feet seaward of Duxbury Beach at the public parking area; 4,775 feet seaward of Gurnet Point; 6,775 feet seaward of Manomet Point; and 15,000 feet seaward of Peaked Cliff.

On June 1, 2006, notice was published that the State of Massachusetts had petitioned the Regional Administrator, Environmental Protection Agency, to determine that adequate facilities for the safe and sanitary removal and treatment of sewage from all vessels are reasonably available for the waters of Plymouth Bay, Plymouth Harbor, Kingston Bay, and Duxbury Bay, Massachusetts and their respective coastal waters and coastal tidal rivers. No comments were received on this petition.

The petition was filed pursuant to section 312 (f) (3) of Public Law 92–500, as amended by Public laws 95–217 and 100–4, for the purpose of declaring these waters a ''No Discharge Area'' (NDA).

Section 312(f)(3) states: After the effective date of the initial standards and regulations promulgated under this section, if any State determines that the protection and enhancement of the quality of some or all of the waters within such States require greater environmental protection, such State may completely prohibit the discharge from all vessels of any sewage, whether treated or not, into such waters, except that no such prohibition shall apply until the Administrator determines that adequate facilities for the safe and sanitary removal and treatment of sewage from all vessels are reasonably available for such water to which such prohibition would apply.

The information submitted to EPA by the Commonwealth of Massachusetts certifies that there are six pumpout facilities at four locations located within the proposed area. A list of the facilities,

with phone numbers, locations, and hours of operation is appended at the end of this determination.

Based on the examination of the petition and its supporting documentation and information from site visits by EPA New England staff, EPA has determined that adequate facilities for the safe and sanitary removal and treatment of sewage from all vessels are reasonably available for the area covered under this determination.

This determination is made pursuant to section 312(f)(3) of Public Law 92–500, as amended by Public Laws 95–217 and 100–4.

LIST OF PUMPOUTS IN THE PROPOSED AREA

Name	Location	Contact information	Hours of operation (Call ahead to verify)	Mean low water depth (in feet)	Fee
Brewer's Marine	Plymouth Harbor	VHF 9, 72, 508–746–4500, *bpm@bby.com.*	April 1–Dec. 15 7 am–5 pm	9	None.
Plymouth Harbormaster Pumpout Boat.	Plymouth Harbor @ Town Pier.	VHF 9, 16, 508–830–4182	May 1–Nov. 1 Pumpout boat Daily 10 am–6 pm	N/A	None.
Plymouth Shore Side Pumpout at Town Pier.	Plymouth Harbor @ Town Pier.	VHF 9, 508–830–4182	May 1–Nov. 1 Self-Serve 24 hrs	8	None.
Duxbury Harbormaster Pumpout Boat.	Snug Harbor	VHF 16, 781–934–2866	May 1–Nov. 1 Spring 9 am–5 pm Summer 7 am–7 pm Fall 9 am–5 pm	N/A	None.
Duxbury Shore Side Pumpout.	Duxbury Town Pier	VHF 16, 781–934–2866	May 1–Nov. 1 Spring 9 am–5 pm Summer 7 am–7 pm Fall 9 am–5 pm	6	None.
Kingston Harbormaster	Town Landing	VHF 9, 781–585–0519	Apr. 1–Nov. 1 8 am–4 pm	3	None.

Dated: July 11, 2006.

Robert W. Varney,

Regional Administrator, New England Region.

[FR Doc. E6–11530 Filed 7–19–06; 8:45 am]

BILLING CODE 6560–50–P

ENVIRONMENTAL PROTECTION AGENCY

[FRL–8200–4]

Clean Water Act Section 303(d): Availability of Total Maximum Daily Loads (TMDL)

AGENCY: Environmental Protection Agency (EPA).

ACTION: Notice of availability.

SUMMARY: This notice announces the availability for comment of the administrative record files for 85 TMDLs and the calculations for these TMDLs prepared by EPA Region 6 for waters listed in the Red River, Sabine River, and Terrebonne Basins of Louisiana, under section 303(d) of the Clean Water Act (CWA). These TMDLs were completed in response to a court order in the lawsuit styled *Sierra Club, et al.* v. *Clifford, et al.*, No. 96–0527, (E.D. La.).

DATES: Comments must be submitted in writing to EPA on or before August 21, 2006.

ADDRESSES: Comments on the 85 TMDLs should be sent to Diane Smith, Environmental Protection Specialist, Water Quality Protection Division, U.S. Environmental Protection Agency Region 6, 1445 Ross Ave., Dallas, TX 75202–2733 or e-mail: *smith.diane@epa.gov.* For further information, contact Diane Smith at (214) 665–2145 or fax 214.665.7373. The administrative record files for the 85 TMDLs are available for public inspection at this address as well. Documents from the administrative record files may be viewed at *http://www.epa.gov/region6/water/tmdl.htm,* or obtained by calling or writing Ms. Smith at the above address. Please contact Ms. Smith to schedule an inspection.

FOR FURTHER INFORMATION CONTACT: Diane Smith at (214) 665–2145.

SUPPLEMENTARY INFORMATION: In 1996, two Louisiana environmental groups, the Sierra Club and Louisiana Environmental Action Network (plaintiffs), filed a lawsuit in Federal Court against the EPA, styled *Sierra Club, et al.* v. *Clifford, et al.*, No. 96–0527, (E.D. La.). Among other claims, plaintiffs alleged that EPA failed to establish Louisiana TMDLs in a timely manner. EPA proposes 63 of these TMDLs pursuant to a consent decree entered in this lawsuit.

EPA Seeks Comment on 85 TMDLs

By this notice EPA is seeking comment on the following 85 TMDLs for waters located within Louisiana basins:

Subsegment	Waterbody name	Pollutant
100306	Kelly Bayou—AR State Line to Black Bayou	Fecal Coliform.
100309	Cross Bayou	Turbidity, TDS, Chloride, Sulfate, and TSS.
100406	Flat River—Headwaters to Loggy Bayou	Fecal Coliform and TDS.
100602	Boggy Bayou	Turbidity and Sedimentation/siltation.
100603	Wallace Lake	Turbidity and Sedimentation/siltation.
100701	Black Lake Bayou	Turbidity, TDS, and Sedimentation/siltation.
100704	Kepler Creek	TDS.
100707	Castor Creek—Headwaters to Black Lake Bayou	Fecal Coliform.
100708	Unnamed Tributary to Castor Creek near Town of Castor	Sulfate and TDS.

Subsegment	Waterbody name	Pollutant
100709	Grand Bayou—Headwaters to Black Lake Bayou	Fecal Coliform.
100710	Unnamed Tributary to Grand Bayou near Town of Hall Summit	TDS, Chloride, and Sulfate.
100801	Saline Bayou—from its origin near Arcadia to LA Hwy 156 in Winn Parish (scenic)	Fecal Coliform.
100804	Unnamed Tributary to Saline Bayou near Town of Arcadia	TDS and Sulfate.
100901	Nantaches Creek—Headwaters to Nantaches Lake	Fecal Coliform.
101101	Cane River—above Natchitoches to Red River	TDS and Chloride.
101103	Bayou Kisatchie—entrance and into Kisatchie National Forest to Old River (scenic)	Fecal Coliform and TDS.
101301	Rigolette Bayou—Headwaters to Red River	Fecal Coliform.
101303	Latt Creek—Headwaters to Latt Lake	TDS.
101401	Buhlow Lake (Pineville)	Turbidity.
101503	Old Saline Bayou—from Saline Lake to Red River	Turbidity.
101505	Larto Lake	Turbidity, TDS, and Sulfate.
101601	Bayou Cocodrie—from Little Cross Bayou to Wild Cow Bayou (scenic)	Turbidity.
101602	Cocodrie Lake	Turbidity.
110202	Pearl Creek—from its origin to its entrance into Sabine River (scenic)	Fecal Coliform.
110401	Bayou Toro—Headwaters to LA Hwy 473	Fecal Coliform.
110402	Bayou Toro—LA Hwy 473 to its entrance into Sabine River	Fecal Coliform.
110501	West Anacoco Creek—Headwaters to Vernon Lake	Fecal Coliform.
110504	Bayou Anacoco—Vernon Lake to Anacoco Lake	Fecal Coliform.
110601	Vinton Waterway	Turbidity.
120101	Bayou Portage	TDS, Chloride, Fecal Coliform, and TSS.
120102	Bayou Poydras	Sediment, Sulfate, TDS, TSS, and Fecal Coliform.
120104	Bayou Grosse Tete	Fecal Coliform and TDS.
120105	Chamberlin Canal	Fecal Coliform, TSS, and Sediment.
120106	Bayou Plaquemine	Turbidity.
120109	Intracoastal Waterway	Fecal Coliform.
120110	Bayou Cholpe	TDS and Sulfate.
120111	Bayou Maringouin—Headwaters to East Atchafalaya Basin Levee	Fecal Coliform and TDS.
120112	Bayou Fordoche	Fecal Coliform and TDS.
120201	Lower Grand River and Belle River	Fecal Coliform and Sulfate.
120206	Grand Bayou and Little Grand Bayou	Fecal Coliform.
120301	Bayou Terrebonne	Fecal Coliform.
120502	Bayou Grand Caillou	Fecal Coliform.
120503	Bayou Petit Caillou	Fecal Coliform.
120504	Bayou Petit Caillou	Fecal Coliform.
120506	Bayou du Large	Fecal Coliform.
120507	Bayou Chauvin	Fecal Coliform.
120508	Houma Navigation Canal	Fecal Coliform.
120602	Bayou Terrebonne	Fecal Coliform.
120605	Bayou Pointe au Chien	Fecal Coliform.
120606	Bayou Blue	Fecal Coliform.
120701	Bayou Grand Caillou	Fecal Coliform.
120703	Bayou du Large	Fecal Coliform.
120707	Lake Boudreaux	Fecal Coliform.
120708	Lost Lake, Four League Bay	Fecal Coliform.

EPA requests that the public provide to EPA any water quality related data and information that may be relevant to the calculations for the 85 TMDLs. EPA will review all data and information submitted during the public comment period and revise the TMDLs where appropriate. EPA will then forward the TMDLs to the Louisiana Department of Environmental Quality (LDEQ). The LDEQ will incorporate the TMDLs into its current water quality management plan.

Dated: July 13, 2006.

Miguel I. Flores,

Director, Water Quality Protection Division (6WQ).

[FR Doc. E6–11529 Filed 7–19–06; 8:45 am]

BILLING CODE 6560–50–P

FEDERAL COMMUNICATIONS COMMISSION

Sunshine Act Meeting

July 13, 2006.

Deletion of Agenda Item From July 13, 2006, Open Meeting

The following item has been deleted from the list of Agenda items scheduled for consideration at the Thursday, July 13, 2006, Open Meeting and previously listed in the Commission's Notice of Thursday, July 6, 2006.

4	Media	*Title:* Digital Audio Broadcasting Systems and Their Impact on the Terrestrial Radio Broadcast Service. *Summary:* The Commission will consider a Second Report and Order, First Order on Reconsideration and Second Further Notice of Proposed Rulemaking regarding digital audio broadcasting (MM Docket No. 99–325).

Federal Communications Commission.

Marlene H. Dortch,

Secretary.

[FR Doc. 06–6400 Filed 7–18–06; 1:11 pm]

BILLING CODE 6712–01–P

FEDERAL RESERVE SYSTEM

Change in Bank Control Notices; Acquisition of Shares of Bank or Bank Holding Companies

The notificants listed below have applied under the Change in Bank Control Act (12 U.S.C. 1817(j)) and § 225.41 of the Board's Regulation Y (12 CFR 225.41) to acquire a bank or bank holding company. The factors that are considered in acting on the notices are set forth in paragraph 7 of the Act (12 U.S.C. 1817(j)(7)).

The notices are available for immediate inspection at the Federal Reserve Bank indicated. The notices also will be available for inspection at the office of the Board of Governors. Interested persons may express their views in writing to the Reserve Bank indicated for that notice or to the offices of the Board of Governors. Comments must be received not later than August 4, 2006.

A. Federal Reserve Bank of Atlanta (Andre Anderson, Vice President) 1000 Peachtree Street, N.E., Atlanta, Georgia 30309:

1. John L. Harvey, Flora, Mississippi; to retain voting shares of Madison Financial Corporation and thereby indirectly retain voting shares of Madison County Bank, both of Madison, Mississippi.

Board of Governors of the Federal Reserve System, July 17, 2006.

Robert deV. Frierson,

Deputy Secretary of the Board.

[FR Doc. E6–11517 Filed 7–19–06; 8:45 am]

BILLING CODE 6210–01–S

FEDERAL RESERVE SYSTEM

Notice of Proposals to Engage in Permissible Nonbanking Activities or to Acquire Companies that are Engaged in Permissible Nonbanking Activities

The companies listed in this notice have given notice under section 4 of the Bank Holding Company Act (12 U.S.C. 1843) (BHC Act) and Regulation Y (12 CFR part 225) to engage *de novo*, or to acquire or control voting securities or assets of a company, including the companies listed below, that engages either directly or through a subsidiary or other company, in a nonbanking activity that is listed in § 225.28 of Regulation Y (12 CFR 225.28) or that the Board has determined by Order to be closely related to banking and permissible for bank holding companies. Unless otherwise noted, these activities will be conducted throughout the United States.

Each notice is available for inspection at the Federal Reserve Bank indicated. The notice also will be available for inspection at the offices of the Board of Governors. Interested persons may express their views in writing on the question whether the proposal complies with the standards of section 4 of the BHC Act. Additional information on all bank holding companies may be obtained from the National Information Center Web site at *http://www.ffiec.gov/nic/*.

Unless otherwise noted, comments regarding the applications must be received at the Reserve Bank indicated or the offices of the Board of Governors not later than August 14, 2006.

A. Federal Reserve Bank of Cleveland (Cindy West, Manager) 1455 East Sixth Street, Cleveland, Ohio 44101-2566:

1. National City Corporation, Cleveland, Ohio; to acquire Harbor Florida Bancshares, Inc., Fort Pierce, Florida, and thereby indirectly acquire Harbor Federal Savings Bank, Fort Pierce, Florida, and engage in operating a savings association, pursuant to section 225.28(b)(4)(ii), and Appraisal Analysis, Inc., Fort Pierce, Florida, and engage in providing real estate appraisal services, pursuant to section 225.28(b)(2)(i) of Regulation Y.

Board of Governors of the Federal Reserve System, July 17, 2006.

Robert deV. Frierson,

Deputy Secretary of the Board.

[FR Doc. E6–11518 Filed 7–19–06; 8:45 am]

BILLING CODE 6210–01–S

DEPARTMENT OF HEALTH AND HUMAN SERVICES

Centers for Disease Control and Prevention

[30Day–06–0234]

Agency Forms Undergoing Paperwork Reduction Act Review

The Centers for Disease Control and Prevention (CDC) publishes a list of information collection requests under review by the Office of Management and Budget (OMB) in compliance with the Paperwork Reduction Act (44 U.S.C. Chapter 35). To request a copy of these requests, call the CDC Reports Clearance Officer at (404) 639–5960 or send an e-mail to *omb@cdc.gov*. Send written comments to CDC Desk Officer, Office of Management and Budget, Washington, DC or by fax to (202) 395–6974. Written comments should be received within 30 days of this notice.

Proposed Project

National Ambulatory Medical Care Survey (NAMCS) 2007–2008 (OMB No. 0920–0234)—Revision—National Center for Health Statistics (NCHS), Centers for Disease Control and Prevention (CDC).

Background and Brief Description

The National Ambulatory Medical Care Survey (NAMCS) was conducted annually from 1973 to 1981, again in 1985, and resumed as an annual survey in 1989. The purpose of NAMCS is to meet the needs and demands for statistical information about the provision of ambulatory medical care services in the United States. Ambulatory services are rendered in a wide variety of settings, including physicians' offices and hospital outpatient and emergency departments. The NAMCS target population consists of all office visits made by ambulatory patients to non-Federal office-based physicians (excluding those in the specialties of anesthesiology, radiology, and pathology) who are engaged in direct patient care. For the first time in 2006, physicians and mid-level providers (i.e., nurse practitioners, physician assistants, and nurse midwives) practicing in community health centers (CHCs) were added to the NAMCS sample, and these data will continue to be collected in 2007–2008. To complement NAMCS data, NCHS initiated the National Hospital Ambulatory Medical Care Survey (NHAMCS, OMB No. 0920–0278) to provide data concerning patient visits to hospital outpatient and emergency departments.

The NAMCS provides a range of baseline data on the characteristics of the users and providers of ambulatory medical care. Data collected include the patients' demographic characteristics, reason(s) for visit, physicians' diagnosis(es), diagnostic services, medications, and visit disposition. In addition, a Cervical Cancer Screening Supplement (CCSS) will continue to be a key focus in 2007–2008. The CCSS collects information on cervical cancer screening practices performed by selected physician specialties. It will allow the CDC/National Center for Chronic Disease Prevention and Health Promotion to evaluate cervical cancer screening methods and the use of human papillomavirus tests.

Users of NAMCS data include, but are not limited to, congressional offices,

Federal agencies, state and local governments, schools of public health, colleges and universities, private industry, nonprofit foundations, professional associations, clinicians, researchers, administrators, and health planners. There are no costs to the respondents other than their time. The total estimated annualized burden hours are 8,645.

ESTIMATED ANNUALIZED BURDEN HOURS

Respondents	Number of respondents	Number of responses/respondent	Avg. burden per response (in hrs)
Office-based physicians (eligible):			
Physician Induction Interview	2,662	1	35/60
Patient Record form	2,263	30	5/60
Pulling and re-filing Patient Record form	399	30	1/60
CCSS	712	1	15/60
Office-based physicians (ineligible):			
Patient Induction Interview	888	1	5/60
Community Health Center Directors:			
Community Health Center Induction Interview	104	1	20/60
CHC Providers:			
Physician Induction Interview	312	1	35/60
Patient Record Form	265	30	5/60
Pulling and re-filing Patient Record form	47	30	1/60
CCSS	312	1	15/60

Dated: July 11, 2006.

Joan F. Karr,

Acting Reports Clearance Officer, Centers for Disease Control and Prevention.

[FR Doc. E6–11521 Filed 7–19–06; 8:45 am]

BILLING CODE 4163–18–P

DEPARTMENT OF HEALTH AND HUMAN SERVICES

Food and Drug Administration

Psychopharmacologic Drugs Advisory Committee; Notice of Meeting

AGENCY: Food and Drug Administration, HHS.

ACTION: Notice.

This notice announces a forthcoming meeting of a public advisory committee of the Food and Drug Administration (FDA). The meeting will be open to the public.

Name of Committee: Psychopharmacologic Drugs Advisory Committee.

General Function of the Committee: To provide advice and recommendations to the agency on FDA's regulatory issues.

Date and Time: The meeting will be held on September 7 and 8, 2006, from 8 a.m. to 5 p.m.

Location: Hilton Hotel,The Ballrooms, 620 Perry Pkwy., Gaithersburg, MD 20877.

Contact Person: Cicely Reese, Center for Drug Evaluation and Research (HFD–21), Food and Drug Administration, 5600 Fishers Lane (for express delivery, 5630 Fishers Lane, rm. 1093) Rockville, MD 20857, 301–827–7001, FAX: 301–827–6776, e-mail: *Cicely.Reese@fda.hhs.gov*, or FDA Advisory Committee Information Line, 1–800–741–8138 (301–443–0572 in the Washington, DC area), code 3014512544. Please call the Information Line for up-to-date information on this meeting. The background material will become available no later than the day before the meeting and will be posted on FDA's Web site at *http://www.fda.gov/ohrms/dockets/ac/acmenu.htm* under the heading ''Psychopharmacologic Drugs Advisory Committee (PDAC).'' (Click on the year 2006 and scroll down to PDAC meetings.)

Agenda: On September 7, 2006, the committee will discuss new drug application (NDA) 21–999, paliperidone extended-release (ER) tablets, Janssen, L.P./Johnson & Johnson Pharmaceutical Research and Development, L.L.C., proposed indication for treatment of schizophrenia. On September 8, 2006, the committee will discuss NDA 21–992, desvenlafaxine succinate (DVS 233), ER tablets, Wyeth Pharmaceuticals, proposed indication for treatment of major depressive disorder.

Procedure: Interested persons may present data, information, or views, orally or in writing, on issues pending before the committee. Written submissions may be made to the contact person on or before August 23, 2006. Oral presentations from the public will be scheduled between approximately 1 p.m. and 2 p.m. on both days. Time allotted for each presentation may be limited. Those desiring to make formal oral presentations should notify the contact person and submit a brief statement of the general nature of the evidence or arguments they wish to present, the names and addresses of proposed participants, and an indication of the approximate time requested to make their presentation on or before August 23, 2006.

Persons attending FDA's advisory committee meetings are advised that the agency is not responsible for providing access to electrical outlets.

FDA welcomes the attendance of the public at its advisory committee meetings and will make every effort to accommodate persons with physical disabilities or special needs. If you require special accommodations due to a disability, please contact Cicely Reese at least 7 days in advance of the meeting.

Notice of this meeting is given under the Federal Advisory Committee Act (5 U.S.C. app. 2).

Dated: July 13, 2006.

Randall W. Lutter,

Associate Commissioner for Policy and Planning.

[FR Doc. E6–11537 Filed 7–19–06; 8:45 am]

BILLING CODE 4160–01–S

DEPARTMENT OF HEALTH AND HUMAN SERVICES

Food and Drug Administration

Advisory Committee for Reproductive Health Drugs; Notice of Meeting

AGENCY: Food and Drug Administration, HHS.

ACTION: Notice.

This notice announces a forthcoming meeting of a public advisory committee of the Food and Drug Administration (FDA). The meeting will be open to the public.

Name of Committee: Advisory Committee for Reproductive Health Drugs.

General Function of the Committee: To provide advice and recommendations to the agency on FDA's regulatory issues.

Date and Time: The meeting will be held on August 29, 2006, from 8 a.m. to 5:30 p.m.

Location: Hilton Hotel, The Ballrooms, 620 Perry Pkwy., Gaithersburg, MD.

Contact Person: Teresa Watkins, Center for Drug Evaluation and Research (HFD–21), Food and Drug Administration, 5600 Fishers Lane (for express delivery, 5630 Fishers Lane, rm. 1093), Rockville, MD 20857, 301–827–7001, FAX: 301–827–6776, e-mail: *Teresa.Watkins@fda.hhs.gov* or FDA Advisory Committee Information Line, 1–800–741–8138 (301–443–0572 in the Washington, DC area), code 3014512537. Please call the Information Line for up-to-date information on this meeting. When available, background materials for this meeting will be posted 1 business day prior to the meeting on the FDA Website at *http://www.fda.gov/ohrms/dockets/ac/acmenu.htm*. Click on the year 2006 and scroll down to the Advisory Committee for Reproductive Health Drugs.)

Agenda: The committee will discuss new drug application (NDA) 21–945, proposed trade name Gestiva, 17 alpha-hydroxyprogesterone caproate injection, 250 mg/mL, Adeza Biomedical, for the proposed indication prevention of preterm delivery in women with a history of a prior preterm delivery.

Procedure: Interested persons may present data, information, or views, orally or in writing, on issues pending before the committee. Written submissions may be made to the contact person on or before August 15, 2006. Oral presentations from the public will be scheduled between approximately 1 p.m. and 2 p.m. Time allotted for each presentation may be limited. Those desiring to make formal oral presentations should notify the contact person and submit a brief statement of the general nature of the evidence or arguments they wish to present, the names and addresses of proposed participants, and an indication of the approximate time requested to make their presentation on or before August 15, 2006.

Persons attending FDA's advisory committee meetings are advised that the agency is not responsible for providing access to electrical outlets.

FDA welcomes the attendance of the public at its advisory committee meetings and will make every effort to accommodate persons with physical disabilities or special needs. If you require special accommodations due to a disability, please contact Teresa Watkins at least 7 days in advance of the meeting.

Notice of this meeting is given under the Federal Advisory Committee Act (5 U.S.C. app. 2).

Dated: July 13, 2006.

Randall W. Lutter,

Associate Commissioner for Policy and Planning.

[FR Doc. E6–11538 Filed 7–19–06; 8:45 am]

BILLING CODE 4160–01–S

DEPARTMENT OF HEALTH AND HUMAN SERVICES

Food and Drug Administration

[Docket No. 2006D–0246]

Draft Manufactured Food Regulatory Program Standards; Availability

AGENCY: Food and Drug Administration, HHS.

ACTION: Notice.

SUMMARY: The Food and Drug Administration (FDA) is announcing the availability of a draft document entitled ''Manufactured Food Regulatory Program Standards'' (draft program standards). The draft program standards, which establish a uniform foundation for the design and management of State programs responsible for regulation of plants that manufacture, process, pack, or hold foods in the United States, are being distributed for comment purposes only. This document is neither final nor is it intended for implementation at this time.

DATES: Written comments on the draft program standards may be submitted by September 18, 2006. General comments on the draft program standards are welcome at any time. Submit written comments on the information collection provisions by September 18, 2006.

ADDRESSES: Submit written comments on the information collection provisions to the Division of Dockets Management (HFA–305), Food and Drug Administration, 5630 Fishers Lane, rm. 1061, Rockville, MD 20852. Submit electronic comments to *http://www.fda.gov/dockets/ecomments*. Identify comments with the docket number found in brackets in the heading of this document.

Submit written requests for single copies of the draft program standards to the Division of Federal-State Relations (HFC–150), Office of Regional Operations, Food and Drug Administration, 5600 Fishers Lane, Rockville, MD 20857. Send one self-addressed adhesive label to assist the office in processing your request, or fax your request to 716–551–3845. See the **SUPPLEMENTARY INFORMATION** section for electronic access to the draft program standards.

FOR FURTHER INFORMATION CONTACT: Beverly Kent, Division of Federal-State Relations, Food and Drug Administration, 300 Pearl St., suite 100, Buffalo, NY 14202, 716–541–0331.

SUPPLEMENTARY INFORMATION:

I. Background

FDA is announcing the availability of a draft document entitled ''Manufactured Food Regulatory Program Standards.'' The standards were developed after the Department of Health and Human Services, Office of Inspector General (OIG) audited FDA's oversight of food firm inspections conducted by States through contracts. In June 2000, the OIG released its findings. The OIG recommended that FDA take steps to promote ''equivalence among Federal and State food safety standards, inspection programs, and enforcement practices.'' The report is on the Internet at *http://www.oig.hhs.gov/oei/reports/oei-01-98-00400.pdf*. (FDA has verified the Web site address, but FDA is not responsible for any subsequent changes to the Web site after this document publishes in the **Federal Register**.)

In response to the OIG's findings, FDA established a committee to draft a set of quality standards for manufactured food regulatory programs. The committee was comprised of officials from FDA and from State agencies responsible for the regulation and inspection of food plants.

These draft program standards establish a uniform foundation for the design and management of a State program that is an operational unit(s) responsible for the regulatory oversight of food plants that manufacture, process, pack, or hold foods in the United States. The elements of the draft program standards describe best practices of a high-quality regulatory program. Achieving conformance with these program standards will require comprehensive self-assessment on the part of a State program and will encourage continuous improvement and innovation. All self-assessment

worksheets and supporting documents will be retained by the State agency.

II. Significance of Program Standards

These draft program standards represents the agency's current thinking on how to build a uniform foundation for managing a State program that is an operational unit(s) responsible for the regulatory oversight of food plants that manufacture, process, pack, or hold foods in the United States. The elements of the draft program standards describe best practices of a high-quality regulatory program.

III. Electronic Access

Persons with access to the Internet may obtain the draft program standards at either *http://www.fda.gov/ora/fed_state/default.htm* or *http://www.fda.gov.ohrms/dockets/default.htm*.

IV. Paperwork Reduction Act of 1995

Under the Paperwork Reduction Act of 1995 (the PRA) (44 U.S.C. 3501–3520), Federal agencies must obtain approval from the Office of Management and Budget (OMB) for each collection of information they conduct or sponsor. ''Collection of information'' is defined in 44 U.S.C. 3502(3) and 5 CFR 1320.3 and includes agency requests or requirements that members of the public submit reports, keep records, or provide information to a third party. Section 3506(c)(2)(A) of the PRA (44 U.S.C. 3506(c)(2)(A)) requires Federal agencies to provide a 60-day notice in the **Federal Register** concerning each proposed collection of information before submitting the collection of OMB for approval. To comply with this requirement, FDA is publishing notice of the proposed collection of information set forth in this document.

With respect to the following collection of information, FDA invites comments on the following topics: (1) Whether the proposed collection of information is necessary for the proper performance of FDA's functions, including whether the information will have practical utility; (2) the accuracy of FDA's estimate of the burden of the proposed collection of information, including the validity of the methodology and assumptions used; (3) ways to enhance the quality, utility, and clarity of the information to be collected; and (4) ways to minimize the burden of the collection of information on respondents, including through the use of automated collection techniques, when appropriate, and other forms of information technology.

Title: Manufactured Food Regulatory Program Standards

Description: The elements of the draft program standards are intended to ensure that the States have the best practices of a high-quality regulatory program to use for self-assessment and continuous improvement and innovation. The ten standards describe the critical elements of a regulatory program designed to protect the public from foodborne illness and injury. These elements include the State program's regulatory foundation, staff training, inspection, quality assurance, food defense preparedness and response, foodborne illness and incident investigation, enforcement, education and outreach, resource management, laboratory resources, and program assessment. Each standard has corresponding self-assessment worksheets, and certain standards have supplemental worksheets and forms that will assist State programs in determining their level of conformance with the standard. The State program is not required to use the forms and worksheets contained herein; however, alternate forms should be equivalent to the forms and worksheets in the draft program standards. These draft program standards do not address the performance appraisal processes that a State agency may use to evaluate individual employee performance. When finalized, FDA will use the program standards as a tool to improve contracts with State agencies. The program standards will assist both FDA and the States in fulfilling their regulatory obligations.

The implementation of the program standards will be negotiated as an option for payment under the State contract. States that are awarded this option will receive up to $5,000 to perform the self assessment and to maintain an operational plan for self improvement. FDA recognizes that full use and implementation of the program standards by those States will take several years. Such States will, however, be expected to implement improvement plans to demonstrate that their programs are moving toward full implementation. Those self assessments and improvement plans will be audited as a part of the program oversight of the FDA state contracts.

The goal is to enhance food safety by establishing a uniform basis for measuring and improving the performance of manufactured food regulatory programs in the United States. The development and implementation of these program standards will help Federal and State programs better direct their regulatory activities at reducing foodborne illness hazards in plants that manufacture, process, pack, or hold foods. Consequently, the safety and security of the food supply in the United States will improve.

TABLE 1.—ESTIMATED ANNUAL REPORTING BURDEN[1]

No. of Respondents	Annual Frequency per Response	Total Annual Responses	Hours per Response	Total Hours
40	0.5	20	40	800

[1] Because State agencies already keep records of the usual and customary activities required by their inspection programs, the burden from compiling these records is not included in the burden chart.

TABLE 2.—ESTIMATED 5-YEAR SELF ASSESSMENT BURDEN

No. of Respondents	5-Year Frequency per Response	Total 5-Year Responses	Hours per Response[1]	Total Hours[1]
40	1	40	100/40	4,000/1,600

[1] The initial self assessment is estimated at 100 hours per respondent. Subsequent updates of the self assessments will be conducted every 5 years and should be completed in 40 hours or less.

TABLE 3.—ESTIMATED ANNUAL "IMPROVEMENT PLAN" BURDEN

No. of Respondents	Annual Frequency per Response	Total Annual Responses	Hours per Response	Total Hours
40	1	40	5	200

V. Comments

The draft program standards are being distributed for comment purposes only and are not intended for implementation at this time. Interested persons may submit to the Division of Dockets Management (see **ADDRESSES**) written or electronic comments regarding this document. Submit a single copy of electronic comments or two paper copies of any mailed comments, except that individuals may submit one paper copy. Comments are to be identified with the docket number found in brackets in the heading of this document. A copy of the draft program standards and received comments are available for public examination in the Division of Dockets Management between 9 a.m. and 4 p.m. Monday through Friday.

Dated: July 14, 2006.

Jeffrey Shuren,

Assistant Commissioner for Policy.

[FR Doc. E6–11539 Filed 7–19–06; 8:45 am]

BILLING CODE 4160–01–S

DEPARTMENT OF HEALTH AND HUMAN SERVICES

Health Resources and Service Administration

Advisory Committee on Interdisciplinary, Community-Based Linkages; Notice of Meeting

In accordance with section 10(a)(2) of the Federal Advisory Committee Act (Pub. L. 92–463), notice is hereby given of the following meeting:

Name: Advisory Committee on Interdisciplinary, Community-Based Linkages (ACICBL).

Dates and Times: (Face-to-face meeting). July 24, 2006, 8:30 a.m. to 5 p.m. July 25, 2006, 8:30 a.m. to 3 p.m.

Place: Doubletree Hotel, 1750 Rockville Pike, Rockville, MD 20852, Telephone: 301–468–1100.

Status: The meeting will be open to the public.

Purpose: The Committee will be focusing on interdisciplinary training and education, specifically examining evidence-based models/research as regards interdisciplinary training. In addition, the Committee will be looking at the potential impact of interdisciplinary training programs on health service delivery networks including how such training programs address the needs of various underserved populations. Included in the meeting will be discussions of community-based training initiatives. The meeting will allow the Committee to formulate appropriate recommendations for the Secretary and Congress regarding interdisciplinary training, and community-based training.

Agenda: The agenda includes an overview of the Committee's general business activities. The Committee will hear presentations from experts on interdisciplinary training and community-based training, and will discuss best practices to formulate recommendations for the Secretary and the Congress.

Agenda items are subject to change as priorities indicate.

Supplementary Information: This meeting notice is delayed due to the resolution of fiscal year 2006 budget issues and the status of Committee membership.

For Further Information Contact: Anyone requesting information regarding the Committee should contact Lou Coccodrilli, Federal Official for the ACICBL, and Acting Director of the Division of State, Community & Public Health, Bureau of Health Professions, Health Resources and Services Administration, 5600 Fishers Lane, Maryland 20857; Telephone (301) 443–7774.

Dated: July 17, 2006.

Cheryl R. Dammons,

Director, Division of Policy Review and Coordination.

[FR Doc. 06–6382 Filed 7–17–06; 3:39 pm]

BILLING CODE 4165–15–P

DEPARTMENT OF HEALTH AND HUMAN SERVICES

National Institutes of Health

National Institute of Environmental Health Sciences; Division of Extramural Research and Training; Submission for OMB Review; Comment Request; Hazardous Waste Worker Training

Summary: Under the provisions of section 3507(a)(1)(D) of the Paperwork Reduction Act of 1995, the National Institute of Environmental Health Sciences (NIEHS), the National Institutes of Health (NIH) has submitted to the Office of Management and Budget (OMB) a request to review and approve the information collection listed below. This proposed information collection was previously published in the **Federal Register** on April 5, 2006, page 17119, and allowed 60 days for public comment. No public comments were received. The purpose of this notice is to allow an additional 30 days for public comment. The National Institutes of Health may not conduct or sponsor, and the respondent is not required to respond to, an information collection that has been extended, revised, or implemented on or after October 1, 1995, unless it displays a currently valid OMB control number.

Proposed Collection: Title: Hazardous Waste Worker Training—42 CFR Part 65. *Type of Information Collection Request:* Revision of OMB No. 0925–0348, expiration date August 31, 2006. *Need and Use of Information Collection:* This request for OMB review and approval of the information collection is required by regulation 42 CFR part 65(a)(6). The National Institute of Environmental Health Sciences (NIEHS) has been given major responsibility for initiating a worker safety and health training program under section 126 of the Superfund Amendments and Reauthorization Act of 1986 (SARA) for hazardous waste workers and emergency responders. A network of non-profit organizations that are committed to protecting workers and their communities by delivering high-quality, peer-reviewed safety and health curricula to target populations of hazardous waste workers and emergency responders has been developed. In seventeen years (FY 1987–2004), the NIEHS Worker Training program has successfully supported 20 primary grantees that have trained more than 1.3 million workers across the country and presented over 69,000 classroom and hands-on training courses, which have accounted for nearly 18 million contact hours of actual training. Generally, the grant will initially be for one year, and subsequent continuation awards are also for one year at a time. Grantees must submit a separate application to have the support continued for each subsequent year. Grantees are to provide information in accordance with S65.4(a), (b), (c) and 65.6(b) on the nature, duration, and purpose of the training, selection criteria for trainees' qualifications and competency of the project director and staff, cooperative agreements in the case of joint applications, the adequacy of training plans and resources, including budget and curriculum, and response to

meeting training criteria in OSHA's Hazardous Waste Operations and Emergency Response Regulations (29 CFR 1910.120). As a cooperative agreement, there are additional requirements for the progress report section of the application. Grantees are to provide their information in hard copy as well as enter information into the WETP Grantee Data Management System. The information collected is used by the Director through officers, employees, experts, and consultants to evaluate applications based on technical merit to determine whether to make awards. *Frequency of Response:* Biannual. *Affected Public:* Non-profit organizations. *Type of Respondents:* Grantees. The annual reporting burden is as follows: *Estimated Number of Respondents:* 18; *Estimated Number of Responses per Respondent:* 2; *Average Burden Hours per Response:* 10; and *Estimated Total Annual Burden Hours Requested:* 360. The annualized cost to respondents is estimated at: $10,764. There are no Capital Costs, Operating Costs and/or Maintenance Costs to report.

Request for Comments: Written comments and/or suggestions from the public and affected agencies are invited on one or more of the following points: (1) Whether the proposed collection of information is necessary for the proper performance of the function of the agency, including whether the information will have practical utility; (2) The accuracy of the agency's estimate of the burden of the proposed collection of information, including the validity of the methodology and assumption use; (3) Ways to enhance the quality, utility and clarity of the information to be collected; and (4) Ways to minimize the burden of the collection of information on those who are to respond, including the use of appropriate automated, electronic, mechanical, or other technological collection techniques or other forms of information technology.

Direct Comments to OMB: Written comments and/or suggestions regarding the item(s) contained in this notice, especially regarding the estimated public burden and associated response time, should be directed to the: Office of Management and Budget, Office of Regulatory Affairs, New Executive Office Building, Room 10235, Washington, DC 20503, Attention: Desk Officer for NIH. To request more information on the proposed project or to obtain a copy of the data collection plans and instruments, contact: Joseph T. Hughes, Jr., Director, Worker Education and Training Program, Division of Extramural Research and Training, NIEHS, P.O. Box 12333, Research Triangle Park, NC 27709 or call non-toll-free number (919) 541–0217 or E-mail your request, including your address to *wetp@niehs.nih.gov.*

Comments Due Date: Comments regarding this information collection are best assured of having their full effect if received within 30 days of the date of this publication.

Dated: July 12, 2006.

Richard A. Freed,

Associate Director for Management.

[FR Doc. 06–6371 Filed 7–19–06; 8:45 am]

BILLING CODE 4140–01–M

DEPARTMENT OF HEALTH AND HUMAN SERVICES

National Institutes of Health

Submission for OMB Review; Comment Request; CERTAS: A Researcher Configurable Self-Monitoring System

SUMMARY: Under the provisions of Section 3507(a)(1)(D) of the Paperwork Reduction Act of 1995, the National Cancer Institute, the National Institutes of Health has submitted to the Office of Management and Budget (OMB) a request to review and approve the information collection listed below. This proposed information collection was previously published in the **Federal Register** on April 27, 2006 page 26381 and allowed 60 days for public comment. No public comments were received. The purpose of this notice is to allow an additional 30 days for public comment.

Proposed Collection

Title: CERTAS: A Researcher Configurable Self-Monitoring System.

Type of Information Collection Request: NEW.

Need and Use of Information Collection: This study seeks to further our understanding of the usefulness and potential advantages of electronic self-monitoring of behavior-specifically diet and exercise behaviors associated with reduction of cancer risks. Logs, diaries, checklists and other self-monitoring tools are a ubiquitous part of nearly all cancer control research. The primary objective of this study trial is to compare paper-based self-monitoring to CERTAS self-monitoring devices (wireless sync and local sync) in a range of cancer risk behaviors. The findings will provide valuable information regarding: (1) A comparison of the real time recording compliance of these methods, (2) the pre-post effects of each type of recording (paper versus electronic), and (3) the relative cost per valid recorded entry for the two methods.

Frequency of Response: Daily.

Affected Public: Individuals.

Type of Respondents: Males and females 18 years of age or older who are: (1) Interested in improving their diet and exercise behaviors as they relate to cancer prevention, (2) proficient in utilizing a computer, and (3) generally healthy with no medical conditions which would require a special diet or preclude regular exercise.

The annual reporting burden is as follows:

Estimated Number of Respondents: 200;

Estimated Number of Responses per Respondent: 3;

Average Burden Hours per Response: 1.9;

Estimated Total Annual Burden Hours Requested: 1,148;

Estimated Annualized Cost to Respondents: $18,368.00.

There are no Capital Costs, Operating Costs, and/or Maintenance Costs to report.

ESTIMATE HOURS OF BURDEN

Type of respondents	Number of respondents	Frequency of response	Average time per response	Annual hour burden
Male	80	3	1.9134	459.264
Female	120	3	1.9134	688.896
Total	200			1148.16

Request for Comments: Written comments and /or suggestions from the public and affected agencies are invited on one or more of the following points:(1) Whether the proposed collection of information is necessary for the proper performance of the function of the agency, including whether the information will have practical utility; (2) The accuracy of the agency's estimate of the burden of the proposed collection of information, including the validity of the methodology and assumptions used; (3) Ways to enhance the quality, utility, and clarity of the information to be collected; and (4) Ways to minimize the burden of the collection of information on those who are to respond, including the use of appropriate automated, electric, mechanical, or other technological collection techniques or other forms of information technology.

Direct Comments to OMB: Written comments and/or suggestions regarding the item(s) contained in this notice, especially regarding the estimated public burden and associated response time, should be directed to the: Office of Management and Budget, Office of Regulatory Affairs, New Executive Office Building, Room 10235, Washington, DC 20503, Attention: Desk Officer for NIH. To request more information on the proposal project or to obtain a copy of the data collection plans and instruments, contact Dr. Jami Obermayer, Principal Investigator, PICS, Inc., 12007 Sunrise Valley Drive, Suite 480, Reston, Virginia 20191 at 703–758–1798 or e-mail your request, including your address to: *jobermayer@lifesign.com.*

Comments Due Date: Comments regarding this information collection are best assured of having their full effect is received within 30 days of the date of this publication.

Dated: July 12, 2006.

Rachelle Ragland-Greene,

NCI Project Clearance Liaison, National Institutes of Health.

[FR Doc. E6–11559 Filed 7–19–06; 8:45 am]

BILLING CODE 4101–01–P

DEPARTMENT OF HEALTH AND HUMAN SERVICES

National Institutes of Health

National Institute of Allergy and Infectious Diseases; Notice of Closed Meetings

Pursuant to section 10(d) of the Federal Advisory Committee Act, as amended (5 U.S.C. Appendix 2), notice is hereby given of the following meetings.

The meetings will be closed to the public in accordance with the provisions set forth in sections 552b(c)(4) and 552b(c)(6), Title 5 U.S.C., as amended. The grant applications and the discussions could disclose confidential trade secrets or commercial property such as patentable material, and personal information concerning individuals associated with the grant applications, the disclosure of which would constitute a clearly unwarranted invasion of personal privacy.

Name of Committee: National Institute of Allergy and Infectious Diseases Special Emphasis Panel, Tuberculosis Research Unit (TBRU).

Date: August 10, 2006.

Time: 8 a.m. to 5 p.m.

Agenda: To review and evaluate contract proposals.

Place: Courtyard Gaithersburg Washingtonian Center, 204 Boardwalk Place, Gaithersburg, MD 20878.

Contact Person: Darren D. Sledjeski, PhD, Scientific Review Administrator, NIAID, DEA, Scientific Review Program, Room 3253, 6700B Rockledge Drive, MSC–7616, Bethesda, MD 20892–7616. 301–451–2638. *sledjeskid@niaid.nih.gov.*

Name of Committee: National Institute of Allergy and Infectious Diseases Special Emphasis Panel, Unsolicited K99 Review.

Date: August 11, 2006.

Time: 12 p.m. to 2:30 p.m.

Agenda: To review and evaluate grant applications.

Place: National Institutes of Health, Rockledge 6700, 6700B Rockledge Drive, Bethesda, MD 20817 (Telephone Conference Call).

Contact Person: Mercy R. Prabhudas, PhD, Scientific Review Administrator, Scientific Review Program, Division of Extramural Activities, NIAID/NIH/DHHS, 6700B Rockledge Drive, MSC 7616, Bethesda, MD 20892–7616. 301–451–2615. *mp457n@nih.gov.*

Name of Committee: National Institute of Allergy and Infectious Diseases Special Emphasis Panel, HIV Anti-Viral Drug Discovery P01.

Date: August 17, 2006.

Time: 9 a.m. to 12 p.m.

Agenda: To review and evaluate grant applications.

Place: National Institutes of Health, Rockledge 6700, 6700B Rockledge Drive, Bethesda, MD 20817 (Telephone Conference Call).

Contact Person: Clayton C. Huntley, PhD, Scientific Review Administrator, Scientific Review Program, Division of Extramural Activities, National Institutes of Health/NIAID, 6700B Rockledge Drive, MSC 7616, Bethesda, MD 20892–7616. 301–451–2570. *chuntley@niaid.nih.gov.*

(Catalogue of Federal Domestic Assistance Program Nos. 93.855, Allergy, Immunology, and Transplantation Research; 93.856, Microbiology and Infectious Diseases Research, National Institutes of Health, HHS)

Dated: July 14, 2006.

Anna Snouffer,

Acting Director, Office of Federal Advisory Committee Policy.

[FR Doc. 06–6372 Filed 7–19–06; 8:45 am]

BILLING CODE 4140–01–M

DEPARTMENT OF HEALTH AND HUMAN SERVICES

National Institutes of Health

National Institute of Neurological Disorders and Stroke; Notice of Closed Meetings

Pursuant to section 10(d) of the Federal Advisory Committee Act, as amended (5 U.S.C. Appendix 2), notice is hereby given of the following meetings.

The meetings will be closed to the public in accordance with the provisions set forth in sections 552b(c)(4) and 552b(c)(6), Title 5 U.S.C., as amended. The grant applications and the discussions could disclose confidential trade secrets or commercial property such as patentable material, and personal information concerning individuals associated with the grant applications, the disclosure of which would constitute a clearly unwarranted invasion of person privacy.

Name of Committee: National Institute of Neurological Disorders and Stroke Special Emphasis Panel, Headache Investigations.

Date: July 31, 2006.

Time: 2 p.m. to 4 p.m.

Agenda: To review and evaluate grant applications.

Place: National Institutes of Health, Neuroscience Center, 6001 Executive Boulevard, Rockville, MD 20852 (Telephone Conference Call).

Contact Person: Andrea Sawczuk, DDS, PhD, Scientific Review Administrator, Scientific Review Branch, Division of Extramural Research, NINDS/NIH/DHHS, 6001 Executive Boulevard, Room #3208, Bethesda, MD 20892. 301–496–0660. *sawczuka@ninds.nih.gov.*

This notice is being published less than 15 days prior to the meeting due to the timining limitations imposed by the review and funding cycle.

Name of Committee: National Institute of Neurological Disorders and Stroke Special Emphasis Panel, Genetics Linkage Studies.

Date: August 3, 2006.

Time: 1:30 p.m. to 3 p.m.

Agenda: To review and evaluate grant applications.

Place: National Institutes of Health, Neuroscience Center, 6001 Executive Boulevard, Rockville, MD 20852 (Telephone Conference Call).

Contact Person: Andrea Sawczuk, DDS, PhD, Scientific Review Administrator, Scientific Review Branch, Division of Extramural Research, NINDS/NIH/DHHS, 6001 Executive Boulevard, Room #3208,

Bethesda, MD 20892. 301–496–0660. *sawczuka@ninds.nih.gov*.

Name of Committee: National Institute of Neurological Disorders and Stroke Special Emphasis Panel, CounterACT–U54.

Date: August 10–11, 2006.

Time: 1 p.m. to 5 p.m.

Agenda: To review and evaluate grant applications.

Place: Williard Intercontinental Hotel, 1401 Pennsylvania Avenue, Washington, DC 20004.

Contact Person: Richard D. Crosland, PhD, Scientific Review Administrator, Scientific Review Branch, Division of Extramural Research, NINDS/NIH/DHHS-Neuroscience Center, 6001 Executive Boulevard, Suite 3208, MSC 9529, Bethesda, MD 20892–9529. 301–594–0635. *rc218u@nih.gov*.

(Catalogue of Federal Domestic Assistance Program Nos. 93.853, Clinical Research Related to Neurological Disorders; 93.854, Biological Basis Research in the Neurosciences, National Institutes of Health, HHS)

Dated: July 14, 2006.

Anna Snouffer,

Acting Director, Office of Federal Advisory Committee Policy.

[FR Doc. 06–6373 Filed 7–19–06; 8:45 am]

BILLING CODE 4140–01–M

DEPARTMENT OF HEALTH AND HUMAN SERVICES

Substance Abuse and Mental Health Services Administration

Center for Substance Abuse Treatment; Notice of Meeting

Pursuant to Public Law 92–463, notice is hereby given of a Teleconference Meeting of the Center for Substance Abuse Treatment (CSAT) National Advisory Council to be held August 30, 2006.

The meeting will include the review, discussion and evaluation of grant applications reviewed by IRGs. Therefore, the meeting will be closed to the public as determined by the SAMHSA Administrator, in accordance with Title 5 U.S.C. 552b(c)(6) and 5 U.S.C. App. 2, section 10(d).

A summary of the meeting and a roster of Council members may be obtained by accessing the SAMHSA Advisory Council Web site (*www.samhsa.gov*) as soon as possible after the meeting, or by communicating with the contact whose name and telephone number are listed below.

Committee Name: Substance Abuse and Mental Health Services Administration, Center for Substance Abuse Treatment National Advisory Council.

Meeting Date: August 30, 2006.

Place: 1 Choke Cherry Road, Conference Room, 5–1146, Rockville, MD 20857.

Type: Closed: August 30, 2006—1:30 p.m.–2:30 p.m.

Contact: Cynthia A. Graham, M.S., Executive Secretary, SAMHSA/CSAT National Advisory Council, 1 Choke Cherry Road, Room 5–1036, Rockville, MD 20857, telephone: (240) 276–1692, fax: (240) 276–1690, e-mail: *cynthia.graham@samhsa.hhs.gov.*

Dated: July 13, 2006.

Toian Vaughn,

Committee Management Officer, Substance Abuse and Mental Health, Services Administration.

[FR Doc. E6–11533 Filed 7–19–06; 8:45 am]

BILLING CODE 4162–20–P

DEPARTMENT OF HEALTH AND HUMAN SERVICES

Substance Abuse and Mental Health Services Administration

Office for Women's Services; Notice of Meeting

Pursuant to Public Law 92–463, notice is hereby given of a Substance Abuse and Mental Health Services Administration's (SAMHSA) Advisory Committee for Women's Services teleconference meeting to be held in August 2006.

The teleconference meeting will be open and include discussions on SAMHSA's women's activities and programs for fiscal year 2006 as they relate to the Agency's priority matrix. The meeting will also include updates on SAMHSA's budget and reauthorization.

The public is invited to attend the meeting in person or listen to the discussions via telephone. Due to limited space, seating will be on a registration-only basis. To register, contact the Committee Executive Secretary, Ms. Carol Watkins (see contact information below), to obtain the teleconference call-in number and access code. Please communicate with Ms. Watkins to make arrangements to comment or to request special accommodations for persons with disabilities.

Substantive program information and a roster of Committee members may be obtained after the meeting by contacting Ms. Carol Watkins (see contact information below) or by accessing the SAMHSA Council Web site (*www.samhsa.gov*). The transcript for the session will also be available on the SAMHSA Council Web site within 3 weeks after the meeting.

Committee Name: Substance Abuse and Mental Health Services Administration, Advisory Committee for Women's Services.

Date/Time: Open: Thursday, August 3, 2006, 12 noon–2 p.m.

Place: 1 Choke Cherry Road, Conference Room 8–1082, Rockville, MD 20857.

Contact: Carol Watkins, Executive Secretary, Advisory Committee for Women's Services, 1 Choke Cherry Road, Room 8–1002, Rockville, MD 20857, Telephone: (240) 276–2254, Fax: (240) 276–1024, e-mail: *carol.watkin2@samhsa.hhs.gov.*

Dated: July 13, 2006.

Toian Vaughn,

Committee Management Officer, Substance Abuse and Mental Health Services Administration.

[FR Doc. E6–11534 Filed 7–19–06; 8:45 am]

BILLING CODE 4162–20–P

DEPARTMENT OF HOMELAND SECURITY

Coast Guard

[USCG–2006–25378]

Chemical Transportation Advisory Committee

AGENCY: Coast Guard, DHS.

ACTION: Notice of meeting.

SUMMARY: The Chemical Transportation Advisory Committee (CTAC) Subcommittee on Hazardous Cargo Transportation Security (HCTS) will meet to discuss various issues relating to the marine transportation of hazardous materials in bulk. The CTAC Working Groups on Barge Emissions and Placarding; the International Convention for the Prevention of Pollution from Ships, 1973 (MARPOL) Annex II; and Marine Vapor Control Systems will also meet to discuss environmental issues and proposed changes to regulations. These meetings will be open to the public.

DATES: The MARPOL Annex II Working Group will meet on Tuesday, July 25, 2006, from 8:30 a.m. to 4 p.m. The HCTS Subcommittee will meet on Wednesday, July 26, 2006, from 8:30 a.m. to 4 p.m. The Marine Vapor Control System Working Group will meet on Thursday, July 27, 2006, from 8:30 a.m. to 12:30 p.m. The Barge Emissions and Placarding Working Group will meet on Thursday, July 27, 2006, from 1 p.m. to 5 p.m. These meetings may close early if all business is finished. Written material and requests to make oral presentations should reach the Coast

Guard on or before July 24, 2006. Requests to have a copy of your material distributed to each member of the Committee should reach the Coast Guard on or before July 24, 2006.

ADDRESSES: All meetings will be held at Stolt-Nielsen Transportation Group Offices, 15635 Jacintoport Blvd, Houston, TX 77015. Send written material and requests to make oral presentations to Commander Robert J. Hennessy, Executive Director of CTAC, Commandant (G–PSO–3), U.S. Coast Guard Headquarters, 2100 Second Street, SW., Washington, DC 20593–0001 or e-mail: *CTAC@comdt.uscg.mil.* This notice is available on the Internet at *http://dms.dot.gov.*

FOR FURTHER INFORMATION CONTACT: Commander Robert J. Hennessy, Executive Director of CTAC, or Ms. Sara Ju, Assistant to the Executive Director, telephone 202–372–1425, fax 202–372–1926.

SUPPLEMENTARY INFORMATION: Notice of these meetings is given under the Federal Advisory Committee Act, 5 U.S.C. App. 2.

Agenda of MARPOL Annex II Working Group Meeting on Tuesday, July 25, 2006:

(1) Introduce Working Group members and attendees.

(2) Review and edit draft guidance document for the U.S. implementation of revisions to MARPOL Annex II and the International Code for the Construction and Equipment of Ships Carrying Dangerous Chemicals in Bulk (IBC Code).

Agenda of the HCTS Subcommittee on Wednesday, July 26, 2006:

(1) Introduce Subcommittee members and attendees.

(2) Finalize definition and supporting comments for certain dangerous cargo (CDC) residues.

(3) Discuss current Notice of Arrival regulations, current problems with regulations and possible solutions. Note: The Subcommittee is especially interested in hearing from any member of the maritime industry or associations representing the maritime industry who have concerns with the Notice of Arrival regulations.

Agenda of Marine Vapor Control Systems Working Group Meeting on Thursday, July 27, 2006:

(1) Introduce Working Group members and attendees.

(2) Review vapor balancing operations during cargo unloading.

(3) Review previous CTAC recommendations on vapor balancing operations during cargo unloading.

(4) Develop recommendations for conducting vapor balancing operations during cargo unloading.

Agenda of Barge Emissions and Placarding Working Group Meeting on Thursday, July 27, 2006:

(1) Introduce Working Group members and attendees.

(2) Develop plan to assist first responder identifying cargoes on inland barges.

Procedural

These meetings are open to the public. Please note that the meetings may close early if all business is finished. At the discretion of the Chair, members of the public may make oral presentations during the meetings generally limited to 5 minutes. If you would like to make an oral presentation at a meeting, please notify the Executive Director and submit written material on or before July 24, 2006. If you would like a copy of your material distributed to each member of the Committee in advance of a meeting, please submit 25 copies to the Executive Director (see **ADDRESSES**) no later than July 24, 2006.

Information on Services for Individuals With Disabilities

For information on facilities or services for individuals with disabilities, or to request special assistance at the meeting, telephone the Executive Director as soon as possible.

Dated: July 12, 2006.

Howard L. Hime,

Acting Director of National and International Standards, Assistant Commandant for Prevention.

[FR Doc. E6–11488 Filed 7–19–06; 8:45 am]

BILLING CODE 4910–15–P

DEPARTMENT OF HOMELAND SECURITY

Federal Emergency Management Agency

[FEMA–1654–DR]

Delaware; Major Disaster and Related Determinations

AGENCY: Federal Emergency Management Agency, Department of Homeland Security.

ACTION: Notice.

SUMMARY: This is a notice of the Presidential declaration of a major disaster for the State of Delaware (FEMA–1654–DR), dated July 5, 2006, and related determinations.

DATES: *Effective Date:* July 5, 2006.

FOR FURTHER INFORMATION CONTACT: Magda Ruiz, Recovery Division, Federal Emergency Management Agency, Washington, DC 20472, (202) 646–2705.

SUPPLEMENTARY INFORMATION: Notice is hereby given that, in a letter dated July 5, 2006, the President declared a major disaster under the authority of the Robert T. Stafford Disaster Relief and Emergency Assistance Act, 42 U.S.C. 5121–5206 (the Stafford Act), as follows:

I have determined that the damage in certain areas of the State of Delaware resulting from severe storms and flooding beginning on June 23, 2006, and continuing, is of sufficient severity and magnitude to warrant a major disaster declaration under the Robert T. Stafford Disaster Relief and Emergency Assistance Act, 42 U.S.C. 5121–5206 (the Stafford Act). Therefore, I declare that such a major disaster exists in the State of Delaware.

In order to provide Federal assistance, you are hereby authorized to allocate from funds available for these purposes such amounts as you find necessary for Federal disaster assistance and administrative expenses.

You are authorized to provide Public Assistance in the designated areas, Hazard Mitigation throughout the State, and any other forms of assistance under the Stafford Act you may deem appropriate. Consistent with the requirement that Federal assistance be supplemental, any Federal funds provided under the Stafford Act for Public Assistance and Hazard Mitigation will be limited to 75 percent of the total eligible costs. If Other Needs Assistance under Section 408 of the Stafford Act is later requested and warranted, Federal funding under that program will also be limited to 75 percent of the total eligible costs. Further, you are authorized to make changes to this declaration to the extent allowable under the Stafford Act.

The Federal Emergency Management Agency (FEMA) hereby gives notice that pursuant to the authority vested in the Director, under Executive Order 12148, as amended, Glen R. Sachtleben, of FEMA is appointed to act as the Federal Coordinating Officer for this declared disaster.

I do hereby determine the following areas of the State of Delaware to have been affected adversely by this declared major disaster:

Sussex County for Public Assistance.

All counties within the State of Delaware are eligible to apply for assistance under the Hazard Mitigation Grant Program.

(The following Catalog of Federal Domestic Assistance Numbers (CFDA) are to be used for reporting and drawing funds: 97.030, Community Disaster Loans; 97.031, Cora Brown Fund Program; 97.032, Crisis Counseling; 97.033, Disaster Legal Services Program; 97.034, Disaster Unemployment Assistance (DUA); 97.046, Fire Management Assistance; 97.048, Individuals and Households Housing; 97.049, Individuals and Households Disaster Housing Operations; 97.050, Individuals and Households Program—Other Needs; 97.036, Public

Assistance Grants; 97.039, Hazard Mitigation Grant Program.)

R. David Paulison,

Under Secretary for Federal Emergency Management and Director of FEMA.

[FR Doc. E6–11509 Filed 7–19–06; 8:45 am]

BILLING CODE 9110–10–P

DEPARTMENT OF HOMELAND SECURITY

Federal Emergency Management Agency

[FEMA–1603–DR]

Louisiana; Amendment No. 11 to Notice of a Major Disaster Declaration

AGENCY: Federal Emergency Management Agency, Department of Homeland Security.

ACTION: Notice.

SUMMARY: This notice amends the notice of a major disaster for the State of Louisiana (FEMA–1603–DR), dated August 29, 2005, and related determinations.

DATES: *Effective Date:* June 29, 2006.

FOR FURTHER INFORMATION CONTACT: Magda Ruiz, Recovery Division, Federal Emergency Management Agency, Washington, DC 20472, (202) 646–2705.

SUPPLEMENTARY INFORMATION: Notice is hereby given that, in a letter dated June 29, 2006, the President amended the cost-sharing arrangements concerning Federal funds provided under the authority of the Robert T. Stafford Disaster Relief and Emergency Assistance Act, 42 U.S.C. 5121–5206 (Stafford Act), in a letter to R. David Paulison, Director, Federal Emergency Management Agency, Department of Homeland Security, as follows:

I have determined that the damage in certain areas of the State of Louisiana resulting from Hurricane Katrina, during the period of August 29 to November 1, 2005, is of sufficient severity and magnitude that special cost-sharing arrangements are warranted regarding Federal funds provided under the Robert T. Stafford Disaster Relief and Emergency Assistance Act, 42 U.S.C. 5121–5206 (the Stafford Act).

Therefore, I amend my declarations of August 29, 2005, September 1, 2005, October 22, 2005, November 19, 2005, and December 20, 2005, to authorize Federal funds for debris removal, including direct Federal assistance, under the Public Assistance program, at 100 percent of total eligible costs, through and including December 31, 2006, for the parishes of Orleans, St. Bernard, St. Tammany, Washington, and Plaquemines.

Please notify Governor Blanco and the Federal Coordinating Officer of this amendment to my major disaster declarations.

This cost share is effective as of the date of the President's major disaster declaration.

(The following Catalog of Federal Domestic Assistance Numbers (CFDA) are to be used for reporting and drawing funds: 97.030, Community Disaster Loans; 97.031, Cora Brown Fund Program; 97.032, Crisis Counseling; 97.033, Disaster Legal Services Program; 97.034, Disaster Unemployment Assistance (DUA); 97.046, Fire Management Assistance; 97.048, Individuals and Households Housing; 97.049, Individuals and Households Disaster Housing Operations; 97.050, Individuals and Households Program—Other Needs; 97.036, Public Assistance Grants; 97.039, Hazard Mitigation Grant Program.)

R. David Paulison,

Under Secretary for Federal Emergency Management and Director of FEMA.

[FR Doc. E6–11512 Filed 7–19–06; 8:45 am]

BILLING CODE 9110–10–P

DEPARTMENT OF HOMELAND SECURITY

Federal Emergency Management Agency

[FEMA–1652–DR]

Maryland; Major Disaster and Related Determinations

AGENCY: Federal Emergency Management Agency, Department of Homeland Security.

ACTION: Notice.

SUMMARY: This is a notice of the Presidential declaration of a major disaster for the State of Maryland (FEMA–1652–DR), dated July 2, 2006, and related determinations.

EFFECTIVE DATE: July 2, 2006.

FOR FURTHER INFORMATION CONTACT: Magda Ruiz, Recovery Division, Federal Emergency Management Agency, Washington, DC 20472, (202) 646–2705.

SUPPLEMENTARY INFORMATION: Notice is hereby given that, in a letter dated July 2, 2006, the President declared a major disaster under the authority of the Robert T. Stafford Disaster Relief and Emergency Assistance Act, 42 U.S.C. 5121–5206 (the Stafford Act), as follows:

I have determined that the damage in certain areas of the State of Maryland resulting from severe storms, flooding, and tornadoes beginning on June 22, 2006, and continuing, is of sufficient severity and magnitude to warrant a major disaster declaration under the Robert T. Stafford Disaster Relief and Emergency Assistance Act, 42 U.S.C. 5121–5206 (the Stafford Act). Therefore, I declare that such a major disaster exists in the State of Maryland.

In order to provide Federal assistance, you are hereby authorized to allocate from funds available for these purposes such amounts as you find necessary for Federal disaster assistance and administrative expenses.

You are authorized to provide Public Assistance in the designated areas, Hazard Mitigation throughout the State, and any other forms of assistance under the Stafford Act you may deem appropriate. Consistent with the requirement that Federal assistance be supplemental, any Federal funds provided under the Stafford Act for Public Assistance and Hazard Mitigation will be limited to 75 percent of the total eligible costs. If Other Needs Assistance under Section 408 of the Stafford Act is later requested and warranted, Federal funding under that program will also be limited to 75 percent of the total eligible costs. Further, you are authorized to make changes to this declaration to the extent allowable under the Stafford Act.

The Federal Emergency Management Agency (FEMA) hereby gives notice that pursuant to the authority vested in the Acting Director, under Executive Order 12148, as amended, William Lokey, of FEMA is appointed to act as the Federal Coordinating Officer for this declared disaster.

I do hereby determine the following areas of the State of Maryland to have been affected adversely by this declared major disaster: Caroline and Dorchester Counties for Public Assistance.

All counties within the State of Maryland are eligible to apply for assistance under the Hazard Mitigation Grant Program.

(The following Catalog of Federal Domestic Assistance Numbers (CFDA) are to be used for reporting and drawing funds: 97.030, Community Disaster Loans; 97.031, Cora Brown Fund Program; 97.032, Crisis Counseling; 97.033, Disaster Legal Services Program; 97.034, Disaster Unemployment Assistance (DUA); 97.046, Fire Management Assistance; 97.048, Individuals and Households Housing; 97.049, Individuals and Households Disaster Housing Operations; 97.050, Individuals and Households Program—Other Needs; 97.036, Public Assistance Grants; 97.039, Hazard Mitigation Grant Program.)

R. David Paulison,

Under Secretary for Federal Emergency Management and Director of FEMA.

[FR Doc. E6–11507 Filed 7–19–06; 8:45 am]

BILLING CODE 9110–10–P

DEPARTMENT OF HOMELAND SECURITY

Federal Emergency Management Agency

[FEMA–1604–DR]

Mississippi; Amendment No. 14 to Notice of a Major Disaster Declaration

AGENCY: Federal Emergency Management Agency, Department of Homeland Security.

ACTION: Notice.

SUMMARY: This notice amends the notice of a major disaster for the State of Mississippi (FEMA–1604–DR), dated August 29, 2005, and related determinations.

DATES: *Effective Date:* June 29, 2006.

FOR FURTHER INFORMATION CONTACT: Magda Ruiz, Recovery Division, Federal Emergency Management Agency, Washington, DC 20472, (202) 646–2705.

SUPPLEMENTARY INFORMATION: Notice is hereby given that, in a letter dated June 29, 2006, the President amended the cost-sharing arrangements concerning Federal funds provided under the authority of the Robert T. Stafford Disaster Relief and Emergency Assistance Act, 42 U.S.C. 5121–5206 (Stafford Act), in a letter to R. David Paulison, Director, Federal Emergency Management Agency, Department of Homeland Security, as follows:

I have determined that the damage in certain areas of the State of Mississippi resulting from Hurricane Katrina, during the period of August 29 to October 14, 2005, is of sufficient severity and magnitude that special cost-sharing arrangements are warranted regarding Federal funds provided under the Robert T. Stafford Disaster Relief and Emergency Assistance Act, 42 U.S.C. 5121–5206.

Therefore, I amend my declarations of August 29, 2005, September 1, 2005, October 22, 2005, November 19, 2005, December 21, 2005, and March 7, 2006, to authorize Federal funds for debris removal (Category A), including direct Federal assistance, under the Public Assistance program at 100 percent of total eligible costs through and including May 15, 2007. The area eligible for assistance is limited to existing projects in the Mississippi Sound. The Sound also incorporates rivers and tributaries in the southern Mississippi region that are part of the intra-coastal waterway system.

Please notify Governor Barbour and the Federal Coordinating Officer of this amendment to my major disaster declarations.

This cost share is effective as of the date of the President's major disaster declaration.

(The following Catalog of Federal Domestic Assistance Numbers (CFDA) are to be used for reporting and drawing funds: 97.030, Community Disaster Loans; 97.031, Cora Brown Fund Program; 97.032, Crisis Counseling; 97.033, Disaster Legal Services Program; 97.034, Disaster Unemployment Assistance (DUA); 97.046, Fire Management Assistance; 97.048, Individuals and Households Housing; 97.049, Individuals and Households Disaster Housing Operations; 97.050, Individuals and Households Program—Other Needs; 97.036, Public Assistance Grants; 97.039, Hazard Mitigation Grant Program.)

R. David Paulison,

Under Secretary for Federal Emergency Management and Director of FEMA.

[FR Doc. E6–11513 Filed 7–19–06; 8:45 am]

BILLING CODE 9110–10–P

DEPARTMENT OF HOMELAND SECURITY

Federal Emergency Management Agency

[FEMA–1653–DR]

New Jersey; Major Disaster and Related Determinations

AGENCY: Federal Emergency Management Agency, Department of Homeland Security.

ACTION: Notice.

SUMMARY: This is a notice of the Presidential declaration of a major disaster for the State of New Jersey (FEMA–1653–DR), dated July 7, 2006, and related determinations.

DATES: *Effective Date:* July 7, 2006.

FOR FURTHER INFORMATION CONTACT: Magda Ruiz, Recovery Division, Federal Emergency Management Agency, Washington, DC 20472, (202) 646–2705.

SUPPLEMENTARY INFORMATION: Notice is hereby given that, in a letter dated July 7, 2006, the President declared a major disaster under the authority of the Robert T. Stafford Disaster Relief and Emergency Assistance Act, 42 U.S.C. 5121–5206 (the Stafford Act), as follows:

I have determined that the damage in certain areas of the State of New Jersey resulting from severe storms and flooding beginning on June 23, 2006, and continuing, is of sufficient severity and magnitude to warrant a major disaster declaration under the Robert T. Stafford Disaster Relief and Emergency Assistance Act, 42 U.S.C. 5121–5206 (the Stafford Act). Therefore, I declare that such a major disaster exists in the State of New Jersey.

In order to provide Federal assistance, you are hereby authorized to allocate from funds available for these purposes such amounts as you find necessary for Federal disaster assistance and administrative expenses.

You are authorized to provide Individual Assistance and assistance for debris removal and emergency protective measures (Categories A and B) under the Public Assistance program in the designated areas, as well as Hazard Mitigation throughout the State, and any other forms of assistance under the Stafford Act you may deem appropriate. Direct Federal assistance is authorized. Consistent with the requirement that Federal assistance be supplemental, any Federal funds provided under the Stafford Act for Public Assistance, Hazard Mitigation, and Other Needs Assistance will be limited to 75 percent of the total eligible costs. Further, you are authorized to make changes to this declaration to the extent allowable under the Stafford Act.

The time period prescribed for the implementation of section 310(a), Priority to Certain Applications for Public Facility and Public Housing Assistance, 42 U.S.C. 5153, shall be for a period not to exceed six months after the date of this declaration.

The Federal Emergency Management Agency (FEMA) hereby gives notice that pursuant to the authority vested in the Director, under Executive Order 12148, as amended, Peter J. Martinasco, of FEMA is appointed to act as the Federal Coordinating Officer for this declared disaster.

I do hereby determine the following areas of the State of New Jersey to have been affected adversely by this declared major disaster:

Hunterdon, Mercer, and Warren Counties for Individual Assistance. Hunterdon, Mercer, Sussex, and Warren Counties for debris removal and emergency protective measures [Categories A and B] under the Public Assistance Program, including direct Federal assistance.

All counties within the State of New Jersey are eligible to apply for assistance under the Hazard Mitigation Grant Program.

(The following Catalog of Federal Domestic Assistance Numbers (CFDA) are to be used for reporting and drawing funds: 97.030, Community Disaster Loans; 97.031, Cora Brown Fund Program; 97.032, Crisis Counseling; 97.033, Disaster Legal Services Program; 97.034, Disaster Unemployment Assistance (DUA); 97.046, Fire Management Assistance; 97.048, Individuals and Households Housing; 97.049, Individuals and Households Disaster Housing Operations; 97.050, Individuals and Households Program—Other Needs; 97.036, Public Assistance Grants; 97.039, Hazard Mitigation Grant Program.)

R. David Paulison,

Under Secretary for Federal Emergency Management and Director of FEMA.

[FR Doc. E6–11508 Filed 7–19–06; 8:45 am]

BILLING CODE 9110–10–P

DEPARTMENT OF HOMELAND SECURITY

Federal Emergency Management Agency

[FEMA–1650–DR]

New York; Major Disaster and Related Determinations

AGENCY: Federal Emergency Management Agency, Department of Homeland Security.

ACTION: Notice.

SUMMARY: This is a notice of the Presidential declaration of a major disaster for the State of New York (FEMA–1650–DR), dated July 1, 2006, and related determinations.

DATES: *Effective Date:* July 1, 2006.

FOR FURTHER INFORMATION CONTACT: Magda Ruiz, Recovery Division, Federal Emergency Management Agency, Washington, DC 20472, (202) 646–2705.

SUPPLEMENTARY INFORMATION: Notice is hereby given that, in a letter dated July 1, 2006, the President declared a major disaster under the authority of the Robert T. Stafford Disaster Relief and Emergency Assistance Act, 42 U.S.C. 5121–5206 (the Stafford Act), as follows:

I have determined that the damage in certain areas of the State of New York resulting from severe storms and flooding beginning on June 26, 2006, and continuing, is of sufficient severity and magnitude to warrant a major disaster declaration under the Robert T. Stafford Disaster Relief and Emergency Assistance Act, 42 U.S.C. 5121–5206 (the Stafford Act). Therefore, I declare that such a major disaster exists in the State of New York.

In order to provide Federal assistance, you are hereby authorized to allocate from funds available for these purposes such amounts as you find necessary for Federal disaster assistance and administrative expenses.

You are authorized to provide assistance for debris removal and emergency protective measures (Categories A and B) under the Public Assistance program in the designated areas, as well as Hazard Mitigation throughout the State, and any other forms of assistance under the Stafford Act you may deem appropriate, subject to completion of Preliminary Damage Assessments (PDAs), unless you determine that the incident is of such unusual severity and magnitude that PDAs are not required to determine the need for supplemental Federal assistance pursuant to 44 CFR 206.33(d). Direct Federal assistance is authorized.

Consistent with the requirement that Federal assistance be supplemental, any Federal funds provided under the Stafford Act for Public Assistance and Hazard Mitigation will be limited to 75 percent of the total eligible costs. If Other Needs Assistance is later warranted, Federal funding under that program will also be limited to 75 percent of the total eligible costs.

Further, you are authorized to make changes to this declaration to the extent allowable under the Stafford Act.

The Federal Emergency Management Agency (FEMA) hereby gives notice that pursuant to the authority vested in the Director, under Executive Order 12148, as amended, Marianne C. Jackson, of FEMA is appointed to act as the Federal Coordinating Officer for this declared disaster.

I do hereby determine the following areas of the State of New York to have been affected adversely by this declared major disaster:

Broome, Chenango, Delaware, Herkimer, Montgomery, Otsego, Sullivan, and Ulster Counties for debris removal and emergency protective measures (Categories A and B) under the Public Assistance program, including direct Federal assistance.

All counties within the State of New York are eligible to apply for assistance under the Hazard Mitigation Grant Program.

(The following Catalog of Federal Domestic Assistance Numbers (CFDA) are to be used for reporting and drawing funds: 97.030, Community Disaster Loans; 97.031, Cora Brown Fund Program; 97.032, Crisis Counseling; 97.033, Disaster Legal Services Program; 97.034, Disaster Unemployment Assistance (DUA); 97.046, Fire Management Assistance; 97.048, Individual and Household Housing; 97.049, Individual and Household Disaster Housing Operations; 97.050, Individual and Household Program—Other Needs; 97.036, Public Assistance Grants; 97.039, Hazard Mitigation Grant Program.)

R. David Paulison,

Under Secretary for Federal Emergency Management and Director of FEMA.

[FR Doc. E6–11502 Filed 7–19–06; 8:45 am]

BILLING CODE 9110–10–P

DEPARTMENT OF HOMELAND SECURITY

Federal Emergency Management Agency

[FEMA–1650–DR]

New York; Amendment No. 1 to Notice of a Major Disaster Declaration

AGENCY: Federal Emergency Management Agency, Department of Homeland Security.

ACTION: Notice.

SUMMARY: This notice amends the notice of a major disaster declaration for the State of New York (FEMA–1650–DR), dated July 1, 2006, and related determinations.

DATES: *Effective Date:* July 3, 2006.

FOR FURTHER INFORMATION CONTACT: Magda Ruiz, Recovery Division, Federal Emergency Management Agency, Washington, DC 20472, (202) 646–2705.

SUPPLEMENTARY INFORMATION: The notice of a major disaster declaration for the State of New York is hereby amended to include the Individual Assistance Program for the following areas among those areas determined to have been adversely affected by the catastrophe declared a major disaster by the President in his declaration of July 1, 2006:

Broome, Chenango, Delaware, Herkimer, Montgomery, Otsego, Sullivan, and Ulster Counties for Individual Assistance (already designated for debris removal and emergency protective measures [Categories A and B] under the Public Assistance program, including direct Federal assistance).

Oneida, Orange, Schoharie, and Tioga Counties for Individual Assistance.

(The following Catalog of Federal Domestic Assistance Numbers (CFDA) are to be used for reporting and drawing funds: 97.030, Community Disaster Loans; 97.031, Cora Brown Fund Program; 97.032, Crisis Counseling; 97.033, Disaster Legal Services Program; 97.034, Disaster Unemployment Assistance (DUA); 97.046, Fire Management Assistance; 97.048, Individuals and Households Housing; 97.049, Individuals and Households Disaster Housing Operations; 97.050 Individuals and Households Program—Other Needs, 97.036, Public Assistance Grants; 97.039, Hazard Mitigation Grant Program.)

R. David Paulison,

Under Secretary for Federal Emergency Management and Director of FEMA.

[FR Doc. E6–11504 Filed 7–19–06; 8:45 am]

BILLING CODE 9110–10–P

DEPARTMENT OF HOMELAND SECURITY

Federal Emergency Management Agency

[FEMA–1650–DR]

New York; Amendment No. 2 to Notice of a Major Disaster Declaration

AGENCY: Federal Emergency Management Agency, Department of Homeland Security.

ACTION: Notice.

SUMMARY: This notice amends the notice of a major disaster declaration for the State of New York (FEMA–1650–DR), dated July 1, 2006, and related determinations.

DATES: *Effective Date:* July 7, 2006.

FOR FURTHER INFORMATION CONTACT: Magda Ruiz, Recovery Division, Federal Emergency Management Agency, Washington, DC 20472, (202) 646–2705.

SUPPLEMENTARY INFORMATION: The notice of a major disaster declaration for the State of New York is hereby amended to include the following areas among those areas determined to have been adversely affected by the catastrophe declared a major disaster by the President in his declaration of July 1, 2006:

Broome, Chenango, Delaware, Herkimer, Montgomery, Otsego, Sullivan, and Ulster Counties for Public Assistance [Categories C–G] (already designated for Individual Assistance and debris removal and emergency protective measures [Categories A and B] under the Public Assistance program, including direct Federal Assistance).

Oneida, Schoharie, and Tioga Counties for Public Assistance (already designated for Individual Assistance).
Cortland, Fulton, Greene, Hamilton, Madison, Rensselaer, Schenectady, and Tompkins Counties for Public Assistance.

(The following Catalog of Federal Domestic Assistance Numbers (CFDA) are to be used for reporting and drawing funds: 97.030, Community Disaster Loans; 97.031, Cora Brown Fund Program; 97.032, Crisis Counseling; 97.033, Disaster Legal Services Program; 97.034, Disaster Unemployment Assistance (DUA); 97.046, Fire Management Assistance; 97.048, Individuals and Households Housing; 97.049, Individuals and Households Disaster Housing Operations; 97.050, Individuals and Households Program—Other Needs, 97.036, Public Assistance Grants; 97.039, Hazard Mitigation Grant Program)

R. David Paulison,

Under Secretary for Federal Emergency Management and Director of FEMA.

[FR Doc. E6–11505 Filed 7–19–06; 8:45 am]

BILLING CODE 9110–10–P

DEPARTMENT OF HOMELAND SECURITY

Federal Emergency Management Agency

[FEMA–1651–DR]

Ohio; Major Disaster and Related Determinations

AGENCY: Federal Emergency Management Agency, Department of Homeland Security.

ACTION: Notice.

SUMMARY: This is a notice of the Presidential declaration of a major disaster for the State of Ohio (FEMA–1651–DR), dated July 2, 2006, and related determinations.

DATES: *Effective Date:* July 2, 2006.

FOR FURTHER INFORMATION CONTACT: Magda Ruiz, Recovery Division, Federal Emergency Management Agency, Washington, DC 20472, (202) 646–2705.

SUPPLEMENTARY INFORMATION: Notice is hereby given that, in a letter dated July 2, 2006, the President declared a major disaster under the authority of the Robert T. Stafford Disaster Relief and Emergency Assistance Act, 42 U.S.C. 5121–5206 (the Stafford Act), as follows:

I have determined that the damage in certain areas of the State of Ohio resulting from severe storms, tornadoes, straight line winds, and flooding during the period of June 21–23, 2006, is of sufficient severity and magnitude to warrant a major disaster declaration under the Robert T. Stafford Disaster Relief and Emergency Assistance Act, 42 U.S.C. 5121–5206 (the Stafford Act). Therefore, I declare that such a major disaster exists in the State of Ohio.

In order to provide Federal assistance, you are hereby authorized to allocate from funds available for these purposes such amounts as you find necessary for Federal disaster assistance and administrative expenses.

You are authorized to provide Individual Assistance in the designated areas, Hazard Mitigation throughout the State, and any other forms of assistance under the Stafford Act you may deem appropriate. Consistent with the requirement that Federal assistance be supplemental, any Federal funds provided under the Stafford Act for Hazard Mitigation and Other Needs Assistance will be limited to 75 percent of the total eligible costs. If Public Assistance is later requested and warranted, Federal funds provided under that program will also be limited to 75 percent of the total eligible costs. Further, you are authorized to make changes to this declaration to the extent allowable under the Stafford Act.

The time period prescribed for the implementation of section 310(a), Priority to Certain Applications for Public Facility and Public Housing Assistance, 42 U.S.C. 5153, shall be for a period not to exceed six months after the date of this declaration.

The Federal Emergency Management Agency (FEMA) hereby gives notice that pursuant to the authority vested in the Director, under Executive Order 12148, as amended, Jesse F. Munoz, of FEMA is appointed to act as the Federal Coordinating Officer for this declared disaster.

I do hereby determine the following areas of the State of Ohio to have been affected adversely by this declared major disaster:

Cuyahoga, Erie, Huron, Lucas, Sandusky, and Stark Counties for Individual Assistance.

All counties within the State of Ohio are eligible to apply for assistance under the Hazard Mitigation Grant Program.

(The following Catalog of Federal Domestic Assistance Numbers (CFDA) are to be used for reporting and drawing funds: 97.030, Community Disaster Loans; 97.031, Cora Brown Fund Program; 97.032, Crisis Counseling; 97.033, Disaster Legal Services Program; 97.034, Disaster Unemployment Assistance (DUA); 97.046, Fire Management Assistance; 97.048, Individuals and Households Housing; 97.049, Individuals and Households Disaster Housing Operations; 97.050, Individuals and Households Program—Other Needs; 97.036, Public Assistance Grants; 97.039, Hazard Mitigation Grant Program.)

R. David Paulison,

Under Secretary for Federal Emergency Management and Director of FEMA.

[FR Doc. E6–11506 Filed 7–19–06; 8:45 am]

BILLING CODE 9110–10–P

DEPARTMENT OF HOMELAND SECURITY

Federal Emergency Management Agency

[FEMA–1649–DR]

Pennsylvania; Amendment No. 3 to Notice of a Major Disaster Declaration

AGENCY: Federal Emergency Management Agency, Department of Homeland Security.

ACTION: Notice.

SUMMARY: This notice amends the notice of a major disaster declaration for the Commonwealth of Pennsylvania (FEMA–1649–DR), dated June 30, 2006, and related determinations.

DATES: *Effective Date:* July 6, 2006.

FOR FURTHER INFORMATION CONTACT: Magda Ruiz, Recovery Division, Federal Emergency Management Agency, Washington, DC 20472, (202) 646–2705.

SUPPLEMENTARY INFORMATION: The notice of a major disaster declaration for the Commonwealth of Pennsylvania is hereby amended to include the following areas among those areas determined to have been adversely affected by the catastrophe declared a major disaster by the President in his declaration of June 30, 2006:

Franklin and Montgomery Counties for Individual Assistance.
Bucks, Columbia, and Northampton Counties for Individual Assistance (already designated for debris removal and emergency protective measures [Categories A and B] under the Public Assistance program, including direct Federal assistance).

(The following Catalog of Federal Domestic Assistance Numbers (CFDA) are to be used for reporting and drawing funds: 97.030, Community Disaster Loans; 97.031, Cora Brown Fund Program; 97.032, Crisis Counseling; 97.033, Disaster Legal Services Program; 97.034, Disaster Unemployment Assistance (DUA); 97.046, Fire Management Assistance; 97.048, Individuals and Households Housing; 97.049, Individuals and Households Disaster Housing Operations; 97.050, Individuals and Households Program—Other Needs; 97.036, Public Assistance Grants; 97.039, Hazard Mitigation Grant Program.)

R. David Paulison,

Under Secretary for Federal Emergency Management and Director of FEMA.

[FR Doc. E6–11500 Filed 7–19–06; 8:45 am]

BILLING CODE 9110–10–P

DEPARTMENT OF HOMELAND SECURITY

Federal Emergency Management Agency

[FEMA–1649–DR]

Pennsylvania; Amendment No. 2 to Notice of a Major Disaster Declaration

AGENCY: Federal Emergency Management Agency, Department of Homeland Security.

ACTION: Notice.

SUMMARY: This notice amends the notice of a major disaster declaration for the Commonwealth of Pennsylvania (FEMA–1649–DR), dated June 30, 2006, and related determinations.

DATES: *Effective Date:* July 5, 2006.

FOR FURTHER INFORMATION CONTACT: Magda Ruiz, Recovery Division, Federal Emergency Management Agency, Washington, DC 20472, (202) 646–2705.

SUPPLEMENTARY INFORMATION: The notice of a major disaster declaration for the Commonwealth of Pennsylvania is hereby amended to include the following areas among those areas determined to have been adversely affected by the catastrophe declared a major disaster by the President in his declaration of June 30, 2006:

Berks, Chester, and Pike Counties for Individual Assistance.

Bradford and Luzerne Counties for Individual Assistance (already designated for debris removal and emergency protective measures [Categories A and B] under the Public Assistance program, including direct Federal assistance).

(The following Catalog of Federal Domestic Assistance Numbers (CFDA) are to be used for reporting and drawing funds: 97.030, Community Disaster Loans; 97.031, Cora Brown Fund Program; 97.032, Crisis Counseling; 97.033, Disaster Legal Services Program; 97.034, Disaster Unemployment Assistance (DUA); 97.046, Fire Management Assistance; 97.048, Individuals and Households Housing; 97.049, Individuals and Households Disaster Housing Operations; 97.050, Individuals and Households Program—Other Needs; 97.036, Public Assistance Grants; 97.039, Hazard Mitigation Grant Program.)

R. David Paulison,

Under Secretary for Federal Emergency Management and Director of FEMA.

[FR Doc. E6–11501 Filed 7–19–06; 8:45 am]

BILLING CODE 9110–10–P

DEPARTMENT OF HOMELAND SECURITY

Federal Emergency Management Agency

[FEMA–1649–DR]

Pennsylvania; Amendment No. 1 to Notice of a Major Disaster Declaration

AGENCY: Federal Emergency Management Agency, Department of Homeland Security.

ACTION: Notice.

SUMMARY: This notice amends the notice of a major disaster declaration for the Commonwealth of Pennsylvania (FEMA–1649–DR), dated June 30, 2006, and related determinations.

DATES: *Effective Date:* July 4, 2006.

FOR FURTHER INFORMATION CONTACT: Magda Ruiz, Recovery Division, Federal Emergency Management Agency, Washington, DC 20472, (202) 646–2705.

SUPPLEMENTARY INFORMATION: The notice of a major disaster declaration for the Commonwealth of Pennsylvania is hereby amended to include the Individual Assistance program for the following areas among those areas determined to have been adversely affected by the catastrophe declared a major disaster by the President in his declaration of June 30, 2006:

Monroe, Schuylkill, and Wayne Counties for Individual Assistance.

Susquehanna and Wyoming Counties for Individual Assistance (already designated for debris removal and emergency protective measures [Categories A and B] under the Public Assistance program, including direct Federal assistance).

(The following Catalog of Federal Domestic Assistance Numbers (CFDA) are to be used for reporting and drawing funds: 97.030, Community Disaster Loans; 97.031, Cora Brown Fund Program; 97.032, Crisis Counseling; 97.033, Disaster Legal Services Program; 97.034, Disaster Unemployment Assistance (DUA); 97.046, Fire Management Assistance; 97.048, Individuals and Households Housing; 97.049, Individuals and Households Disaster Housing Operations; 97.050, Individuals and Households Program—Other Needs; 97.036, Public Assistance Grants; 97.039, Hazard Mitigation Grant Program.)

R. David Paulison,

Under Secretary for Federal Emergency Management and Director of FEMA.

[FR Doc. E6–11503 Filed 7–19–06; 8:45 am]

BILLING CODE 6718–10–P

DEPARTMENT OF HOMELAND SECURITY

Federal Emergency Management Agency

[FEMA–1649–DR]

Pennsylvania; Amendment No. 4 to Notice of a Major Disaster Declaration

AGENCY: Federal Emergency Management Agency, Department of Homeland Security.

ACTION: Notice.

SUMMARY: This notice amends the notice of a major disaster declaration for the Commonwealth of Pennsylvania (FEMA–1649–DR), dated June 30, 2006, and related determinations.

DATES: *Effective Date:* July 7, 2006.

FOR FURTHER INFORMATION CONTACT: Magda Ruiz, Recovery Division, Federal Emergency Management Agency, Washington, DC 20472, (202) 646–2705.

SUPPLEMENTARY INFORMATION: The notice of a major disaster declaration for the Commonwealth of Pennsylvania is hereby amended to include the following areas among those areas determined to have been adversely affected by the catastrophe declared a major disaster by the President in his declaration of June 30, 2006:

Dauphin, Lackawanna, Lancaster, Lebanon, and Montour Counties for Individual Assistance.

Northumberland County for Individual Assistance (already designated for debris removal and emergency protective measures [Categories A and B] under the Public Assistance program, including direct Federal assistance).

(The following Catalog of Federal Domestic Assistance Numbers (CFDA) are to be used for reporting and drawing funds: 97.030, Community Disaster Loans; 97.031, Cora Brown Fund Program; 97.032, Crisis Counseling; 97.033, Disaster Legal Services Program; 97.034, Disaster Unemployment Assistance (DUA); 97.046, Fire Management Assistance; 97.048, Individuals and Households Housing; 97.049, Individuals and Households Disaster Housing Operations; 97.050, Individuals and Households Program—Other Needs; 97.036, Public Assistance Grants; 97.039, Hazard Mitigation Grant Program.)

R. David Paulison,

Under Secretary for Federal Emergency Management and Director of FEMA.

[FR Doc. E6–11511 Filed 7–19–06; 8:45 am]

BILLING CODE 9110–10–P

DEPARTMENT OF HOMELAND SECURITY

Federal Emergency Management Agency

[FEMA–1649–DR]

Pennsylvania; Major Disaster and Related Determinations

AGENCY: Federal Emergency Management Agency, Department of Homeland Security.

ACTION: Notice.

SUMMARY: This is a notice of the Presidential declaration of a major disaster for the Commonwealth of Pennsylvania (FEMA–1649–DR), dated June 30, 2006, and related determinations.

DATES: *Effective Date:* June 30, 2006.

FOR FURTHER INFORMATION CONTACT: Magda Ruiz, Recovery Division, Federal Emergency Management Agency, Washington, DC 20472, (202) 646–2705.

SUPPLEMENTARY INFORMATION: Notice is hereby given that, in a letter dated June 30, 2006, the President declared a major disaster under the authority of the Robert T. Stafford Disaster Relief and Emergency Assistance Act, 42 U.S.C. 5121–5206 (the Stafford Act), as follows:

I have determined that the damage in certain areas of the Commonwealth of Pennsylvania resulting from severe storms, flooding, and mudslides beginning on June 23, 2006, and continuing, is of sufficient severity and magnitude to warrant a major disaster declaration under the Robert T. Stafford Disaster Relief and Emergency Assistance Act, 42 U.S.C. 5121–5206 (the Stafford Act). Therefore, I declare that such a major disaster exists in the Commonwealth of Pennsylvania.

In order to provide Federal assistance, you are hereby authorized to allocate from funds available for these purposes such amounts as you find necessary for Federal disaster assistance and administrative expenses.

You are authorized to provide assistance for debris removal and emergency protective measures (Categories A and B) under the Public Assistance program in the designated areas, as well as Hazard Mitigation throughout the State, and any other forms of assistance under the Stafford Act you may deem appropriate, subject to completion of Preliminary Damage Assessments (PDAs), unless you determine that the incident is of such unusual severity and magnitude that PDAs are not required to determine the need for supplemental Federal assistance pursuant to 44 CFR 206.33(d). Direct Federal assistance is authorized.

Consistent with the requirement that Federal assistance be supplemental, any Federal funds provided under the Stafford Act for Public Assistance and Hazard Mitigation will be limited to 75 percent of the total eligible costs. If Other Needs Assistance is later warranted, Federal funding under that program will also be limited to 75 percent of the total eligible costs. For a period of up to 72 hours, you are authorized to fund assistance for debris removal and emergency protective measures, including direct Federal assistance, at 100 percent of the total eligible costs.

Further, you are authorized to make changes to this declaration to the extent allowable under the Stafford Act.

The Federal Emergency Management Agency (FEMA) hereby gives notice that pursuant to the authority vested in the Director, under Executive Order 12148, as amended, Tom Davies, of FEMA is appointed to act as the Federal Coordinating Officer for this declared disaster.

I do hereby determine the following areas of the Commonwealth of Pennsylvania to have been affected adversely by this declared major disaster:

Bradford, Bucks, Columbia, Luzerne, Northampton, Northumberland, Susquehanna, and Wyoming Counties for debris removal and emergency protective measures (Categories A and B) under the Public Assistance Program, including direct Federal assistance. For a period of up to 72 hours, assistance for debris removal and emergency protective measures, including direct Federal assistance, will be provided at 100 percent of the total eligible costs.

All counties within the Commonwealth of Pennsylvania are eligible to apply for assistance under the Hazard Mitigation Grant Program.

(The following Catalog of Federal Domestic Assistance Numbers (CFDA) are to be used for reporting and drawing funds: 97.030, Community Disaster Loans; 97.031, Cora Brown Fund Program; 97.032, Crisis Counseling; 97.033, Disaster Legal Services Program; 97.034, Disaster Unemployment Assistance (DUA); 97.046, Fire Management Assistance; 97.048, Individual and Household Housing; 97.049, Individual and Household Disaster Housing Operations; 97.050, Individual and Household Program—Other Needs; 97.036, Public Assistance Grants; 97.039, Hazard Mitigation Grant Program.)

R. David Paulison,

Under Secretary for Federal Emergency Management and Director of FEMA.

[FR Doc. E6–11516 Filed 7–19–06; 8:45 am]

BILLING CODE 9110–10–P

DEPARTMENT OF THE INTERIOR

Bureau of Land Management

[MT–921–06–1320–EL–P; MTM 95732]

Notice of Invitation—Coal Exploration License Application MTM 95732

AGENCY: Bureau of Land Management, Interior.

ACTION: Notice of Invitation Coal Exploration License Application MTM 95732.

SUMMARY: Pursuant to section 2(b) of the Mineral Leasing Act of 1920, as amended by section 4 of the Federal Coal Leasing Amendments Act of 1976, 90 Stat. 1083, 30 U.S.C. 201 (b), and to the regulations adopted as 43 CFR 3410, interested parties are hereby invited to participate with Spring Creek Coal Company on a pro rata cost sharing basis in its program for the exploration of coal deposits owned by the United States of America in lands located in Big Horn County, Montana, encompassing 6,051.92 acres.

FOR FURTHER INFORMATION CONTACT: Robert Giovanini, Mining Engineer, or Connie Schaff, Land Law Examiner, Branch of Solid Minerals (MT–921), Bureau of Land Management (BLM), Montana State Office, Billings, Montana 59101–4669, telephone (406) 896–5084 or (406) 896–5060, respectively.

SUPPLEMENTARY INFORMATION: The lands to be explored for coal deposits are described as follows:

T.8 S., R.39 E., P.M.M.
- Sec. 4: Lots 1 through 24
- Sec. 5: Lots 1 through 24
- Sec. 8: Lot 1
- Sec. 14: S½NW¼NW¼, N½SW¼NW¼
- Sec. 15: S½NE¼NE¼, N½SE¼NE¼
- Sec. 20: E½
- Sec. 21: S½N½, NW¼NW¼, S½
- Sec. 22: NE¼NW¼, S½NW¼, N½N½SW¼, SW¼NW¼SW¼, SE¼NE¼SW¼, SW¼SW¼
- Sec. 28: N½
- Sec. 35: S½

T.9 S., R.39 E., P.M.M.
- Sec. 1: Lots 1 through 4, W½E½, W½
- Sec. 2: All

T.8 S., R.40 E., P.M.M.
- Sec. 31: Lots 1 through 4, SE¼NW¼, E½SW¼

T.9 S., R.40 E., P.M.M.
- Sec. 5: Lots 3 through 4, S½NW¼, SW¼
- Sec. 6: Lots 1 through 7, S½NE¼, SE¼NW¼, E½SW¼, SE¼

Any party electing to participate in this exploration program must send written notice to both the State Director, BLM, 5001 Southgate Drive, Billings, Montana 59101–4669, and Spring Creek Coal Company, P.O. Box 67, Decker, Montana 59025. Such written notice must refer to serial number MTM 95732 and be received no later than 30 calendar days after publication of this Notice in the **Federal Register** or 10 calendar days after the last publication of this Notice in the *Sheridan Press* newspaper, whichever is later. This Notice will be published once a week for two (2) consecutive weeks in the *Sheridan Press,* Sheridan, Wyoming.

The proposed exploration program is fully described, and will be conducted pursuant to an exploration plan to be approved by the Bureau of Land Management. The exploration plan, as submitted by Spring Creek Coal Company, is available for public inspection at the BLM, 5001 Southgate Drive, Billings, Montana, during regular business hours (9 a.m. to 4 p.m.), Monday through Friday.

Dated: June 7, 2006.

Robert Giovanini,

Acting Chief, Branch of Solid Minerals.

[FR Doc. E6–11468 Filed 7–19–06; 8:45 am]

BILLING CODE 4310–$$–P

DEPARTMENT OF THE INTERIOR

Bureau of Land Management

[WY–040–06–1610–DT]

Notice of Availability of the Record of Decision for the Jack Morrow Hills Coordinated Activity Plan and Green River Resource Management Plan Amendment, Wyoming

AGENCY: Bureau of Land Management, Interior.

ACTION: Notice of availability.

SUMMARY: In accordance with the Federal Land Policy and Management Act and the National Environmental Policy Act, the Bureau of Land Management (BLM) announces the availability of the Record of Decision (ROD) for the Jack Morrow Hills Coordinated Activity Plan (CAP) and Green River Resource Management Plan (RMP) Amendment. The ROD documents the BLM's decision to approve a land use plan amendment that addresses approximately 585,000 acres of public land located in Sweetwater, Sublette, and Fremont counties in southwestern Wyoming. The JMH CAP/Green River RMP Amendment contains land-use plan decisions that supersede previous land-use planning decisions made in the Green River RMP and completes decisions deferred in the Green River RMP. The CAP/ROD went into effect on the date the Wyoming State Director signed the ROD. Publication of this NOA today announces and commences the 30-day appeal period for a project implementation included in the ROD.

ADDRESSES: The ROD will be available electronically on the following Web site: *http://www.wy.blm.gov/jmhcap.*

Copies of the Jack Morrow Hills CAP/ROD are available for public inspection at the following BLM office locations:

- Bureau of Land Management, Wyoming State Office
- 5353 Yellowstone Road, Cheyenne, Wyoming 82003.
- Bureau of Land Management, Rock Springs Field Office,
- 280 Highway 191 North, Rock Springs, Wyoming 82901.

To request a copy of the ROD, please write or telephone the BLM contacts listed below.

FOR FURTHER INFORMATION CONTACT: Michael R. Holbert, Field Manager, or Renee Dana, Jack Morrow Hills CAP Team Leader, Bureau of Land Management, Rock Springs Field Office, 280 Highway 191 North, Rock Springs, Wyoming 82901. Requests for a copy of the ROD may be sent electronically to: *rock_springs_wymail@blm.gov* with ''JMH CAP'' in the subject line. Mr. Holbert and Ms. Dana may be reached at (307) 352–0256.

SUPPLEMENTARY INFORMATION: The Jack Morrow Hills CAP/ROD was developed with broad public participation through a 4-year collaborative planning process. The Jack Morrow Hills CAP/ROD is designed to achieve or maintain desired future conditions developed through the planning process. To meet the desired resource conditions, it includes a series of management actions for resources in the area including upland and riparian vegetation, wildlife habitats, heritage and visual resources, air quality, sensitive species, special management areas, livestock grazing, minerals including oil and gas, and recreation.

In response to the 30 day protest period that ended on August 16, 2004, a total of 1,011 protests were received by BLM. The BLM reviewed and responded to all submittals. The ROD includes a decision regarding the implementation of the project that may be appealed in accordance with 43 CFR part 4. The 30-day appeal period will start on the date this Notice of Availability is published in the **Federal Register**.

The JMH CAP and ROD modify existing special management areas and establish new ones. The JMH planning area includes five Areas of Critical Environmental Concern (ACECs) previously designated under the Green River RMP. Four of the designated five ACECs remain unchanged. The fifth, Steamboat Mountain ACEC, has been expanded by about 4,000 acres and includes the Indian Gap historic trail and key habitats types such as the rare sagebrush/scurfpea vegetation type.

To protect important scientific values, the West Sand Dunes Archaeological District has been established as a new management area. So that the BLM may mange a portion of the public lands with important Native American cultural values, important watershed values, unique wildlife habitat, and feature crucial and overlapping big game habitat the Steamboat Mountain Management Area has been established.

The Jack Morrow Hills CAP is essentially the same as the Proposed Plan in the Jack Morrow Hills CAP/FEIS published in July 14, 2004 (69 FR 42201). No inconsistencies with State or local plans, policies, or programs were identified during the Governor's consistency review of the CAP/FEIS. As a result, only editorial modifications were made in the JMH CAP. These modifications correct and clarify errors that were noted during review of the CAP/FEIS and provide further clarification for some of the decisions.

Dated: March 28, 2006.

Walter E. George,

Acting State Director.

[FR Doc. E6–11590 Filed 7–19–06; 8:45 am]

BILLING CODE 4310–22–P

DEPARTMENT OF THE INTERIOR

National Park Service

Abbreviated Final Environmental Impact Statement and General Management Plan; Minidoka Internment National Monument; Jerome County, ID; Notice of Availability

Summary: Pursuant to section 102(2)(C) of the National Environmental Policy Act of 1969 (Pub. L. 91–190, as amended), and the Council on Environmental Quality Regulations (40 CFR part 1500–1508), the National Park Service (NPS), Department of the Interior, has prepared an abbreviated final environmental impact statement (FEIS) for the proposed General Management Plan (GMP) for Minidoka Internment National Monument located in southern Idaho. This FEIS describes and analyzes four GMP alternatives that respond to both NPS planning requirements and to the public's concerns and issues, identified during the extensive scoping and public involvement process. Each alternative presents management strategies for resource protection and preservation, education and interpretation, visitor use and facilities, land protection and boundaries, and long-term operations and management of the national monument. The potential environmental consequences of all the alternatives, and mitigation strategies, are identified and analyzed in the FEIS. In addition to a ''no-action'' alternative, an ''environmentally preferred'' alternative is identified.

Background: A Notice of Intent formally initiating the conservation planning and environmental impact analysis process was published in the **Federal Register** on April 24, 2002. Early public involvement methods included news releases, public meetings and workshops, presentations and meetings with interested publics, newsletter mailings, and Web site postings. This strong public outreach was deemed necessary for successful planning, given the nature and sensitivity of the national monument's history, the speed in which the national monument was established, as well as its remote location.

Preceding the formal planning process, NPS staff conducted informational meetings about the national monument with Japanese American organizations, community organizations, various governmental entities, potential stakeholder groups, and individuals during the spring, summer and early fall of 2002. Approximately 50 meetings were held in Idaho, Washington, Oregon, and Alaska during this time, and approximately 2,000 people were contacted. The purpose of these initial meetings was to provide information about the establishment of Minidoka Internment National Monument as a new unit of the National Park System and to help characterize the scale and extent of the conservation planning process.

The NPS encouraged public involvement during three phases of the EIS process. The initial scoping phase was intended to elicit issues, concerns, and suggestions deemed necessary to address during the overall planning. Nine public workshops were held in Idaho, Washington, and Oregon in November 2002 (250 people provided comments in workshops, and another 225 people provided written comments). In the second phase the NPS engaged the public in developing preliminary alternatives; these alternatives were intended to address the specific issues and concerns that surfaced during the public scoping. Eleven public workshops were held in Idaho, Washington, and Oregon in July and August 2003 (215 people provided comments in the workshops, and another 50 people provided written comments). The third phase of involvement afforded the opportunity for public review of the Draft EIS/GMP, which was released on June 21, 2005. Government entities and the public were invited to submit comments by regular mail, e-mail, fax, and online. In addition, the NPS held ten public meetings in Idaho, Washington, Oregon, and California in July and August 2005 to provide further opportunity to learn about the proposed plan and to offer comments; over 200 people attended these meetings. During the formal public comment period, which closed on September 19, 2005, the NPS received comments from over 365 individuals and organizations, including 150 written responses (all substantive comments, and responses, are documented in the abbreviated Final EIS).

Throughout the planning process, the public's comments and recommendations have provided the foundation for the new GMP, represented in the national monument's purpose, significance, interpretive themes, alternatives, and particularly as incorporated in the proposed action.

Proposed Plan and Alternatives: Alternative A is the ''no-action'' alternative and would continue current management practices, maintaining general management guidance for incremental and minimal changes in park operations, staffing, visitor services, and facilities to accommodate visitors. While the historic resources of the site would continue to be protected, only minor additional site work would be anticipated. The ''no-action'' alternative is the baseline for evaluating and comparing the changes and impacts of the three ''action'' alternatives.

Alternative B emphasizes the development and extensive use of outreach and partnerships to assist NPS staff in telling the Minidoka story to the American people. Off-site visitor education and interpretation would be conducted through diverse comprehensive programs developed in cooperation with partners, including school districts, museums, and educational and legacy organizations and institutions. Alternative B would focus on identifying off-site facilities for education and interpretation with minimal new development at the national monument site. Historic structures would be adaptively reused for visitor and monument functions and for minimal administrative and operational needs. Key historic features would be delineated, restored, or rehabilitated. On-site education and interpretation would be accomplished through a range of self-exploratory visitor experiences.

Alternative C, the NPS's proposed action, emphasizes on-site education and interpretation and the extensive treatment and use of cultural resources in telling the Minidoka story. On-site education and interpretation would be accomplished through a wide range of visitor experiences, including immersion into the historic scene, interaction with a variety of educational and interpretive media and personal services, and participation in creative and self-directed activities. Off-site visitor education and interpretation would be conducted through diverse programs developed in cooperation with partners, including school districts, museums, and educational and legacy organizations and institutions.

The proposed plan would use various preservation techniques to protect and enhance historic resources, such as delineation, stabilization, restoration, rehabilitation, and limited reconstruction. These historic resources would be used for interpretive purposes to accurately and authentically convey the history and significance of the national monument. The establishment of one complete barracks block exhibit in its original location and configuration would be the cornerstone of interpretive services and facilities at the national monument, essential for understanding and appreciation of the incarceration experience and the significance of the national monument. A visitor contact facility and maintenance area would be developed by adaptively reusing existing historic buildings. There would be minimal new development. Alternative C is also the ''environmentally preferred'' alternative.

The proposed plan would require congressional legislation to authorize a boundary adjustment to include areas where barracks historically stood in order to reestablish a complete residential block in an original historic location. Additionally, the NPS would request congressional legislation to transfer the historic Minidoka Relocation Center landfill, located 1 mile north of the national monument, from the BLM to the NPS. Alternative C recommends a name change to Minidoka National Historic Site, to be more reflective of its historic value.

Alternative D identifies several actions that would focus on education and interpretation on-site, specifically through the development of new visitor facilities. The east end site would be used to develop new facilities and to provide space for a new visitor center, education and research functions, along with a new Issei memorial and garden. On-site education and interpretation would be accomplished through a wide range of visitor experiences, including interaction with a variety of educational and interpretive media, participation in creative and self-guided activities, and limited access of the historic scene. Visitor education programs, adaptive reuse of historic structures for park use, and the establishment of formal

partnerships for education and outreach purposes would complement the new construction. Alternative D would focus on sound cultural resource management through preservation, restoration, rehabilitation, and reconstruction of certain historic features. Several actions would provide for the protection and enhancement of natural and scenic resources. Other actions would establish administrative and operational capabilities in terms of facilities and staffing. Most national monument staff activities would be on-site to manage resources and provide for visitor understanding and appreciation of the national monument. However, some off-site educational programs would complement the on-site programs through partnerships.

Copies: The Abbreviated Final EIS/GMP is now available. This document's abbreviated format requires that the material presented therein be integrated with the Draft EIS to fully describe the proposed GMP, potential environmental impacts, and public comments that have been received and evaluated. Interested persons and organizations wishing to express any concerns or provide relevant information may obtain the Abbreviated Final EIS/GMP by contacting the Superintendent, Minidoka Internment National Monument, P.O. Box 570, Hagerman, Idaho 83332–0570, or via telephone at (208) 837–4793 (copies of the Draft EIS are also available, if needed). This document may also be reviewed at area libraries, or obtained electronically via the following Web site at: *http://parkplanning.nps.gov/miin*. Please note that names and addresses of all respondents will become part of the public record. It is our practice to make comments, including names, home addresses, home phone numbers, and email addresses of respondents, available for public review. Individual respondents may request that we withhold their names and/or home addresses, etc., but if you wish us to consider withholding this information you must state this prominently at the beginning of your comments. In addition, you must present a rationale for withholding this information. This rationale must demonstrate that disclosure would constitute a clearly unwarranted invasion of privacy. Unsupported assertions will not meet this burden. In the absence of exceptional, documentable circumstances, this information will be released. We will always make submissions from organizations or businesses, and from individuals identifying themselves as representatives of or officials of organizations or businesses, available for public inspection in their entirety.

Decision Process: Following release of the Abbreviated Final GMP/EIS, a Record of Decision will be prepared and approved not sooner than 30 days after the EPA has published its notice of filing of the document in the **Federal Register**. A notice of the approved GMP would be similarly published. As a delegated EIS, the official responsible for the final decision is the Regional Director, Pacific West Region, National Park Service. Subsequently, the official responsible for implementing the approved GMP would be the Superintendent, Minidoka Internment National Monument.

Dated: July 12, 2006.

Jonathan B. Jarvis,

Regional Director, Pacific West Region.

[FR Doc. E6–11520 Filed 7–19–06; 8:45 am]

BILLING CODE 4312–DC–P

DEPARTMENT OF THE INTERIOR

Bureau of Reclamation

Milltown Hill Project, Douglas County, OR

AGENCY: Bureau of Reclamation, Interior.

ACTION: Notice of Intent to Prepare a Supplement to the Final Environmental Impact Statement.

SUMMARY: Pursuant to section 102(2)(C) of the National Environmental Policy Act (NEPA) of 1969, as amended, the Bureau of Reclamation (Reclamation) proposes to prepare a supplement to the Final Environmental Impact Statement (FEIS) for the Milltown Hill Project. Reclamation filed the FEIS for the project with the Environmental Protection Agency on August 14, 1992 and completed a Record of Decision (ROD) on November 7, 1992. The FEIS was prepared in conjunction with Douglas County's (County) application for a Small Reclamation Projects Act loan and grants to develop a dam and reservoir at the Milltown Hill site on Elk Creek above Drain, Oregon. The County's loan and grant application was subsequently approved but the project was never constructed. The County has recently indicated that it wishes to re-activate its Small Reclamation Projects Act loan and grant application. Reclamation believes that due to the time lapse since the FEIS was completed and the ROD was signed, it is appropriate to update the information in the 1992 EIS to determine if it still correctly describes the affected environment and environmental consequences of the project. The proposed action and the no action alternative will be evaluated in the supplement to the FEIS.

ADDRESSES: Bureau of Reclamation, Pacific Northwest Regional Office, 1150 N. Curtis Road, Suite 100, Boise, ID 83706–1234.

FOR FURTHER INFORMATION CONTACT: Anyone interested in more information concerning the EIS, or who has information that may be useful in identifying significant environmental issues, may contact Mr. Robert Hamilton at telephone 208–378–5087, or by e-mail at *Milltownhill@pn.usbr.gov.* TTY users may dial 711 to obtain a toll free TTY replay.

SUPPLEMENTARY INFORMATION: The project consists of a 186 foot high dam and 24,143 acre foot reservoir on Elk Creek, a tributary of the Umpqua River, which would provide regulated flows of water for irrigation of up to 4,661 acres of arable land, storage and distribution of water to the cities of Drain and Yoncalla, and the community of Rice Hill; allow municipal expansion and industrial diversification; provide a reliable source of water for rural domestic use; provide opportunities to improve fish and wildlife habitat; improve water quality; provide new water-related recreational facilities; and provide limited flood control in and near the city of Drain. A portion of the stored water would be released directly into Elk Creek to enhance water quality and anadromous fish habitat, and to meet the out of stream needs of municipal, industrial and agricultural users. The remainder of the stored water would be released into a pipeline distribution system which would improve municipal, industrial and irrigation water supplies to Scotts Valley and Yoncalla Valley, and provide an additional water supply for rural domestic use in these areas.

As indicated above, a FEIS and ROD for the project were completed in 1992. The County's loan application was subsequently approved by the Commissioner of Reclamation and the Secretary of the Interior on May 17, 1994, and May 18, 1994, respectively.

On September 9, 1996, the Umpqua River (UR) cutthroat trout was listed as endangered. On October 23, 1996, Reclamation and the County submitted a biological assessment (BA) to the National Marine Fisheries Service (NMFS) analyzing the effects of the proposed project on the listed and proposed species. On December 18, 1997, NMFS issued its biological opinion under section 7 of the ESA,

stating that the proposed project is likely to jeopardize the continued existence of UR cutthroat trout and result in adverse modification of proposed critical habitat. A reasonable and prudent alternative was identified by NMFS to minimize the take of UR cutthroat trout.

Because of the listing of the UR cutthroat trout Reclamation determined that a supplement to the EIS was necessary. A Notice of Intent to prepare a supplement to the EIS was published in the **Federal Register** (62 FR 67890, December 30, 1997). A subsequent notice cancelled the Supplement (63 FR 52286, September 30, 1998) when the County suspended its plans to develop the project because, at that time, there was no process for obtaining a fish passage waiver from the State of Oregon.

Following a scientific review of the coastal cutthroat populations in California, Washington and Oregon, the U.S. Fish and Wildlife Service published a final rule in the **Federal Register** (65 FR 24420, April 26, 2000) delisting the UR cutthroat trout. The Umpqua River Ecologically Significant Unit (ESU) of the coastal cutthroat trout was removed from the List of Endangered and Threatened Wildlife because of a determination that the population, formerly identified as an ESU of the species, is part of a larger population segment that previously was determined to be neither endangered nor threatened as defined by the Endangered Species Act. Critical Habitat designations for this population were also removed.

A scoping letter to request assistance in identifying any new information or effects that should be considered in he supplemental EIS will be prepared early this summer and sent to a list of previously interested parties. Please contact Robert Hamilton at the address given in the **ADDRESSES** section of this notice, or via e-mail at *Milltownhill@pn.usbr.gov* if you wish to receive a copy of the scoping letter. No scoping meetings are planned at this time.

Reclamation welcomes written comments related to the environmental effects of the proposed project. Reclamation's practice is to make comments, including names and home addresses of respondents, available for public review. Individual respondents may request that we withhold their home address from public disclosure, which we will honor to the extent allowable by law. There may be other circumstances in which we would withhold a respondent's identity from public disclosure, as allowable by law. If you wish us to withhold your name and/or address, you must state this prominently at the beginning of your comment. We will make all submissions from organizations or businesses, and from individuals identifying themselves as representatives or officials of organizations or businesses, available for public disclosure in their entirety.

Dated: July 14, 2006.

J. William McDonald,

Regional Director, Pacific Northwest Region.

[FR Doc. 06–6368 Filed 7–19–06; 8:45 am]

BILLING CODE 4310–MN–M

DEPARTMENT OF JUSTICE

Antitrust Division

United States v. Inco Limited and Falconbridge Limited—Proposed Final Judgment and Competitive Impact Statement

Notice is hereby given pursuant to the Antitrust Procedures and Penalties Act, 15 U.S.C. 16(b) through (h), that a Complaint, proposed Final Judgment, Hold Separate Stipulation and Order, and Competitive Impact Statement have been filed with the United States District Court for the District of Columbia in *United States* v. *Inco Limited and Falconbridge Limited,* Civil Action No. 1:06CV01151. On June 23, 2006, the United States filed a Complaint which sought to enjoin Inco Limited (''Inco'') from acquiring Falconbridge Limited (''Falconbridge''). The Complaint alleged that Inco's acquisition of Falconbridge would substantially lessen competition in the development, manufacture, and sale of High-Purity Nickel in violation of Section 7 of the Clayton Act, as amended, 15 U.S.C. 18, throughout the United States. The proposed Final Judgment, filed June 26, 2006, requires defendants to divest Falconbridge's Nikkelverk Refinery located in Kristiansand, Norway, and certain marketing offices and related assets, to preserve competition in the sale of High-Purity Nickel. A Hold Separate Stipulation and Order, entered by the Court on June 28, 2006, requires defendants to maintain, prior to divestiture, the competitive independence and economic viability of the assets subject to divestiture under the proposed Final Judgment. A Competitive Impact Statement filed by the United States describes the Complaint, proposed Final Judgment, Hold Separate Stipulation and Order, and the remedies available to private litigants who may have been injured by the alleged violations.

Copies of the Complaint, proposed Final Judgment, Hold Separate Stipulation and Order, and Competitive Impact Statement are available for inspection at the United States Department of Justice, Antitrust Division, 325 Seventh Street, NW., Room 215, Washington, DC 20530, (telephone: 202–514–2481), and at the Clerk's Office of the United States District Court for the District of Columbia, Washington, DC. Copies of these materials may be obtained upon request and payment of a copying fee.

Public comment is invited within the statutory 60-day comment period. Such comments and responses thereto will be published in the **Federal Register** and filed with the Court. Comments should be directed to Maribeth Petrizzi, Chief, Litigation II Section, Antitrust Division, U.S. Department of Justice, 1401 H Street, NW., Suite 3000, Washington, DC 20530, (telephone: 202–307–0924).

J. Robert Kramer II,

Director of Operations.

United States District Court for the District of Columbia

United States of America Department of Justice, Antitrust Division, 1401 H Street, NW., Suite 3000, Washington, DC 20530, Plaintiff v. INCO Limited, 145 King Street West, Suite 1500, Toronto, ON, Canada M5H 4B7, and Falconbridge Limited, 207 Queens Quay West Suite 800 Toronto, ON, Canada M5J lA7, Defendants.

Case Number: 1:06CV01151, *Judge:* Rosemary M. Collyer, *Deck Type:* Antitrust, *Date Stamp:* 06/23/2006.

Complaint

Plaintiff United States of America (''United States''), acting under the direction of the Attorney General of the United States, brings this civil antitrust action to obtain equitable relief against defendants, Inco Limited (''Inco'') and Falconbridge Limited (''Falconbridge''). Plaintiff complains and alleges as follows:

I. Introduction

1. The United States brings this action for injunctive relief under Section 15 of the Clayton Act, as amended, 15 U.S.C. 25, to prevent and restrain Inco and Falconbridge from violating Section 7 of the Clayton Act, 15 U.S.C. 18. The United States seeks to prevent the proposed acquisition of Falconbridge by Inco because that acquisition would substantially lessen competition in the development, manufacture, and sale of refined nickel of sufficient purity and chemical composition that it can be utilized in super alloys used for safety-critical applications (hereinafter ''High-Purity Nickel''). The use of High-Purity Nickel is particularly important in making such

products as the rotating parts of jet engines, which are often called ''safety-critial parts.''

2. Inco and Falconbridge are two of the world's leading producers of refined nickel, a metallic element that is valued for its resistance to corrosion, stress, and high temperatures. Inco and Falconbridge are also by far the world's two largest producers of High-Purity Nickel.

3. High-Purity Nickel is primarily distinguished from other refined nickel because it contains lower amounts of certain impurities commonly referred to as trace elements. In safety-critical parts, for example, the presence of trace elements can make the parts less resistant to the extreme stresses and temperatures under which they operate and may eventually lead to engine failure.

4. Inco's proposed acquisition of Falconbridge would reduce the number of significant worldwide High-Purity Nickel suppliers from three to two and create a company with over 80 percent of the world's sales of High-Purity Nickel.

5. Unless the proposed acquisition is enjoined, competition in High-Purity Nickel that has benefitted customers will be substantially reduced. The proposed acquisition would likely result in higher prices, lower quality, less innovation, and less favorable delivery terms in the High-Purity Nickel market.

II. The Defendants

6. Defendant Inco is a Canadian corporation with its principal place of business in Toronto, Ontario, Canada. Inco's High-Purity Nickel sales in the United States are made through its wholly-owned subsidiary, International Nickel, Inc. (''INI''). INI is a Delaware corporation with its principal place of business in Saddlebrook, New Jersey.

7. Inco is one of the largest mining companies in the world. Inco mines, processes, and refines various minerals, including nickel. Inco also produces cobalt and platinum group metals (''PGMs'') as by-products of its nickel production. In 2005, Inco reported total sales of approximately $4.7 billion.

8. Inco's main nickel mining, processing, and refining operations are located in Canada, although it owns mines and processing facilities worldwide. Inco's High-Purity Nickel refining operations are located in Ontario, Canada, and Wales, United Kingdom. Inco's High-Purity Nickel is shipped to customers worldwide, including the United States.

9. Defendant Falconbridge is a Canadian corporation with its principal place of business in Toronto, Ontario, Canada. Falconbridge's High-Purity Nickel sales in the United States are made through its wholly-owned subsidiary, Falconbridge U.S., Inc. (''FUS''). FUS is a Pennsylvania corporation with its principal place of business in Pittsburgh, Pennsylvania.

10. Like Inco, Falconbridge is one of the world's largest mining companies. Falconbridge mines, processes, and refines various minerals, including nickel and copper. Falconbridge also produces cobalt and PGMs as by-products of both its nickel and copper production. In 2005, Falconbridge reported total sales of approximately $7.7 billion.

11. Falconbridge's primary nickel mining and processing facilities are located in Ontario, Canada, although it also has such facilities worldwide. Falconbridge's only High-Purity Nickel refining operation is located in Kristiansand, Norway. Falconbridge's High-Purity Nickel is shipped to customers worldwide, including the United States.

III. Jurisdiction and Venue

12. Plaintiff United States brings this action against defendants Inco and Falconbridge under Section 15 of the Clayton Act, as amended, 15 U.S.C. 25, to prevent and restrain the violation by defendants of Section 7 of the Clayton Act, 15 U.S.C. 18.

13. Defendants produce and sell High-Purity Nickel in the flow of interstate commerce. Their activities in developing, producing, and selling High-Purity Nickel substantially affect interstate commerce. This Court has subject matter jurisdiction over this action pursuant to Section 12 of the Clayton Act, 15 U.S.C. 22; and 28 U.S.C. 1331, 1337(a), and 1345.

14. Venue is proper in this District pursuant to 28 U.S.C. 1391(d). Inco and Falconbridge have consented to venue and personal jurisdiction in this judicial district.

IV. The Proposed Transaction

15. Pursuant to a Support Agreement dated October 10, 2005, Inco stated that it intended to offer to purchase all of the common shares of Falconbridge not currently owned by it. Also pursuant to that Support Agreement, Falconbridge's Board of Directors stated that it had determined that it is in the best interests of Falconbridge to support the offer, recommend acceptance of Inco's offer to holders of the common shares of Falconbridge, and use its reasonable best efforts to permit Inco's offer to be successful, on the terms and conditions contained in the Support Agreement.

16. On October 24, 2005, Inco made a forinal offer to purchase all of the outstanding common shares of Falconbridge, a transaction now valued at over $15 billion dollars. Inco's offer to purchase, originally open for acceptance until December 23, 2005, has been extended until June 30, 2006.

V. Reduced Competition in the High-Purity Nickel Market

A. The Relevant Product Market

17. Nickel is a metallic element that is particularly resistant to high temperatures, high stresses, and corrosion. Nickel is often combined with other materials to form alloys with particular performance characteristics. These performance characteristics depend on the amount of nickel and other elements contained in the particular alloy.

18. As a general proposition, as the amount of nickel in the alloy increases, the more resistant the alloy is to heat and stress. The most common alloy using nickel is stainless steel, which contains, on average, approximately 10 percent nickel and is used in applications demanding the least amount of the resistence to heat and stress that nickel provides.

19. At the other end of the spectrum are so-called super alloys. Super alloys generally contain between 50 and 70 percent nickel, as well as specific amounts of other elements, including iron, cobalt, and chromium, that combine to give the alloy specific performance characteristics. Super alloys are primarily used in chemical processing plants, medical applications, industrial power generation, and various aerospace applications.

20. Certain products made from super alloys, such as the rotating parts of jet engines, are considered safety-critical parts. For these parts, it is vital that, in addition to containing the proper amount of nickel, the super alloy be as free as possible from certain trace elements that could compromise the performance of the product and result in serious problems, like engine failure. For example, designers of jet engines severely restrict the maximum amounts of trace elements that can be contained in superalloys used to produce moving parts for jet engines.

21. The nickel that meets demanding safety-critical requirements is High-Purity Nickel. High-Purity Nickel is refined nickel of sufficient purity and chemical composition that it can be utilized in super alloys used for safety-critical applications. Only a small portion of the refined nickel produced in the world has sufficient metal content and purity to qualify as High-Purity Nickel.

22. Super alloy makers must use High-Purity Nickel to meet the specifications for safety-critical parts. Super alloy makers do not have the in-house capability to remove sufficient quantities of undesirable trace elements from non-High-Purity Nickel to permit them to produce alloys that meet the specifications for safety-critical parts.

23. A small but significant post-acquisition increase in the price of High-Purity Nickel would not cause the purchasers of safety-critical parts to substitute non-High-Purity Nickel or elements other than nickel so as to make such a price increase unprofitable.

24. Accordingly, the development, manufacture, and sale of High-Purity Nickel is a line of commerce and a relevant product market for purposes of analyzing this acquisition under Section 7 of the Clayton Act.

B. The Relevant Geographic Market

25. All of the High-Purity Nickel sold in the world is mined, processed, and refined outside of the United States. Both Inco and Falconbridge sell High-Purity Nickel throughout the world. Both companies import High-Purity Nickel into the United States and sell that nickel to customers located throughout the United States.

26. Accordingly, the world is the relevant geographic market within the meaning of Section 7 of the Clayton Act.

C. Concentration

27. The market for High-Purity Nickel is highly concentrated. Inco and Falconbridge are by far the two largest producers of High-Purity Nickel sold worldwide and in the United States.

28. Aside from Inco and Falconbridge, only three companies have demonstrated any

ability to produce High-Purity Nickel. One of these companies consistently produces High-Purity Nickel, but its available capacity is substantially less than that of either Inco or Falconbridge and it cannot economically increase its capacity. The other two companies are not substantial competitors in the High-Purity Nickel market. While both have substantial capacity to make non-High-Purity Nickel and both have produced small amounts of High-Purity Nickel, their ability to make High-Purity Nickel, and to make it on a consistent basis, is very limited.

29. Inco accounts for at least 40 percent of the worldwide sales of High-Purity Nickel. Similarly, Falconbridge accounts for at least 40 percent of the worldwide sales of High-Purity Nickel.

30. The market for High-Purity Nickel would become substantially more concentrated if Inco acquires Falconbridge. Combined, Inco and Falconbridge would account for over 80 percent of worldwide High-Purity Nickel sales. Using a measure of market concentration called the Herfindahl-Hirschman Index (''HHI'') (defined and explained in Appendix A), the proposed transaction will increase the HHI in the market for High-Purity Nickel by approximately 3,200 points to a post-acquisition level of approximately 6,800, well in excess of levels that raise significant antitrust concerns.

D. Anticompetitive Effects

1. The Proposed Transaction Will Harm Competition in the Market for High-Purity Nickel.

31. High-Purity Nickel customers generally view Inco's and Falconbridge's High-Purity Nickel as their only available options and do not view the products of other producers as viable alternatives for High-Purity Nickel due to concerns relating to the other producers' quality, capacity, and reliability.

32. The vigorous and aggressive competition between Inco and Falconbridge in the production and sale of High-Purity Nickel has benefitted customers. Inco and Falconbridge have competed directly in terms of price, quality, innovation, and delivery terms.

33. The proposed acquisition will eliminate the competition between Inco and Falconbridge, reduce the number of significant suppliers of High-Purity Nickel from three to two, and substantially increase the likelihood that Inco will unilaterally increase the price of High-Purity Nickel to a significant number of customers.

34. Inco and Falconbridge have the ability to increase prices to certain customers of High-Purity Nickel. Some customers must purchase High-Purity Nickel because they use it in super alloys used for safety-critical applications. These customers do not have the ability to substitute any other product for High-Purity Nickel. Inco and Falconbridge are able to determine their High-Purity Nickel customers' end-uses and identify which customers are purchasing High-Purity Nickel specifically for super alloys used for safety-critical applications.

35. Inco and Falconbridge can, therefore, charge customers that are purchasing High-Purity Nickel for super alloys used for safety-critical applications a higher price than customers that are purchasing High-Purity Nickel for other uses. Without the competitive constraint of head-to-head competition between Inco and Falconbridge, Inco post-merger will have a greater ability to exercise market-power by raising prices to companies that purchase High-Purity Nickel for super alloys used for safety-critical applications.

36. The other High-Purity Nickel producers do not have the incentive or the ability, individually or collectively, to effectively constrain a unilateral exercise of market power by Inco after the acquisition.

37. The transaction will therefore substantially lessen competition in the market for High-Purity Nickel, which is likely to lead to higher prices, lower quality, less innovation, and less favorable delivery terms for the ultimate consumers of such products, in violation of Section 7 of the Clayton Act.

2. Entry Is Not Likely To Deter the Exercise of Market Power

38. Successful entry or expansion into the development, manufacture, and sale of High-Purity Nickel is difficult, time-consuming, and costly. Companies not currently producing nickel of any kind would require roughly three to five years and the expenditure of at least $100 million to build a refinery to produce a finished nickel product. In addition to building the refinery, the new entrant, if not vertically integrated, would also have to secure nickel feedstock to refine.

39. The cost of entering the High-Purity Nickel market is even greater than the cost of entering the refined nickel market generally. A new entrant into the High-Purity Nickel market would have to invest in additional equipment and processes to enable it to extract sufficient undesirable trace elements to produce the nickel required by makers of super alloys used for safety-critical applications. Further, if not vertically integrated, a new entrant would have to secure nickel feedstock of sufficient quality to be able to refine High-Purity Nickel.

40. Even companies that currently produce non-High-Purity Nickel would require an investment of millions of dollars and several years to modify their facilities and processes to be capable of producing High-Purity Nickel. These companies would not invest the substantial time and money necessary to modify their facilities and processes to produce High-Purity Nickel in response to a small but significant increase in the price of High-Purity Nickel.

41. Moreover, it is not sufficient simply to be able to produce High-Purity Nickel. A new entrant in the High-Purity Nickel market would have to be able to produce High-Purity Nickel in sufficient quantities with sufficiently consistent purity levels that customers could depend on it to provide the amounts of High-Purity Nickel needed at the appropriate time. Achieving such capability could require a substantial investment in time and money by a company seeking to enter the High-Purity Nickel market.

42. Therefore, entry or expansion by any other firm into the High-Purity Nickel market would not be timely, likely, or sufficient to defeat an anticompetitive price increase in the event that Inco acquires Falconbridge.

VI. The Proposed Acquisition Violates Section 7 of the Clayton Act

43. The proposed acquisition of Falconbridge by Inco would substantially lessen competition and tend to create a monopoly in interstate trade and commerce in violation of Section 7 of the Clayton Act, 15 U.S.C. 18.

44. Unless restrained, the transaction will have the following anticompetitive effects, among others:

a. Actual and potential competition in the world market, including the United States, between Inco and Falconbridge in the development, manufacture, and sale of High-Purity Nickel will be eliminated;

b. Competition generally in the development, manufacture, and sale of High-Purity Nickel will be substantially lessened; and

c. Prices for High-Purity Nickel will likely increase, the quality of High-Purity Nickel will likely decline, innovation relating to High-Purity Nickel will likely decline, and the delivery terms currently offered in the High-Purity Nickel market will likely become less favorable to the customer.

VII. Request for Relief

45. Plaintiff requests that:

a. Inco's proposed acquisition of Falconbridge be adjudged and decreed to be unlawful and in violation of Section 7 of the Clayton Act, 15 U.S.C. 18;

b. Defendants and all persons acting on their behalf be permanently enjoined and restrained from consummating the proposed acquisition or from entering into or carrying out any contract, agreement, plan, or understanding, the effect of which would be to combine Inco with the operations of Falconbridge;

c. Plaintiff be awarded its costs for this action; and

d. Plaintiff receive such other and further relief as the Court deems just and proper.

Dated: June 23, 2006.

Respectfully submitted.

For Plaintiff United States of America:

Thomas O. Barnett,
Assistant Attorney General, D.C. Bar #426840.

David L. Meyer,
Deputy Assistant Attorney General, for Civil Enforcement, D.C. Bar #414420.

J. Robert Kramer II,
Director of Operations and Civil Enforcement.

Maribeth Petrizzi,
Chief, Litigation II Section, D.C. Bar #435204.

Karen Y. Phillips-Savoy,
Dando B. Cellini,
Jillian E. Charles (D.C. Bar #459052),
James K. Foster, Jr.,
Christine A. Hill (D.C. Bar #461048/inactive),
Tara M. Shinnick,
Robert W. Wilder,
Attorneys, U.S. Department of Justice, Antitrust Division, Litigation II Section, 1401 H Street. NW., Suite 3000, Washington, DC 20530, Tel: (202) 307–0924.

Appendix A—Herfindahl-Hirschman Index Calculations

''HHI'' means the Herfindahl-Hirschman Index, a commonly accepted measure of market concentration. It is calculated by squaring the market share of each firm competing in the market and then summing the resulting numbers. For example, for a market consisting of four firms with shares of thirty, thirty, twenty, and twenty percent, the HHI is 2600 ($30^2 + 30^2 + 20^2 + 20^2 = 2600$). The HHI takes into a ccount the relative size and distribution of the firms in a market and approaches zero when a market consists of a large number of firms of relatively equal size. The HHI increases both as the number of firms in the market decreases and as the disparity in size between those firms increases.

Markets in which the HHI is between 1000 and 1800 points are considered to be moderately concentrated and those in which the HHI is in excess of 1800 points are considered to be highly concentrated. Transactions that increase the HHI by more than 100 points in highly concentrated markets presumptively raise antitrust concerns under the Horizontal Merger Guidelines issued by the U.S. Department of Justice and the Federal Trade Commission. See Horizontal Merger Guidelines § 1.51.

Final Judgment

Whereas, plaintiff, United States of America, filed its Complaint on June 23, 2006, and plaintiff and defendants, Inco Limited and Falconbridge Limited, by their respective attorneys, have consented to the entry of this Final Judgment without trial or adjudication of any issue of fact or law, and without this Final Judgment constituting any evidence against or admission by any party regarding any issue of fact or law;

And Whereas, defendants agree to be bound by the provisions of this Final Judgment pending its approval by the Court;

And Whereas, the essence of this Final Judgment is the prompt and certain divestiture of certain rights or assets by the defendants to assure that competition is not substantially lessened;

And Whereas, plaintiff requires defendants to make certain divestitures and enter into the Supply Agreement and provide any Alternative Acquirer the Third-Party Feedstock Option for the purpose of remedying the loss of competition alleged in the Complaint;

And Whereas, defendants have represented to the United States that the divestitures, the Supply Agreement, and the Third-Party Feedstock Option required below can and will be made and that defendants will later raise no claim of hardship or difficulty as grounds for asking the Court to modify any of the divestiture provisions contained below;

Now Therefore, before any testimony is taken, without trial or adjudication of any issue of fact or law, and upon consent of the parties, it is *Ordered, Adjudged and Decreed:*

I. Jurisdiction

This Court has jurisdiction over the subject matter of and each of the parties to this action. The Complaint states a claim upon which relief may be granted against defendants under Section 7 of the Clayton Act, as amended, 15 U.S.C. 18.

II. Definitions

As used in this Final Judgment:

A. ''Acquirer'' means LionOre, the entity to whom defendants shall divest the Divested Business.

B. ''Acquirer Shares'' means the issuance to Falconbridge of no more than 19.99 percent or 49,118,057 of the outstanding common shares of the Acquirer at the completion of the purchase and sale of the Divested Business to the Acquirer.

C. ''Acquisition of Falconbridge'' means: (a) the condition that Inco has taken up and paid for such number of Falconbridge common shares, validly deposited and not withdrawn at the expiry time of Inco's Offer to Purchase all of the Outstanding Shares of Falconbridge, dated October 24,2005, as amended, that, together with any Falconbridge common shares directly or indirectly owned by Inco, constitutes at least 50.01% of the Falconbridge common shares on a fully-diluted basis at the expiry time or (b) Inco's acquisition of control of Falconbridge by any other means.

D. ''Alternative Acquirer'' means an Acquirer other than LionOre that is in the metals mining or processing business and is able to supply, on a long-term basis, sufficient Feedstock to assure the United States, in its sole discretion, that the Nikkelverk Refinery will remain an economically viable competitive business.

E. ''Alternative Divested Business'' means Falconbridge Nikkelverk AlS, Falconbridge, U.S., Inc. (''FUS''), Falconbridge Europe S.A. (''FESA''), and Falconbridge (Japan) Limited (''FJKK''), including:

1. All tangible assets used in the development, production, servicing, and sale of the Nikkelverk Refinery Products, including but not limited to the Nikkelverk Refinery; all real property; any facilities used for research, development, and engineering support, and any real property associated with those facilities; manufacturing and sales assets, including capital equipment, vehicles, supplies, personal property, inventory, office furniture, fixed assets and fixtures, materials, on- or off-site warehouses or storage facilities, and other tangible property or improvements; all licenses, permits and authorizations issued by any governmental organization; all contracts, agreements, leases, commitments, and understandings; all customer contracts, lists, accounts, and credit records; and other records relating to the Alternative Divested Business;

2. All intangible assets that have been used exclusively or primarily in the development, production, servicing, and sale of the Nikkelverk Refinery Products, including but not limited to all patents, licenses and sublicenses, intellectual property, trademarks, trade names, service marks, service names (including the product or trade name ''SuperElectro'' or any variation thereof), technical information, computer software and related documentation, know-how, trade secrets, drawings, blueprints, designs, design protocols, specifications for materials, specifications for parts and devices, safety procedures for the handling of materials and substances, quality assurance and control procedures, design tools and simulation capability, and all manuals and technical information provided to the employees, customers, suppliers, agents or licensees of the Alternative Divested Business, provided that with respect to any such intangible assets relating to metal separation or purification processes, at the option of the Alternative Acquirer defendants may retain a non-exclusive, non-transferable, fully paid-up license(s) to or copy of such intangible assets;

3. A non-exclusive, non-transferable, fully paid-up license(s) for the use of the name ''Falconbridge,'' the duration and terms of which shall be negotiated by the defendants and the Alternative Acquirer and limited to the field of use of the Nikkelverk Refinery Products, provided that any such license(s) may be transferable to any future purchaser of the Nikkelverk Refinery;

4. A non-exclusive, non-transferable, fully paid-up license(s) for use of any intangible asset that has been used by both the Alternative Divested Business and any of Falconbridge's non-divested businesses, provided that such license(s) may be transferable to any future purchaser of Nikkelverk Refinery; and

5. All research data concerning historic and current research and development efforts conducted at or for the Alternative Divested Business, including designs of experiments, and the results of unsuccessful designs and experiments.

The term ''Alternative Divested Business'' shall not include tangible or intangible assets exclusively used in, or personnel exclusively responsible for, the production or sale of products other than the Nikkelverk Refinery Products.

F. ''Alternative Supply Agreement'' means an agreement between Inco and the Alternative Acquirer on the terms described in Section V(B) by which Inco commits to supply to the Alternative Acquirer, other than through a New Third-Party Supply Agreement, Feedstock to be used in operating the Nikkelverk Refinery.

G. ''Divested Business'' means Falconbridge Nikkelverk A/S, Falconbridge, U.S., Inc. (''FUS''), Falconbridge Europe S.A. (''FESA''), Falconbridge (Japan) Limited (''FJKK''), and Falconbridge International Limited (''FIL''), including:

1. All tangible assets used in the development, production, servicing, and sale of the Nikkelverk Refinery Products, including but not limited to the Nikkelverk Refinery; all real property; any facilities used for research development, and engineering support, and any real property associated with those facilities; manufacturing and sales assets, including capital equipment, vehicles, supplies, personal property, inventory, office furniture, fixed assets and fixtures, materials, on- or off-site warehouses or storage facilities, and other tangible property or improvements; all licenses, permits and authorizations issued by any governmental organization; all contracts, agreements, leases, commitments, and understandings; all customers contracts, lists, accounts, and credit records; and other records relating to the Divested Business;

2. All intangible assets that have been used exclusively or primarily in the development, production, servicing, and sale of the Nikkelverk Refinery Products, including but not limited to all patents, licenses and sublicenses, intellectual property, trademarks, trade names, service marks, service names (including the product or trade name ''SuperElectro'' or any variation thereof), technical information, computer software and related documentation, know-how, trade secrets, drawings, blueprints, designs, design protocols, specifications for materials, specifications for parts and devices, safety procedures for the handling of materials and substances, quality assurance and control procedures, design tools and simulation capability, and all manuals and technical information provided to the employees, customers, suppliers, agents or licensees of the Divested Business, provided that with respect to any such intangible assets relating to metal separation or purification processes, at the option of the Acquirer defendants may retain a non-exclusive, non-transferable, fully paid-up license(s) to or copy of such intangible assets;

3. A non-exclusive, non-transferable, fully paid-up license(s) for the use of the name ''Falconbridge,'' the duration and terms of which shall be negotiated by the defendants and the Acquirer and limited to the field of use of the Nikkelverk Refinery Products, provided that any such license(s) may be transferable to any future purchaser of the Nikkelverk Refinery;

4. A non-exclusive, non-transferable, fully paid-up license(s) for use of any intangible asset that has been used by both the Divested Business and any of Falconbridge's non-divested businesses, provided that such license(s) may be transferable to any future purchaser of Nikkelverk Refinery; and

5. All research data concerning historic and current research and development efforts conducted at or for the Divested Business, including designs of experiments, and the results of unsuccessful designs and experiments.

The term ''Divested Business'' shall not include tangible or intangible assets exclusively used in, or personnel exclusively responsible for, the production or sale of products other than the Nikkelverk Refinery Products.

H. ''Existing Third-Party Supply Agreements'' means existing agreements between Falconbridge and third parties for the supply of Feedstock for the Nikkelverk Refinery that is produced by persons other than the defendants.

I. ''Falconbridge'' means defendant Falconbridge Limited, a Canadian corporation with its headquarters in Toronto, Canada, its successors and assigns, and its subsidiaries, divisions, groups, affiliates, partnerships, and joint ventures, and their directors, officers, managers, agents, and employees.

J. ''Falconbridge International Limited'' means a corporation organized under the laws of Barbados and a subsidiary of Falconbridge responsible, in part, for the acquisition of Feedstock from third parties.

K. ''Feedstock'' means nickel-in-matte and other products and intermediate compounds constituting refinery feed sources suitable for refining at Nikkelverk Refinery.

L. ''Foreign Competition Clearance'' means an action or inaction by the European Commission that results in the termination of any relevant waiting period, or grant of approval, clearance or consent, that is applicable to the acquisition of Falconbridge by Inco.

M. ''High-Purity Nickel'' means refined nickel of sufficient purity and chemical composition that it can be utilized in super alloys used for safety-critical applications.

N. ''Inco'' means defendant Inco Limited, a Canadian corporation with its headquarters in Toronto, Canada, its successors and assigns, and its subsidiaries, divisions, groups, affiliates, partnerships, and joint ventures, and their directors, officers, managers, agents, and employees.

O. ''LionOre'' means LionOre Mining International Limited, a Canadian corporation with its headquarters in London, England, its successors and assigns, and its subsidiaries, divisions, groups, affiliates, partnerships, and joint ventures, and their directors, officers, managers, agents, and employees.

P. ''New Third-Party Supply Agreement'' means one or more agreements between the defendants and the Alternative Acquirer on the terms described in Section V for the supply to the Nikkelverk Refinery of Feedstock that is produced by persons other than the defendants.

Q. ''Nikkelverk Refinery'' means the nickel, copper, cobalt, and precious metals refinery owned by Falconbridge's subsidiary Falconbridge Nikkelverk A/S and located In Kristiansand, Norway.

R. ''Nikkelverk Refinery Products'' means the finished nickel, copper, cobalt, precious metals, and other products produced at the Nikkelverk Refinery.

S. ''Supply Agreement'' means an agreement between Inco and the Acquirer on the terms described in Section IV by which Inco commits to supply to the Acquirer, other than through a New Third-Party Supply Agreement, Feedstock to be used in operating the Nikkelverk Refinery.

T. ''Third-Party Feedstock Option'' means one or more of the options available to the Alternative Acquirer in Section V(A)(3) to obtain the quantities and quality of Feedstock supplied pursuant to the Existing Third-Party Supply Agreements.

III. Applicability

A. This Final Judgment applies to Inco and Falconbridge, as defined above, and all other persons in active concert or participation with any of them who receive actual notice of this Final Judgment by personal service or otherwise.

B. Defendants shall require, as a condition of the sale or other disposition of all or substantially all of their assets or of lesser business units that include the Divested Business, that the purchaser agrees to be bound by the provisions of this Final Judgment.

IV. Divestiture

A. In the event that Inco acquires any shares pursuant to Inco Limited Offer to Purchase All of the Outstanding Shares of Falconbridge Limited dated October 24, 2005, as amended, defendants are ordered and directed concurrently with Inco's Acquisition of Falconbridge, (1) to divest the Divested Business to the Acquirer in a manner consistent with this Final Judgment, and (2) to enter into the Supply Agreement with the Acquirer. Defendants shall, as soon as possible, but within one business day after the Acquisition of Falconbridge, notify the United States of (1) the effective date of the Acquisition of Falconbridge and (2) the effective date that the Divested Business was divested to the Acquirer.

B. Defendants shall provide the United States and the Acquirer information relating to the personnel employed by the Divested Business or involved exclusively or primarily in research, development, production, operation, and sale of the Nikkelverk Refinery Products or procurement of Feedstock from third parties for the Divested Business, to enable the Acquirer to make offers of employment. Defendants will not interfere with any negotiations by the Acquirer to employ any of the defendants' employees whose responsibilities exclusively or primarily involve the research, development, production, operation, or sale of the products of the Divested Business or procurement of Feedstock from third parties for the Divested Business.

C. Defendants shall permit the Acquirer to have reasonable access to personnel and to make inspections of the physical facilities of the Divested Business; access to any and all environmental, zoning, and other permit documents and information; access to any and all financial, operational, or other documents and information customarily provided as part of a due diligence process; and any documents and information the Acquirer shall consider relevant to any issues relating to the Supply Agreement.

D. Defendants shall warrant to the Acquirer that each asset that was operational as of the date of filing of the Complaint in this matter will be operational on the date of divestiture.

E. Defendants shall enter into the Supply Agreement with the Acquirer to provide Feedstock of the same or substantially the same quality and volume provided by Falconbridge to be used in operating the Nikkelverk Refinery. At the option of the Acquirer, such Supply Agreement may have a term of up to ten (10) years. The terms and conditions of the Supply Agreement must be commercially reasonable and designed to enable the Acquirer to compete effectively in the sale of High-Purity Nickel. The terms and conditions of the Supply Agreement must be approved by the United States in its sole discretion. Inco shall give the United States 30 calendar days notice before exercising any contract right to cancel or terminate the Supply Agreement and before implementing any material change to any term related to the length of the Supply Agreement, the volume and quality of the Feedstock, or the price. In the performance of the Supply Agreement, defendants shall take no action the effect of which is to interfere with or impede the ability of the Acquirer to compete effectively in the sale of High-Purity Nickel.

F. Defendants shall not take any action that will impede in any way the permitting,

operation. or divestiture of the Divested Business.

G. Defendants shall warrant to the Acquirer that there are no material defects in the . environmental, zoning, or other permits pertaining to the operation of the Divested Business, and that following the sale of the Divested Business, defendants will not undertake, directly or indirectly, any challenges to the environmental, zoning, or other permits relating to the operation of the Divested Business.

H. Nothing in this Final Judgment shall be construed to require the Acquirer as a condition of any license granted by or to defendants pursuant to Sections II (G)(2)–(4) to extend to defendants the right to use the Acquirer's improvements to processes used in the production of Nikkelverk Refinery Products.

I. Unless the United States otherwise consents in writing, the divestiture pursuant to Section IV of this Final Judgment shall include the entire Divested Business and the Supply Agreement, and shall be accomplished in such a way as to satisfy the United States, in its sole discretion, that the Divested Business can and will be used by the Acquirer as part of a viable, ongoing business, engaged in producing High-Purity Nickel for sale worldwide, including the United States. The divestiture shall be accomplished so as to satisfy the United States, in its sole discretion, that:

1. the Divested Business will remain viable and the divestiture of the Divested business will remedy the competitive harm alleged in the Complaint; and

2. none of the terms of any agreement between the Acquirer and defendants give defendants the ability unreasonably to raise the Acquirer's costs, to lower the Acquirer's efficiency, or to otherwise interfere in the ability of the Acquirer to compete effectively in the production and sale of High-Purity Nickel.

V. Appointment of Trustee to Effect Divestiture

A. If defendants have not divested the Divested Business as specified in Section IV(A), defendants shall notify the United States of that fact in writing. Upon application of the United States, the Court shall appoint a trustee selected by the United States and approved by the Court (1) to divest the Alternative Divested Business in a manner consistent with this Final Judgment to an Alternative Acquirer acceptable to the United States in its sole discretion, (2) at the option of the Alternative Acquirer, to effectuate the Alternative Supply Agreement between the defendants and the Alternative Acquirer, and (3) except for those Existing Third-Party Supply Agreements under which Feedstocks are contractually obligated to be processed at the Nikkelverk Refinery, to (a) effectuate, at the option of the Alternative Acquirer, the New Third-Party Supply Agreement between the defendants and the Alternative Acquirer, (b) oversee the defendants' best efforts to procure the assignment of the Existing Third-Party Supply Agreements, (c) order the divestiture of Falconbridge International Limited, or (d) some combination of these options, to ensure that the Alternative Acquirer obtains the quantities and quality of Feedstock to be supplied pursuant to the Existing Third-Party Supply Agreements consistent with the remaining term of each of the Existing Third-Party Supply Agreements. In the event the European Commission also requires the divestiture of the same assets, the United States shall consult in good faith with the European Commission to ensure selection of a trustee acceptable to both the United States and the European Commission.

B. At the option of the Alternative Acquirer, defendants shall enter into the Alternative Supply Agreement with the Alternative Acquirer to provide Feedstock of the same or substantially the same quality and volume provided by Falconbridge to be used in operating the Nikkelverk Refinery. At the option of the Alternative Acquirer, such Alternative Supply Agreement may have a term of up to ten (10) years. The terms and conditions of the Alternative Supply Agreement must be commercially reasonable and designed to enable the Alternative Acquirer to compete effectively in the sale of High-Purity Nickel. The terms and conditions of the Alternative Supply Agreement must be approved by the United States in its sole discretion. Inco shall give the United States 30 calendar days notice before exercising any contract right to cancel or terminate the Alternative Supply Agreement and before implementing any material change to any term related to the length of the Alternative Supply Agreement, the volume and quality of the Feedstock, or the price. In the performance of the Alternative Supply Agreement, defendants shall take no action the effect of which is to interfere with or impede the ability of the Alternative Acquirer to compete effectively in the sale of High-Purity Nickel.

C. Unless the United States otherwise consents in writing, the divestiture pursuant to Section V of this Final Judgment shall include the entire Alternative Divested Business, Alternative Supply Agreement, and Third-Party Feedstock Option, and shall be accomplished in such a way as to satisfy the United States, in its sole discretion, that the Alternative Divested Business can and will be used by the Alternative Acquirer as part of a viable, ongoing business, engaged in producing High-Purity Nickel for sale worldwide, including the United States. A divestiture pursuant to Section V of this Final Judgment, shall be accomplished so as to satisfy the United States, in its sole discretion, that:

1. The Alternative Acquirer has the intent and capability (including the necessary managerial, operational, technical and financial capability) to compete effectively in the production and sale of High-Purity Nickel; and

2. That none of the terms of any agreement between the Alternative Acquirer and defendants give defendants the ability unreasonably to raise the Alternative Acquirer's costs, to lower the Alternative Acquirer's efficiency, or otherwise to interfere in the ability of the Alternative Acquirer to compete effectively in the production and sale of High-Purity Nickel; and

3. The Alternative Divested Business will remain viable and the divestiture of the Alternative Divested Business will remedy the competitive harm alleged in the Complaint.

D. Nothing in this Final Judgment shall be construed to require the Alternative Acquirer as a condition of any license granted by or to defendants pursuant to Sections II (E)(2)–(4) to extend to defendants the right to use the Alternative Acquirer's improvements to processes used in the production of Nikkelverk Refinery Products.

E. With respect to any divestiture to an Alternative Acquirer under Section V of this Final Judgment, defendants shall have the same obligations to the Alternative Acquirer with respect to the Alternative Divested Business as they do to the Acquirer with respect to the Divested Business as set forth in Sections IV(B), (C), (D), (F), and (G) of the Final Judgment.

F. After the appointment of a trustee becomes effective, only the trustee shall have the right to sell the Alternative Divested Business. The trustee shall have the power and authority to accomplish the divestiture to an Alternative Acquirer acceptable to the United States at such price and on such terms as are then obtainable upon reasonable effort by the trustee, subject to the provisions of Sections V and VI of this Final Judgment, and shall have such other powers as this Court deems appropriate. Subject to Section V(H) of this Final Judgment, the trustee may hire at the cost and expense of defendants any investment bankers, attorneys, or other agents, who shall be solely accountable to the trustee, reasonably necessary in the trustee's judgment to assist in the divestiture.

G. Defendants shall not object to a sale by the trustee, or to the Alternative Supply Agreement or the Third-Party Feedstock Option ordered by the trustee, on any ground other than the trustee's malfeasance. Any such objections by defendants must be conveyed in writing to the United States and the trustee within ten (10) calendar days after the trustee has provided the notice required under Section VI.

H. The trustee shall serve at the cost and expense of defendants, on such terms and conditions as plaintiff approves, and shall account for all monies derived from the sale of the Alternative Divested Business and all costs and expenses so incurred. After approval by the Court of the trustee's accounting, including fees for its services and those of any professionals and agents retained by the trustee, all remaining money shall be paid to defendants and the trust shall then be terminated. The compensation of the trustee and any professionals and agents retained by the trustee shall be reasonable in light of the value of the Alternative Divested Business and based on a fee arrangement providing the trustee with an incentive based on the price and terms of the divestiture and the speed with which it is accomplished, but timeliness is paramount.

I. Defendants shall use their best efforts to assist the trustee in accomplishing the required divestiture. The trustee and any consultants, accountants, attorneys, and other persons retained by the trustee shall have full and complete access to the

personnel, books, records, and facilities of the business to be divested, and defendants shall develop financial and other information relevant to such business as the trustee may reasonably request, subject to customary confidentiality protection for trade secret or other confidential research, development, or commercial information. Defendants shall take no action to interfere with or to impede the trustee's accomplishment of the divestiture.

J. After its appointment, the trustee shall file monthly reports with the United States and the Court setting forth the trustee's efforts to accomplish the divestiture ordered under this Final Judgment. To the extent such reports contain information that the trustee deems confidential, such reports shall not be filed in the public docket of the Court. Such reports shall include the name, address, and telephone number of each person who, during the preceding month, made an offer to acquire, expressed an interest in acquiring, entered into negotiations to acquire, or was contacted or made an inquiry about acquiring, any interest in the Alternative Divested Business and shall describe in detail each contact with any such person. The trustee shall maintain full records of all efforts made to divest the Alternative Divested Business.

K. If the trustee has not accomplished such divestiture within six months after its appointment, the trustee shall promptly file with the Court a report setting forth (1) The trustee's efforts to accomplish the required divestiture; (2) the reasons, in the trustee's judgment, why the required divestiture has not been accomplished; and (3) the trustee's recommendations. To the extent such reports contain information that the trustee deems confidential, such reports shall not be filed in the public docket of the Court. The trustee shall at the same time furnish such report to the plaintiff who shall have the right to make additional recommendations consistent with the purpose of the trust. The Court thereafter shall enter such orders as it shall deem appropriate to carry out the purpose of the Final Judgment, which may, if necessary, include extending the trust and the term of the trustee's appointment by a period requested by the United States.

VI. Notice of Proposed Divestiture

A. Within two (2) business days following execution of a definitive divestiture agreement, the trustee shall notify the United States and the defendants of any proposed divestiture required by Section V of this Final Judgment. The notice shall set forth the details of the proposed divestiture and list the name, address, and telephone number of each person not previously identified who offered or expressed an interest in or desire to acquire any ownership interest in the Alternative Divested Business, together with full details of the same.

B. Within fifteen (15) calendar days of receipt by the United States of such notice, the United States may request from defendants, the proposed Alternative Acquirer, any other third party, or the trustee if applicable, additional information concerning the proposed divestiture, the proposed Alternative Acquirer, and any other potential Alternative Acquirer. Defendants and the trustee shall furnish any additional information requested within fifteen (15) calendar days of the receipt of the request, unless the parties shall otherwise agree.

C. Within (a) thirty (30) calendar days after receipt of the notice or (b) twenty (20) calendar days after the United States has been provided the additional information requested from defendants, the proposed Alternative Acquirer, any third party, or the trustee, whichever is later, the United States shall provide written notice to defendants and the trustee, if there is one, stating whether or not it objects to the proposed divestiture. If the United States provides written. notice that it does not object, the divestiture may be consummated, subject only to defendants' limited right to object to the sale under Section V(G) of this Final Judgment. Absent written notice that the United States does not object to the proposed Alternative Acquirer or upon objection by the United States, a divestiture proposed under Section V shall not be consummated. Upon objection by defendants under Section V(G), a divestiture proposed under Section V shall not be consummated unless approved by the Court.

VII. Financing

To the extent that defendants are issued Acquirer Shares pursuant to the Agreement to Acquire the Divested Business Through Purchase of FNA Group Shares dated June 6, 2006 between Falconbridge and LionOre, or otherwise, in exchange for financing part of the Acquirer's acquisition of the Divested Business, defendants:

1. Shall, within 150 days after the earlier of (a) the Acquisition of Falconbridge, or (b) the issuance of the Acquirer Shares, divest in a manner consistent with this Final Judgment all of the Acquirer Shares;

2. Shall divest the Acquirer Shares by open market sale, public offering, private sale, repurchase by LionOre, or a combination thereof. The divestiture of the Acquirer Shares shall not be made: (i) To any person other than LionOre who provides High-Purity Nickel unless the United States shall otherwise agree in writing; or (ii) in a manner that, in the sole judgment of the United States, could significantly impair LionOre as an effective competitor in the production and sale of High-Purity Nickel;

3. Shall not be issued more than the Acquirer Shares;

4. Shall not exercise any rights relating to the Acquirer Shares, including but not limited to (i) exercising or permitting the exercise of any voting rights, (ii) electing, nominating, appointing, or otherwise designating or participating as officer or directors; (iii) participating. as a member of the Board of Directors or otherwise, in any meeting of the Board of Directors, (iv) participating in any committees or other governing body of LionOre; (v) exercising any veto rights with respect to the business of LionOre, including veto power over changes in control of LionOre, over significant asset purchases or sales, over change in majority of board membership, or over changes in majority ownership of LionOre; (vi) obtaining any financial or business information with respect to LionOre that is not otherwise publicly available. In no event shall defendant influence or attempt to influence the decision-making, management, or policies of LionOre; and

5. Shall not acquire, directly or indirectly, any shares of, or other ownership interest in, LionOre, within two years of divesting the Acquirer Shares.

VIII. Hold Separate

Until the divestiture required by this Final Judgment has been accomplished, defendants shall take all steps necessary to comply with the Hold Separate Stipulation and Order entered by this Court. Defendants shall take no action that would jeopardize the divestiture ordered by this Court.

IX. Affidavits

A. Within twenty (20) calendar days of the filing of the Complaint in this matter, and every thirty (30) calendar days thereafter until the divestiture has been completed under Section IV or Section V, defendants shall deliver to the United States an affidavit as to the fact and manner of its compliance with Section IV or Section V of this Final Judgment. Every twelve (12) months following completion of the divestiture required by Section IV or Section V, defendants shall deliver to the United States an affidavit that describes in reasonable detail all actions defendants have taken and all steps defendants have implemented on an ongoing basis to comply with Section IV(E) or Section V(B) of this Final Judgment, including compliance with the Supply Agreement. Defendants shall, in addition, deliver to the United States an affidavit describing any changes to the Supply Agreement outlined in defendants' earlier affidavits filed pursuant to this section within fifteen (15) calendar days after the change is implemented.

B. Defendants shall keep all records of all efforts made to preserve the Divested Business and to divest the Divested Business until one year after such divestiture has been completed.

C. Within twenty (20) calendar days of the filing of the Complaint in this matter, and every thirty (30) calendar days thereafter until the divestiture of the Acquirer Shares has been completed under Section VII of the Final Judgment, defendants shall deliver to the United States an affidavit that describes in reasonable detail all actions defendants have taken and all steps defendants have implemented on an ongoing basis to comply with Section VII of this Final Judgment.

X. Compliance Inspection

A. For purposes of determining or securing compliance with this Final Judgment, or of determining whether the Final Judgment should be modified or vacated, and subject to any legally recognized privilege, from time to time duly authorized representatives of the United States Department of Justice, including consultants and other persons retained by the United States, shall, upon written request of a duly authorized representative of the Assistant Attorney General in charge of the Antitrust Division, and on reasonable notice to defendants, be permitted:

1. Access during defendants' office hours to inspect and copy, or at plaintiffs option, to require defendants to provide copies of, all books, ledgers, accounts, records and documents in the possession, custody, or control of defendants, relating to any matters contained in this Final Judgment; and

2. To interview, either informally or on the record, defendants' officers, employees, or agents, who may have their individual counsel present, regarding such matters. The interviews shall be subject to the reasonable convenience of the interviewee and without restraint or interference by defendants.

B. Upon the written request of a duly authorized representative of the Assistant Attorney General in charge of the Antitrust Division, defendants shall submit written reports, under oath if requested, relating to any of the matters contained in this Final Judgment as may be requested.

C. No information or documents obtained by the means provided in this section shall be divulged by the United States to any person other than an authorized representative of the executive branch of the United States, except in the course of legal proceedings to which the United States is a party (including grand jury proceedings), or for the purpose of securing compliance with this Final Judgment, or as otherwise required by law.

D. If at the time information or documents are furnished by defendants to the United States, defendants represent and identify in writing the material in any such information or documents to which a claim of protection may be asserted under Rule 26(c)(7) of the Federal Rules of Civil Procedure, and defendants mark each pertinent page of such material, ''Subject to claim of protection under Rule 26(c)(7) of the Federal Rules of Civil Procedure,'' then the United States shall give defendants ten (10) calendar days notice prior to divulging such material in any legal proceeding (other than a grand jury proceeding).

XI. No Reacquisition

Defendants may not reacquire any part of the Divested Business during the term of this Final Judgment.

XII. Retention of Jurisdiction

This Court retains jurisdiction to enable any party to this Final Judgment to apply to this Court at any time for further orders and directions as may be necessary or appropriate to carry out or construe this Final Judgment, to modify any of its provisions, to enforce compliance, and to punish violations of its provisions.

XIII. Expiration of Final Judgment

Unless this Court grants an extension, this Final Judgment shall expire ten years from the date of its entry.

XIV. Public Interest Determination

Entry of this Final Judgment is in the public interest. The parties have complied with the requirements of the Antitrust Procedures and Penalties Act, 15 U.S.C. 16, including making copies available to the public of this Final Judgment, the Competitive Impact Statement, and any comments thereon and the United States' responses to comments. Based upon the record before the Court, which includes the Competitive Impact Statement and any comments and response to comments filed with the Court, entry of this Final Judgment is in the public interest.

Date: _____

Court approval subject to procedures of the Antitrust Procedures and Penalties Act, 15 U.S.C. 16.

_____

United States District Judge

Competitive Impact Statement

Plaintiff United States of America (''United States''), pursuant to Section 2(b) of the Antitrust Procedures and Penalties Act (''APPA'' or ''Tunney Act''), 15 U.S.C. 16(b)–(h), files this Competitive Impact Statement relating to the proposed Final Judgment submitted for entry in this civil antitrust proceeding.

Nature and Purpose of the Proceeding

The United States filed a civil antitrust Complaint on June 23, 2006, seeking to enjoin the proposed acquisition by defendant Inco Limited (''Inco'') of defendant Falconbridge Limited (''Falconbridge''). The Complaint alleges that the likely effect of this acquisition would be to lessen competition substantially in the development, production and sale of high-purity nickel (''High-Purity Nickel''), i.e., a purer form of nickel used for certain alloys such as those used in safety-critical parts for jet engines, in violation of Section 7 of the Clayton Act. This loss of competition would likely result in higher prices, lower quality, less innovation, and less favorable delivery terms to customers in the High-Purity Nickel market.

At the same time the Complaint was filed, the United States filed a Hold Separate Stipulation and Order and a proposed Final Judgment. These are designed to eliminate the anticompetitive effects of the acquisition while permitting Inco to complete its acquisition of Falconbridge. Under the proposed Final Judgment, which is explained more fully below, Inco is required to divest assets that include Falconbridge's Nikkelverk refinery in Kristiansand, Norway (''Nikkelverk Refinery''), and Falconbridge's nickel marketing businesses. The proposed Final Judgment requires that the divestiture of these assets be made to LionOre Mining International Ltd. (''LionOre''), a company headquartered in London, United Kingdom. LionOre is not currently involved in the refining of nickel, but owns nickel mining and processing resources in Africa and Australia, and has had plans to enter the business of refining nickel and thus become a fully-integrated nickel producer. Its acquisition of the Nikkelverk refinery and the other assets included in the proposed divestiture will accelerate LionOre's becoming a fully integrated nickel producer, and make it a viable and active competitor in the High-Purity Nickel market.

The proposed Final Judgment requires that the divestiture to LionOre take place concurrently with the acquisition of Falconbridge by Inco. Under the terms of the Hold Separate Stipulation and Order, Falconbridge must maintain and preserve, until the acquisition is consummated, the Nikkelverk Refinery and other divestiture assets (hereafter ''Divested Business'') as an ongoing, economically viable competitive business. The Hold Separate Stipulation and Order further requires that, upon Inco's acquisition of the first share of Falconbridge common stock, the defendants will ensure that the Divested Business operates as an independent, economically viable ongoing competitive business, held separate and apart from Inco, and that it will remain independent and uninfluenced by Inco.

The proposed Final Judgment also provides that, if for any reason the divestiture to LionOre does not occur as required by the proposed Final Judgment, a trustee will be appointed to divest the assets to an Alternative Acquirer, which is defined as a company that is in the metals mining or processing business and is able to supply, on a long-term basis, sufficient Feedstock to assure the United States, in its sole discretion, that the Nikkelverk Refinery will remain an economically viable competitive business.

The United States and defendants have stipulated that the proposed Final Judgment may be entered after compliance with the APPA. Entry of the proposed Final Judgment would terminate this action, except that the Court would retain jurisdiction to construe, modify, or enforce the provisions of the proposed Final Judgment and to punish violations thereof.

II. Description of the Events Giving Rise to the Alleged Violation

A. The Defendants and the Proposed Transaction

Inco, a Canadian corporation, has its corporate headquarters and principal place of business in Toronto, Ontario, Canada. As one of the largest mining companies in the world, Inco is primarily engaged in mining, processing, and refining nickel, and also produces other elements, such as cobalt and platinum group metals (''PGMs''), as by-products of its nickel production. In 2005, Inco reported total sales of approximately $4.7 billion. The company's main nickel mining, processing, and refining operations are located in Canada, although it also owns mines and processing facilities in many other parts of the world. Inco's High-Purity Nickel refining operations are located in Ontario, Canada, and Wales, United Kingdom. Inco operates in the United States through its wholly-owned subsidiary International Nickel, Inc., located at Saddlebrook, New Jersey, which markets and sells in the United States nickel and other products manufactured by Inco. Inco's High-Purity Nickel is shipped to customers all over the world, including the United States.

Falconbridge, a Canadian corporation, also has its corporate headquarters and principal place of business in Toronto, Ontario, Canada. Like Inco, Falconbridge is one of the world's largest mining companies and engages in all phases of the production of nickel and other refined elements. The main products that Falconbridge produces are nickel and copper, but the company also produces cobalt, PGMs, and other elemental metals as by-products of both its nickel and

copper refining operations. In 2005, Falconbridge reported total sales of approximately $7.7 billion. Falconbridge's primary nickel mining and processing facilities are located in Ontario, Canada, although it also has such facilities worldwide. Falconbridge's only High-Purity Nickel refining operation is the Nikkelverk Refinery located in Kristiansand, Norway. The company operates in the United States through its wholly-owned subsidiary, Falconbridge U.S., Inc., located at Pittsburgh, Pennsylvania, which markets and sells in the United States nickel and other products manufactured by Falconbridge. The High-Purity Nickel produced by the Nikkelverk Refinery is shipped to customers all over the world, including the United States.

Inco and Falconbridge entered into an agreement dated October 10, 2005, in which Inco stated that it intended to offer to purchase all of the common shares of Falconbridge that it did not already own. Also pursuant to that agreement, Falconbridge's Board of Directors stated that it had determined that it is in the best interests of Falconbridge to support the offer, recommend acceptance of Inco's offer to holders of the common shares of Falconbridge, and use its reasonable best efforts to permit Inco's offer to be successful, on the terms and conditions contained in the agreement. On October 24, 2005, Inco made a formal offer to purchase all of the outstanding common shares of Falconbridge in a transaction valued at over $15 billion. Inco's offer originally was open for acceptance until December 23,2005, but this date has been extended several times, most recently to June 30, 2006. The acquisition, among other things, would combine the operations of the two leading providers of High-Purity Nickel worldwide. The United States alleges in its Complaint that this proposed transaction, as initially agreed to by the defendants, would lessen competition substantially in the market for High-Purity Nickel in violation of section 7 of the Clayton Act.

B. The Competitive Effects of the Transaction on the High-Purity Nickel Market

Nickel is a metallic element that is particularly resistant to high temperatures, high stresses, and corrosion. Nickel is often combined with other materials to form alloys with particular performance characteristics. These performance characteristics depend on the amount of nickel and other elements contained in the particular alloy. As a general proposition, as the amount of nickel in the alloy increases, the more resistant the alloy is to heat and stress. One sub-set of nickel-based alloys is called super alloys, which generally contain between 50 and 70 percent nickel, as well as specific amounts of other elements, including iron, cobalt, and chromium, that combine to give the alloy very specific performance characteristics. Super alloys are used primarily in chemical processing plants, medical applications, industrial power generation, and various aerospace applications. Many products made from super alloys, such as the rotating parts of jet engines, are considered safety-critical parts. For these parts, it is vital that, in addition to containing the proper amount of nickel, the super alloy be as free as possible from certain trace elements that could compromise the performance of the product and result in serious problems, including engine failure. The nickel that meets these demanding requirements is High-Purity Nickel. High-Purity Nickel is refined nickel of sufficient purity and chemical composition that it can be utilized for safety-critical applications. Only a small portion of the refined nickel produced in the world meets the specifications for High-Purity Nickel.

High-Purity Nickel constitutes an essential ingredient in the production of super alloys used for safety-critical applications. The Complaint alleges that a small but significant post-acquisition increase in the price of High-Purity Nickel would not cause purchasers of super alloys used for safety-critical applications to substitute non-High-Purity Nickel or elements other than nickel so as to make such a price increase unprofitable.

The Complaint also alleges that the relevant geographic market is the world, because all of the High-Purity Nickel sold in the world is mined, processed, and refined outside of the United States, and both Inco and Falconbridge sell High-Purity Nickel throughout the world. Both companies import High-Purity Nickel into the United States and sell that nickel to customers located throughout the United States.

The market for High-Purity Nickel is already highly concentrated. Inco and Falconbridge are by far the two largest producers of High-Purity Nickel sold in the United States and throughout the world. Inco and Falconbridge each account for at least 40 percent of the worldwide sales of High-Purity Nickel. Combined, Inco and Falconbridge would account for over 80 percent of worldwide High-Purity Nickel sales.

Only three other companies have demonstrated any ability to produce High-Purity Nickel. While one other finn consistently produces High-Purity Nickel, its available capacity is substantially less than that of either Inco or Falconbridge, and it cannot economically increase its capacity. Two other companies have produced small amounts of High-Purity Nickel, but are not substantial competitors in the High-Purity Nickel market. While both have substantial capacity to make non-High-Purity Nickel, their current ability to make High-Purity Nickel, and to make it on a consistent basis, is very limited. The other current producers of High-Purity Nickel do not have the ability, individually or collectively, to constrain effectively a unilateral exercise of market power in High-Purity nickel by a combined Inco and Falconbridge.

As alleged in the Complaint, High-Purity Nickel customers generally view Inco's and Falconbridge's High-Purity Nickel as their only available options and do not view the products of other producers as viable alternatives due to concerns relating to the other producers' quality, capacity, and reliability. The vigorous and aggressive competition between Inco and Falconbridge in the production and sale of High-Purity Nickel has benefitted these customers, as Inco and Falconbridge have competed directly in terms of price, quality, innovation and delivery terms. The acquisition as originally proposed would eliminate all competition between Inco and Falconbridge, reduce the number of significant worldwide suppliers of High-Purity Nickel from three to two, and substantially increase the likelihood that Inco would unilaterally raise the price of High-Purity Nickel to a significant number of customers.

The Complaint also alleges that the merged firm would have the ability to increase prices to certain customers of High-Purity Nickel that must purchase High-Purity Nickel because they use it in super alloys used for safety-critical. applications, even though other customers purchase High-Purity Nickel for different uses and can often substitute non-High-Purity Nickel. The combined Inco and Falconbridge would be able to determine their High-Purity Nickel customers' end-uses and identify which customers are purchasing High-Purity Nickel specifically for super alloys used for safety-critical applications. They could, therefore, charge customers that are purchasing High-Purity Nickel for super alloys used for safety-critical applications a higher price than customers that are purchasing High-Purity Nickel for other uses.

Successful entry or expansion by another firm into the development, manufacture, and sale of High-Purity Nickel would be difficult, time-consuming, and costly. As alleged in the Complaint, companies not currently producing nickel of any kind would require roughly three to five years and the expenditure of at least $100 million to build a refinery to produce finished nickel product, and it would require even greater expenditures to enter the High-Purity Nickel market. A new entrant in the High-Purity Nickel market must invest in additional equipment and processes to extract sufficient undesirable trace elements to produce the High-Purity Nickel required by makers of super alloys used for safety-critical applications. Further, if not vertically integrated, the new entrant also must secure nickel feed sources of sufficient quality needed to make High-Purity Nickel. The United States investigated whether nickel producers not currently capable of producing High-Purity Nickel could easily enter the High-Purity Nickel market. The investigation concluded, however, that such producers would require an incremental investment of millions of dollars over several years to modify facilities and processes to become capable of producing High-Purity Nickel. A small but significant price increase in High-Purity Nickel would not be sufficient to induce these companies to invest the substantial time and money necessary to enter the High-Purity Nickel market. A new entrant in the High-Purity Nickel market also must be able to produce High-Purity Nickel in sufficient quantities, and with sufficiently consistent purity levels that customers could depend on it reliably to provide the High-Purity Nickel. Therefore, entry or expansion by any other firm into the High-Purity Nickel market will not be timely, likely, or sufficient to defeat an anticompetitive price increase that would result from Inco's acquisition of Falconbridge as originally proposed.

III. Explanation of the Proposed Final Judgment

The divestiture required by the proposed Final Judgment will eliminate the anticompetitive effects of the acquisition in the market for High-Purity Nickel by establishing a new, independent, and economically viable competitor, which will include essentially all of the current nickel refining and marketing business of Falconbridge. This divestiture is designed to remedy the anticompetitive effects of the proposed transaction while preserving beneficial efficiencies that the parties anticipate achieving through the combination of the other businesses of Inco and Falconbridge. As discussed below, the proposed Final Judgment provides that LionOre shall be the Acquirer of the Divested Business. It also provides that the divestiture to LionOre must be accomplished in such a way as to demonstrate to the sole satisfaction of the United States that the Divested Business will remain viable and will remedy the competitive harm alleged in the Complaint. The divestiture must also be accomplished in a manner that satisfies the United States, in its sole discretion, that none of the terms of any agreement between LionOre and the defendants gives the defendants the ability unreasonably to raise LionOre's costs, lower LionOre's efficiency, or otherwise interfere in the ability of LionOre to compete effectively in the production and sale of High-Purity Nickel. The proposed Final Judgment also provides for continued, contractually guaranteed suitable refinery feeds (''Feedstock'') to Nikkelverk through the establishment and continuation of a Feedstock supply agreement between LionOre and the defendants, to supplement LionOre's own feedstock supplies.

A. Identification of LionOre as the Purchaser of the Divested Business

A number of considerations led the United States to specifically approve and designate LionOre as the entity to whom the Divested Business should be sold. In the course of its investigation, the United States determined that competition in the High-Purity Nickel market would be most effectively preserved if the divestiture of the Nikkelverk assets were made to a purchaser that possessed its own nickel feedstock sources, thus helping to ensure that Nikkelverk would have a secure and long-term source of supply. LionOre satisfies that criterion. The defendants identified LionOre as a potential purchaser of the Divested Business that satisfies this criterion, and the United States undertook an evaluation of LionOre and determined that its ownership of Nikkelverk would preserve vigorous competition in the High-Purity Nickel market. Additionally, the defendants and LionOre had agreed on the terms of the divestiture, and entered into a number of subordinate agreements that will help ensure that LionOre will be able to operate Nikkelverk successfully.

Given the parties' agreement with LionOre and the United States' determination that the divestiture to LionOre would resolve the competitive concerns, the United States drafted the proposed Final Judgment to order the sale. Under such circumstances, the United States' competitive concerns are often resolved by a ''fix-it-first'' remedy.[1] A fix-it-first remedy is a structural remedy that the parties implement and the United States accepts before a merger is consummated. In such a case, there is no need for the United States to file a Complaint to preserve competition. In this case, however, two aspects of the remedy led the United States to seek entry of a Final Judgment to ensure Court oversight of the defendants' fulfillment of their commitments. (Antitrust Division Policy Guide to Merger Remedies, Section IV.A; p. 28.) First, preservation of competition required not only that the Nikkelverk assets be divested, but that the defendants continue to supply feedstock to Nikkelverk for a number of years. (This part of the remedy is described in more detail in Section III.C. below.) Second, in order to expedite its purchase, LionOre will be issuing stock to Falconbridge, subject to the requirement that defendants sell within 150 days any shares of LionOre that it receives as partial payment for the sale of the Divested Business. To ensure compliance with these ongoing commitments, the United States determined that a traditional ''fix-it-first'' remedy would not be appropriate, and that it would be necessary to seek entry of the proposed Final Judgment.

Because this is not a traditional fix-it-first remedy, the United States also determined that the proposed Final Judgment should anticipate the possibility, however remote, that for some reason the sale to LionOre does not take place. Section V of the proposed Final Judgment therefore requires that, if the divestiture to LionOre does not occur in the manner called for in Section IV, a trustee will be appointed to sell the assets to an Alternative Acquirer. For the most part, the assets to be divested, and the Defendants' obligations regarding the divestiture, are the same whether the sale is made to LionOre under Section IV or an Alternative Acquirer under Section V. However, since, unlike LionOre, an Alternative Acquirer has not already entered into agreements with the defendants, the proposed Final Judgment gives the Alternative Acquirer the option to enter into such agreements, including the ability to choose among several options, as discussed below, regarding the manner in which third-party feedstocks will be secured.

B. Assets

The Divested Business as defined in the proposed Final Judgment means Falconbridge Nikkelverk A/S (the Nikkelverk Refinery in Norway), Falconbridge's three current-nickel marketing arms (Falconbridge, U.S., Inc.; Falconbridge Europe S.A.; and Falconbridge (Japan) Limited), Falconbridge International Limited (''FIL''), the Falconbridge subsidiary responsible for the current acquisition of feedstock from third parties, and related assets. The proposed Final Judgment includes a complete descriptive list of related divestiture assets designed to enable the Divested Business to compete vigorously.[2] In summary, the list of divested assets includes all tangible assets used in the development, production, servicing, and sale of the products currently made at the Nikkelverk Refinery (''Nikkelverk Refinery Products''); and all intangible assets that have been used exclusively or primarily in the development, production, servicing, and sale of products, including but not limited to all intellectual property, and trade names (including the product or trade name ''SuperElectro''). With respect to any other intangible assets that are used by the Divested Business and also have been used by Falconbridge's other businesses (i.e., the non-Divested Business), LionOre may obtain a non-exclusive, non-transferable, fully paid-up license for such intangible assets (including the use of the name ''Falconbridge''). In addition, the proposed Final Judgment requires Inco to provide information to LionOre about current employees to enable LionOre to make offers of employment. The defendants will not interfere with any negotiations by LionOre to employ any of Falconbridge's employees whose responsibilities include the research, development, production, operation, or sale of the products of the Divested Business, or procurement of Feedstock from third parties. As noted above, the defendants bear these obligations whether the sale is made to LionOre under Section IV, or to an Alternative Acquirer under Section V.

The United States is satisfied that LionOre possesses the incentive and capability to use the Divested Business to compete successfully in the High-Purity Nickel market. The proposed Final Judgment provides that the United States must also be satisfied that the manner in which the divestiture to LionOre is accomplished, and any agreements between the defendants and LionOre, do not interfere with the ability of LionOre to compete successfully in that market.

C. Feedstock Supply

As part of the divestiture. the proposed Final Judgment also addresses the potential need for LionOre to have reliable and sufficient Feedstock supply for the Divested Business. This is accomplished in three ways. First, Inco has entered into a supply agreement (''Supply Agreement'') with LionOre by which Inco commits to supply Feedstock, produced by Inco, to be used in operating the Nikkelverk Refinery. Second, Inco has agreed to divest to LionOre the Falconbridge group that is responsible, in part, for procuring feedstock for Nikkelverk from third parties along with existing third-party supply agreements. Third, as a miner and processor of nickel, including feedstock currently refined at Nikkelverk, LionOre has

[1] A fix-it-first remedy has several benefits, including quick and certain divestiture, removing the need for litigation, allowing the Antitrust Division to use its resources more efficiently, and saving society from incurring real costs. (Antitrust Division Policy Guide to Merger Remedies, Section IV.A, p. 27)

[2] The assets to be divested to an Alternative Acquirer, defined as the Alternative Divested Business, are the same as those to be divested to LionOre, except that FIL is not included. The proposed Final Judgment gives the Alternative Acquirer the option of acquiring FlL, but does not require the acquisition; LionOre has already chosen to acquire FIL.

current and long-term access to feedstock of its own.

Under the Supply Agreement provision, it is the option of LionOre to procure from Inco the same or substantially the same quality and volume of Feedstock provided by Falconbridge to the Nikkelverk Refinery. Currently, Falconbridge provides about 70% of the Feedstock for the Nikkelverk Refinery from its own operations. At the option of LionOre, such Supply Agreement may have a term of up to ten years. The terms and conditions of the Supply Agreement must be commercially reasonable and designed to enable LionOre to compete effectively in the sale of High-Purity Nickel, and must be approved by the United States in its sole discretion. The proposed Final Judgment also provides that Inco give the United States thirty days notice before implementing any material change to the Supply Agreement related to the length of the Supply Agreement, to the volume and quality of the Feedstock, or price, and further provides that Inco in the performance of the Supply Agreement will take no action to interfere with LionOre's ability to compete.

Although the Antitrust Division generally disfavors long-term supply agreements, the Division has agreed to a long-term supply agreement here for three reasons. First, long-term supply agreements are common in this industry and may be necessary to ensure LionOre's ability to compete effectively. Second, the agreement is structured in a way that minimizes the potential risks normally associated with supply agreements. Third, the use of a supply agreement preserves substantial efficiencies the parties anticipate from the Inco/Falconbridge acquisition.

Providing LionOre the option of obtaining nickel feedstock from Inco through the Supply Agreement may be critical to its ability to compete effectively. Supply agreements of up to fifteen or twenty years are not uncommon in this industry because refineries are configured to process feedstock from specific sources, and a long-term relationship encourages and ensures long-term profitability as capital expenditures are made to the refinery to suit the feedstock. In this instance, moreover, a long-term supply agreement provides LionOre time to develop and adapt the Nikkelverk Refinery to new feedstock sources. LionOre will have incentives to make this transition, but the ten-year Supply Agreement ensures that sufficient time is available for LionOre to compete effectively while developing its own sources and establishing relationships with new third-party sources of feedstock. It is contemplated that LionOre will over time supply increasing portions of the Nikkelverk feedstock from its own mines and processing facilities, and will eventually be able to operate Nikkelverk without the need for any Inco feedstock. Until that occurs, however, it is important to ensure that Nikkelverk will have the same quality and quantity of feedstock that it currently obtains from Falconbridge.

The Supply Agreement between Inco and LionOre ensures that Inco will not be able to disadvantage the Nikkelverk Refinery through Feedstock pricing or quality, or by supply disruptions, and should not facilitate anticompetitive collusion between Inco and the Nikkelverk refinery. Moreover, key provisions of the agreement are expected to check the ability of Inco to abuse the supply relationship with LionOre. The price LionOre will pay Inco for Feedstock has been set through negotiations between Inco and LionOre, and any price changes will be linked directly to changes in the price for finished nickel as published independently by the London Metal Exchange. This wi1l further ensure that Inco, as required under the proposed Final Judgment, can take no pricing action under the Supply Agreement to interfere with or impede the ability of LionOre to compete effectively in the sale of High-Purity Nickel. Regarding the quality of Feedstock or other performance under the Supply Agreement, contract specifications for Feedstock are well-defined and chemically measurable, and inferior quality or performance will be easily detected and remedied.

The fact that High-Purity Nickel is a relatively small part of total Nikkelverk Refinery sales would make it difficult for Inco to harm competition in the High-Purity Nickel market by disrupting supply to Nikkelverk. If Inco cut a portion of feedstock supply, the Nikkelverk Refinery easily could maintain its output of High-Purity Nickel using its feedstock used for other nickel.

Nor will the Supply Agreement facilitate anticompetitive collusion between Inco and LionOre. There appear to be no structural reasons to anticipate that, in an industry where feedstock is generally destined for many end-uses of nickel, Inco could use the supply contract to coordinate with LionOre to unlawfully restrain trade in the High-Purity Nickel market. Although Inco will supply up to 70% of the Nikkelverk Refinery's feedstock, it will have incomplete information about the Nikkelverk Refinery's other sources of feedstock, and no information about its total production, product mix, and prices.[3]

The other sources of suitable feedstock for the new firm will be LionOre itself and third parties. Currently, third parties, including a company partly owned by LionOre, provide about 30% of the Nikkelverk Refinery's Feedstock pursuant to long term contracts with Falconbridge. Under the proposed Final Judgment, LionOre will acquire Falconbridge International Limited (''FIL''). FIL is a Barbados corporation and is the subsidiary of Falconbridge responsible, in part, for the current acquisition of Feedstock from third parties. By acquiring FIL, LionOre will also be acquiring the Third-Party Supply Agreements that have been made with FIL, which currently represent thirty percent of Nikkelverk' s total feedstock supply.

The Supply Agreement with Inco, the acquisition of FIL and its existing third-party feedstock, and LionOre's own substantial feedstock resources will ensure that LionOre has sufficient Feedstock at commercial terms to operate the Divested Business as a viable, ongoing business that can stand in the position of today's Falconbridge, and thereby compete effectively in the High-Purity Nickel market.

An Alternative Acquirer who purchases the Alternative Divested Business from the trustee will also have the option of entering into a Supply Agreement of up to ten years. The Alternative Acquirer will be a company that is in the metals mining or processing business and able to supply on a long-term basis, sufficient Feedstock to assure the United States, in its sole discretion, that the Nikkelverk Refinery will be a viable competitive business. An Alternative Acquirer will also have the option to obtain the right to third-party feedstock comparable to that provided by Falconbridge's interest in existing third-party supply agreements, although it would not be required to do so by acquiring FIL as part of the divested assets. It may instead choose to provide for third-party feedstock supply through the defendants' assigning existing third-party agreements to the Alternative Acquirer, or by the defendants entering into new agreements with the Alternative Acquirer to procure third-party feedstock.

Securing access to feedstock in the manner provided by the proposed Final Judgment is more advantageous than the divestiture of one or more mines that are currently used to supply Nikkelverk. The combination of the Inco and Falconbridge mines in Ontario is the source of a substantial portion of the efficiencies that the parties anticipate they will realize via the proposed acquisition. Therefore, it is appropriate to craft a remedy that preserves competition without unnecessarily disrupting potential efficiencies.

D. Timing of the Divestiture

In antitrust cases involving mergers in which the United States seeks a divestiture remedy, it requires completion of the divestiture within the shortest time period reasonable under the circumstances. In this case, because Inco and Falconbridge have significant sales and operations in Europe as well as the United States, the European Commission must also review Inco's proposed acquisition of Falconbridge. The proposed Final Judgment requires that, if Inco assumes control of Falconbridge, it must concurrently divest the Divested Business to LionOre as required by the proposed Final Judgment. During the period before Inco consummates the transaction with Falconbridge, a Hold Separate Stipulation and Order will preserve the assets to be divested, and require that Inco and Falconbridge continue to operate them as an independent competitor in the High-Purity Nickel market. During this time, Inco and Falconbridge are required to take the necessary steps to ensure that the assets remain an economically viable and ongoing business concern that is not influenced by the consummation of the acquisition, and otherwise maintain all competition during the pendency of the ordered divestiture.

The United States and the defendants fully expect that the divestiture to LionOre will take place. In the event that it does not, however, the proposed Final Judgment provides that a trustee will be appointed to

[3] It is also important to note that in this industry supply agreements are common and appear to work well. Indeed, Nikkelverk currently relies on such contracts for much of the feedstock that it uses.

sell the Alternative Divested Business. If the trustee has not effected a divestiture within six months of the trustee's appointment, the trustee shall file a report with the Court, and the Court shall thereafter enter whatever orders may be necessary to carry out the purposes of the proposed Final Judgment.

E. Financing

The Division has never favored seller financing of divestitures, because such arrangements create an avenue for the seller to influence the business decisions of the company to whom the assets have been sold. In some cases, it may also signal that the proposed purchaser has insufficient resources to be a viable competition.

In this case, although LionOre will finance the majority of its acquisition of the divested business on its own, the purchase agreement between Falconbridge and LionOre contemplates a partial payment to Falconbridge in the form of LionOre stock. The proposed Final Judgment provides, however, that any issuance of LionOre stock to Falconbridge must be strictly limited to no more than 19.99% or 49,118,057 shares, defendants are not permitted to exercise any voting or control rights associated with those shares, and, perhaps most importantly, defendants must divest themselves completely of those shares within 150 days of the divestiture of Nikkelverk to LionOre. Under these circumstances, the Division determined that there was no possibility that the dangers associated with seller financing could materialize, and that the short-term issuance of these shares to Falconbridge created no risk to competition. In addition, the Division determined that the short-term issuance of LionOre stock was necessitated by the proposed speed of the divestiture, to take place immediately upon the success of Inco's tender offer. The Division determined that with a longer divestiture period, LionOre was fully able to finance the transaction without resorting to the issuance of stock to Falconbridge.

V. Remedies Available to Potential Private Litigants

Section 4 of the Clayton Act (15 U.S.C. 15) provides that any person who has been injured as a result of conduct prohibited by the antitrust laws may bring suit in federal court to recover three times the damages the person has suffered, as well as costs and reasonable attorneys' fees. Entry of the proposed Final Judgment will neither impair nor assist the bringing of any private antitrust damage action. Under the provisions of Section 5(a) of the Clayton Act (15 U.S.C. 16(a)), the proposed Final Judgment has no *prima facie* effect in any subsequent private lawsuit that may be brought against the defendants.

VI. Procedures Available for Modification of the Proposed Final Judgment

The United States and defendants have stipulated that the proposed Final Judgment may be entered by the Court after compliance with the provisions of the APPA, provided that the United States has not withdrawn its consent. The APPA conditions entry upon the Court's determination that the proposed Final Judgment is in the public interest.

The APPA provides a period of at least sixty days preceding the effective date of the proposed Final Judgment within which any person may submit to the United States written comments regarding the proposed Final Judgment. Any person who wishes to comment should do so within sixty days of the date of publication of this Competitive Impact Statement in the **Federal Register**. All comments received during this period will be considered by the Department of Justice, which remains free to withdraw its consent to the proposed Final Judgment at any time prior to the Court's entry of judgment. The comments and the response of the United States will be filed with the Court and published in the **Federal Register**.

Written comments should be submitted to: Maribeth Petrizzi, Chief, Litigation II Section, 1401 H St., NW., Suite 3000, Antitrust Division, United States Department of Justice, Washington, DC 20530.

The proposed Final Judgment provides that the Court retains jurisdiction over this action, and the parties may apply to the Court for any order necessary or appropriate for the modification, interpretation, or enforcement of the proposed Final Judgment.

VII. Alternatives to the Proposed Final Judgment

The United States considered, as an alternative to the proposed Final Judgment, a full trial on the merits against defendants. The United States could have continued the litigation and sought preliminary and permanent injunctions against Inco's acquisition of Falconbridge. The United States is satisfied, however, that the divestiture of assets described in the proposed Final Judgment will preserve competition for the provision of High-Purity Nickel as it existed prior to the proposed acquisition, and that such a remedy would achieve all or substantially all the relief the government would have obtained through litigation, but avoids the time and expense of a trial.

VIII. Standard of Review Under the APPA for the Proposed Final Judgment

The APPA requires that proposed consent judgments in antitrust cases brought by the United States be subject to a sixty-day comment period, after which the Court shall determine whether entry of the proposed Final Judgment ''is in the public interest.'' 15 U.S.C. 16(e)(1). In making that determination, the Court shall consider:

(A) The competitive impact of such judgment, including termination of alleged violations, provisions for enforcement and modification, duration or relief sought, anticipated effects of alternative remedies actually considered, whether its terms are ambiguous, and any other competitive considerations bearing upon the adequacy of such judgment that the court deems necessary to a determination of whether the consent judgment is in the public interest; and

(B) The impact of entry of such judgment upon competition in the relevant market or markets, upon the public generally and individuals alleging specific injury from the violations set forth in the complaint including consideration of the public benefit, if any, to be derived from a determination of the issues at trial. 15 U.S.C. 16(e)(1)(A) & (B). As the United States Court of Appeals for the District of Columbia Circuit has held, the APPA permits a court to consider, among other things, the relationship between the remedy secured and the specific allegations set forth in the government's complaint, whether the decree is sufficiently clear, whether enforcement mechanisms are sufficient, and whether the decree may positively harm third parties. See *United States* v. *Microsoft Corp.*, 56 F.3d 1448, 1458–62 (D.C. Cir. 1995).

''Nothing in this section shall be construed to require the court to conduct an evidentiary hearing or to require the court to permit anyone to intervene.'' 15 U.S.C. 16(e)(2). Thus, in conducting this inquiry, ''[t]he court is nowhere compelled to go to trial or to engage in extended proceedings which might have the effect of vitiating the benefits of prompt and less costly settlement through the consent decree process.'' 119 Cong. Rec. 24,598 (1973) (statement of Senator Tunney).[4] Rather:

> [a]bsent a showing of corrupt failure of the government to discharge its duty, the Court, in making its public interest finding, should * * * carefully consider the explanations of the government in the competitive impact statement and its responses to comments in order to determine whether those explanations are reasonable under the circumstances.

United States v. *Mid-Am. Dairymen, Inc.,* 1977–1 Trade Cas. (CCH) ¶ 61,508, at 71,980 (W.D. Mo. 1977).

Accordingly, with respect to the adequacy of the relief secured by the decree, a court may not ''engage in an unrestricted evaluation of what relief would best serve the public.'' *United States* v. *BNS, Inc.,* 858 F.2d 456, 462 (9th Cir. 1988) (citing *United States* v. *Bechtel Corp.,* 648 F.2d 660, 666 (9th Cir. 1981)); see also Microsoft, 56 F.3d at 1460–62. Courts have held that:

> [t]he balancing of competing social and political interests affected by a proposed antitrust consent decree must be left, in the first instance, to the discretion of the Attorney General. The court's role in protecting the public interest is one of insuring that the government has not breached its duty to the public in consenting to the decree. The court is required to determine not whether a particular decree is the one that will best serve society, but

[4] See *United States* v. *Gillette Co.*, 406 F. Supp. 713, 716 (D. Mass. 1975) (recognizing it was not the court's duty to settle; rather, the court must only answer ''whether the settlement achieved [was] within the reaches of the public interest''). A ''public interest'' determination can be made properly on the basis of the Competitive Impact Statement and Response to Comments filed by the Department of Justice pursuant to the APPA. Although the APPA authorizes the use of additional procedures, 15 U.S.C. 16(f), those procedures are discretionary. A court need not invoke any of them unless it believes that the comments have raised significant issues and that further proceedings would aid the court in resolving those issues. See H.R. Rep. No. 93–1463, 93rd Cong., 2d Sess. 8–9 (1974), reprinted in 1974 U.S.C.C.A.N. 6535, 6538.

whether the settlement is ''*within the reaches of the public interest.*'' More elaborate requirements might undermine the effectiveness of antitrust enforcement by consent decree.

Bechtel, 648 F.2d at 666 (emphasis added) (citations omitted).[5]

The proposed Final Judgment, therefore, should not be reviewed under a standard of whether it is certain to eliminate every anticompetitive effect of a particular practice or whether it mandates certainty of free competition in the future. Court approval of a final judgment requires a standard more flexible and less strict than the standard required for a finding of liability. ''[A] proposed decree must be approved even if it falls short of the remedy the court would impose on its own, as long as it falls within the range of acceptability or is 'within the reaches of public interest.''' *United States* v. *AT&T,* 552 F. Supp. 131, 151 (D.D.C. 1982) (citations omitted) (quoting *Gillette*, 406 F. Supp. at 716), *aff'd sub nom. Maryland* v. *United States,* 460 U.S. 1001 (1983); *see also United States* v. *Alcan Aluminum Ltd.,* 605 F. Supp. 619, 622 (W.D. Ky. 1985) (approving the consent decree even though the court would have imposed a greater remedy).

Moreover, the Court's role under the APPA is limited to reviewing the remedy in relationship to the violations that the United States has alleged in its Complaint, and does not authorize the Court to ''construct [its] own hypothetical case and then evaluate the decree against that case.'' Microsoft, 56 F.3d at 1459. Because the ''court's authority to review the decree depends entirely on the government's exercising its prosecutorial discretion by bringing a case in the first place,'' it follows that ''the court is only authorized to review the decree itself,'' and not to ''effectively redraft the complaint'' to inquire into other matters that the United States did not pursue. *Id.* at 1459–60.

IX. Determinative Documents

There are no determinative materials or documents within the meaning of the APPA that were considered by the United States in formulating the proposed Final Judgment.

Dated: June 23, 2006.

Respectfully submitted,
Karen Phillips-Savoy,
Dando Cellini,
Jillian Charles,
James Foster,
Christine Hill,
Tara Shinnick,
Robert Wilder,
U.S. Department of Justice, Antitrust Division, Litigation II Section, Washington, DC 20530.

[FR Doc. 06–6361 Filed 7–19–06; 8:45 am]

BILLING CODE 4410–11–M

[5] Cf. BNS, 858 F.2d at 463 (holding that the court's ''ultimate authority under the [APPA] is limited to approving or disapproving the consent decree''); Gillette, 406 F. Supp. at 716 (noting that, in this way, the court is constrained to ''look at the overall picture not hypercritically, nor with a microscope, but with an artist's reducing glass''). See generally Microsoft, 56 F.3d at 1461 (discussing whether ''the remedies [obtained in the decree are] so inconsonant with the allegations charged as to fall outside of the ''reaches of the public interest'').

DEPARTMENT OF JUSTICE

Antitrust Division

United States v. The McClatchy Company and Knight-Ridder Incorporated; Proposed Final Judgment and Competitive Impact Statement

Notice is hereby given pursuant to the Antitrust Procedures and Penalties Act, 15 U.S.C. 16(b) through (h), that a proposed Final Judgment, Stipulation and Competitive Impact Statement have been filed with the United States District Court for the District of Columbia in *United States of America* v. *The Clatchy Company and Knight-Ridder, Incorporated*, Case No. 1:06CV01175. On June 27, 2006, the United States filed a Complaint alleging that the proposed merger of The McClatchy Company and Knight-Ridder, Incorporated would violate Section 7 of the Clayton Act, 15 U.S.C. 18. The proposed Final Judgment, filed the same time as the Complaint, requires defendant The McClatchy Company to divest the *Pioneer Press*, a daily newspaper distributed in the Minneapolis/St. Paul metropolitan area, along with certain tangible and intangible assets. Copies of the Complaint, proposed Final Judgment and Competitive Impact Statement are available for inspection at the Department of Justice in Washington, DC in Room 215, 325 Seventh Street, NW., and at the Office of the Clerk of the United States District Court for the District of Columbia, Washington, DC.

Public comment is invited within 60 days of the date of this notice. Such comments, and responses thereto, will be published in the **Federal Register** and filed with the Court. Comments should be directed to John R. Read, Chief, Litigation III Section, Antitrust Division, United States Department of Justice, 325 7th Street, NW., Suite 300, Washington, DC 20530 (telephone: 202–307–0468).

J. Robert Kramer II,

Director of Operations, Antitrust Division.

In the United States District Court for the District of Columbia

United States of America, Department of Justice, Antitrust Division, 325 7th Street, NW.; Suite 300, Washington, DC 20530, Plaintiff, v. The McClatchy Company, 2100 Q Street, Sacramento, CA 95816, and Knight-Ridder, Incorporated, 50 West San Fernando Street, San Jose, CA 95113, Defendants

Case Number 1:06CV01175, *Judge:* Richard W. Roberts, *Deck Type:* Antitrust, *Date Stamp:* 06/27/2006.

Complaint

The United States of America, acting under the direction of the Attorney General of the United States, brings this civil antitrust action to prevent the proposed merger of The McClatchy Company and Knight-Ridder, Incorporated. These two newspaper publishing companies are each other's primary competitor in the sale of local daily newspapers to readers in the Minneapolis/St. Paul metropolitan area in the state of Minnesota, and in the sale of advertising in such newspapers. The merger would substantially lessen competition and tend to create a monopoly in the publishing and distribution of newspapers in violation of Section 7 of the Clayton Act, 15 U.S.C. 18.

I. Jurisdiction and Venue

1. This action is filed by the United States pursuant to Section 15 of the Clayton Act, as amended, 15 U.S.C. 25, to obtain equitable relief to prevent a violation of Section 7 of the Clayton Act, as amended, 15 U.S.C. 18.

2. Both defendants sell newspapers and sell advertising in such newspapers, a commercial activity that substantially affects and is in the flow of interstate commerce. The Court has jurisdiction over the subject matter of this action and jurisdiction over the parties pursuant to 15 U.S.C. 22, 25, and 26, and 28 U.S.C. 1331 and 1337.

3. Both defendants conduct business in the District of Columbia and have consented to the plaintiff's assertion that venue in this District is proper under 15 U.S.C. 22 and 28 U.S.C. 1391(c).

II. Defendants and the Proposed Merger

4. Defendant The McClatchy Company (''McClatchy'') is a Delaware corporation with its headquarters in Sacramento, California. McClatchy publishes twelve (12) daily newspapers throughout the United States. In the Minneapolis/St. Paul metropolitan area, McClatchy owns and operates the Star Tribune.

5. Defendant Knight-Ridder, Incorporated (''Knight-Ridder'') is a Florida corporation With its headquarters in San Jose, California. Knight-Ridder publishes thirty-two (32) daily newspapers throughout the United States. In the Minneapolis/St. Paul metropolitan area, Knight-Ridder owns and operates the St. Paul Pioneer Press.

6. On March 12, 2006, McClatchy and Knight-Ridder entered into an ''Agreement

and Plan of Merger between The McClatchy Company and Knight-Ridder, Inc.'' (''Merger Agreement''). Pursuant to that agreement, (1) Knight-Ridder would merge with and into McClatchy; (2) Knight-Ridder would cease to exist as a separate corporate entity; and (3) McClatchy would continue to operate as the sole surviving company. As consideration for the merger, each share of Knight-Ridder common stock would be exchanged for cash and stock, for an aggregate transaction value in excess of $4 billion.

7. The merger would combine under common ownership and control the only two local daily newspapers serving the Minneapolis/St. Paul metropolitan area with any significant circulation, the Star Tribune and the St. Paul Pioneer Press.

8. The combination of these two daily newspapers would substantially reduce or eliminate competition for the sale of local daily newspapers in the Minneapolis/St. Paul metropolitan area and would likely result in higher prices and lower levels of quality and service.

9. In addition, the combination of these two daily newspapers would substantially reduce or eliminate competition for the sale of advertising in local daily newspapers in the Minneapolis/St. Paul metropolitan area and advertisers would likely pay higher prices and receive lower levels of quality and service for their advertisements.

III. Relevant Market

A. Product Market

10. Local daily newspapers, such as the Star Tribune and the St. Paul Pioneer Press, provide a unique package of services to their readers. They provide national, state, and local news in a timely manner. The news stories featured in the Star Tribune and the St. Paul Pioneer Press are detailed, as compared to the news as reported by radio or television, and cover a wide range of stories of interest to local readers in the Minneapolis/St. Paul metropolitan area, not just major news highlights. Newspapers, such as the Star Tribune and the St. Paul Pioneer Press, are portable and allow the reader to read the news, advertisements, and other information at his or her own convenience. Readers also value other features of the Star Tribune and the St. Paul Pioneer Press, such as calendars of local events and meetings, movie and TV listings, classified advertisements, commercial advertisements, legal notices, comics, syndicated columns, and obituaries. Readers of the Star Tribune and the St. Paul Pioneer Press do not consider weekly newspapers, radio news, television news, or Internet news to be adequate substitutes for local daily newspapers serving the Minneapolis/St. Paul metropolitan area. If the merged firm were to impose a small but significant and nontransitory increase in the price of local daily newspapers, it would lose too few sales to make the price increase unprofitable.

11. A newspaper's ability to attract readers and build its circulation is not only critical to competition for readers; it also directly affects its ability to compete for advertisers. A newspaper that has more readers is more attractive and more valuable to advertisers. Thus, one important reason that the Star Tribune and the St. Paul Pioneer Press compete for readers is so that they can better compete for advertisers.

12. Advertising in the Star Tribune and the St. Paul Pioneer Press allows advertisers to reach a broad cross-section of consumers in the Minneapolis/St. Paul metropolitan area with a detailed message in a timely manner. A substantial portion of the defendants' advertisers do not consider other types of advertising, such as advertising in weekly newspapers, on radio, on television, or on the Internet as adequate substitutes for advertising in a local daily newspaper. In the Minneapolis/St. Paul metropolitan area, the Star Tribune and the St. Paul Pioneer Press provide advertisers the best vehicle to advertise the price of their goods or services in a timely manner. If the merged firm were to impose a small but significant and nontransitory increase in the price of advertising in local daily newspapers, it would lose too few sales to make the price increase unprofitable.

13. Accordingly, the sale of local daily newspapers to readers and the sale of access to those readers to advertisers in those newspapers each constitutes a line of commerce, or a relevant product market, within the meaning of Section 7 of the Clayton Act.

B. Geographic Market

14. The Star Tribune and the St. Paul Pioneer Press are both produced, published, and distributed in the Minneapolis/St. Paul metropolitan area.

15. The Star Tribune and the St. Paul Pioneer Press target readers in the Minneapolis/St. Paul metropolitan area. Both papers provide news relating to the Minneapolis/St. Paul metropolitan area in addition to state and national news. Together, the Star Tribune and the St. Paul Pioneer Press generate approximately 80 percent of their total circulation from the Minneapolis/St. Paul metropolitan area.

16. Local daily newspapers that serve areas outside of the Minneapolis/St. Paul metropolitan area do not provide local news specific to the Minneapolis/St. Paul metropolitan area. From a reader's standpoint, local daily newspapers serving areas outside of the Minneapolis/St. Paul metropolitan area are not acceptable substitutes for the Star Tribune and the St. Paul Pioneer Press. If the merged firm were to impose a small but significant and nontransitory increase in the price of local daily newspapers serving the Minneapolis/St. Paul metropolitan area, it would lose too few sales to make the price increase unprofitable.

17. The Star Tribune and the St. Paul Pioneer Press allow advertisers to target readers in the Minneapolis/St. Paul metropolitan area. From the standpoint of an advertiser selling goods or services in the Minneapolis/St. Paul metropolitan area, advertising in local daily newspapers serving areas outside of the Minneapolis/St. Paul metropolitan area is not an acceptable substitute for advertising in the Star Tribune and the St. Paul Pioneer Press. If the merged firm were to impose a small but significant and nontransitory increase in the price of advertisements in local daily newspapers service the Minneapolis/St. Paul metropolitan area, it would lose too few sales to make the price increase unprofitable.

18. Accordingly, the Minneapolis/St. Paul metropolitan area in the state of Minnesota is a section of the country, or a relevant geographic market, within the meaning of Section 7 of the Clayton Act.

IV. Competitive Effects

A. Harm to Readers

19. The Star Tribune and the St. Paul Pioneer Press are each other's primary competitor in the sale of local daily newspaper in the Minneapolis/St. Paul metropolitan area, competing aggressively for readers. Their head-to-head competition has given readers in the Minneapolis/St. Paul metropolitan area higher quality news coverage, better service, and lower prices. A combination of these two newspapers under common ownership and control would substantially reduce or eliminate that competition and would decrease incentives of the merged firm to maintain high levels of quality and service.

20. The proposed merger would give the newly merged entity almost 100 percent of local daily newspaper circulation in the Minneapolis/St. Paul metropolitan area. Based on audited figures for daily circulation ending March 2004, the Star Tribune had a daily circulation of 296,069 or approximately 64 percent of readers, and the St. Paul Pioneer Press had a daily circulation of 159,223, or approximately 34 percent of readers, in the Minneapolis/St. Paul metropolitan area. Based on audited figures for Sunday circulation ending March 2004, the Star Tribune had a Sunday circulation of 517,685, or approximately 72 percent of readers, and the St. Paul Pioneer Press had a daily circulation of 203,471, or approximately 28 percent of readers, in the Minneapolis/St. Paul metropolitan area.

21. The only other local daily newspaper competitor of the merged firm in the Minneapolis/St. Paul metropolitan area is the Stillwater Gazette with a daily circulation (excluding Sunday) of 3,255 in the year ending in March 2004, which represents less than one percent of readers.

22. Using a measure of market concentration called the Herfindahl-Hirschman Index (''HHI''), explained in Appendix A, the combination of the Star Tribune and the St. Paul Pioneer Press under common ownership and control would create a monopoly and yield a post-merger HHI of approximately 9,900, representing an increase of roughly 4,488 points for daily circulation. For Sunday circulation, the combination of the Star Tribune and the St. Paul Pioneer Press would yield an HHI of approximately 10,000, an increase of roughly 4,050 points.

B. Harm to Advertisers

23. The Star Tribune and the St. Paul Pioneer Press are each other's primary competitor in the sale of advertising in local daily newspapers in the Minneapolis/St. Paul metropolitan area, competing aggressively for the business of advertisers in that area. Their head-to-head competition has been

instrumental in giving advertisers in the Minneapolis/St. Paul metropolitan area higher quality advertising, better service, and lower prices. A combination of these two newspapers under common ownership and control would substantially reduce or eliminate that competition.

24. If the two papers combine under common ownership and control, the combined entity would control virtually 100 percent of the sales of advertisements in local daily newspapers serving the Minneapolis/St. Paul metropolitan area. In 2005, the Star Tribune generated $308 million, or approximately 68 percent, in total daily newspaper advertising revenues. The St. Paul Pioneer Press generated $140 million, or approximately 32 percent, in total daily newspaper advertising revenues. The vast majority of these advertising revenues come from advertisers seeking to reach readers in the Minneapolis/St. Paul metropolitan area.

V. Entry

25. Entry by local daily newspapers in the Minneapolis/St. Paul metropolitan area is time-consuming and difficult, and is not likely to eliminate the anticompetitive effects of the merger by constraining the market power of the combined entity in the near-term, or in the foreseeable future. Local daily newspapers incur significant fixed costs, many of which are sunk. Examples of these sunk costs include hiring reporters and editors, news gathering, and marketing the very existence of the new paper, all of which take substantial time. In the event that the entrant fails or exits the newspaper industry, it cannot recover these sunk costs, making entry risky and likely unprofitable. As a result, entry will not be timely, likely, or sufficient to eliminate the competitive harm that would likely result from the proposed merger.

VI. Violation Alleged

26. On March 12, 2006, McClatchy, and Knight-Ridder entered into the Merger Agreement. Pursuant to that agreement, Knight-Ridder would merge with and into McClatchy. As a result of this transaction, the Star Tribune and the St. Paul Pioneer Press would be under common ownership and control.

27. This transaction will have the following effects, among others, in violation of Section 7 of the Clayton Act, 15 U.S.C. 18:

(a) Competition in the sale of local daily newspapers to readers in the Minneapolis/St. Paul metropolitan area will be substantially lessened or eliminated;

(b) Prices for local daily newspapers in the Minneapolis/St. Paul metropolitan area would likely increase to levels above those that would prevail absent the merger;

(c) Competition in the sale of advertising in local daily newspapers in the Minneapolis/St. Paul metropolitan area will be substantially lessened or eliminated; and

(d) Prices for advertising in local daily newspapers in the Minneapolis/St. Paul metropolitan area would likely increase to levels above those that would prevail absent the merger.

VII. Requested Relief

28. Plaintiff requests:

(a) Adjudication that the proposed merger of McClatchy and Knight-Ridder violates Section 7 of the Clayton Act;

(b) Permanent injunctive relief to prevent the consummation of the proposed merger and to prevent the defendants from entering into or carrying out any agreement, understanding or plan, the effect of which would be to combine the businesses or assets of defendants;

(c) An award to plaintiff of its costs in this action; and

(d) Such other relief as is proper.

Dated: June 27, 2006.

For Plaintiff United States of America.

Thomas O. Barnett,
Assistant Attorney General, Antitrust Division.

David L. Meyer,
Deputy Assistant Attorney General, Antitrust Division.

J. Robert Kramer II,
Director of Operations.

John R. Read,
Chief, Litigation III.

Gregg I. Malawer (D.C. Bar #481685),
Joan Hogan,
Attorneys for the United States, United States Department of Justice, Antitrust Division, Litigation III, 325 7th Street, NW., Suite 300, Washington, DC 20530, (202) 514–2000.

Exhibit A—Definition of HHI and Calculations for Market

''HHI'' means the Herfindahl-Hirschman Index, a commonly accepted measure of market concentration. It is calculated by squaring the market share of each firm competing in the market and then summing the resulting numbers. For example, for a market consisting of four firms with shares of thirty, thirty, twenty and twenty percent, the HHI is 2600 ($30^2 + 30^2 + 20^2 + 20^2 = 2600$). The HHI takes into account the relative size and distribution of the firms in a market and approaches zero when a market consists of a large number of finns of relatively equal size. The HHI increases both as the number of firms in the market decreases and as the disparity in size between those firms increases.

Markets in which the HHI is between 1000 and 1800 points are considered to be moderately concentrated, and those in which the HHI is in excess of 1800 points are considered to be concentrated. Transactions that increase the HHI by more than 100 points in concentrated markets presumptively raise antitrust concerns under the Merger Guidelines. See Merger Guidelines § 1.51.

Proposed Final Judgment

Whereas, Plaintiff, United States of America, and defendants, The McClatchy Company (''McClatchy''), and Knight Ridder, Incorporated (''Knight Ridder''), by their respective attorneys, have consented to the entry of this Final Judgment without trial or adjudication of any issue of fact or law, and without this Final Judgment constituting any evidence against or admission by any party regarding any issue of fact or law;

And whereas, Defendants agree to be bound by the provisions of this Final Judgment pending its approval by the Court;

And whereas, the essence of this Final Judgment is the prompt and certain divestiture of certain rights or assets by the Defendant McClatchy to assure that competition is not substantially lessened;

And whereas, Plaintiff requires Defendant McClatchy to make certain divestitures for the purpose of remedying the loss of competition alleged in the Complaint;

And whereas, Defendant McClatchy has represented to the United States that the divestitures required below can and will be made and that Defendant McClatchy will later raise no claim of hardship or difficulty as grounds for asking the Court to modify any of the divestiture provisions contained below;

Now, therefore, before any testimony is taken, without trial or adjudication of any issue of fact or law, and upon consent of the patties, it is *ordered, adjudged, and decreed:*

I. Jurisdiction

This Court has jurisdiction over the subject matter of and each of the parties to this action. The Complaint states a claim upon which relief may be granted against defendant under Section 7 of the Clayton Act, as amended (15 U.S.C. 18).

II. Definitions

As used in this Final Judgment:

A. *''McClatchy''* means Defendant The McClatchy Company, a Delaware corporation with its headquarters in Sacramento, California, its successors and assigns, and its subsidiaries, divisions, groups, affiliates, partnerships and joint ventures, and their directors, officers, managers, agents, and employees.

B. *''Knight Ridder''* means Defendant Knight Ridder, Inc., a Florida corporation with its headquarters in San Jose, California, its successors and assigns, and its subsidiaries, divisions, groups, affiliates, partnerships and joint ventures, and their directors, officers, managers, agents, and employees.

C. *''Pioneer Press'' or ''St. Paul Pioneer Press''* means the local daily newspaper referred to as either the Pioneer Press or the St. Paul Pioneer Press, distributed in the Minneapolis/St. Paul metropolitan area, and owned and operated by defendant McClatchy.

D. *''Star Tribune''* means the local daily newspaper, distributed in the Minneapolis/St. Paul metropolitan area, and owned and operated by defendant McClatchy.

E. *''Minneapolis/St. Paul metropolitan area''* means the area encompassing and surrounding the cities of Minneapolis and St. Paul in the state of Minnesota.

F. *''Divestiture Assets''* means all of the assets, tangible or intangible, used in the operations of the Pioneer Press, including, but not limited to:

1. All tangible assets that comprise the printing, publication, distribution, sale, and operation of the Pioneer Press, including all equipment, fixed assets and fixtures, personal property, inventory, office furniture, materials, supplies, and other tangible

property and all assets used in connection with the Pioneer Press; all licenses, permits and authorizations issued by any governmental organization relating to the Pioneer Press; all contracts, agreements, leases, commitments, certifications, and understandings relating to the Pioneer Press, including supply agreements; all customer lists, contracts, accounts, and credit records; all repair and performance records and all other records relating to the Pioneer Press;

2. All intangible assets used in the printing, publication, distribution, production, servicing, sale and operation of the Divestiture Assets, including, but not limited to all licenses and sublicenses, intellectual property, technical information, computer software (except defendant's proprietary software) and related documentation, know-how, drawings, blueprints, designs, specifications for materials, specifications for parts and devices, quality assurance and control procedures, all technical manuals and information defendant provide to their own employees, customers, suppliers, agents or licensees, and all research data relating to the Pioneer Press.

G. *''Acquirer'' or ''Acquirers''* mean the entity or entities to whom Defendant McClatchy divest the Divestiture Assets.

III. Applicability

A. This Final Judgment applies to McClatchy and Knight Ridder, as defined above, and all other persons in active concert or participation with any of them who receive actual notice of this Final Judgment by personal service or otherwise.

B. Defendant McClatchy shall require, as a condition of the sale or other disposition of all or substantially all of their assets or of lesser business units that include the Divestiture Assets, that the purchaser(s) agree(s) to be bound by the provisions of this Final Judgment.

IV. Divestitures

A. Defendant McClatchy is ordered and directed to divest the Divestiture Assets in a manner consistent with this Final Judgment to an Acquirer or Acquirers acceptable to the United States in its sole discretion, before the later of (1) sixty (60) calendar days after the filing of the Complaint in this matter or (2) five (5) days after notice of the entry of this Final Judgment by the Court. The United States, in its sole discretion, may agree to one or more extensions of this time, not to exceed sixty (60) calendar days in total, and shall notify the Court in such circumstances. Defendant McClatchy agrees to use its best effort to divest the Divestiture Assets, and to obtain all regulatory approvals necessary for such divestitures, as expeditiously as possible.

B. In accomplishing the divestiture ordered by this Final Judgment, Defendant McClatchy promptly shall make known, by usual and customary means, the availability of the Divestiture Assets. Defendant McClatchy shall inform any person making inquiry regarding a possible purchase of the Divestiture Assets that they are being divested pursuant to this Final Judgment and provide that person with a copy of this Final Judgment. Defendant McClatchy shall offer to furnish to all prospective Acquirers, subject to customary confidentiality assurances, all information and documents relating to the Divestiture Assets customarily provided in a due diligence process, except such information or documents subject to the attorney-client or work product privileges. Defendant McClatchy shall make available such information to the United States at the same time that such information is made available to any other person.

C. Defendant McClatchy shall provide to the Acquirer(s) and the United States information relating to the personnel involved in the operation of the Divestiture Assets to enable the Acquirer(s) to make offers of employment. Defendant McClatchy will not interfere with any negotiations by the Acquirer(s) to employ an employee of Defendant McClatchy whose primary responsibility relates to the operation of the Divestiture Assets.

D. Defendant McClatchy shall permit prospective Acquirers of the Divestiture Assets to have reasonable access to personnel and to make inspections of the physical facilities of any and all facilities relating the operation of the Pioneer Press; access to any and all environmental, zoning, and other permit documents and information; and access to any and all financial, operational or other documents and information customarily provided as part of a due diligence process.

E. Defendant McClatchy shall warrant to the Acquirer(s) of the Divestiture Assets that the assets will be operational on the date of sale.

F. Defendant McClatchy shall not take any action that will impede in any way the permitting, operation, or divestiture of the Divestiture Assets.

G. Defendant McClatchy shall warrant to the Acquirer(s) of the Divestiture Assets that there are no material defects in the environmental, zoning or other permits pertaining to the operation of the Assets, and that following the sale of the Divestiture Assets, Defendant McClatchy will not undertake, directly or indirectly, any challenges to the environmental, zoning or other permits relating to the operation of the Divestiture Assets.

H. Unless the United States otherwise consents in writing, the divestiture pursuant to Section IV, or by trustee appointed pursuant to Section V, of this Final Judgment, shall include the entire Divestiture Assets, and shall be accomplished in such a way as to satisfy the United States, in its sole discretion, that the Divestiture Assets can and will be used by the Acquirer(s) as part of a viable, ongoing newspaper publishing business. Divestiture of the Divestiture Assets may be made to one or more Acquirers, provided that in each instance it is demonstrated to the sole satisfaction of the United States that the Divestiture Assets will remain viable and the divestiture of such assets will remedy the competitive harm alleged in the Complaint. The divestiture, whether pursuant to Section IV or V of this Final Judgment:

1. Shall be made to an Acquirer or Acquirers that, in the United State's sole judgment, has the intent and capability (including the necessary managerial, operational, and financial capability) of competing effectively in the sale of local daily newspapers to readers and in the sale of advertising in such newspapers in the Minneapolis/St. Paul metropolitan areas; and

2. Shall be accomplished so as to satisfy the United States, in its sole discretion, that none of the terms of any agreement(s) between an Acquirer or Acquirers and defendant McClatchy give Defendant McClatchy the ability unreasonably to raise the Acquirer's costs, to lower to Acquirer's efficiency, or otherwise to interfere in the ability of the Acquirer to compete effectively.

V. Appointment of Trustee

A. If Defendant McClatchy has not divested the Divestiture Assets within the time period specified in Section IV(A), Defendant McClatchy shall notify the United States of that fact in writing. Upon application of the United States, the Court shall appoint a trustee selected by the United States and approved by the Court to effect the divestiture of the Divestiture Assets.

B. After the appointment of a trustee becomes effective, only the trustee shall have the right to sell the Divestiture Assets. The trustees shall have the power and authority to accomplish the divestiture to an Acquirer(s) acceptable to the United States at such price and on such terms as are then obtainable upon reasonable effort by the trustee, subject to the provisions of Sections IV, V and VI of this Final Judgment, and shall have such other powers as this Court deems appropriate. Subjects to Section V(D) of this Final Judgment, the trustee may hire at the cost and expense of Defendant McClatchy any investment bankers, attorneys, or other agents, who shall be solely accountable to the trustee, reasonably in the trustee's judgement to assist in the divestiture.

C. Defendant McClatchy shall not object to a sale by the trustee on any ground other than the trustee's malfeasance. Any such objections by Defendant McClatchy must be conveyed in writing to the United States and the trustee within ten (10) calendar days after the trustee has provided the notice required under Section VI.

D. The trustee shall serve at the cost and expense of defendant McClatchy, on such terms and conditions as the United States approves, and shall account for all monies derived from the sale of the assets sold by the trustee and all costs and expenses so incurred. After approval by the Court of the trustee's accounting, including fees for its services and those of any professionals and agents retained by the trustee, all remaining money shall be paid to Defendant McClatchy and the trust shall then be terminated. The compensation of the trustee and any professionals and agents retained by the trustee shall be reasonable in light of the value of the Divestiture Assets and based on a fee arrangement providing the trustee with an incentive based on the price and terms of the divestiture and the speed with which it is accomplished, but timeliness is paramount.

E. Defendant McClatchy shall use its best efforts to assist the trustee in accomplishing

the required divestiture. The trustee and any consultants, accountants, attorneys, and other persons retained by the trustee shall have full and complete access to the personnel, books, records, and facilities related to the operation of the Pioneer Press and Defendant McClatchy shall develop financial and other information relevant to the operation of the Pioneer Press as the trustee may reasonably request, subject to reasonable protection for trade secret or other confidential research, development, or commercial information. Defendant McClatchy shall take no action to interfere with or to impede the trustee's accomplishment of the divestiture.

F. After its appointment becomes effective, the trustee shall file monthly reports with the United States and the Court, setting forth the trustee's efforts to accomplish the divestiture ordered under this Final Judgment. To the extent such reports contain information that the trustee deems confidential, such reports shall not be filed in the public docket of the Court. Such reports shall include the name, address, and telephone number of each person who, during the preceding month, made an offer to acquire, expressed an interest in acquiring, entered into negotiations to acquire, or was contacted or make an inquiry about acquiring, any interest in the Divestiture Assets, and shall describe in detail each contact with any such person. The trustee shall maintain full records of all efforts made to divest the Divestiture Assets.

G. If the trustee has not accomplish such divestiture within four (4) months after its appointment, the trustee shall promptly file with the Court a report setting forth: (1) The trustee's efforts to accomplish the required divestiture, (2) the reasons, in the trustee's judgment, why the required divestiture has not been accomplished, and (3) the trustee's recommendations. To the extent such reports contain information that the trustee deems confidential, such report shall not be filed in the public docket of the Court. The trustee at the same time shall furnish such report to the United States, who shall have the right to make additional recommendations consistent with the purpose of the trust. The Court thereafter shall enter such orders as it shall deem appropriate to carry out the purpose of this Final Judgment, which may, if necessary, include extending the trust and the term of the trustee's appointment by a period requested by the United States.

VI. Notice of Proposed Divestiture

A. Within two (2) business days following execution of a definitive divestiture agreement, Defendant McClatchy or the trustee, whichever is then responsible for effecting the divestiture required herein, shall notify the United States of any proposed divestiture required by Section IV or V of this Final Judgment. If the trustee is responsible, it shall similarly notify Defendant McClatchy. The notice shall set forth the details of the proposed divestiture and list the name, address, and telephone number of each person not previously identified who offered or expressed an interest in or desire to acquire any ownership interest in the Divestiture Assets, together with full details of the same.

B. Within fifteen (15) calendar days of receipt by the United States of such notice, the United States may request from Defendant McClatchy, the proposed Acquirer(s), any other third party, or the trustee if applicable additional information concerning the proposed divestiture, the proposed Acquirer(s) and any other potential Acquirer(s). Defendant McClatchy and the trustee shall furnish any additional information requested within fifteen (15) calendar days of the receipt of the request, unless the parties shall otherwise agree.

C. Within thirty (30) calendar days after receipt of the notice or within twenty (20) calendar days after the United States has been provided the additional information requested from Defendant McClatchy, the proposed Acquirer(s), any third party and the trustee, whichever is later, the United States shall provide written notice to Defendant McClatchy and the trustee, if there is one, stating whether or not it objects to the proposed divestiture. If the United States provides written notices that it does not object, the divestiture may be consummated, subject only to Defendant McClatchy's limited right to object to the sale under Section V(C) of this Final Judgment. Absent written notice that the United States does not object to the proposed Acquirer(s) or upon objection by the United States, a divestiture proposed under Section IV or V shall not be consummated. Upon objection by Defendant McClatchy under Section V(C), a divestiture proposed under Section V shall not be consummated unless approved by the Court.

VII. Financing

Defendant McClatchy shall not finance all or any part of any purchase made pursuant to this Final Judgment.

VIII. Hold Separate Order

Until the divestitures required by the Final Judgment have been accomplished, Defendant McClatchy shall take all steps necessary to comply with the Hold Separate Stipulation and Order entered by this Court and to preserve in all material respects the Divestiture Assets. Defendant McClatchy shall take no action that would jeopardize the divestiture of the Divestiture Assets.

IX. Affidavits

A. Within twenty (20) calendar days of the filing of the Complaint and every thirty (30) calendar days thereafter until the divestiture has been completed, whether pursuant to Section IV or V of this Final Judgment, Defendant McClatchy shall deliver to the United States an affidavit as to the fact and manner of their compliance with Section IV or V of this Final Judgment. Each such affidavit shall include the name, address, and telephone number of each person who, during the preceding thirty (30) days, made an offer to acquire, expressed an interest in acquiring, entered into negotiations to acquire, or was contacted or made an inquiry about acquiring, any interest in the Divestiture Assets and shall describe in detail each contact with any such person during that period. Each such affidavit shall also include a description of the efforts that defendant McClatchy has taken to solicit buyers for the Divestiture Assets and to provide required information to prospective purchasers, including the limitations, if any, on such information. Assuming the information set forth in the affidavit is true and complete, any objection by the United States to information provided by Defendant McClatchy, including limitations on information, shall be made within fourteen (14) days of receipt of such affidavit.

B. Within twenty (20) calendar days of the filing of the Complaint in this matter, Defendant McClatchy shall deliver to the United States an affidavit that describes in reasonable detail all actions Defendant McClatchy has taken and all steps Defendant McClatchy has implemented on an ongoing basis to comply with Section IV of this Final Judgment. Defendant McClatchy shall deliver to the United States an affidavit describing any changes to the efforts and actions outlined in Defendant McClatchy's earlier affidavits filed pursuant to this section within fifteen (15) calendar days after the change is implemented.

C. Defendant McClatchy shall keep all records of all efforts made to preserve and divest the Divestiture Assets until one year after such divestiture has been completed.

X. Compliance Inspection

A. For the purposes of determining or securing compliance with this Final Judgment, or of determining whether the Final Judgment should be modified or vacated, and subject to any legally recognized privilege, from time to time duly authorized representatives of the United States Department of Justice, including consultants and other persons retained by the United States, shall, upon the written request of a duly authorized representative of the Assistant Attorney General in charge of the Antitrust Divsion, and on reasonable notice to Defendant McClatchy, be permitted:

1. Access during defendant McClatchy's office hours to inspect and copy or, at plaintiff's option, to require defendant McClatchy to provide copies of, all books, ledgers, accounts, records and documents in the possession, custody, or control of the defendant McClatchy, relating to any matters contained in this Final Judgment; and

2. To interview, either informally or on the record, defendant McClatchy's officers, employees, or agents, who may have their individual counsel present, regarding such matters. The interviews shall be subject to the interviewee's reasonable convenience and without restraint or interference by Defendant McClatchy.

B. Upon the written request of a duly authorized representative of the Assistant Attorney General in charge of the Antitrust Division, Defendant McClatchy shall submit such written reports or responses to written interrogatories, under oath if requested, relating to any of the matters contained in this Final Judgment as may be requested.

C. No information or documents obtained by the means provided in this section shall be divulged by the United States to any person other than an authorized representative of the Executive Branch of the United States, except in the course of legal proceedings to which the United States is a party (including grand jury proceedings), or

for the purpose of securing compliance with this Final Judgment, or as otherwise required by law.

D. If, at the time Defendant McClatchy furnishes information or documents to the United States, Defendant McClatchy represents and identifies in writing the material in any such information or documents to which a claim of protection may be asserted under Rule 26(c)(7) of the Federal Rules of Civil Procedure, and Defendant McClatchy marks each pertinent page of such material, ''Subject to claim of protection under Rule 26(c)(7) of the Federal Rules of Civil Procedure,'' then the United States shall give defendant McClatchy ten (10) calendar days' notice prior to divulging such material in any legal proceeding (other than a grand jury proceeding).

XI. No Reacquisition

During the term of this Final Judgment, Defendant McClatchy may not reacquire any part of the Divestiture Assets.

XII. Retention of Jurisdiction

This Court retains jurisdiction to enable any party to this Final Judgment to apply to this Court at any time for further orders and directions as may be necessary or appropriate to carry out or construe this Final Judgment, to modify any of its provisions, to enforce compliance, and to punish violations of its provisions.

XIII. Expiration of Final Judgment

Unless this Court grants an extension, this Final Judgment shall expire (10) ten years from the date of its entry.

XIV. Public Interest Determination

For the reasons set forth in the Competitive Impact Statement filed in this case, and made available for public comment, entry of this Final Judgment is in the public interest and the parties have complied with the procedures of the Antitrust Procedures and Penalties Act, 15 U.S.C. 16.

Court Approval Subject to Procedures of Antitrust Procedures and Penalties Act, 15 U.S.C. 16.

Dated: _____

_____

United States District Judge

Competitive Impact Statemnt

Plaintiff, the United States of America (''United States'' or ''Plaintiff'' or ''government''), pursuant to Section 2(b) of the Antitrust Procedures and Penalties Act (''APPA''), 15 U.S.C. 16(b)–(h), files this Competitive Impact Statement relating to the proposed Final Judgment submitted for entry in this civil antitrust proceeding.

I. Nature and Purpose of the Proceeding

Plaintiff the United States filed a civil antitrust Complaint on June 26, 2006, alleging that a proposed merger of The McClatchy Company (''McClatchy'') and Knight-Ridder, Incorporated (''Knight-Ridder'') would violate Section 7 of the Clayton Act, 15 U.S.C. 18. The Complaint alleges that McClatchy and Knight-Ridder are each other's primary competitor in the sale of local daily newspapers to readers in the Minneapolis/St. Paul metropolitan area in the state of Minnesota and in the sale of advertising in such newspapers. The merger would combine under common ownership and control the only two local daily newspapers serving the Minneapolis/St. Paul metropolitan area in the state of Minnesota and in the sale of advertising in such newspapers. The merger would combine under common ownership and control the only two local daily newspapers serving the Minneapolis/St. Paul metropolitan area, the Star Tribune and the St. Paul Pioneer Press. The newly merged firm would have essentially a 100 percent market share (by circulation and revenue). As a result, the combination of these two daily newspapers would substantially reduce or eliminate competition for readers of local daily newspapers and newspaper readers in the Minneapolis/St. Paul metropolitan area would be likely to pay higher prices and to receive lower levels of quality and service. In addition, the combination of these two daily newspapers in the Minneapolis/St. Paul metropolitan area and advertisers would be likely to pay higher prices and to receive lower levels of quality and service for their advertisements.

The prayer for relief seeks: (a) An adjudication that the proposed merger described in the Complaint would violate Section 7 of the Clayton Act; (b) permanent injunctive relief preventing the consummation of the transaction; (c) an award to the plaintiff of the costs of this action; and (d) such other relief as is proper.

Shortly before this suit was filed, a proposed settlement was reached that permits McClatchy to complete its merger with Knight-Ridder, yet preserves competition in the markets in which the transaction would raise significant competitive concerns. A Stipulation and proposed Final Judgment embodying the settlement were filed at the same time the Complaint was filed.

The proposed Final Judgment, which is explained more fully below, requires McClatchy and Knight-Ridder to divest the St. Paul Pioneer Press to acquirer(s) acceptable to the United States. Unless the United States grants a time extension, the divestiture must be completed within sixty (60) calendar days after the filing of the Complaint in this matter or five (5) calender days after notice of the entry of this Final Judgment by the Court, whichever is later.

If the divestitures are not completed within the divestiture period, the Court, upon application of the United States, is to appoint trustee selected by the United States to sell the assets. The proposed Final Judgment also requires that, until the divestitures mandated by the Final Judgment have been accomplished, the defendants must maintain and operate the St. Paul Pioneer Press as an active competitor, maintain the management, staffing, sales, and marketing of St. Pioneer Pioneer Press and fully maintain the St. Paul Pioneer Press in operable condition.

The plaintiff and the defendants have stipulated that the proposed Final Judgment may be entered after compliance with the APPA. Entry of the proposed Final Judgment would terminate this action, except that the Court would retain jurisdiction to construe, modify, or enforce the provisions of the proposed Final Judgment and to punish violations thereof.

II. The Alleged Violation

A. The Defendants

McClatchy is a Delaware corporation with its headquarters in Sacramento, California.

McClatchy publishes twelve (12) daily newspapers throughout the United States. In the Minneapolis/St. Paul metropolitan area, McClatchy owns and operates the Star Tribune. McClatchy had revenues of approximately $1.2 billion during 2005.

Knight-Ridder is a Florida corporation with its headquarters in San Jose, California. Knight-Ridder publishes thirty-two (32) daily newspapers throughout the United States. In the Minneapolis/St. Paul metropolitan area, Knight-Ridder owns and operates the St. Paul Pioneer Press. Knight-Ridder had revenues of approximately $3 billion during 2005.

B. Description of the Events Giving Rise to the Alleged Violation

On March 12, 2006, McClatchy and Knight-Ridder entered into an ''Agreement and Plan of Merger between The McClatchy Company and Knight-Ridder, Inc.'' (''Merger Agreement''). Pursuant to that agreement, (1) Knight-Ridder would merge with and into McClatchy; (2) Knight-Ridder would cease to exist as a separate corporate entity; and (3) McClatchy would continue to operate as the sole surviving company. As consideration for the merger, each share of Knight-Ridder common stock would be exchanged for cash and stock, for an aggregate transaction value in excess of $4 billion.

The Star Tribune and the St. Paul Pioneer Press compete head-to-head in the sale of local daily newspapers in the Minneapolis/St. Paul metropolitan area and compete head-to-head in the sale of advertising in these local daily newspapers. They compete for readers so that they can better compete for advertisers. The proposed merger, and the threatened loss of competition that would be caused by it, precipitated the government's suit.

C. Anticompetitive Consequences of the Proposed Transaction

1. Relevant Market

A. Product Market. The Complaint alleges that the sale of local daily newspapers to readers and the sale of access to those readers to advertisers in such newspapers each constitutes a line of commerce within the meaning of Section 7 of the Clayton Act. From a reader's standpoint, the news stories in local daily newspapers, such as the Star Tribune and the St. Paul Pioneer Press, differ significantly from other sources of news. The news stories are detailed, as compared to the news as reported by radio or television, and the Star Tribune and the St. Paul Pioneer Press cover a wide range of stories of interest to local readers, not just major news highlights. Newspapers, such as the Star Tribune and the St. Paul Pioneer Press, are portable and allow the reader to read the news, advertisements, and other information at his or her own convenience. Readers also value other features of the Star Tribune and

the St. Paul Pioneer Press, such as calendars of local events and meetings, movie and TV listings, classified advertisements, commercial advertisements, legal notices, comics, syndicated columns, and obituaries. Reader of the Star Tribune and the St. Paul Pioneer Press do not consider weekly newspapers, radio news, television news, or Internet news to be adequate substitutes for local daily newspapers. If the merged firm were to impose a small but significant and nontransitory increase in the price of advertisements in local daily newspapers, it would lose too few sales to make the price increase unprofitable.

From an advertiser's standpoint, there is no alternative to purchasing advertisements from local daily papers. Advertising in the Star Tribune and the St. Paul Pioneer Press allows advertisers to reach a broad cross-section of consumers in the Minneapolis/St. Paul metropolitan area with a detailed message in a timely manner. A substantial portion of defendants' advertisers do not consider other types of advertising, such as advertising in weekly newspapers, on radio, on television, or on the Internet as adequate substitutes for advertising in a local daily newspaper. In the Minneapolis/St. Paul metropolitan area, the Star Tribune and the St. Paul Pioneer Press provide advertisers the best vehicle to advertise the price of their goods or services in a timely manner. If the merged firm were to impose a small but significant and nontransitory increase in the price of advertising in local daily newspapers, it would lose too few sales to make the price increase unprofitable.

B. Geographic Market. The Complaint alleges that the Minneapolis/St. Paul metropolitan area in the state of Minnesota is a section of the country, or a relevant geographic market, within the meaning of Section 7 of the Clayton Act. The Star Tribune and the St. Paul Pioneer Press are both produced, published, and distributed in the Minneapolis/St. Paul metropolitan area. The Star Tribune and the St. Paul Pioneer Press target readers in the Minneapolis/St. Paul metropolitan area. Both papers provide news relating to the Minneapolis/St. Paul metropolitan area in addition to state and national news. Together, the Star Tribune and the St. Paul Pioneer Press generate approximately 80 percent of their total circulation from the Minneapolis/St. Paul metropolitan area.

Local daily newspapers that serve areas outside of the Minneapolis/St. Paul metropolitan area do not provide local news specific to the Minneapolis/St. Paul metropolitan area. From a readers's standpoint, local daily newspapers serving areas outside of the Minneapolis/St. Paul metropolitan area are not acceptable substitutes for the Star Tribune and the St. Paul Pioneer Press. If the merged firm were to impose a small but significant and nontransitory increase in the price of local daily newspapers serving the Minneapolis/St. Paul metropolitan area, it would lose too few sales to make the price increase unprofitable.

From the standpoint of an advertiser selling goods or services in the Minneapolis/St. Paul metropolitan area, advertising in local daily newspapers serving areas outside of the Minneapolis/St. Paul metropolitan area are not acceptable substitutes for the Star Tribune and the St. Paul Pioneer Press. If the merged firm were to impose a small but significant and nontransitory increase in the price of local daily newspapers serving the Minneapolis/St. Paul metropolitan area, it would lose too few sales to make the price increase unprofitable.

2. Competitive Effects

A. Harm to Readers. The Complaint alleges that, in the Minneapolis/St. Paul metropolitan area, the merger of McClatchy and Knight-Ridder would lessen competition substantially and tend to create a monopoly in market for local daily newspapers. The Star Tribune and the St. Paul Pioneer Press are each other's primary competitor in the sale of local daily newspapers in the Minneapolis/St. Paul metropolitan area, competing aggressively for readers. Their head-to-head competition has given readers in the Minneapolis/St. Paul metropolitan area higher quality news coverage, better service, and lower prices. A combination of these two newspapers under common ownership and control would substantially reduce or eliminate that competition and would decrease incentives of the merged firm to maintain high levels of quality and service.

The proposed transaction would create further market concentration in an already concentrated market for local daily newspapers. The merged firm would control the only two daily local newspapers in the Minneapolis/St. Paul metropolitan area, the Star Tribune and the St. Paul Pioneer Press, with a market share position of almost 100 percent, as measured by local daily newspaper circulation. Prior to the merger, the Star Tribune had the highest market share in the Minneapolis/St. Paul metropolitan area, with approximately 72 percent of readers. The only other local daily newspaper competitor of the merged firm in the Minneapolis/St. Paul metropolitan area, the Stillwater Gazette, had a market share of less than one percent of readers. According to the Herfindahl-Hirschman Index (''HHI''), a widely-used measure of market concentration defined and explained in Exhibit A, the combination of the Star Tribune and the St. Paul Pioneer Press under common ownership and control would create a monopoly and yield a post-merger HHI of approximately 9,900, representing an increase of roughly 4,488 points for daily circulation. For Sunday circulation, at the combination of the Star Tribune and the St. Paul Pioneer Press would yield an HHI of approximately 10,000, an increase of roughly 4,050 points.

B. Harm to Advertisers. The Complaint also alleges that, in the Minneapolis/St. Paul metropolitan area, the merger of McClatchy and Knight would lessen competition substantially and tend to create a monopoly in the market for advertising in local daily newspapers. The Star Tribune and the St. Paul Pioneer Press are each other's primary competitor in the sale of advertising in local daily newspapers in the Minneapolis/St. Paul metropolitan area, the create a monopoly in the market for advertising local daily newspapers in the Minneapolis/St. Paul metropolitan area, competing aggressively for the business of advertisers in that area. Their head-to-head competition has been instrumental in giving advertisers in the Minneapolis/St. Paul metropolitan area higher quality advertising better service, and lower prices. A combination of these two newspapers under common ownership and control would substantially reduce or eliminate that competition.

The proposed transaction would create further market concentration in an already concentrated market for advertising in local daily newspapers. If the two papers combine under common ownership and control, the combined city would control virtually 100 percent of the sales of advertisements in local daily newspapers serving the Minneapolis/St. Paul metropolitan area. Prior to the merger, the Star Tribune generated $308 million, or approximately 68 percent, in total local daily newspaper advertising revenues. The St. Paul Pioneer Press generated $140 million, or approximately 32 percent, in tota1 local daily newspaper advertising revenues. The vast majority of these advertising revenues come from advertisers seeking to reach readers in the Minneapolis/St. Paul metropolitan area.

The proposed Final Judgment would leave the merged firm in control of the Star Tribune, but not the St. Paul Pioneer Press. As a result readers will not be harmed as the separate owners of the Star Tribune and the St. Paul Pioneer Press will still have an economic incentive to compete against each other and capture the other company readers by offering lower prices and a better product. In addition, advertisers will not be harmed as the separate owners of the Star Tribune and the St. Paul Pioneer Press will still have an economic incentive to compete against each other for additional advertising dollars by offering lower rates, discounts off the rate cards, and better service. The proposed Final Judgment will preserve the premerger competitive situation in which readers and advertisers have two local daily newspapers in the Minneapolis/St. Paul metropolitan area from which to choose.

3. Entry

Entry by local daily newspapers in the Minneapolis/St. Paul metropolitan area is time-consuming and difficult, and is not likely to eliminate the anticompetitive effects of the merger by constraining the market power of the combined entity in the near-term, or in the foreseeable future. Local daily newspapers incur significant fixed costs, many of which are sunk. Examples of these sunk costs include hiring reporters and editors, news gathering, and marketing the very existence of the new paper, all of which take substantial time. In the event that the entrant fails or exists the newspaper industry, it cannot recover these sunk costs, making entry risky and likely unprofitable. As a result, entry will not be timely, likely, or sufficient to eliminate the competitive harm that would likely result from the proposed merger.

4. Violation Alleged

For all of these reasons, Plaintiff has concluded that the proposed transaction would lessen competition substantially in the

sale of local daily newspapers to readers and in the sale of advertising in such newspapers serving the Minneapolis/St. Paul metropolitan area, and likely result in increased prices and lower service and quality for readers and advertisers. The proposed merger therefore violates of Section 7 of the Clayton Act.

3. Explanation of the Proposed Final Judgment

The proposed Final Judgment would preserve existing competition in the sale of local daily newspapers to readers and in the sale of advertising in such newspapers serving the Minneapolis/St. Paul metropolitan area. It requires the divestiture of the St. Paul Pioneer Press. The divestiture will preserve choices for read less likely that in the relevant market (1) prices will increase for readers, (2) prices will increase for advertisers, (3) the quality of the local daily newspapers will decline or (4) service levels will decline as a result of the transaction.

Unless the United States grants an extension of time, the divestiture must be completed within sixty (60) calendar days after the filing of the Complaint in this matter or five (5) calender days after notice of the entry of this Final Judgment by the Court, whichever is later. Until the divestiture takes place, McClatchy must maintain and operate the St. Paul Pioneer Press as an active competitor to the Star Tribune, maintain the management, staffing, sales, and marketing of the St. Paul Pioneer Press, and fully maintain St. Paul Pioneer Press in operable condition.

The divestiture must be to a purchaser or purchasers acceptable to the United States in its sole discretion. Unless the United States otherwise consents in writing, the divestiture shall include all the assets of the St. Paul Pioneer Press, and shall be accomplished in such a way as to satisfy the United States that such assets can and will be used as a viable local daily newspaper.

If Defendant McClatchy fails to divest the St. Paul Pioneer Press within the time periods specified in the Final Judgment, the Court, upon, application of the United States, is to appoint a trustee nominated by the United States to effect the divestitures. If a trustee is appointed, the proposed Final Judgment provides that McClatchy will pay all costs and expenses of the trustee and any professionals and agents retained by the trustee. Under Section V(d) of the propose Final Judgment, the compensation paid to the trustee and any persons retained by the trustee shall be both reasonable in light of the value of the St. Paul Pioneer Press, and based on a fee arrangement providing the trustee with an incentive based on the price and terms of the divestitures and the speed with which they are accomplished. Timeliness is paramount. After appointment, the trustee will file monthly reports with the parties and the Court, setting forth the trustee's efforts to accomplish the divestitures ordered under the proposed Final Judgment. Section V(g) of the proposed Final Judgment provides that if the trustee has not accomplished the divestitures within four (4) months after its appointment, the trustee shall promptly file with the Court a report setting forth (1) the trustee's efforts to accomplish the required divestitures, (2) the reasons, in the trustee's judgment, why the required divestitures have not been accomplished and (3) the trustee's recommendations. At the same time the trustee will furnish such report to the plaintiff and defendants, who will each have the right to be heard and to make additional recommendations.

4. Remedies Available to Potential Private Litigants

Section 4 of the Clayton Act, 15 U.S.C. 15, provides that any person who has been injured as a result of conduct prohibited by the antitrust laws may bring suit in federal court to recover three times the damages the person has suffered, as well as costs and reasonable attorneys' fees. Entry of the proposed Final Judgment will neither impair nor assist the bringing of any private antitrust damage action. Under the provisions of Section 5(a) of the Clayton Act, 15 U.S.C. 16(a), the proposed Final Judgment has no prima facie effect in any subsequent private lawsuit that may be brought against defendants.

5. Procedures Available for Modification of the Proposed Final Judgment

Plaintiff and defendants have stipulated that the proposed Final Judgment may be entered by the Court after compliance with the provisions of the APPA, provided that plaintiff has not withdrawn its consent. The APPA conditions entry upon the Court's determination that the proposed Final Judgment is in the public interest.

The APPA provides a period of at least sixty (60) days preceding the effective date of the proposed Final Judgment within which any person may submit to plaintiff written comments regarding the proposed Final Judgment. Any person who wishes to comment should do so within sixty (60) days of the date of publication of this Competitive Impact Statement in the **Federal Register**. All comments received during this period will be considered by the Department of Justice, which remains free to withdraw its consent to the proposed Final Judgment at any time prior to the Court's entry of judgment. The comments and the response of plaintiff will be filed with the Court and published in the **Federal Register.**

Written comments should be submitted to: John R. Read, Chief, Litigation III, Antitrust Division, United States Department of JustIce, 325 7th Street, NW., Suite 300, Washington, DC 20530.

The proposed Final Judgment provides that the Court retains jurisdiction over this action, and the parties may apply to the Court for any order necessary or appropriate for the modification, interpretation, or enforcement of the Final Judgment.

6. Alternatives to the Proposed Final Judgment

Plaintiff considered, as an alternative to the proposed Final Judgment, a full trial on the merits against Defendants. Plaintiff could have continued the litigation and sought preliminary and permanent injunctions against McClatchy's acquisition of Knight-Ridder. Plaintiff is satisfied, however, that the divestiture of assets and other relief described in the proposed Final Judgment will preserve competition in the sale of local daily newspapers to readers and in the sale of advertising in such newspapers serving the Minneapolis/St. Paul metropolitan area as identified in the Complaint.

7. Standard of Review Under the APPA for Proposed Final Judgment

The APPA requires that proposed consent judgments in antitrust cases by the United States be subject to a sixty (60) day comment period, after which the Court shall determine whether entry of the proposed Final Judgment ''is in the public interest.'' In making that determination, the Court shall consider:

(A) The competitive impact of such judgment, including termination of alleged violations, provisions for enforcement and modification, duration or relief sought, anticipated effects of alternative remedies actually considered and any other considerations bearing upon the adequacy of such judgment;

(B) The impact of entry of such judgment upon the public generally and individuals alleging specific injury from the violations set forth in the complaint including consideration of the public bene t, if any, to be derived from a determination of the issues at trial.

15 U.S.C. 16(e)(l)(A) & (B). As the United states Court of Appeals for the D.C. Circuit held, this statute permits a court to consider, among other things, the relationship between the remedy secured and the specific allegations set forth in the government's complaint, whether the decree is sufficiently clear, whether enforcement mechanisms are sufficient and whether the decree may positively harm third parties. See *United States* v. *Microsoft*, S6 F.3d 1448, 1461–62 (D.C. Cir. 1995).

''Nothing in this section shall be construed to require the court to conduct an evidentiary hearing or to require the court to permit anyone to intervene.'' 15 U.S.C. 16(e)(2). Thus, in conducting this inquiry, ''[t]he Court is nowhere compelled to go to trial or to engage in extended proceedings which might have the effect of vitiating the benefits of prompt and less costly settlement through the consent decree process.'' [1] Rather,

[a]bsent a showing of corrupt failure of the government to discharge its duty, the Court, in making its public interest finding, should * * * carefully consider the explanations of the government in the competitive impact statement and its responses to comments in order to determine whether those explanations are reasonable under the circumstances.

[1] 119 Congo Rec. 24598 (1973) (statement of Senator Tunney). See *United States* v. *Gillette Co.*, 406 F. Supp. 713, 715 (D. Mass. 1975). A ''public interest'' determination can be made properly on the basis of the Competitive Impact Statement and Response to Comments filed pursuant to the APPA. Although the APPA authorizes the use of additional procedures, 15 U.S.C. § 16(f), those procedures are discretionary. A court need not invoke any of them unless it believes that the comments have raised significant issues and that further proceedings would aid the court in resolving those issues. See H.R. Rep. 93–1463, 93rd Cong. 2d Sess. 8–9 (1974), reprinted in U.S.C.C.A.N. 6535, 6538.

United States v. *Mid-America Dairymen. Inc.*, 977–1 Trade Cas. ¶ 61,508, at 71,980 (W.D. Mo. 1977).

Accordingly, with respect to the adequacy of the relief secured by the decree, a court may not ''engage in an unrestricted evaluation of what relief would best serve the public.'' *United States* v. *BNS. Inc.*, 858 F.2d 456, 462 (9th Cir. 1988), citing *United States* v. *Bechtel Corp.*, 648 F.2d 660, 666 (9th Cir.), cert. denied, 454 U.S. 11083 (1981); see also Microsoft, 56 F.3d at 1460–62. Precedent requires that:

The balancing of competing social and political interests affected by a proposed antitrust consent decree must be left, in the first instance, to the discretion of the Attorney General. The court's role in protecting the public interest is one of insuring that the government has not breached its duty to the public in consenting to the decree. The court is required to determine not whether a particular decree is the one that will best serve society, but whether the settlement is ''*within the reach of the public interest.*'' More elaborate requirements might undermine the effectiveness of antitrust enforcement by consent decree.[2]

Bechtel, 648 F .2d at 666 (citations omitted) (emphasis added).

Court approval of a final judgment requires a standard more flexible and less strict than the standard required for a finding of liability. ''[A] proposed decree must be approved even if it falls short of the remedy the court would impose on its own, as long as it falls within the range of acceptability or is 'within the reaches of public interest.' '' *United States* v. *American Tel. and Tel. Co.*, 552 F. Supp. 131, 151 (D.D.C. 1982), aff'd. sub nom. *Maryland* v. *United States*, 460 U.S. 1001 (1983), quoting Gillette Co., 406 F. Supp. at 716 (citations omitted); *United States* v. *Alcan Aluminum, Ltd.*, 605 F. Supp. 619, 622 (W.D. Ky. 1985). Moreover, the Court's role under the APPA is limited to reviewing the remedy in relationship to the violations that the United States has alleged in its Complaint, and does not authorize the Court to ''construct [its] own hypothetical case and then evaluate the decree against that case.'' Microsoft, 56 F.3d at 1459. Because the ''court's authority to review the decree depends entirely on the government's exercising its prosecutorial discretion by bringing a case in the first place,'' it follows that ''the court is only authorized to review the decree itself,'' and not to ''effectively redraft the complaint'' to inquire into other matters that the United States did not pursue. *Id.* at 1459–60.

[2] Cf. BNS. 858 F.2d at 464; 858 F.2d at 64 (bolding that the court's ''ultimate authority under the [APP A] is limited to approving or disapproving the consent decree''); Gillette, 406 F. Supp. at 716 (noting that, in this way, the court s constrained to ''look at the overall picture not hypercritically, nor with a microscope, but with artist's reducing glass''); see generally Microsoft, 56 F.3d at 1461 (discussing whether 'the remedies [obtained in the decree are) so inconsonant with the allegations charged as to fall outside of the 'reaches of the public interest' '').

VIII. Determinative Document

There are no determinative materials or documents within the meaning of the APPA that were considered by the plaintiff in formulating the proposed Final Judgment.

Dated: June 27, 2006.

Respectfully submitted,

Gregg I. Malawer (D.C. Bar #481685), U.S. Department of Justice Antitrust Division, 325 7th Street, NW., Suite 300, Washington, DC 20530, (202) 514–0230, Attorney for Plaintiff the United States.

Exhibit A—Definition of HHI and Calculations for Market

''HHI'' means the Herfindahl-Hirschm Index, a commonly accepted measure of market concentration. It is calculated by squaring the market share of each firm competing in the market and then summing the resulting numbers. For example, for a market consisting of four firms with shares of thirty, thirty, twenty and twenty percent, the HHI is 2600 ($30^2 + 30^2 + 20^2 + 20^2 = 2600$). The HHI takes into account the relative size and distribution of the firms in a market and approaches zero when a market consists of a large number of firms of relatively equal size. The HHI increases both as the number of firms in the market decreases and as the disparity in size between those firms increases.

Markets in which the HHI is between 1000 and 1800 points are considered to be moderately concentrated, and those in which the HHI is in excess of 1800 points are considered to be concentrated. Transactions that increase the HHI by more than 100 points in concentrated markets presumptively raise antitrust concerns under the Merger Guidelines. See Merger Guidelines § 1.51.

[FR Doc. 06–6362 Filed 7–19–06; 8:45 am]

BILLING CODE 4410–11–M

DEPARTMENT OF JUSTICE

Antitrust Division

Notice Pursuant to the National Cooperative Research and Production Act of 1993—DVD Copy Control Association

Notice is hereby given that, on June 22, 2006, pursuant to Section 6(a) of the National Cooperative Research and Production Act of 1993, 15 U.S.C. 4301 *et seq.* (''the Act''), DVD Copy Control Association (''DVD CCA'') has filed written notifications simultaneously with the Attorney General and the Federal Trade Commission disclosing changes in its membership. The notifications were filed for the purpose of extending the Act's provisions limiting the recovery of antitrust plaintiffs to actual damages under specified circumstances. Specifically, BeyondWiz Co., Ltd., Seongnam, Republic of Korea; CD Video Manufacturing, Inc., Santa Ana, CA; Hong Kong KONKA Ltd., Hong Kong, Hong Kong-China; Kawai Musical Instruments Mfg. Co., Ltd., Shizuoka, Japan; Shenzhen Mizuda AV Co., Ltd., Shenzhen, People's Republic of China; Teltron S.A.,Buenos Aires, Argentina; and Toyo Recording Co., Ltd., Tokyo, Japan have been added as parties to this venture.

Also, CIS Technology, Inc., Taipei Hsien, Taiwan; and Encentrus Systems Inc., Pointe-Claire, Quebec, Canada have withdrawn as parties to this venture. In addition, Favor Digital Technology Co., Ltd. has changed its name to Major Digital Technology Co., Ltd., Jiang Xi, People's Republic of China.

No other changes have been made to either the membership or planned activity of the group research project. Membership in this group research project remains open, and DVD CCA intends to file additional written notification disclosing all changes in membership.

On April 11, 2001, DVD CCA filed its original notification pursuant to Section 6(a) of the Act. The Department of Justice published a notice in the **Federal Register** pursuant to Section 6(b) of the Act on August 3, 2001 (66 FR 40727).

The last notification was filed with the Department on March 16, 2006. A notice was published in the **Federal Register** pursuant to Section 6(b) of the Act on April 12, 2006 (71 FR 18769).

Dorothy B. Fountain,

Deputy Director of Operations, Antitrust Division.

[FR Doc. 06–6359 Filed 7–19–06; 8:45 am]

BILLING CODE 4410–11–M

DEPARTMENT OF JUSTICE

Antitrust Division

Notice Pursuant to the National Cooperative Research and Production Act of 1993—Network Centric Operations Industry Consortium, Inc.

Notice is hereby given that, on June 20, 2006, pursuant to Section 6(a) of the National Cooperative Research and Production Act of 1993, 15 U.S.C. 4301 *et seq.* (''Act''), Network Centric Operations Industry Consortium, Inc. has filed written notifications simultaneously with the Attorney General and the Federal Trade Commission disclosing changes in its membership. The notifications were filed for the purpose of extending the Act's provisions limiting the recovery of antitrust plaintiffs to actual damages under specified circumstances. Specifically, American Red Cross, Washington, DC; Open Geospatial

Consortium, Inc., Wayland, MA; Management and Engineering Technologies International, Inc., El Paso, TX; Gallium Software Inc., Ottawa, Ontario, Canada; and SPARTA, Inc., Arlington, VA have been added as parties to this venture. Also, West Virginia High Technology Consortium Foundation, Fairmont, WV; MBL International, Ltd., Annandale, VA; Crystal Group, Inc., Hiawatha, IA; and FlightSafety International, Flushing, NY have withdrawn as parties to this venture.

No other changes have been made in either the membership or planned activity of the group research project. Membership in this group research project remains open, and Network Centric Operations Industry Consortium, Inc. intends to file additional written notification disclosing all changes in membership.

On November 19, 2004, Network Centric Operations Industry Consortium, Inc. filed its original notification pursuant to Section 6(a) of the Act. The Department of Justice published a notice in the **Federal Register** pursuant to Section 6(b) of the Act on February 2, 2005 (70 FR 5486).

The last notification was filed with the Department on April 10, 2006. A notice was published in the **Federal Register** pursuant to Section 6(b) of the Act on May 10, 2006 (71 FR 27280).

Dorothy B. Fountain,

Deputy Director of Operations, Antitrust Division.

[FR Doc. 06–6360 Filed 7–19–06; 8:45 am]

BILLING CODE 4410–11–M

DEPARTMENT OF JUSTICE

Antitrust Division

Notice Pursuant to the National Cooperative Research and Production Act of 1993—Semiconductor Test Consortium, Inc.

Notice is hereby given that, on May 10, 2006, pursuant to Section 6(a) of the National Cooperative Research and Production Act of 1993, 15 U.S.C. 4301 *et seq.* (''the Act''), Semiconductor Test Consortium, Inc. has filed written notifications simultaneously with the Attorney General and the Federal Trade Commission disclosing changes in its membership. The notifications were filed for the purpose of extending the Act's provisions limiting the recovery of antitrust plaintiffs to actual damages under specified circumstances. Specifically, BitifEye, Boeblingen, Germany; ERS Electronic, Munich, Germany; Q-Star Test, Brugge, Belgium; and Sept Europe, Munich, Germany have been added as parties to this venture.

No other changes have been made in either the membership or planned activity of the group research project. Membership in this group research project remains open, and Semiconductor Test Consortium, Inc. intends to file additional written notification disclosing all changes in membership.

On May 27, 2003, Semiconductor Test Consortium, Inc. filed its original notification pursuant to Section 6(a) of the Act. The Department of Justice published a notice in the **Federal Register** pursuant to Section 6(b) of the Act on June 17, 2003 (68 FR 35913).

The last notification was filed with the Department on February 21, 2006. A notice was published in the **Federal Register** pursuant to Section 6(b) of the Act on March 7, 2006 (71 FR 13866).

Dorothy B. Fountain,

Deputy Director of Operations, Antitrust Division.

[FR Doc. 06–6358 Filed 7–19–06; 8:45 am]

BILLING CODE 4410–11–M

DEPARTMENT OF TRANSPORTATION

Federal Highway Administration

MORRIS K. UDALL SCHOLARSHIP AND EXCELLENCE IN NATIONAL ENVIRONMENTAL POLICY FOUNDATION

[Docket No. FHWA–2006–25031]

U.S. Institute for Environmental Conflict Resolution; Request for Public Participation in National Outdoor Advertising Control Program Assessment

AGENCIES: Federal Highway Administration (FHWA), DOT and United States Institute for Environmental Conflict Resolution (U.S. Institute).

ACTION: Notice; request for public input on program assessment.

SUMMARY: The FHWA and the U.S. Institute have initiated an assessment of the national outdoor advertising control (OAC) program, which implements the provisions of 23 U.S.C. 131. The goal of the assessment is to reach out, through a neutral entity, to parties interested in OAC to identify issues that cause controversy, perspectives of the various stakeholders, and appropriate methods for addressing conflicts and improving program results. The U.S. Institute, operating under an interagency agreement with the FHWA, is responsible for carrying out the neutral conflict assessment process. This notice describes the first of several opportunities for public participation in the assessment process. At this time, the public is invited to identify any OAC issues that should be considered during the assessment. The public also is invited to suggest persons or entities with particular interests or expertise in outdoor advertising and the OAC program, that the assessors should consider contacting as a part of the assessment proceedings.

DATES: Comments must be received on or before August 21, 2006.

ADDRESSES:

Comments on OAC Issues

Mail or hand deliver comments about OAC issues that should be considered in the assessment to the U.S. Department of Transportation, Dockets Management Facility, Room PL–401, 400 Seventh Street, SW., Washington, DC 20590, or submit electronically at *http://dms.dot.gov* or fax comments to (202) 493–2251. All comments should include the docket number that appears in the heading of this document.

All comments received will be available for examination and copying at the above address from 9 a.m. to 5 p.m., e.t., Monday through Friday, except Federal holidays. Those desiring notification of receipt of comments must include a self-addressed, stamped postcard or may print the acknowledgement page that appears after submitting comments electronically. Anyone is able to search the electronic form of all comments received into any of DOT's dockets by the name of the individual submitting the comment (or signing the comment, if submitted on behalf of an association, business, labor union, etc.)

Names of Persons or Entities To Be Contacted as Part of the Assessment

Mail or hand deliver suggested names of persons or entities to be contacted as part of the assessment to the Morris K. Udall Foundation, U.S. Institute for Environmental Conflict Resolution, attn: Ms. Gail Brooks, 130 South Scott Avenue, Tucson, AZ 85701, or submit electronically by e-mail to *oac@ecr.gov,* or fax to (510) 670–5530. Contact information for such persons or entities, if available to the submitter, should be included in the submission.

Names and contact information for such persons or entities should be provided only to the U.S. Institute as directed above in order to protect the privacy of the persons or entities

suggested. Do not include name and contact information with comments about OAC issues to be filed with the DOT Document Management Facility. Persons making comments may review DOT's complete Privacy Act Statement in the **Federal Register** published April 11, 2000 (Volume 65, Number 70, Pages 19477–78), or may visit *http://dms.dot.gov.*

FOR FURTHER INFORMATION CONTACT: For the FHWA: Mr. Gerald Solomon, Office of Real Estate Services (HEPR), (202) 366–2019, *gerald.solomon@dot.gov*; for legal questions, Mr. Robert Black, Office of Chief Counsel (HCC), (202) 366–1359, *robert.black@dot.gov;* Federal Highway Administration, 400 Seventh Street, SW., Washington, DC 20590. For the U.S. Institute: Dale Keyes, Senior Program Manager, *keyes@ecr.gov,* (520) 670–5653 or Gail Brooks, Program Associate, *brooks@ecr.gov,* (520) 670–5299; U.S. Institute for Environmental Conflict Resolution, 130 South Scott Avenue, Tucson, AZ 85701. Business hours for the Federal Highway Administration are 7:45 a.m. to 4:15 p.m. (e.t.), Monday through Friday, except Federal holidays.

SUPPLEMENTARY INFORMATION:

Electronic Access

You may submit or retrieve comments online through the Docket Management System (DMS) at *http://dms.dot.gov/submit.* The DMS is available 24 hours each day, 365 days a year. Electronic submission and retrieval help and guidelines are available under the help section of the Web site.

An electronic copy of this notice may be downloaded using a computer, modem and suitable communications software from the Government Printing Office's Electronic Bulletin Board Service at (202) 512–1661. Internet users may reach the Office of the Federal Register's home page at *http://www.archives.gov* and the Government Printing Office's Web site at *http://www.access.gpo.gov.*

Background

The U.S. Congress adopted the first Federal legislation pertaining to the control of outdoor advertising signs (signs) near Federal-aid highways in the Federal-Aid Highway Act of 1958. That legislation established the voluntary Bonus Program to control outdoor advertising signs within 660 feet of the Interstate System. The Bonus Program provided a monetary incentive to the States to adopt programs that controlled outdoor advertising in accordance with national standards specified in the legislation.

In 1965, Congress passed the Highway Beautification Act (HBA), 23 U.S.C. 131, which substantially amended the original law and today governs the Federal outdoor advertising control program. Unlike the Bonus Program, States are required to comply with the HBA. The first section of the HBA sets forth the basic program objectives: ''The erection and maintenance of outdoor advertising signs, displays, and devices in areas adjacent to the Interstate System and the primary system should be controlled in order to protect the public investment in such highways, to promote the safety and recreational value of public travel, and to preserve natural beauty.'' The FHWA promulgated regulations in 1973, which appear in parts 180 and 750 of title 23, Code of Federal Regulations (CFR). Most provisions of the HBA and the regulations have remained largely unchanged since their original adoption.

Under the HBA, States are responsible for implementing the OAC program in a manner consistent with the Federal law and regulations. Failure by a State to maintain effective control can result in the withholding of a portion of the State's Federal-aid highway funds. Most States have assigned administrative responsibility for OAC to their transportation agencies.

The HBA requires States to develop standards governing various aspects of the program, and mandates compensation to sign owners when a State's action in removing a sign constitutes a regulatory taking. Pursuant to the HBA, there are areas in which signs can be legally erected, areas where they cannot be erected, and limitations on the size, lighting, and spacing of signs. Signs erected legally prior to the adoption of the regulatory controls with which they do not conform were given limited ''grandfathering'' protection as non-conforming signs. The law affirmatively requires States to remove illegal signs, which do not comply with applicable laws and regulations and are not grandfathered.

Since the adoption of the HBA and the implementing regulations, there have been substantial changes in relevant practices, technologies, and local conditions. As a result, many of those affected by the OAC program see an increasing gap between current Federal law and regulations and the needs of States, local communities, advertisers, sign owners, owners of properties on which signs are located, interest groups, and the traveling public. Enforcement of Federal and State laws, and the interface between OAC and local zoning laws, create challenges across the country. These difficulties raise questions about the effectiveness of the current national OAC program.

The FHWA wishes to better understand the nature and complexity of the conflicts that have developed in connection with the HBA, and what paths toward resolution are available. The FHWA requested assistance with this effort from the U.S. Institute, which specializes in environmental conflict assessment and resolution.

In accordance with its statutory authority, the 1998 Environmental Policy and Conflict Resolution Act (Pub. L. 105–156, codified at 20 U.S.C. 5601 *et seq.*), the U.S. Institute will conduct a comprehensive and neutral conflict assessment of the OAC program. The U.S. Institute will serve an independent and impartial role, accountable to all the interested parties and participants. Confidentiality of all private conversations will be protected. The U.S. Institute will oversee the assessment process, and has contracted with the Osprey Group, a private conflict resolution company, to gather information and conduct other aspects of the assessment, and to prepare the assessment report. For more information on the U.S. Institute, please visit *http://www.ecr.gov.*

The goal of the OAC program neutral conflict assessment is to identify areas of conflict, stakeholders affected by or interested in the issues, the stakeholders' positions and proposed solutions, and their willingness to engage in efforts to address and resolve the issues. The assessment will be accomplished through discussions with key stakeholders (individually or in groups) and public listening sessions.

The assessment report prepared by the U.S. Institute and the Osprey Group will convey findings and identify options for future action, including whether a future collaborative problem-solving process would be appropriate. The final product will contain a set of recommendations from the assessors for actions by the FHWA and others to address OAC program conflicts. After the U.S. Institute submits its assessment report, the FHWA will place a copy of the report in the docket. Additionally, the FHWA will announce in the **Federal Register** availability of this report and ask for public comments on the report.

The OAC program assessment process will offer public participation opportunities in several ways. The first is this request for public comments about which issues the assessment should consider and who should be considered for inclusion in discussion activities. There also will be public listening sessions in several cities around the country, at which any

member of the public may attend and provide information. An announcement of the dates, times, and locations of those sessions will be posted in the docket, available as described above. After consideration of the assessment report and public comments on it, the FHWA will file in the same docket a summary of its review of the results of the OAC program neutral conflict assessment.

Information on the FHWA OAC program is available online at *http://www.fhwa.dot.gov/realestate/out_ad.htm* or by contacting the FHWA at the address listed above. Additional OAC resources include: National Alliance of Highway Beautification Agencies, *http://www.nahba.org/;* Outdoor Advertising Association of America, *http://www.oaaa.org;* and Scenic America, *http://www.scenic.org/.*

Comments received after the comment closing date will be filed in the docket and will be considered to the extent practicable. In addition to late comments, the FHWA also will continue to file in the docket relevant information that becomes available after the closing date, and interested persons should continue to examine the docket for new material. Names of persons or entities that the assessors should consider contacting as part of the assessment that are received by the U.S. Institute after the comment closing date also will be considered to the extent practicable.

(Authority: 23 U.S.C. 131; 20 U.S.C. 5601 *et seq.*)

Issued on: July 13, 2006.

Christopher L. Helms,

Executive Director, Morris K. Udall Scholarship and Excellence in National Environmental Policy Foundation.

Frederick G. Wright, Jr.,

Federal Highway Executive Director.

[FR Doc. 06–6355 Filed 7–19–06; 8:45 am]

BILLING CODE 4910–22–P

NATIONAL AERONAUTICS AND SPACE ADMINISTRATION

[Notice 06–046]

National Environmental Policy Act; Crew Exploration Vehicle

AGENCY: National Aeronautics and Space Administration (NASA).

ACTION: Notice of availability of the Draft Environmental Assessment (EA) for the Development of the Crew Exploration Vehicle (CEV).

SUMMARY: Pursuant to the National Environmental Policy Act of 1969, as amended (NEPA) (42 U.S.C. 4321 *et seq.*), the Council on Environmental Quality Regulations for Implementing the Procedural Provisions of NEPA (40 CFR parts 1500–1508), and NASA policy and procedures (14 CFR part 1216 subpart 1216.3), NASA has prepared and issued a Draft EA for the Development of the CEV. The Proposed Action is to develop a new human-rated space vehicle, the CEV, which would be the U.S. vehicle to transport humans to Low-Earth Orbit and to the International Space Station, Moon, Mars, and to destinations beyond. The Draft EA addresses the potential environmental impacts associated with the development of the CEV, including its design, component fabrication, and assembly. However, it does not cover flight testing and operation of the CEV, which will be the subject of future NEPA documentation. The only alternative to the Proposed Action discussed in detail is the No Action Alternative where NASA would not develop the CEV.

The CEV would be able to transport up to six humans and cargo to space after the Space Shuttle is retired, which is currently scheduled to occur no later than 2010. First human flight involving the CEV is planned for no later than 2014 with initial access to Low-Earth Orbit and to the International Space Station. Human missions to the Moon are planned for no later than 2020 with missions to Mars and other destinations in the following decades. The CEV would likely be launched from NASA's Kennedy Space Center in Florida.

DATES: Written comments on the Draft EA must be received by NASA on or before August 21, 2006.

ADDRESSES: Written comments should be addressed to Mr. Mario Busacca, Mail Stop: TA–C3, Lead, Planning and Special Projects, Environmental Program Office, NASA, Kennedy Space Center, FL 32899. Although hardcopy comments are preferred, comments may be sent by electronic mail to Mario Busacca at *mario.busacca-1@nasa.gov* or by facsimile at 321–867–8040.

The Draft EA can be reviewed at the following NASA locations:

(a) NASA Headquarters, Library, Room 1J20, 300 E Street, SW., Washington, DC 20546–0001;

(b) Jet Propulsion Laboratory, Visitors Lobby, Building 249, 4800 Oak Grove Drive, Pasadena, CA 91109.

Hard copies of the Draft EA also may be reviewed at other NASA Centers (see **SUPPLEMENTARY INFORMATION** below).

Limited hard copies of the Draft EA are available, on a first request basis, by contacting Mr. Mario Busacca at the address or telephone number indicated below. The Draft EA is also available at *http://exploration.nasa.gov/documents/cev_draftea.html.*

FOR FURTHER INFORMATION CONTACT: Mario Busacca, Mail Stop: TA–C3, Lead, Planning and Special Projects Environmental Program Office, NASA, Kennedy Space Center, FL 32899; telephone 321–867–8456, electronic mail *mario.busacca-1@nasa.gov*, or facsimile 321–867–8040.

SUPPLEMENTARY INFORMATION: In his January 14, 2004 address to the Nation, President George W. Bush announced a new vision for space exploration. In pursuing this new vision, NASA has been tasked with developing the spacecraft, launch vehicles, and related technologies necessary to travel and explore the solar system. The CEV represents an important building block in this future exploration architecture.

The CEV, an Apollo-like capsule, would consist of a Crew Module, a Service Module, and a Launch Escape System. If NASA proceeds with CEV development, the Agency would contract with a commercial firm to serve as the prime contractor, with specific design, component fabrication, and assembly activities to be clarified as the CEV Project matures. CEV development activities would occur at multiple NASA facilities including, but not necessarily limited to, Johnson Space Center in Houston, Texas; Ames Research Center in Mountain View, California; Marshall Space Flight Center in Huntsville, Alabama; Glenn Research Center in Cleveland, Ohio; Langley Research Center in Hampton, Virginia; and Kennedy Space Center; and at yet to be named commercial facilities throughout the United States. These activities would be expected to be consistent with each facility's mission statement and scope of normal operations.

Environmental impacts associated with the development of the CEV would be expected to be minor (i.e., within the permitted quantities of airborne emissions, waterborne effluents, and waste disposal at each of the involved facilities) and consequently both the short- and long-term environmental impacts are expected to be within the limits of all applicable environmental statutes, regulations, permits, and licenses. No adverse impact on the local infrastructure (e.g., utilities, roadways) near the involved facilities is anticipated. There should be little incremental impact on employment levels at the facilities involved in CEV development. Thus little or no

incremental socioeconomic impacts to regional economies are anticipated.

The Draft EA may be examined at the following NASA locations by contacting the pertinent Freedom of Information Office:

(a) NASA, Ames Research Center, Moffett Field, CA 94035 (650–604–3273);

(b) NASA, Dryden Flight Research Center, Edwards, CA 93523 (661–276–2704);

(c) NASA, Glenn Research Center, Cleveland, OH 44135 (216–433–2755);

(d) NASA, Goddard Space Flight Center, Greenbelt, MD 20771 (301–286–4721);

(e) NASA, Johnson Space Center, Houston, TX 77058 (281–483–8612);

(f) NASA, Kennedy Space Center, FL 32899 (321–867–2745);

(g) NASA, Langley Research Center, Hampton, VA 23681 (757–864–2497);

(h) NASA, Marshall Space Flight Center, Huntsville, AL 35812 (256–544–1837); and

(i) NASA, Stennis Space Center, MS 39529 (228–688–2118).

If and when developed, the CEV would undergo testing and flight certification prior to operational use. These actions would be the subject of future NEPA documentation.

Written public input and comments on alternatives and environmental issues and concerns associated with the development of the CEV are hereby requested.

Olga M. Dominguez,

Assistant Administrator for Infrastructure and Administration.

[FR Doc. E6–11522 Filed 7–19–06; 8:45 am]

BILLING CODE 7510–13–P

NATIONAL FOUNDATION ON THE ARTS AND HUMANITIES

Institute of Museum and Library Services, Proposed Collection, Comment Request; Partnership for a Nation of Learners (PNL) Evaluation: Applicants

AGENCY: Institute of Museum and Library Services.

ACTION: Notice.

SUMMARY: The Institute of Museum and Library Services as part of its continuing effort to reduce paperwork and respondent burden, conducts a pre-clearance consultation program to provide the general public and Federal agencies with an opportunity to comment on proposed and/or continuing collections of information in accordance with the Paperwork Reduction Act of 1995 (PRA95) [44 U.S.C. 3508(s)(A)]. This program helps to ensure that requested data can be provided in the desired format, reporting burden (time and financial resources) is minimized, collection instruments are clearly understood, and the impact of collection requirements on respondents can be properly assessed. The Institute of Museum and Library Services is currently soliciting comments concerning proposed evaluation research of Partnership for a Nation of Learners (PNL) Round I grant applicants.

A copy of the proposed information collection request can be obtained by contacting the individual listed below in the address section of this notice.

DATES: Written comments must be submitted to the office listed in the addressee section below on or before September 18, 2006.

IMLS is particularly interested in comments that help the agency to:

- Evaluate whether the proposed collection of information is necessary for the proper performance of the functions of the agency, including whether the information will have practical utility;
- Evaluate the accuracy of the agency's estimate of the burden of the proposed collocation of information including the validity of the methodology and assumptions used;
- Enhance the quality, utility and clarity of the information to be collected; and
- Minimize the burden of the collection of information on those who are to respond, including through the use of appropriate automated electronic, mechanical, or other technological collection techniques or other forms of information technology, e.g., permitting electronic submissions of responses.

ADDRESSES: Send comments to: Karen Motylewski, Evaluation Officer, Institute of Museum and Library Services, 1800 M Street, NW., 9th Floor, Washington, DC. Ms. Motylweski can be reached by telephone: 202–653–4686; fax: 202–653–8625; or e-mail: *kmotylewski@imls.gov.*

SUPPLEMENTARY INFORMATION:

Background: The Institute of Museum and Library Services (IMLS) is an independent Federal grant-making agency authorized by the Museum and Library Services Act, Public Law 104–208. IMLS is charged with promoting the improvement of library and museum services for the benefit of the public. Through grant-making and museum services, IMLS seeks to assure that libraries and museums are able to play an active role in cultivating an educated and engaged citizenry. IMLS builds the capacities of libraries and museums by encouraging the highest standards in management, public service, and education; leadership in the use of technology; strategic planning for results, and partnerships to create new networks that support lifelong learning and the effective management of assets. According to its strategic plan, IMLS is dedicated to creating and sustaining a nation of learners by helping libraries and museums serve their communities. Libraries and museums are key resources for education in the United States and promote the vision of a learning society in which learning is seen as a community-wide responsibility supported by both formal and informal educational entities.

Current Actions: The Institute of Museum and Library Services and the Corporation for Public Broadcasting (CPB) are partnering under a Memorandum of Understanding to make competitive grants and support capacity-building for community partnerships among museum, library and public broadcasting outlets and other community organizations to meet locally identified community needs in an initiative titled Partnership for a Nation of Learners (PNL). The initiative includes professional development resources such as videoconferences and Web-based materials for potential applicants, grantees, and their partners. IMLS administers the grants process and CPB contracts for and manages the professional development and initiative-level evaluation functions. IMLS seeks clearance for the partnership to collect and analyze information related to evaluation of the PNL initiative.

Overall, IMLS and CPB expect that as a result of PNL, museums, libraries, and public broadcasters will:

1. Collaborate more frequently.
2. Design and deliver projects that contribute significantly to solving or addressing community needs.
3. Develop skills and knowledge required for effective collaboration.
4. Increase community knowledge of the public value created by library, museum, and public broadcasting initiatives.

PNL awards were made in September 2005 and 2006. As part of the PNL evaluation, a survey will be sent to applicants who did not receive funding.

This survey will give unsuccessful applicants an opportunity to provide feedback to IMLS and CPB on the application process. The evaluation will also yield information on what applicants learned through the application process, their current partnering activity, and their future

interest in learning more about partnering. Information gathered will help IMLS and CPB to identify potential areas for improvement in PNL, determine the level of need/interest for the initiative within the key stakeholder groups, and access the initiative's contribution to local community results and the IMLS and CPB missions.

Agency: Institute of Museum and Library Services.

Title: Partnership for a Nation of Learners (PNL) Evaluation.

OMB Number: Agency Number: 3137.

Frequency: One time.

Affected Public: Personnel of museums, museum organizations, libraries, library organizations, and public broadcasting outlets.

Number of Respondents: 148.

Estimated Time per Respondent: 20 minutes.

Total Burden Hours: 50 hours.

Total Annualized capital/startup costs: 0.

Total Annual costs: 0.

FOR FURTHER INFORMATION CONTACT: Karen Motylewski, Evaluation Officer, Institute of Museum and Library Services, 1800 M Street, NW., 9th Floor, Washington, DC. Telephone: 202–653–4686; fax: 202–653–8625; e-mail: *kmotylewski@imls.gov.*

Dated: July 17, 2006.

Rebecca Danvers,

Director, Office of Research and Technology.

[FR Doc. 06–6369 Filed 7–19–06; 8:45 am]

BILLING CODE 7036–01–M

NATIONAL FOUNDATION ON THE ARTS AND HUMANITIES

Institute of Museum and Library Services, Proposed Collection, Comment Request; Partnership for a Nation of Learners (PNL) Evaluation: Professional Development Activities

AGENCY: Institute of Museum and Library Services.

ACTION: Notice.

SUMMARY: The Institute of Museum and Library Services as part of its continuing effort to reduce paperwork and respondent burden, conducts a pre-clearance consultation program to provide the general public and Federal agencies with an opportunity to comment on proposed and/or continuing collections of information in accordance with the Paperwork Reduction Act of 1995 (PRA95) [44 U.S.C. 3508(2)(A)]. This program helps to ensure that requested data can be provided in the desired format, reporting burden (time and financial resources) is minimized, collection instruments are clearly understood, and the impact of collection requirements on respondents can be properly assessed. The Institute of Museum and Library Services is currently soliciting comments concerning proposed evaluation research of participants in the Partnership for a Nation of Learners (PNL) professional development program.

A copy of the proposed information collection request can be obtained by contacting the individual listed below in the addressee section of this notice.

DATES: Written comments must be submitted to the office listed in the addressee section below on or before September 18, 2006.

IMLS is particularly interested in comments that help the agency to:

- Evaluate whether the proposed collection of information is necessary for the proper performance of the functions of the agency, including whether the information will have practical utility;
- Evaluate the accuracy of the agency's estimate of the burden of the proposed collocation of information including the validity of the methodology and assumptions used;
- Enhance the quality, utility and clarity of the information to be collected; and
- Minimize the burden of the collection of information on those who are to respond, including through the use of appropriate automated electronic, mechanical, or other technological collection techniques or other forms of information technology, e.g., permitting electronic submissions of responses.

ADDRESSES: Send comments to: Karen Motylewski, Evaluation Officer, Institute of Museum and Library Services, 1800 M Street, NW., 9th Floor, Washington, DC. Ms. Motylewski can be reached by telephone: 202–653–4686; fax: 202–653–8625; or e-mail: *kmotylewski@imls.gov.*

SUPPLEMENTARY INFORMATION:

Background: The Institute of Museum and Library Services (IMLS) is an independent Federal grant-making agency authorized by the Museum and Library Services Act, Public Law 104–208. IMLS is charged with promoting the improvement of library and museum services for the benefit of the public. Through grant-making and library and museum services, IMLS seeks to assure that libraries and museums are able to play an active role in cultivating an educated and engaged citizenry. IMLS builds the capacities of libraries and museums by encouraging the highest standards in management, public service, and education; leadership in the use of technology; strategic planning for results, and partnerships to create new networks that support lifelong learning and the effective management of assets. According to its strategic plan, IMLS is dedicated to creating and sustaining a nation of learners by helping libraries and museums serve their communities. IMLS believes that libraries and museums are key resources for education in the United States and promote the vision of a learning society in which learning is seen as a community-wide responsibility supported by both formal and informal educational entities.

Current Action: The Institute of Museum and Library Services and the Corporation for Public Broadcasting (CPB) are partnering under a Memorandum of Understanding to make competitive grants and support capacity-building for community partnerships among museum, library and public broadcasting outlets and other community organizations to meet locally identified community needs in an initiative titled Partnership for a Nation of Learners (PNL). The initiative includes professional development resources such as videoconferences and Web-based materials for potential applicants, grantees, and their partners. IMLS and CPB have publicized these opportunities and resources extensively. IMLS administers the grants process and CPB contracts for and manages the professional development and initiative-level evaluation functions. IMLS seeks clearance for the partnership to collect and analyze information related to evaluation of the PNL initiative.

Overall, IMLS and CPB expect that as a result of PNL, museums, libraries, and public broadcasters will:

1. Collaborate more frequently.
2. Design and deliver projects that contribute significantly to solving or addressing community needs.
3. Develop skills and knowledge required for effective collaboration.
4. Increase community knowledge of the public value created by library, museum, and public broadcasting initiatives.

The PNL professional development program has included following events:

1. Videoconference #1, 11/31/05.
2. Interactive Session #1: Getting Started with Community Collaboration, 1/19/06.
3. Interactive Session #2: Recognizing the Need, 2/07/06.
4. Interactive Session #3: Gathering the Talent, 3/09/06.
5. Interactive Session #4: Designing for Impact, 4/12/06.
6. Interactive Session #5: Managing for Success, 5/11/06.

7. Interactive Session #2, 6/19/06.

An estimated 3,000 persons will have engaged in one or more of these events. An online survey of participants will be conducted after the final event is completed in June 2006. the survey will give these individuals an opportunity to provide feedback on the activities of the PNL professional development program. The evaluation will yield information on what participants learned through the program, their current partnering activity, and their future interest in and need for learning about partnering. Information gathered will help IMLS and CPB to identify potential areas for improvement in PNL professional development activities, determine the level of need/interest for this resource within the key stakeholder groups, and assess the contribution of the professional development resources to meeting local needs and the IMLS and CPB missions.

Agency: Institute of Museum and Library Services.

Title: Partnership for a Nation of Learners (PNL) Evaluation.

OMB Number: Agency Number: 3137.

Frequency: One time Affected Public: Personnel of museums, museum organizations, libraries, library organizations, and public broadcasting outlets.

Number of Respondents: 2400.

Estimated Time per Respondent: 10 minutes.

Total Burden Hours: 400.

Total Annualized capital/startup costs: 0.

Total Annual costs: 0.

FOR FURTHER INFORMATION CONTACT: Karen Motylewski, Evaluation Officer, Institute of Museum and Library Services, 1800 M Street, NW., 9th Floor, Washington, DC. Telephone: 202–653–4686; fax 202–653–8625; e-mail: *kmotylewski@imls.gov*.

Dated: July 17, 2006.

Rebecca Danvers,

Director, Office of Research and Technology.

[FR Doc. 06–6370 Filed 7–19–06; 8:45 am]

BILLING CODE 7036–01–M

NUCLEAR REGULATORY COMMISSION

Agency Information Collection Activities: Submission for the Office of Management and Budget (OMB) Review; Comment Request

AGENCY: U.S. Nuclear Regulatory Commission (NRC).

ACTION: Notice of the OMB review of information collection and solicitation of public comment.

SUMMARY: The NRC has recently submitted to OMB for review the following proposal for the collection of information under the provisions of the Paperwork Reduction Act of 1995 (44 U.S.C. Chapter 35). The NRC hereby informs potential respondents that an agency may not conduct or sponsor, and that a person is not required to respond to, a collection of information unless it displays a currently valid OMB control number.

1. *Type of submission, new, revision, or extension:* Extension.

2. *The title of the information collection:* NRC Form 590, Application/Permit for Use of the Two White Flint (TWFN) Auditorium.

3. *The form number if applicable:* NRC Form 590.

4. *How often the collection is required:* Each time public use of the auditorium is requested.

5. *Who will be required or asked to report:* Members of the public requesting use of the NRC Auditorium.

6. *An estimate of the number of annual responses:* 5.

7. *The estimated number of annual respondents:* 5.

8. *An estimate of the total number of hours needed annually to complete the requirement or request:* 1.25 hours (15 minutes per request).

9. *An indication of whether section 3507(d), Public Law 104–13 applies:* N/A.

10. *Abstract:* In accordance with the Public Buildings Act of 1959, an agreement was reached between the Maryland-National Capital Park and Planning Commission (MPPC), the General Services Administration (GSA), and the Nuclear Regulatory Commission that the NRC auditorium will be made available for public use. Public users of the auditorium will be required to complete NRC Form 590, Application/Permit for Use of Two White Flint North (TWFN) Auditorium. The information is needed to allow for administrative and security review and scheduling, and to make a determination that there are no anticipated problems with the requester prior to utilization of the facility.

A copy of the final supporting statement may be viewed free of charge at the NRC Public Document Room, One White Flint North, 11555 Rockville Pike, Room O–1 F21, Rockville, MD 20852. OMB clearance requests are available at the NRC worldwide Web site: *http://www.nrc.gov/public-involve/doc-comment/omb/index.html.* The document will be available on the NRC home page site for 60 days after the signature date of this notice.

Comments and questions should be directed to the OMB reviewer listed below by August 21, 2006. Comments received after this date will be considered if it is practical to do so, but assurance of consideration cannot be given to comments received after this date.

John A. Asalone, Office of Information and Regulatory Affairs (3150–0181), NEOB–10202, Office of Management and Budget, Washington, DC 20503.

Comments can also be e-mailed to *John_A._Asalone@omb.eop.gov* or submitted by telephone at (202) 395–4650.

The NRC Clearance Officer is Brenda Jo. Shelton, 301–415–7233.

Dated at Rockville, Maryland, this 13th day of July, 2006.

For the Nuclear Regulatory Commission.

Brenda Jo. Shelton,

NRC Clearance Officer, Office of Information Services.

[FR Doc. E6–11515 Filed 7–19–06; 8:45 am]

BILLING CODE 7590–01–P

NUCLEAR REGULATORY COMMISSION

Advisory Committee on Nuclear Waste; Renewal Notice

AGENCY: U.S. Nuclear Regulatory Commission.

ACTION: This notice is to announce the renewal of the Advisory Committee on Nuclear Waste (ACNW) for a period of two years.

SUPPLEMENTARY INFORMATION: The U.S. Nuclear Regulatory Commission (NRC) has determined that the renewal of the charter for the Advisory Committee on Nuclear Waste for the two year period commencing on July 14, 2006, is in the public interest, in connection with duties imposed on the Commission by law. This action is being taken in accordance with the Federal Advisory Committee Act, after consultation with the Committee Management Secretariat, General Services Administration.

The purpose of the Advisory Committee on Nuclear Waste is to report to and advise the Nuclear Regulatory Commission (NRC) on nuclear waste management. The bases of ACNW reviews include 10 CFR parts 20, 40, 50, 60, 61, 63, 70, 71 and 72, and other applicable regulations and legislative mandates. In performing its work, the Committee will examine and report on those areas of concern referred to it by the Commission and may undertake studies and activities on its own initiative, as appropriate. Emphasis will be on protecting the public health and safety in the disposal of nuclear waste and the handling and processing of

nuclear materials. The Committee will undertake studies and activities related to nuclear materials and waste management such as transportation, waste determinations, reprocessing, storage and disposal facilities, in situ leaching mining, mill tailings, enrichment facilities, health effects, decommissioning, materials safety, application of risk-informed, performance-based regulations, and evaluation of licensing documents, rules and regulatory guidance. The Committee will interact with representatives of the public, NRC, Advisory Committee on Reactor Safeguards, other Federal agencies, State and local agencies, Indian Tribes, and private, international, and other organizations as appropriate to fulfill its responsibilities.

FOR FURTHER INFORMATION CONTACT: John T. Larkins, Executive Director of the Committee, U.S. Nuclear Regulatory Commission, Washington, DC 20555, telephone (301) 415–7360.

Dated: July 14, 2006.

Andrew L. Bates,

Federal Advisory Committee, Management Officer.

[FR Doc. E6–11514 Filed 7–19–06; 8:45 am]

BILLING CODE 7590–01–P

NUCLEAR REGULATORY COMMISSION

Technical Specification Improvement for Combustion Engineering Plants to Risk-Inform Requirements Regarding Conditions Leading to Exigent Plant Shutdown Using the Consolidated Line Item Improvement Process

AGENCY: Nuclear Regulatory Commission.

ACTION: Request for comment.

SUMMARY: Notice is hereby given that the staff of the Nuclear Regulatory Commission (NRC) has prepared a model safety evaluation (SE) relating to changes in Combustion Engineering (CE) plant conditions leading to exigent plant shutdown in technical specifications (TS). The NRC staff has also prepared a model no-significant-hazards-consideration (NSHC) determination relating to this matter and a model license amendment request (LAR). The purpose of these models is to permit the NRC to efficiently process amendments that propose to adopt technical specifications changes, designated as TSTF–426, related to Topical Report WCAP–16125–NP, Revision 0 (Rev 0), September 2003 (previously CE NPSD–1208, Rev. 0), ''Justification for the Risk Informed Modifications to Selected Technical Specifications for Conditions Leading to Exigent Plant Shutdown,'' which was approved by an NRC SE dated July 9, 2004. Licensees of CE nuclear power reactors to which the models apply could then request amendments, confirming the applicability of the SE and NSHC determination to their reactors. The NRC staff is requesting comment on the model SE and model NSHC determination prior to announcing their availability for referencing in license amendment applications.

DATES: The comment period expires August 21, 2006. Comments received after this date will be considered if it is practical to do so, but the Commission is able to ensure consideration only for comments received on or before this date.

ADDRESSES: Comments may be submitted either electronically or via U.S. mail. Submit written comments to Chief, Rules and Directives Branch, Division of Administrative Services, Office of Administration, Mail Stop: T–6 D59, U.S. Nuclear Regulatory Commission, Washington, DC 20555–0001. Hand deliver comments to: 11545 Rockville Pike, Rockville, Maryland, between 7:45 a.m. and 4:15 p.m. on Federal workdays. Copies of comments received may be examined at the NRC's Public Document Room, 11555 Rockville Pike (Room O–1F21), Rockville, Maryland. Comments may be submitted by electronic mail to *CLIIP@nrc.gov*.

FOR FURTHER INFORMATION CONTACT: T.R. Tjader, Mail Stop: O–12H2, Division of Inspection & Regional Support, Office of Nuclear Reactor Regulation, U.S. Nuclear Regulatory Commission, Washington, DC 20555–0001, telephone 301–415–1187.

SUPPLEMENTARY INFORMATION:

Background

Regulatory Issue Summary 2000–06, ''Consolidated Line Item Improvement Process for Adopting Standard Technical Specifications Changes for Power Reactors,'' was issued on March 20, 2000. The consolidated line item improvement process (CLIIP) is intended to improve the efficiency of NRC licensing processes, by processing proposed changes to the standard technical specifications (STS) in a manner that supports subsequent license amendment applications. The CLIIP includes an opportunity for the public to comment on proposed changes to the STS after a preliminary assessment by the NRC staff and finding that the change will likely be offered for adoption by licensees. This notice solicits comment on a proposed change to the STS that allows changes in CE plant conditions leading to exigent plant shutdown in technical specifications (TS), if risk is assessed and managed. The CLIIP directs the NRC staff to evaluate any comments received for a proposed change to the STS and to either reconsider the change or announce the availability of the change for adoption by licensees. Licensees opting to apply for this TS change are responsible for reviewing the staff's evaluation, referencing the applicable technical justifications, and providing any necessary plant-specific information. Each amendment application made in response to the notice of availability will be processed and noticed in accordance with applicable NRC rules and procedures.

This notice involves the changes in CE plant conditions leading to exigent plant shutdown in TS, if risk is assessed and managed. The change was proposed in Topical Report WCAP–16125–NP Rev 0, September 2003 (previously CE NPSD–1208, Rev 0), ''Justification for the Risk Informed Modifications to Selected Technical Specifications for Conditions Leading to Exigent Plant Shutdown,'' which was approved by an NRC SE dated July 9, 2004. This change was proposed for incorporation into the STS by the owners groups participants in the Technical Specification Task Force (TSTF) and is designated TSTF–426, Rev 0. TSTF–426, Rev 0, can be viewed on the NRC's web page at *http://www.nrc.gov/reactors/operating/licensing/techspecs.html*.

Applicability

This proposal to modify TS requirements by the adoption of TSTF–426, Rev 0, is applicable to all licensees of CE plants who commit to WCAP–16446–NP, Rev 0, ''Actions to Preclude Entry into LCO 3.0.3 Implementation Guidance (PA–RMCS–0196),'' June 2005.

To efficiently process the incoming license amendment applications, the staff requests that each licensee applying for the changes proposed in TSTF–426 include Bases for the proposed TS consistent with the Bases proposed in TSTF–426. The CLIIP does not prevent licensees from requesting an alternative approach or proposing the changes without the requested Bases. However, deviations from the approach recommended in this notice may require additional review by the NRC staff and may increase the time and resources needed for the review. Significant variations from the approach, or

inclusion of additional changes to the license, will result in staff rejection of the submittal. Instead, licensees desiring significant variations and/or additional changes should submit a LAR that does not claim to adopt TSTF–426.

Public Notices

This notice requests comments from interested members of the public within 30 days of the date of publication in the **Federal Register**. After evaluating the comments received as a result of this notice, the staff will either reconsider the proposed change or announce the availability of the change in a subsequent notice (perhaps with some changes to the safety evaluation or the proposed NSHC determination as a result of public comments). If the staff announces the availability of the change, licensees wishing to adopt the change must submit an application in accordance with applicable rules and other regulatory requirements. For each application, the staff will publish a notice of consideration of issuance of amendment to facility operating licenses, a proposed NSHC determination, and a notice of opportunity for a hearing. The staff will also publish a notice of issuance of an amendment to operating license to announce the modifications of conditions leading to exigent plant shutdown in selected technical specifications.

Dated at Rockville, Maryland, this 13th day of July 2006.

For the Nuclear Regulatory Commission.

Carl S. Schulten,

Acting Chief, Technical Specifications Branch, Division of Inspection & Regional Support, Office of Nuclear Reactor Regulation.

Attachment—Proposed Safety Evaluation, United States Nuclear Regulatory Commission; Office of Nuclear Reactor Regulation; Consolidated Line Item Improvement Technical Specification Task Force (TSTF) Change TSTF–426 Risk Informed Modifications to Selected Technical Specifications for Conditions Leading to Exigent Plant Shutdown

1.0 Introduction

On August 30, 2004, the Owners Group (OG) Technical Specifications Task Force (TSTF) submitted a proposed change, TSTF–426, Revision 0 (Rev 0), to the Combustion Engineering (CE) standard technical specifications (STS) (NUREG–1432) on behalf of the industry. TSTF–426, Rev 0, is a proposal to incorporate WCAP–16125–NP Rev 0, (previously CE NPSD–1208, Rev 0), of September 2003, ''Justification for the Risk Informed Modifications to Selected Technical Specifications for Conditions Leading to Exigent Plant Shutdown,'' which was approved by an NRC safety evaluation (SE) dated July 9, 2004 into the CE STS. This proposal is part of Nuclear Energy Institute (NEI) Risk Informed Technical Specifications Task Force (RITSTF) Initiative 6, one of the industry's initiatives being developed under the Risk Management Technical Specifications (RMTS) program. These initiatives are intended to maintain or improve safety through the incorporation of risk assessment and management techniques in technical specifications (TS), while reducing unnecessary burden and making technical specification requirements consistent with the Commission's other risk-informed regulatory requirements.

The Code of Federal Regulations, 10 CFR 50.36(c)(2)(I), ''Technical Specifications; Limiting Conditions for Operation,'' states: ''When a limiting condition for operation of a nuclear reactor is not met, the licensee shall shut down the reactor or follow any remedial action permitted by the technical specifications until the condition can be met.'' TS provide a completion time (CT) limit for following any remedial action permitted by the TS until the limiting condition for operation (LCO) can be met. If the LCO or the remedial action cannot be met on the specified CT, then the reactor is required to be shutdown.

The Required Action for Conditions that imply a loss of function, related to a system or component included within the scope of the plant TS, is entry into LCO 3.0.3. Currently, upon entering LCO 3.0.3, one hour is allowed to prepare for an orderly shutdown before initiating a change in plant operation. This includes time to permit the operator to coordinate the reduction in electrical generation with the load dispatcher to ensure the stability and availability of the electrical grid. The OG is proposing to define and/or modify various TS Conditions to accommodate extension of the currently required time of one hour to initiate plant shutdown for members with Combustion Engineering (CE) Nuclear Steam Supply Systems (NSSS) designs. The proposed extension, related to specific systems or components, is based on the system's risk significance and varies from 4 hours to 72 hours.

The proposed changes are typically associated with plant conditions where both trains of a two-train redundant system are declared inoperable and at the same time there is either no specified action in the TS for the condition (requiring a default LCO 3.0.3 entry) or conditions exist where the defined action includes an explicit LCO 3.0.3 entry. The intent of the proposed TS changes is to provide a risk-informed alternative to the current LCO 3.0.3 requirements such that the plant staff has adequate time to fully evaluate the situation or restore loss of function while the plant remains operating at power, thus avoiding unnecessary unscheduled plant shutdowns and minimizing transition and realignment risks.

WCAP–16125–NP also provides system-specific integrated justifications (i.e., risk and defense-in-depth arguments) for several proposed TS Required Action statement changes to allow a MODE 4 (hot shutdown) end state, for repair purposes of two-train redundant systems that do not have explicit LCO 3.0.3 entry requirements, when the proposed extended time cannot be met.

The intent of the proposed TS changes is to provide needed flexibility in the performance of corrective maintenance during power operation and at the same time enhance overall plant safety by:

- Avoiding unnecessary unscheduled plant shutdowns,
- Minimizing plant transitions and associated transition and realignment risks,
- Providing increased flexibility in scheduling and performing maintenance and surveillance activities, and
- Providing explicit guidance in areas that currently does not exist.

It should be noted that many of the proposed TS changes affect the existing plant shutdown requirements for plant conditions where the plant operation is not in explicit compliance with the plant design basis. The proposed actions provide a risk-informed process for establishing shutdown priorities aiming at reducing overall plant risk and increasing public health and safety protection.

2.0 Regulatory Evaluation

In 10 CFR 50.36, the Commission established its regulatory requirements related to the content of TS. Pursuant to 10 CFR 50.36(c)(1)–(5), TS are required to include items in the following five specific categories related to station operation: (1) Safety limits, limiting safety system settings, and limiting control settings; (2) limiting conditions for operation (LCOs); (3) surveillance requirements (SRs); (4) design features; and (5) administrative controls. The rule does not specify the particular requirements to be included in a plant's TS. As stated in 10 CFR 50.36(c)(2)(i), the ''Limiting conditions for operation

are the lowest functional capability or performance levels of equipment required for safe operation of the facility. When a limiting condition for operation of a nuclear reactor is not met, the licensee shall shut down the reactor or follow any remedial action permitted by the technical specifications * * *.'' Topical Report WCAP–16125, ''Justification for Risk-Informed Modifications to Selected Technical Specifications for Conditions Leading to Exigent plant Shutdown'' (Reference 1), justifies modifications to various TS Action Statements for conditions that result in a loss of safety function related to a system or component included within the scope of the plant TS. It revises the current Required Actions from either a default or explicit LCO 3.0.3 entry to a risk-informed action based on the system's risk significance with an associated completion time (CT). In most instances, a CT of 24 hours is justified.

3.0 Technical Evaluation

The changes proposed in TSTF–426, Rev 0, are consistent with the changes proposed and justified in Topical Report WCAP–16125–NP Rev 0, and approved by the associated NRC SE of July 9, 2004 (Reference 2). The evaluation included in Reference 2, as appropriate and applicable to the changes of TSTF–426, Rev 0, (Reference 3), is not reiterated here, except where differences from the SE are justified and in discussing the TSTF–426 changes with respect to the individual specifications. In its application the licensee commits to PA–RMSC–0196, ''Actions to Preclude Entry into LCO 3.0.3, Implementation Guidance'' (Reference 4) for implementing TSTF–426, Rev 0, which addresses a variety of issues such as considerations and compensatory actions for risk-significant plant configurations. An overview of the generic evaluation and associated risk assessment is provided below, along with a summary of the associated TS changes justified by Reference 1.

The proposed TS changes, including end state changes (i.e., approved TSTF–422 end state changes), are summarized in Table 1 of this safety evaluation report (SER). Such changes cover a diverse range of systems and components with essentially four separate impacts on plant risk. They are:

- TS changes related to systems or components contributing to accident prevention. The removal of these systems/components has the potential to increase the plant risk through the increased potential for plant upsets (i.e., potential for increased initiated event frequencies). A typical example in this category are the pressurizer heaters whose unavailability could complicate plant pressure control and lead to a plant trip.
- TS changes related to systems or components contributing to accident mitigation. These systems are in standby during normal plant operation and are intended to function during accidents to prevent core damage. Typical examples in this category are the Emergency Core Cooling System (ECCS) and the pressurizer Power Operated Relief Valves (PORVs).
- TS changes related to systems or components contributing to large early release prevention. The primary role of these systems is to function during a core damage accident to prevent large releases of radioactive materials. A typical example in this category is the containment (the only component in this category for which a TS change is proposed).
- TS changes related to systems/components contributing to control of delayed radiation releases to the environment. The primary role of these systems is to prevent radiation releases above TS limits and meet design basis requirements. Thus, the unavailability of these systems has no impact on the surrogate risk metrics associated with core damage and large early releases. Typical examples in this category are the ECCS room ventilation system and the containment iodine cleanup system.

Although the improved standard technical specification (STS) numbering system (NUREG–1432, Reference 5) is used for convenience in Table 1, the analyses provided in WCAP–16125–NP support these changes for all CE designed NSSS plants.

TABLE 1.—SUMMARY OF PROPOSED MODIFICATIONS TO TECHNICAL SPECIFICATIONS

STS #	System	Inoperability condition	Current action and associated completion time (CT)	Proposed changes: completion time (CT) and end state
LCO 3.4.9	Pressurizer Heaters	Both groups of class 1E heaters inoperable.	No condition defined. Default LCO 3.0.3 entry.	24 hrs CT for restoring one group.
LCO 3.4.11 ..	Pressurizer Power Operated Relief Valves (PORVs) and Associated Block Valves (BVs).	*STS LCO 3.4.11 CONDITION E (or equivalent):* Two PORVs inoperable and not capable of being manually cycled. *STS LCO 3.4.11 CONDITION F (or equivalent):* Two BVs inoperable.	Varies with plant. *STS LCO 3.4.11 CONDITION E (or equivalent)*: Close associated block valve in 1 hour AND remove power from associated block valve in one hour, AND be in MODE 3 in 6 hours AND MODE 4 in [12] hours. *STS LCO 3.4.11 CONDITION F (or equivalent):* Restore one block valve to operable in 2 hours. STS Condition G requires MODE 3 in 6 hours and MODE 4 in [12] hours if Condition F not met.	*STS LCO 3.4.11 CONDITION E (or equivalent):* Allow 8 hours CT to restore one PORV, for conditions where a PORV is unable to reclose once challenged but may be isolated. *STS LCO 3.4.11 CONDITION F (or equivalent):* Allow 8 hours to restore one BV.
LCO 3.5.1	Safety Injection Tanks (SITs)	Two or more SITs inoperable (STS CONDITION D).	Explicit 3.0.3 entry	Revise STS Condition D to allow 24 hours CT for restoring one SIT.
LCO 3.5.2	Low Pressure Safety Injection (LPSI).	Two LPSI subsystems inoperable.	Default 3.0.3 entry	24 hours for restoring one LPSI subsystem (STS Condition D would be deleted).
LCO 3.5.2	High Pressure Safety Injection (HPSI).	Two HPSI subsystems inoperable (STS Condition D).	Explicit 3.0.3 entry	4 hours CT for restoring one HPSI subsystem.

TABLE 1.—SUMMARY OF PROPOSED MODIFICATIONS TO TECHNICAL SPECIFICATIONS—Continued

STS #	System	Inoperability condition	Current action and associated completion time (CT)	Proposed changes: completion time (CT) and end state
LCO 3.6.1	Containment (CTMT)	Inoperable	Defined 1 hour shutdown (MODE 5 in 36 hours).	8 hours CT restoring containment operability. Allow MODE 4 end state.
LCO 3.6.6A&B.	Containment Spray System (CS).	Two CS trains inoperable OR any combination of three or more trains inoperable (i.e., containment air coolers (CAC*)) (STS Condition F).	Explicit 3.0.3 entry	12 hrs CT for restoring one CS train if CAC is not available. 72 hours CT for restoring one CS if one train of CAC is available.
LCO 3.6.10 ..	Iodine Cleanup System (ICS)	Two ICS trains inoperable	No condition defined. Default 3.0.3 entry.	24 hours CT for restoring one train. Allow MODE 4 end state.
LCO 3.6.13 ..	Shield Building Exhaust Air Cleanup System (SBEACS).	Two trains inoperable	No condition defined. Default 3.0.3 entry.	24 hours CT for restoring one train. Allow MODE 4 end state.
LCO 3.7.11 ..	Control Room Emergency Air Cleanup System (CREACS).	Two trains inoperable	No condition defined. Default 3.0.3 entry.	24 hours CT for restoring one train (or the time to reach 5 REM, which may be less than 24 hours). Proposed change applies to radiation protection function only. Allow MODE 4 end state.
LCO 3.7.12 ..	Control Room Emergency Air Temperature Control System (CREATCS).	Two trains inoperable (STS Condition E).	Explicit 3.0.3	24 hours CT for restoring one train. Allow MODE 4 end state.
LCO 3.7.13 ..	Emergency Core Cooling System (ECCS), Pump Room Exhaust Air Cleanup System (ECCS PREACS).	Two trains inoperable	No condition defined. Default 3.0.3 entry.	24 hours CT for restoring one train. Allow MODE 4 end state.
LCO 3.7.15 ..	Penetration Room, Exhaust Air Cleanup System (PREACS).	Two trains inoperable	No condition defined. Default 3.0.3 entry.	24 hours CT for restoring one train. Allow MODE 4 end state.

*Also known as containment air recirculation coolers (CARC)

WCAP–16125–NP documents a risk-informed analysis of the proposed TS changes. Probabilistic Risk Assessment (PRA) results and insights are used, in combination with results of deterministic assessments, to identify and justify the proposed TS changes for all CE NSSS design plants. This is in accordance with guidance provided in Regulatory Guides (RGs) 1.174 and 1.177 (References 6 and 7, respectively).

The approach used to assess the risk impact of the proposed changes is discussed and evaluated in Section 3.0. Section 3.1 evaluates the results of the risk assessment. Section 3.2 provides integrated justifications (i.e., both probabilistic and deterministic arguments) for each of the proposed system-specific TS changes. Finally, Section 3.3 summarizes the staff's conclusions from the review of the proposed TS changes.

3.1 Risk Assessment

The objective of the OG's risk assessment was to show that the implementation of the proposed TS changes are not expected to lead to any significant risk increases. In performing the risk-informed assessments and interpreting the results, the following two assumptions are tacitly made:

- A condition resulting in the inoperability of a system or component which currently results in the need for an immediate shutdown is an infrequent event. This is evidenced by the fact that plant shutdowns due to entries into LCO 3.0.3 conditions are rare. Furthermore, when such a condition does arise, the actual cause of the inoperability is often due to an incomplete ''paper trail'' or a partial system failure rather than a deleterious common-cause failure of critical components leading to a functional failure of an entire system.
- The risk incurred by increasing the required shutdown action time is controlled to acceptable levels using a risk informed approach that considers the component risk worth and offsetting benefits of avoiding plant transitions.

The risk impact of the proposed TS changes was assessed following the three-tiered approach recommended in RG 1.177 for evaluating proposed extensions in currently allowed Completion Times (CTs):

- The first tier involves the assessment of the change in plant risk due to the proposed TS change. Such risk change is expressed (1) by the change in the average yearly core damage frequency (ΔCDF) and the average yearly large early release frequency (ΔLERF) and (2) by the incremental conditional core damage probability (ICCDP) and the incremental conditional large early release probability (ICLERP). The assessed ΔCDF and ΔLERF values are compared to acceptance guidelines, consistent with the Commission's Safety Goal Policy Statement as documented in RG 1.174, so that the plant's average baseline risk is maintained within a minimal range. The assessed ICCDP and ICLERP values are compared to acceptance guidelines provided in RG 1.177 which aim at ensuring that the plant risk does not increase unacceptably during the period the equipment is taken out of service.
- The second tier involves the identification of potentially high-risk configurations that could exist if equipment in addition to that associated with the change were to be taken out of service simultaneously, or other risk-significant operational factors such as concurrent equipment testing were also involved. The objective is to ensure that appropriate restrictions are in place to avoid any potential high-risk configurations.

• The third tier involves the establishment of an overall configuration risk management program (CRMP) to ensure that potentially risk-significant configurations resulting from maintenance and other operational activities are identified. The objective of the CRMP is to manage configuration-specific risk by appropriate scheduling of plant activities and/or appropriate compensatory measures.

The approach used in implementing the three-tiered approach of RG 1.177 to support the proposed TS changes is fully evaluated in the SE (Reference 2) to WCAP–16125–NP Rev 0. The staff found that the risk assessment results support the proposed changes. The risk increases associated with the proposed TS changes, if any, will be insignificant based on guidance provided in RGs 1.174 and 1.177. Furthermore, the sensitivity studies and the many conservative assumptions used in the analyses provide adequate assurance about the robustness of the results used to support the proposed TS changes.

3.2 Assessment of Technical Specification Changes

There are two categories of proposed system-specific TS changes. The first category includes changes associated with plant conditions requiring entry into LCO 3.0.3 to extend the time for restoring the system's or component's loss of function, thus avoiding unnecessary unscheduled plant shutdowns and minimizing transition and realignment risks. The second category includes changes to TS Required Action statements to allow a MODE 4 (hot shutdown) end state, for repair purposes of two-train redundant systems that do not have implicit LCO 3.0.3 entry requirements, when the proposed extended time cannot be met. The generic risk assessment for the proposed end state changes is documented in topical report CE–NPSD–1186 (Reference 8) which has been reviewed and approved by the staff. While all proposed system-specific TS changes include changes to extend the time for restoring the system's or component's loss of function (first category changes), some proposed system-specific TS changes include changes to modify the end state (second category changes). Therefore, the integrated justifications, discussed in this section, include insights from the generic risk assessments documented in both topical reports WCAP–16125–NP (Reference 1) and CE–NPSD–1186 (Reference 8).

Due to the nature of the plant conditions associated with the proposed TS changes (i.e., loss of a system's or component's function), the redundancy and diversity typically associated with ensuring the deterministic aspect of defense-in-depth position is not always strictly possible. In these cases, defense-in-depth is considered by (1) controlling the outage time for related equipment, (2) restricting activities which may challenge the unavailable systems or functions, (3) allowing only small time intervals for plant operation at power with a system or function unavailable, (4) using, whenever possible, contingency actions to limit concurrent unavailabilities appropriately, and (5) evaluating repair activities and alternatives. Defense-in-depth is evaluated in conjunction with the generic risk assessment results which conclude that the proposed system-specific TS changes would lead to insignificant risk increases and in most cases to net risk reductions. This conclusion is a consequence of the low expected challenge frequency of the systems or functions associated with the proposed TS changes, the very short proposed exposure times to the specified plant conditions and the offsetting benefits of avoiding plant transitions.

The proposed change in shutdown mode end states will result in plants remaining within the applicability of the specific LCOs for the length of time it takes to restore the LCO conditions. Since corrective maintenance will be necessary, the 10 CFR 50.65(a)(4) requirement to assess and manage risk will apply, and should confirm that remaining in the shutdown mode that is within the applicability of the LCO is acceptable for the plant specific configuration. NRC Regulatory Guide 1.182 (Reference 9) endorses NUMARC 93–01 Section 11 guidance for implementation of 10 CFR 50.65(a)(4), and shall be followed; including the conduct of an (a)(4) reevaluation for emergent conditions.

3.2.1 Pressurizer Heaters (STS LCO 3.4.9)

The pressurizer provides a point in the RCS where the liquid and vapor water phases are maintained in equilibrium under saturated conditions for pressure control purposes to prevent bulk boiling in the remainder of the RCS. The pressure control components addressed by this LCO include the pressurizer, the required groups of heaters and their controls and the Class 1E power supplies. The liquid to vapor interface permits RCS pressure control by using the sprays and heaters during normal operation and in response to anticipated design basis accidents. The unavailability of Class 1E pressurizer heaters covered by the TS may complicate steady state plant pressure control and, thus, increase the potential for an unplanned reactor trip.

Another function of the Class 1E pressurizer heaters is to maintain plant subcooling during post accident cooldown by natural circulation. Although the unavailability of pressurizer heaters during natural circulation cooldown will extend the time to reach the shutdown cooling system entry conditions, heat removal will be adequately established via steam generator cooling.

Plant Applicability: All OG member plants with CE NSSS designs except St Lucie-2.

Limiting Condition for Operation (LCO): Two groups of pressurizer heaters, [capable of being powered from an emergency power supply], must be operable in MODES 1, 2 and 3.

Condition Requiring Entry into Shutdown Required Action: Two safety-related pressurizer heater groups inoperable (default entry into LCO 3.0.3 is required).

Proposed Modification to Shutdown Required Actions: Increase the time available to take action to restore one group of safety-related heaters before entry into STS LCO 3.4.9 Condition C to 24 hours.

Assessment: The risk assessment results (in Reference 2) indicate that the proposed 24-hour completion time for restoring one group of safety-related pressurizer heaters before entering STS LCO 3.4.9 Condition C will not lead to a significant increase in risk and may actually decrease risk. The risk impact of the proposed completion time extension was assessed to be well within the acceptance criteria reported in Regulatory Guides 1.174 and 1.177. Specifically, the proposed completion time extension would lead to the following risk increases: (1) The probability of core damage when the safety-related pressurizer heaters are inoperable will increase by about 3E–7 (the acceptance guideline for ICCDP is 5E–7); (2) the CDF will increase by about 6E–8/year (the acceptance guideline for ΔCDF is 1E–6/year); (3) the large early release probability when the safety-related pressurizer heaters are inoperable will increase by less than 1E–8 (the acceptance guideline for ICLERP is 5E–8); and (4) the LERF will increase by about 2E–9/year (the acceptance guideline for ΔLERF is 1E–7/year). Furthermore, the proposed time extension may actually be risk neutral or result in a decrease in risk if credit for avoiding the transition to shutdown risk is taken.

The risk impact argument is consistent with the following observations. TS include requirements for both groups of safety-related pressurizer heaters to have minimum heating power [and emergency power supply capability]. The safety-related pressurizer heaters have two primary functions. One function is to keep the reactor coolant in a subcooled condition with natural circulation following a loss of offsite power (LOOP) event during which the normally available station powered non-safety related heaters become unavailable. Although no credit is taken in design basis accident analyses for the pressurizer heaters, they have been included in the TS because they are needed to maintain long term subcooling during a LOOP event. However, pressurizer heaters are not required to achieve a post-trip plant cooldown since successful cooldown can be achieved, with minimal impact on plant risk, due to the availability of reactor vessel and pressurizer vents. Consequently, the pressurizer heaters do not have a significant role in the mitigation of core damage events. A second function of the safety-related pressurizer heaters is to back up the station powered non-safety related heaters which are normally available to control reactor coolant pressure during steady state operation. The unavailability of these heaters would reduce the plant's ability to control the normal operating parameters and consequently will increase the potential of plant trip.

The presence of both safety-related and non-safety-related heaters provides considerable defense-in-depth for many transient events, except following a LOOP event. For LOOP events and without the safety-related pressurizer heaters, a natural circulation cooldown may be required. Such cooldowns can be conducted via use of reactor vessel and pressurizer vents or SG venting via the atmospheric dump valves (ADVs).

The intent of the proposed completion time extension is to extend plant operation at power when the ability to control normal plant operation is not significantly degraded. Therefore, the proposed completion time extension should not be utilized when there is reason to believe that plant pressure and level cannot be controlled within operating bounds, as is the case when both the safety and non-safety pressurizer heaters are unavailable. This restriction should be reflected in the TS bases.

Finding: The requested change to increase the time available to take action to restore one pressurizer heater group to 24 hours for cases when both groups are inoperable is acceptable.

Tier 2 Restrictions: None.

3.2.2 Pressurizer PORVs and Associated Block Valves (STS LCO 3.4.11)

PORVs are automatically opened at a specific set pressure when the pressurizer pressure increases and automatically closed on decreasing pressure. The PORVs may be manually operated using controls installed in the control room. An electric, normally open, block valve (BV) is installed between the pressurizer and the PORV. The function of the BV is to ensure RCS integrity by isolating a leaking or stuck-open PORV to permit continued power operation. Most importantly, the BV is used to isolate a stuck open PORV and terminate the RCS depressurization and coolant inventory loss.

Plant Applicability: Calvert Cliffs 1 & 2, St Lucie 1 & 2 (block valves), Millstone 2, Palisades, and Fort Calhoun Station.

Limiting Condition for Operation (LCO): Each PORV and associated block valve shall be operable in MODES 1, 2 and 3.

Condition Requiring Entry into Shutdown Required Action: Two PORVs inoperable and not capable of being manually cycled (STS LCO 3.4.11 Condition E or equivalent) or two BVs inoperable (STS LCO 3.4.11 Condition F or equivalent). There is a variability in LCO entry requirements among OG member plants with CE NSSS designs for conditions with both PORVs inoperable or both BVs inoperable. Typically, a plant shutdown is required if the PORVs are not isolated and one PORV is not restored within one hour (STS LCO 3.4.11 Condition E or equivalent) or when the PORVs are not placed in manual control within one hour and one BV is not recovered within two hours (STS LCO 3.4.11 Condition F or equivalent).

Proposed Modification to Shutdown Required Actions: Revise STS LCO 3.4.11 Condition E (or equivalent to allow an 8-hour completion time (CT) to restore one PORV for conditions where a PORV is unable to re-close once challenged, but may be isolated). This extension would not apply to PORVs that are leaking, and that cannot be isolated by block valves, or to PORVs that are not expected to be isolable following a demand.

Revise STS LCO 3.4.11 Required Action F.2 to allow 8 hours to restore one BV, for conditions where the associated PORV is unable to reclose.

Assessment: The risk assessment results (in Reference 2) indicate that the proposed 8-hour completion time for the actions required by TS (i.e., actions associated with STS LCO 3.4.11 Conditions E and F or equivalent) will not lead to a significant increase in risk and, actually, may decrease risk by avoiding the risk associated with the transition to shutdown. The risk impact of the proposed completion time extension, without credit for avoiding the transition to shutdown risk, was assessed to be within the acceptance criteria reported in Regulatory Guides 1.174 and 1.177. Specifically, the proposed time extension would lead to the following risk increases: (1) The probability of core damage will increase by about 8E–7, which is close to the numerical guideline of 5E–7 for ICCDP used in RG 1.177; (2) the CDF will increase by about 2E–7/year, which is significantly less than the acceptance guideline of 1E–6/year for ΔCDF; (3) the large early release probability will increase by less than 7E–8, which is close to the numerical guideline of 5E–8 for ICLERP and in agreement with guidance provided in RG 1.177; and (4) the LERF will increase by about 1E–8/year, which is significantly less than the acceptance guideline of 1E–7/year for ΔLERF. Furthermore, the proposed time extension may actually be risk neutral or result in a decrease in risk if credit for avoiding the transition to shutdown risk is taken.

The risk impact argument is consistent with the following defense-in-depth argument where the impact of STS LCO 3.4.11 Conditions E and F on defense-in-depth is discussed. The primary purpose of this LCO is to ensure that the PORVs and the BVs are operable so the potential for a small break LOCA through the PORV pathway is minimized, or if a small LOCA were to occur through a failed open PORV, the block valve could be manually operated to isolate the path. In addition, one of the functions of the PORVs is to limit the number of pressure transients that may challenge the primary safety valves (PSVs) since the PSVs, unlike the PORVs, cannot be isolated.

When both PORVs are found inoperable (i.e., STS LCO 3.4.11 Condition E or equivalent), the associated BVs are manually closed, within one hour, to isolate both PORV paths. With none of the PORVs available to open, the PSVs could be challenged to provide overpressure protection. However, a challenge to the PSVs during the proposed completion time extension to restore one PORV is extremely unlikely and the PSVs are available and highly reliable (i.e., even if they are challenged, they would close properly when the pressure is reduced

below their setpoint). It should be noted that overpressure protection is provided by the PSVs in the design basis analyses, without any credit for PORV opening for accident mitigation (in fact there are some plants built without PORVs). For these reasons, there is defense-in-depth against LOCA accidents through the PORV and the PSV paths as well as against overpressure accidents during the very short time interval when STS LCO 3.4.11 Condition E is proposed to be allowed with the plant operating at power.

When both BVs are found inoperable (i.e., STS LCO 3.4.11 Condition F or equivalent), the PORVs are placed in manual control, within one hour, to ensure that they do not open automatically in the unlikely event they are challenged. Therefore, there is defense-in-depth against small LOCA accidents through the PORV paths. However, in the unlikely event of a pressure transient during the proposed completion time extension, the PSVs could be challenged to provide overpressure protection. This is the same scenario discussed above for STS LCO 3.4.11 Condition E. For these reasons, there is defense-in-depth against LOCA accidents through the PORV and the PSV paths as well as against overpressure accidents during the very short time interval when STS LCO 3.4.11 Condition F is proposed to be allowed with the plant operating at power.

The PORV paths provide an alternative means of core cooling by feed and bleed (once-through core cooling) in the case of multiple equipment failure events that are not within the design basis, such as a total loss of feedwater. The unavailability of feed and bleed for core cooling, the dominant contributor to risk associated with the proposed changes to LCO 3.4.11. As discussed above, such risk is very small.

Finding: The requested changes to allow 8 hours for completing the actions required by TS (i.e., actions associated with STS LCO 3.4.11 Conditions E and F or equivalent) are acceptable.

Tier 2 Restrictions: None.

3.2.3 Safety Injection Tanks (STS LCO 3.5.1)

The Safety Injection Tanks (SITs) are pressurized passive injection devices whose primary safety function is to inject large quantities of borated water into the reactor vessel during the blowdown phase of a large LOCA and to provide inventory to help accomplish the refill phase that follows the blowdown phase.

Plant Applicability: Applicable to all OG member plants with CE NSSS designs.

Limiting Condition for Operation (LCO): All SITs shall be operable during MODES 1 and 2 as well as during MODE 3 when the pressurizer pressure is above [700] psia.

Condition Requiring Entry into Shutdown Required Action: When two or more SITs are inoperable (STS LCO 3.5.1 Condition D), immediate entry into LCO 3.0.3 is required.

Proposed Modification to Shutdown Required Actions: Increase the time available to restore one SIT before entry into LCO 3.0.3 to 24 hours.

Assessment: The risk assessment results (in Reference 2) indicate that the proposed 24-hour completion time for restoring one SIT before entering LCO 3.0.3 will not lead to a significant increase in risk and may actually decrease risk. The risk impact of the proposed 23-hour extension, without credit for avoiding the transition to shutdown risk, was assessed to be well within the acceptance criteria reported in Regulatory Guides 1.174 and 1.177. Specifically, the proposed time extension would lead to the following risk increases: (1) The probability of core damage will increase by about 1E–8, which is less than the numerical guideline of 5E–7 for ICCDP; (2) the CDF will increase by about 3E–9/year, which is significantly less than the acceptance guideline of 1E–6/year for DCDF; (3) the large early release probability will increase by about 4E–11, which is much less than the numerical guideline of 5E–8 for ICLERP; and (4) the LERF will increase by about 9E–12/year, which is much less than the acceptance guideline of 1E–7/year for ΔLERF. Furthermore, the proposed time extension would, most likely, result in a risk reduction if credit for avoiding the transition to shutdown risk is taken.

The risk impact argument is also supported by the following defense-in-depth discussion. The SITs are needed primarily to mitigate large LOCAs. The unavailability of two or more SITs will compromise the ability of the plant to respond to a large LOCA. However, as discussed above, even if it is conservatively assumed that all large LOCAs proceed to core damage, the risk impact is negligible (much less than the risk estimated to incur during plant transition to shutdown). On the other hand, the unavailability of two or more SITs may alter the progression of some smaller break size LOCAs and the extent of core damage. However, their impact on the core damage potential is negligible. In addition, long term core cooling, provided via the plant's LPSI and HPSI systems, partially offsets the impact of SIT unavailability.

Finding: The requested change to increase the time available to take action to restore all SITs (from one to 24 hours) for cases when two or more SITs are inoperable is acceptable.

Tier 2 Restrictions: None.

3.2.4 Low Pressure Safety Injection (STS LCO 3.5.2)

The low pressure safety injection (LPSI) system is part of the emergency core cooling system (ECCS). The function of the ECCS is to provide core cooling and negative reactivity to ensure that the reactor core is protected following certain accidents, such as LOCAs, SGTRs and loss of feedwater. There are two phases of ECCS operation: injection and recirculation. In the injection phase, borated water is injected into the RCS via the cold legs. After the blowdown stage of the LOCA stabilizes, injection flow is split equally between the hot and cold legs. After the RWST is depleted, the ECCS recirculation phase is entered as the ECCS suction is automatically transferred to the containment sump. TS require that in MODES 1, 2 and 3, with pressurizer pressure greater than or equal to [1700] psia, both redundant (100% capacity) ECCS trains must be operable. Each ECCS train consists of a high pressure safety injection (HPSI) subsystem, a low pressure safety injection (LPSI) subsystem and a charging subsystem.

Plant Applicability: Applicable to all OG member plants with CE NSSS designs.

Limiting Condition for Operation (LCO): Two redundant, 100% capacity LPSI trains must be operable in MODES 1 and 2 as well as in MODE 3 when the pressurizer pressure is greater than or equal to [1700] psia.

Condition Requiring Entry into Shutdown Required Action: When both LPSI trains are inoperable, the design basis assumptions for the large break LOCA analyses are not met and a default entry into LCO 3.0.3 is required.

Proposed Modification to Shutdown Required Actions: Add separate condition for both LPSI trains inoperable to restore at least one LPSI train to operable in 24 hours. In addition, with the proposed condition taken with the proposed changes to HPSI discussed below, the existing condition (STS LCO 3.5.2 Condition D) of ''Less than 100% of the ECCS flow equivalent to a single OPERABLE train available'' will no longer be required since that condition will be addressed by the conditions for two HPSI

subsystems inoperable or two LPSI subsystems inoperable.

Assessment: The risk assessment results (in Reference 2) indicate that the proposed 24-hour completion time for restoring one LPSI train will not lead to a significant increase in risk and may actually decrease risk. The risk impact of the proposed completion time extension, without credit for avoiding the transition to shutdown risk, was assessed to be well within the acceptance criteria reported in Regulatory Guides 1.174 and 1.177. Specifically, the proposed completion time extension would lead to the following risk increases: (1) The probability of core damage will increase by about 1E–7, which is less than the numerical guideline of 5E–7 for ICCDP; (2) the CDF will increase by about 2E–8/year, which is significantly less than the acceptance guideline of 1E–6/year for ΔCDF; (3) the large early release probability will increase by about 4E–10, which is much less than the numerical guideline of 5E–8 for ICLERP; and (4) the LERF will increase by about 8E–11/year, which is much less than the acceptance guideline of 1E–7/year for ΔLERF. Furthermore, the proposed completion time extension would, most likely, result in a risk reduction if credit for avoiding the transition to shutdown risk is taken.

The risk impact argument is also supported by the following defense-in-depth discussion. The primary impact of the unavailability of the LPSI system will be the reduction in the capability of the plant to provide RCS inventory makeup to mitigate a large LOCA. However, the unavailability of the LPSI system will impair the ability of the plant to maneuver to shutdown cooling. Therefore, the proposed 24-hour completion time to repair one LPSI train is reasonable due to the very small incremental risk associated with the continued plant operation at power and the inadvisability of a plant shutdown without the LPSI pumps which are needed for shutdown cooling.

STS LCO 3.5.2 Condition D requires that for a condition where the ECCS flow is less than 100% of the ECCS flow assumed in the LOCA analysis. WCAP–16125–NP proposed to delete this condition because it would no longer be necessary, based on the new conditions for two HPSI trains or two LPSI trains inoperable. The NRC staff has concluded that an adequate basis has not been provided to justify the deletion of STS LCO 3.5.2 Condition D. Specifically, licensees should discuss the functions of the HPSI and LPSI systems in terms of reactivity control, RCS inventory control, RCS pressure control, and core heat removal for system operations such as safety injection and recirculation, hot leg injection and once through core cooling to mitigate the consequences of LOCAs, SLB, and SGTR events. The licensees should also discuss the safety and nonsafety related accident mitigation systems, and show that, for a condition when the ECCS flow is less than 100% of the ECCS flow equivalent to a single OPERABLE train, alternative flow injection systems and backup accident management strategies are available and effective. Licensees should also list specific compensatory measures (including a description of pertinent operating procedures, maintenance process and training programs) and contingency plans with acceptable justification for the proposed deletion of STS LCO 3.5.2 Condition D.

Finding: The requested change to increase the time available to restore an LPSI train to operable is acceptable. The proposed change to delete STS LCO 3.5.2 Condition D needs to be adequately justified on a plant-specific basis.

Tier 2 Restrictions: None.

3.2.5 High Pressure Safety Injection (STS LCO 3.5.2)

The high pressure safety injection system is part of the ECCS. The function of the ECCS is to provide core cooling and negative reactivity to ensure that the reactor core is protected following certain accidents, such as LOCAs, SGTRs and loss of feedwater. There are two phases of ECCS operation: injection and recirculation. In the injection phase, borated water is injected into the RCS via the cold legs. After the blowdown stage of the LOCA stabilizes injection flow is split equally between the hot and cold legs. After the RWST is depleted, the ECCS recirculation phase is entered as the ECCS suction is automatically transferred to the containment sump. TS require that in MODES 1, 2 and 3, with pressurizer pressure greater than or equal to [1700] psia, both redundant (100% capacity) ECCS trains must be operable. Each ECCS train consists of a high pressure safety injection subsystem, a low pressure safety injection subsystem and a charging subsystem.

Plant Applicability: Applicable to all OG member plants with CE NSSS designs.

Limiting Condition for Operation (LCO): In MODES 1 and 2 as well as in MODE 3 when the pressurizer pressure is greater than or equal to [1700] psia, both trains of HPSI must be operable.

Condition Requiring Entry into Shutdown Required Action: When both HPSI trains are inoperable, a default entry into LCO 3.0.3 is required.

Proposed Modification to Shutdown Required Actions: Increase the time for restoring one HPSI pump or subsystem, before initiating shutdown per LCO 3.0.3, to four hours.

Assessment: The risk assessment results (in Reference 2) indicate that the proposed 4-hour completion time for the actions required by TS before entering LCO 3.0.3 will not lead to a significant increase in risk and, actually, may decrease risk by avoiding the risk associated with the transition to shutdown. The risk impact of the proposed completion time extension, without credit for avoiding the transition to shutdown risk, was assessed to be in agreement with the acceptance guidelines reported in Regulatory Guides 1.174 and 1.177. Specifically, the proposed completion time extension would lead to the following risk increases: (1) An ICCDP of 1.7E–6 for plants with PORVs and 1.1E–6 for plants without PORVs, which are close to the numerical guideline of 5E–7 for ICCDP used in RG 1.177; (2) a ΔCDF of 3.5E–7/year for plants with PORVs and 2.1E–7 for plants without PORVs, which are significantly less than the acceptance guideline of 1E–6/year for ΔCDF; (3) an ICLERP of about 4E–8 for plants with PORVs and less than 3E–8 for plants without PORVs, which are less than the numerical guideline of 5E–8 for ICLERP; and (4) a ΔLERF of about 8E–9/year for plants with PORVs and about 5E–9 for plants without PORVs, which are much less than the acceptance guideline of 1E–7/year for ΔLERF. Furthermore, the proposed time extension may actually be risk neutral or result in a decrease in risk if credit for avoiding the transition to shutdown risk is taken.

The risk impact argument is also supported by the following defense-in-depth discussion. The subject LCO requires the operability of a number of independent subsystems. In many instances due to the redundancy of trains and the diversity of subsystems, the inoperability of one component in a train does not necessarily render the HPSI incapable of performing its function. Neither does the inoperability of two different components, each in a different train, necessarily result in a loss of function for the ECCS. Examples of typical inoperabilities would include the unavailability of a single header injection valve or degradation of HPSI delivery curves below minimum design basis levels. The proposed completion time extension allows for potential resolution of minor HPSI system inoperabilities and provides time to

prepare for a controlled plant shutdown without increasing the plant's risk significantly.

Finding: The requested change to allow four hours to resolve the inoperability and restore one pump or subsystem of HPSI capability before required to commence a plant shutdown per LCO 3.0.3, is acceptable.

Tier 2 Restrictions: None.

3.2.6 Containment (STS LCO 3.6.1)

The requirements stated in this LCO define the performance of the containment as a fission barrier. Specifically, LCO 3.6.1 requires that the containment maximum leakage rate be limited in accordance with 10 CFR part 50 Appendix J. Other LCOs place additional restrictions on containment air locks and containment isolation valves. The integrated effect of these TSs is to ensure that the containment leakage is well controlled within limits which assure that the post accident whole body and thyroid dose limits of 10 CFR 100.11 or 10 CFR 50.67, as applicable, are satisfied following a Maximum Hypothetical Accident (MHA) initiated from full power. Inability to meet this leakage limit renders the containment inoperable.

Plant Applicability: Applicable to all OG member plants with CE NSSS designs.

Limiting Condition for Operation (LCO): Containment shall be operable in MODES 1, 2, 3 and 4.

Condition Requiring Entry into Shutdown Required Action: Containment is declared to be inoperable due to excessive leakage, including leakage from air locks and isolation valves, for a time period greater than one hour. If the containment is not restored to operable status within one hour, a plant shutdown is required.

Proposed Modification to Shutdown Required Actions: Define a specific action to allow 8 hours to restore an inoperable containment to operable. Allow MODE 4 to become a designated end state for correcting containment impairments for conditions where the containment leakage is excessive due to reasons other than the inoperability of two or more containment isolation valves (CIVs) in the same flow paths.

Assessment: The risk assessment results (in Reference 2) indicate that the proposed 8-hour completion time for restoring an inoperable containment to operable status will not lead to a significant increase in risk and may actually decrease risk. The risk impact of the proposed completion time extension was assessed to be well within the acceptance criteria reported in Regulatory Guides 1.174 and 1.177. Specifically, the proposed time extension would lead to the following conservatively assessed risk increases: (1) The large early release probability will increase by about 9E–8, which is close to the numerical guideline of 5E–8 for ICLERP; and (2) the LERF will increase by about 2E–8/year, which is significantly less than the acceptance guideline of 1E–7/year for ΔLERF. Furthermore, the proposed completion time extension may actually be risk neutral or result in a decrease in risk if credit for avoiding the transition to shutdown risk is taken.

The proposed changes apply to containment conditions where containment integrity is essentially maintained and adequate ECCS net positive suction head (NPSH) is expected following an event. Containment ''leakage'' at or near design basis levels is not explicitly modeled in PRAs. The PRA implicitly requires that containment ''gross'' integrity must be available to ensure adequate NPSH for ECCS pumps. Even though the PRA models do not consider that containment ''leakage'' contributes to a large early release, the assessed risk impact of the proposed completion time extension is based on the assumption that all core damage events will proceed to a large early release.

The requirement for an immediate (within one hour) shutdown is based on the philosophy that inoperability of the containment is a violation of the plant design basis and, therefore, a plant shutdown must be initiated as soon as possible. The selection of one hour was based on the requirement for ''immediate shutdown'' and the assumption that one hour is adequate time for operators to effect shutdown plans. The goal was to place the plant in a condition where the health and safety of the public could be better assured. No specific risk assessments were performed. In fact, it is more appropriate from the health and safety objective viewpoint to consider the risk of continued plant operation as well as that introduced by the shutdown. In consideration of the total plant risk, it is more risk beneficial to allow a small increase in risk at power to resolve a TS inoperability rather than to undertake an immediate (within one hour) shutdown.

In addition to the completion time extension, it is also proposed that MODE 4 be allowed as the end state to repair the containment. This is supported by the following arguments. If accidents were to occur in MODE 4, resulting containment pressures would be significantly less than the design basis accident (DBA) conditions. Hence, leakage would be further reduced. While in MODE 4, the probability of LOCA or MSLB is significantly reduced from MODE 1 levels. The implied licensing basis assumption that MODE 5 is inherently of lower operational risk than MODE 4 is not supported by risk evaluations (Reference 8). MODE 5 risks are either about equal to or likely greater than equivalent risks in MODE 4, and therefore produce radiation releases to containment on par with those of MODE 4. Thus, remaining in MODE 4, while the containment excess leakage condition is being corrected, is an appropriate action.

The STS LCO 3.6.1 requirement that the plant be brought to MODE 5 end state is not based on consideration of risks. Accidents initiated from MODE 4 are far less challenging to the containment than those initiated from MODE 1. The lower energy content in MODE 4 results in containment pressures and potential leakage approximately one half of that associated with MODE 1 releases. Furthermore, by having the plant in a shutdown condition in advance, fission product releases are significantly reduced. Thus, while leakage restrictions should be maintained, MODE 4 leakage in excess of that allowed in MODE 1 can be safely allowed for a limited time sufficient to resolve the inoperability and return the plant to power operation.

From a deterministic perspective, MODE 4 with SG heat removal would maintain more mitigating systems available, as compared to MODE 5, to respond to loss of RCS inventory or decay heat removal events and therefore reduce the overall public risk. In MODE 4, the Safety Injection Actuation Signal (SIAS) and the Containment Isolation Actuation Signal (CIAS) will be available to aid the operators in responding to events that threaten the reactor or containment integrity. Therefore, the proposed TS end state change does not adversely affect the plant defense-in-depth.

Finding: The requested changes to (1) increase the time available to take action to restore the containment to 8 hours and (2) allow MODE 4 as the repair end state, are acceptable.

Tier 2 Restrictions: None.

3.2.7 Containment Spray System (STS LCO 3.6.6 A)

The containment spray (CS) and containment cooling (CC) systems provide containment atmosphere cooling to limit post accident pressure and temperature in containment to less than the design values. For most CE

NSSS design plants the containment sprays represent a portion of a diverse and redundant heat removal system. In addition to containment heat removal, CSs enhance post-accident fission product removal.

Plant Applicability: Applicable to all OG member plants with CE NSSS designs.

Limiting Condition for Operation (LCO): Two containment spray trains and two containment cooling (CAC or CARC) trains shall be operable in MODES 1, 2, 3 and [4].

Condition Requiring Entry into Shutdown Required Action: Inoperability of both CS trains or any combination of three or more trains inoperable (STS LCO 3.6.6.A Condition F), immediate entry into LCO 3.0.3 is required.

Proposed Modification to Shutdown Required Actions: (1) Increase the time available for restoring one CS train to 72 hours when at least one CARC train is available for containment heat removal; (2) increase the time available for restoring one CS train to 12 hours when two trains of the CARC system is unavailable for containment heat removal. Based on Table 5.2.3–2 of WCAP–16125–NP, STS LCO 3.6.6.A would be revised to allow shutdown modes of MODE 3 in 6 hours and MODE 5 in 36 hours versus the current requirement of immediate entry into LCO 3.0.3 if the Required Action and associated Completion Time not met.

Assessment: The risk assessment results (in Reference 2) indicate that the proposed 12-hour completion time for restoring one CS train when two trains of the CARC system is unavailable for containment heat removal before entering LCO 3.0.3 will not lead to a significant increase in risk and may actually decrease risk. The risk impact of the proposed completion time extension was assessed to be well within the acceptance criteria reported in Regulatory Guides 1.174 and 1.177. Specifically, the proposed completion time extension would lead to the following risk increases: (1) The probability of core damage will increase by less than 7E–7 which is close to the numerical guideline of 5E–7 for ICCDP used in RG 1.177; (2) the CDF will increase by about 1.4E–7/year (acceptance criteria for ΔCDF about 1E–6/year); (3) the large early release probability during the condition will increase by about 1E–8 (acceptance criteria for ICLERP is 5E–8); and (4) the LERF will increase by about 2.5E–9/year (acceptance criteria for ΔLERF is 1E–7/year). Furthermore, the proposed completion time extension may actually be risk neutral or result in a decrease in risk if credit for avoiding the transition to shutdown risk is taken.

When at least one CARC train is available for containment heat removal, the risk impact in terms of CDF and LERF is insignificant. However, credit is taken for post accident fission product removal by the CS system. The radiation release ''non-LER'' risk impact associated with the proposed increase of the time available for restoring one CS train to 72 hours was conservatively assessed. Specifically, the proposed completion time extension would lead to the following ''non-LER'' risk increases: (1) The probability of a ''non-LER'' release during the completion time extension would increase by about 8E–7; and (2) the ''non-LER'' frequency would increase by 1.6E–7/year. These increases in ''non-LER'' risk are slightly above the values used in the criteria discussed in Section 3.1 of this report. However, such increases in ''non-LER'' risk are still comparable in magnitude to what is considered acceptable for increases in the much higher consequence risks associated with core damage and large early release. Furthermore, the proposed completion time extension is definitely risk beneficial when the averted core damage and large early release risks associated with avoiding plant shutdown are taken into consideration.

In addition to the risk argument, the proposed 72-hour completion time is selected for compatibility with improved standard technical specification (STS) LCO 3.6.6B. STS LCO 3.6.6B calls for a Completion Time of 72 hours when two CS trains are inoperable (Condition C) and is applicable to conditions where the sprays are not credited for fission product removal. Inoperability of the CS or CARC will degrade the capability of the plant to respond to a containment threat. However, provided the other system is available the plant remains capable of controlling pressure. The loss of sprays will expose some plant equipment to beyond environmental qualification temperature limits should a MSLB occur. However, the probability of such an event during the proposed completion time extension is very small (about 1E–3/year or less than 1E–5 per 71 hours). Furthermore, the ability of the plant to cope with a MSLB event is not compromised.

Finding: The requested changes to (1) increase the time available for restoring one CS train to 72 hours when at least one CARC train is available for containment heat removal; and (2) increase the time available for restoring one CS train to 12 hours when two trains of the CARC system is unavailable for containment heat removal, are acceptable. The requested change described in Table 5.2.3–2 of WCAP–16125–NP, that is, STS LCO 3.6.6.A would be revised to allow shutdown modes of MODE 3 in 6 hours and MODE 5 in 36 hours versus the current requirement of immediate entry into LCO 3.0.3 if the Required Action and associated Completion Time is not met, was not justified in the topical report. Therefore, the proposed change is not acceptable without further justification.

Tier 2 Restrictions: None.

3.2.8 Iodine Cleanup System (ICS) (STS LCO 3.6.10)

The purpose of the ICS is to remove elemental iodine from the post-accident containment atmosphere. These systems were initially incorporated into plants in the belief that radiological iodine releases would be predominantly in elemental form. However, extensive research has indicated that most iodine will be released in the form of Cesium Iodine (CsI) particulates. Consequently, the actual impact of system functionality on actual public doses is negligible. ICS consists of two 100% capacity trains.

Plant Applicability: Calvert Cliffs 1 & 2, St Lucie 1 & 2.

Limiting Condition for Operation (LCO): Two ICS trains shall be operable in MODES 1, 2, 3 & 4.

Condition Requiring Entry into LCO 3.0.3: Both ICS trains inoperable. Currently a default entry into LCO 3.0.3 is required.

Proposed Modification to Shutdown Required Actions: Add a condition to (1) allow 24 hours to restore one train to operable status, and (2) allow MODE 4 as the final end state for repairing the inoperable system.

Assessment: The risk assessment results (in Reference 2) indicate that the proposed 24-hour completion time for restoring one train of ICS will not lead to a significant increase in risk and may actually decrease risk. The proposed completion time extension will not contribute to any risk increases, in terms of core damage and large early release. The radiation release ''non-LER'' risk impact associated with the proposed time increase was conservatively assessed. Specifically, the proposed completion time extension would lead to the following ''non-LER'' risk increases: (1) The probability of a ''non-LER'' release during the completion time extension would increase by about 2.6E–7; and (2) the ''non-LER'' frequency would increase by about 5.0E–8/year. These increases in ''non-LER'' risk, which are comparable in magnitude to what is considered

acceptable for core damage and large early release risk increases, are very small. Furthermore, the proposed completion time extension is risk beneficial when the averted core damage and large early release risks associated with avoiding plant shutdown are taken into consideration.

The proposed change to allow MODE 4 as the final end state for repairing the inoperable system is supported by risk assessments (Reference 8) which indicated that, in general, there is less risk associated with staying in MODE 4 to repair the inoperable system than proceeding to MODE 5. This is due to the fact that there are more systems available in MODE 4 than in MODE 5 to mitigate accidents initiated at shutdown and the risk of transition between MODES 4 and 5 is avoided.

The ICS functions together with the containment spray and the containment cooling systems following a design basis accident (DBA) that causes failure of the fuel cladding, and release of radioactive material (principally iodine) to the containment. The ICS is specifically designed to respond to the maximum hypothetical accident with a large assumed contribution due to elemental iodine. The DBAs that result in a release of radioactive iodine within containment are LOCA and MSLB or a control element assembly (CEA) ejection accident. In the analysis for each of these accidents, it is assumed that adequate containment leak tightness is present at event initiation to limit potential leakage to the environment. Additionally, it is assumed that the amount of radioactive iodine release is limited by reducing the iodine concentration in the containment atmosphere via use of containment sprays. The unavailability of the ICS will have no significant impact on anticipated radiological releases to the public or the control room. This is due to the fact that: (1) Iodine releases are predominantly particulate and removal via sprays and precipitation is effective, (2) availability of elemental iodine is low so that ICS has limited utility, and (3) containment leak tightness significantly limits potential releases. Significant release events that contribute to large early release, such as containment bypass and SGTR with loss of secondary isolation events, will bypass these filters regardless of their availability.

Finding: The requested changes to (1) increase the time available to restore one ICS train to 24 hours and (2) allow MODE 4 as the final end state, for cases when both ICS trains are inoperable, are acceptable.

Tier 2 Restrictions: None.

3.2.9 Shield Building Exhaust Air Cleanup System (STS LCO 3.6.13)

The shield building exhaust air cleanup system (SBEACS) provides radionuclide removal capability for fission products leaked into the shield building. The SBEACS consists of two separate and redundant trains. Each train includes a heater, cooling coils, a prefilter, a moisture separator, a high efficiency particulate air (HEPA) filter, an activated charcoal absorber section for removal of radionuclides and a fan. Ductwork, valves and/or dampers and instrumentation also form part of the system.

Plant Applicability: St Lucie 1 & 2, Waterford 3 and Millstone 2.

Limiting Condition for Operation (LCO): Two SBEACS trains shall be operable in MODES 1, 2, 3 and 4.

*Condition Requiring Entry into Shutdown Required Action:*Both SBEACS trains inoperable. Currently a default entry into LCO 3.0.3 is required.

Proposed Modification to Shutdown Required Actions: Add a condition to (1) allow 24 hours to take action for both SBEACS trains unavailable, and (2) allow MODE 4 as the final end state for repairing the inoperable system.

Assessment: The risk assessment results (in Reference 2) indicate that the proposed 24-hour completion time for restoring one train of SBEACS will not lead to a significant increase in risk and may actually decrease risk. The proposed completion time extension will not contribute to any risk increases, in terms of core damage and large early release. The radiation release ''non-LER'' risk impact associated with the proposed time increase was conservatively assessed. Specifically, the proposed completion time extension would lead to the following ''non-LER'' risk increases: (1) The probability of a ''non-LER'' release during the completion time extension would increase by about 2.6E–7; and (2) the ''non-LER'' frequency would increase by about 5.0E–8/year. These increases in ''non-LER'' risk, which are comparable in magnitude to what is considered acceptable for core damage and large early release risk increases, are very small. Furthermore, the proposed completion time extension is definitely risk beneficial when the averted core damage and large early release risks associated with avoiding plant shutdown are taken into consideration.

The proposed change to allow MODE 4 as the final end state for repairing the inoperable system is supported by risk assessments (Reference 8) which indicated that, in general, there is less risk associated with staying in MODE 4 to repair the inoperable system than proceeding to MODE 5. This is due to the fact that there are more systems available in MODE 4 than in MODE 5 to mitigate accidents initiated at shutdown and the risk of transition between MODES 4 and 5 is avoided.

The proposed changes are also supported by the following qualitative discussion. The SBEACS is required to ensure that the radioactive material leaking from the primary containment of a dual containment into the Shield Building (secondary containment) following a DBA are filtered and absorbed prior to exhausting to the environment. Loss of the SBEACS could cause site boundary doses, in the event of a DBA, to exceed the values given in the licensing basis. However, containment ''leakage'' at or near design basis levels is not explicitly modeled in PRAs. PRAs implicitly require that containment ''gross'' integrity must be available to ensure NPSH for ECCS pumps. In the PRA Level 2 models, containment ''leakage'' is not considered to contribute to large early release. If accidents were to occur in MODE 4, resulting containment pressures would be significantly less than the DBA conditions. Hence, leakage would be further reduced. In addition, while in MODE 4, the probability of LOCA and MSLB is significantly reduced from MODE 1 levels. By keeping the plant in MODE 4, operator actions required for entry into shutdown cooling and which introduce potential containment bypass risks are avoided.

Finding: The requested changes to (1) increase the time available to restore one SBEACS train to 24 hours and (2) allow MODE 4 as the final end state, for cases when both SBEACS trains are inoperable, are acceptable.

Tier 2 Restrictions: None.

3.2.10 Control Room Emergency Air Cleanup System (STS LCO 3.7.11)

The control room emergency air cleanup system (CREACS) provides a protected environment from which operators can control the plant following an uncontrolled release of radioactivity, chemicals or toxic gas. Alternate designations of this system include the acronyms CREACUS, CREACS, CREVAS, CREVS, or CREAFS. The current TS require operability of CREACS from MODE 1 through MODE 4 to support operator response to a DBA. The system's operability in MODES 5 and 6 may also be required at some plants for chemical and toxic gas concerns. The CREACS is needed to protect the control room (CR) in a wide variety of circumstances.

Plant Applicability: Applicable to all OG member plants with CE NSSS designs.

Limiting Condition for Operation (LCO): Two CREACS trains shall be operable in MODES 1, 2, 3 and 4 and during movement of [recently] irradiated fuel assemblies in MODES [5 and 6].

Condition Requiring Entry into Shutdown Required Action: Both trains inoperable for conditions other than inoperable control room boundary in MODES 1, 2, 3, and 4. Explicit entry into LCO 3.0.3 required (STS LCO 3.7.11 Condition F).

Proposed Modification to Shutdown Required Actions: (1) Increase the time available to take action to 24 hours (or the time to reach 5 REM, which may be less than 24 hours, from the radiation field associated with main steam safety valves lifting concurrent with a SGTR) for the cases in which both CREACS trains are unavailable, and (2) allow MODE 4 as the final end state for repairing the inoperable system. This modification applies to the radiation protection function only. Site specific validation is necessary to support extension to toxic gas and chemical protection functions.

Assessment: The risk assessment results (in Reference 2) indicate that the proposed 24-hour completion time for restoring one train of CREACS before entering LCO 3.0.3 will not lead to a significant increase in risk and may actually decrease risk. The proposed completion time extension will not contribute to any risk increases, in terms of core damage and large early release. The radiation release ''non-LER'' risk impact associated with the proposed time increase was conservatively assessed. Specifically, the proposed completion time extension would lead to the following ''non-LER'' risk increases: (1) The probability of a ''non-LER'' release during the completion time extension would increase by about 2.6E–7; and (2) the ''non-LER'' frequency would increase by about 5.0E–8/year. These increases in ''non-LER'' risk, which are comparable in magnitude to what is considered acceptable for core damage and large early release risk increases, are very small. Furthermore, the proposed completion time extension is definitely risk beneficial when the averted core damage and large early release risks associated with avoiding plant shutdown are taken into consideration.

The proposed change to allow MODE 4 as the final end state for repairing the inoperable system is not justified. STS LCO 3.7.11 Condition F has an explicit LCO 3.0.3 entry. WCAP–16125–NP does not provide justification for modifying Condition F Required Action from ''Enter LCO 3.0.3'' to an end state of MODE 4.

Finding: The requested change to increase the time available to take action to restore one CREACS train to 24 hours for the radiation protection function only is acceptable. The requested change to allow MODE 4 as the final end state, for cases when both CREACS trains are inoperable, is not justified in WCAP–16125–NP and is not acceptable.

Tier 2 Restrictions: None.

3.2.11 Control Room Emergency Air Temperature Control System (STS LCO 3.7.12)

The control room emergency air temperature control system (CREATCS) provides temperature control for the CR following isolation of the CR. The CREATCS consists of two independent, redundant trains that provide cooling and heating of recirculated CR air. Each train consists of heating coils, cooling coils, instrumentation and controls to provide for CR temperature control.

Plant Applicability: Applicable to Calvert Cliffs 1 & 2, Fort Calhoun, Palisades, PVNGS 1, 2, & 3, Waterford 3 and ANO 2. It is noted that cooling for the St Lucie units are included in the air cleanup system discussed in TS 3.7.11 but the cooling system arguments contained in this section apply to St Lucie Units 1 & 2.

Limiting Condition for Operation (LCO): Two CREATCS trains shall be operable in MODES 1, 2, 3 and 4 and during movement of [recently] irradiated fuel assemblies in MODES [5 and 6].

Condition Requiring Entry into Shutdown Required Action: Both trains inoperable in MODES 1, 2, 3, and 4 requires an explicit LCO 3.0.3 entry (STS LCO 3.7.12 Condition E).

Proposed Modification to Shutdown Required Actions: Modify STS LCO 3.7.12 Condition E to (1) increase the time available to take action under LCO 3.0.3 to 24 hours for the cases in which both CREATCS trains are unavailable, and (2) allow MODE 4 as the final end state for repairing the inoperable system.

Assessment: The risk assessment results (in Reference 2) indicate that the proposed 24-hour completion time for restoring one train of CREATCS before entering LCO 3.0.3 will not lead to a significant increase in risk and may actually decrease risk. The proposed completion time extension will not contribute to any risk increases, in terms of core damage and large early release. The radiation release ''non-LER'' risk impact associated with the proposed completion time increase was conservatively assessed. Specifically, the proposed completion time extension would lead to the following ''non-LER'' risk increases: (1) The probability of a ''non-LER'' release during the completion time extension would increase by about 2.6E–7; and (2) the ''non-LER'' frequency would increase by about 5.0E–8/year. These increases in ''non-LER'' risk, which are comparable in magnitude to what is considered acceptable for core damage and large early release risk increases, are very small. Furthermore, the proposed completion time extension is definitely risk beneficial when the averted core damage and large early release risks associated with avoiding plant shutdown are taken into consideration.

The proposed change to allow MODE 4 as the final end state for repairing the inoperable system is not justified. STS LCO 3.7.12 Condition E has an explicit LCO 3.0.3 entry. WCAP–16125–NP does not provide justification for modifying Condition E Required Action from ''Enter LCO 3.0.3'' to an end state of MODE 4.

Several short term actions associated with cooling the CR may be implemented to mitigate risk consequences further. These actions include use of portable fans and propping open doors. Several plants have such actions in procedures.

Finding: The requested change to increase the time available to take action to restore one CREATCS train to 24 hours is acceptable. The requested change to allow MODE 4 as the final end state, for cases when both trains are inoperable, is not justified in WCAP–16125–NP and is not acceptable.

Tier 2 Restrictions: None.

3.2.12 Emergency Core Cooling System (ECCS) Pump Room Exhaust Air Cleanup System (PREACS) (STS LCO 3.7.13)

The ECCS pump room exhaust air cleanup system (ECCS PREACS) is an emergency system that filters air from the area of the active Engineered Safety Features (ESF) components during the recirculation phase of a LOCA. The ECCS PREACS consists of two independent, redundant trains of equipment that provide filtering of air in the ECCS pump rooms during post-LOCA recirculation cooling.

Plant Applicability: Calvert Cliffs 1 & 2, St Lucie 1 & 2, Waterford 3. It is noted that at Waterford 3 the functions of the ECCS PREACS and Penetration Room Exhaust Air Cleanup System (PREACS), which is discussed below under LCO 3.7.15, are combined within the

Controlled Ventilation Area System (CVAS) TS.

Limiting Condition for Operation (LCO): Two ECCS PREACS trains shall be operable in MODES 1, 2, 3 and 4.

Condition Requiring Entry into Shutdown Required Action: Both trains inoperable, default entry into LCO 3.0.3.

Proposed Modification to Shutdown Required Actions: (1) Increase the time available to restore one train to 24 hours, and (2) allow MODE 4 as the final end state for repairing the inoperable system.

Assessment: The risk assessment results (in Reference 2) indicate that the proposed 24-hour completion time for restoring one train of ECCS PREACS will not lead to a significant increase in risk and may actually decrease risk. The proposed completion time extension will not contribute to any risk increases, in terms of core damage and large early release. The radiation release ''non-LER'' risk impact associated with the proposed completion time increase was conservatively assessed. Specifically, the proposed completion time extension would lead to the following ''non-LER'' risk increases: (1) The probability of a ''non-LER'' release during the completion time extension would increase by about 1.1E–7; and (2) the ''non-LER'' frequency would increase by about 2.0E–8/year. These increases in ''non-LER'' risk, which are comparable in magnitude to what is considered acceptable for core damage and large early release risk increases, are very small. Furthermore, the proposed completion time extension is definitely risk beneficial when the averted core damage and large early release risks associated with avoiding plant shutdown are taken into consideration.

The proposed change to allow MODE 4 as the final end state for repairing the inoperable system is supported by risk assessments (Reference 8) which indicated that, in general, there is less risk associated with staying in MODE 4 to repair the inoperable system than proceeding to MODE 5. This is due to the fact that there are more systems available in MODE 4 than in MODE 5 to mitigate accidents initiated at shutdown and the risk of transition between MODES 4 and 5 is avoided.

The unavailability of the ECCS PREACS only impacts radiation releases to the public when the ECCS recirculation is in progress during a LOCA. Since successful recirculation also implies successful event mitigation, the releases this system is designed to mitigate are relatively low.

Finding: The requested changes to (1) increase the time available to take action to restore one ECCS–PREACS train to 24 hours and (2) allow MODE 4 as the final end state, for cases when both trains are inoperable, are acceptable.

Tier 2 Restrictions: None.

3.2.13 Penetration Room Exhaust Air Cleanup System (PREACS) (STS LCO 3.7.15)

The Penetration Room Exhaust Air Cleanup System (PREACS) filters air from the penetration area between the containment and the auxiliary building. The PREACS consists of two independent, redundant trains. Each train consists of a heater, demister or prefilter, HEPA filter, activated charcoal absorber and a fan.

Plant Applicability: Calvert Cliffs 1 & 2, and Waterford 3. It is noted that at Waterford 3 the functions of the PREACS and ECCS PREACS, which is discussed above under LCO 3.7.13, are combined within the Controlled Ventilation Area System (CVAS) TS.

Limiting Condition for Operation (LCO): Two PREACS trains shall be operable in MODES 1, 2, 3 and 4.

Condition Requiring Entry into Shutdown Required Action: Both trains inoperable for reasons other than an inoperable penetration room boundary, default entry into LCO 3.0.3 is required.

Proposed Modification to Shutdown Required Actions: (1) Increase the time available to restore one train to 24 hours, and (2) allow MODE 4 as the final end state for repairing the inoperable system.

Assessment: The risk assessment results (in Reference 2) indicate that the proposed 24-hour completion time for restoring one train of PREACS will not lead to a significant increase in risk and may actually decrease risk. The proposed completion time extension will not contribute to any risk increases, in terms of core damage and large early release. The radiation release ''non-LER'' risk impact associated with the proposed completion time increase was conservatively assessed. Specifically, the proposed completion time extension would lead to the following ''non-LER'' risk increases: (1) The probability of a ''non-LER'' release during the completion time extension would increase by about 2.6E–7; and (2) the ''non-LER'' frequency would increase by about 5.0E–8/year. These increases in ''non-LER'' risk, which are comparable in magnitude to what is considered acceptable for core damage and large early release risk increases, are very small. Furthermore, the proposed completion time extension is definitely risk beneficial when the averted core damage and large early release risks associated with avoiding plant shutdown are taken into consideration.

The proposed change to allow MODE 4 as the final end state for repairing the inoperable system is supported by risk assessments (Reference 8) which indicated that, in general, there is less risk associated with staying in MODE 4 to repair the inoperable system than proceeding to MODE 5. This is due to the fact that there are more systems available in MODE 4 than in MODE 5 to mitigate accidents initiated at shutdown and the risk of transition between MODES 4 and 5 is avoided.

Finding: The requested changes to (1) increase the time available to take action to restore one PREACS train to 24 hours and (2) allow MODE 4 as the final end state, for cases when both trains are inoperable, are acceptable.

Tier 2 Restrictions: None.

3.3 Summary and Conclusions

The above requested changes are found acceptable by the staff. The staff approval applies only to operation as described and acceptably justified in References 2 and 8. To be consistent with the staff's approval, any licensee requesting to operate in accordance with TSTF–426, as approved in this safety evaluation, should commit to operate in accordance with WCAP–16446–NP, Rev 0, ''Actions to Preclude Entry into LCO 3.0.3 Implementation Guidance (PA–RMCS–0196),'' June 2005, which includes a requirement for the licensee to commit to adhere to the guidance of the revised Section 11 of NUMARC–93–01, Revision 3. The implementation guidance includes alternative systems that must be operable and compensating measures for the systems included in TSTF–426. The licensees shall update relevant operating procedures, maintenance procedures, and training programs to reflect this change.

The required action for conditions that imply a loss of function, is entry into LCO 3.0.3. Currently, upon entering LCO 3.0.3, one hour is allowed to prepare for an orderly shutdown before initiating a change in plant operation. The OG is proposing to define or modify various TS Conditions to accommodate extension of the currently required time of one hour to initiate plant shutdown for member plants with CE NSSS designs. The proposed extension, related to specific systems or components, is based on the system's risk significance. In addition, WCAP–16125–NP provides a proposal to modify several Required Action statements, related to specific systems or components, to allow for a MODE 4 (hot shutdown) end state for repair purposes of two-train redundant systems that do not have explicit LCO 3.0.3 entry requirements, when the time

requirements of the action statement for staying at power cannot be met.

The intent of the proposed TS changes is to provide needed flexibility in the performance of corrective maintenance during power operation to fully evaluate the situation or restore loss of function and at the same time enhance overall plant safety by:

- Avoiding unnecessary unscheduled plant shutdowns,
- Minimizing plant transitions and associated transition and realignment risks,
- Providing increased flexibility in scheduling and performing maintenance and surveillance activities, and
- Providing explicit guidance in areas that currently does not exist.

It should be noted that many of the proposed TS changes affect the existing plant shutdown requirements for plant conditions where the plant operation is not in explicit compliance with the plant design basis. The proposed actions provide a risk-informed process for establishing shutdown priorities aiming at reducing overall plant risk and increasing public health and safety protection. In performing the risk-informed assessments and interpreting the results, the following assumptions were made:

- A condition resulting in the inoperability of a system or component which currently results in the need for an immediate shutdown is a low frequency event.
- The frequency of events leading to LCO 3.0.3 is not expected to increase significantly following the proposed change because such events may be reportable and may require a licensee event report. In addition, events leading to LCO 3.0.3 are used in performance indicators and the reactor oversight program. Therefore, licensees will have no incentive to allow the current low frequency of these events to increase after the proposed extensions are granted.
- The risk incurred by increasing the required shutdown action time is controlled to acceptable levels using a risk informed approach that considers the component risk worth and offsetting benefits of avoiding plant transitions.

The risk impact of the proposed TS changes was assessed following the three-tiered approach recommended in RG 1.177 for evaluating proposed extensions in currently allowed Completion Times (CTs):

- The first tier involves the assessment of the change in plant risk due to the proposed TS change;
- The second tier involves the identification of potentially high-risk configurations that could exist if equipment in addition to that associated with the change were to be taken out of service simultaneously;
- The third tier involves the implementation of the proposed changes in conjunction with a configuration risk management program (CRMP).

The impact of each proposed system-specific TS change on defense-in-depth was evaluated in conjunction with the risk assessment results. Due to the nature of the plant conditions associated with the proposed TS changes (i.e., loss of a system's or component's function), the redundancy and diversity typically associated with ensuring the deterministic aspect of defense-in-depth position is not always strictly possible. In these cases defense-in-depth was considered by identifying specific restrictions to the implementation of the proposed changes. Such restrictions aim at (1) controlling the outage time for related equipment, (2) restricting activities which may challenge the unavailable systems or functions, (3) allowing only small time intervals for plant operation at power with a system or function unavailable, (4) using, whenever possible, contingency actions to limit concurrent outages, and (5) evaluating repair activities and alternatives.

Based on this integrated evaluation, the staff concludes that the proposed system-specific TS changes would at most lead to acceptably small risk increases. In addition, defense-in-depth is taken into consideration. This conclusion is a consequence of the low expected challenge frequency of the systems or functions associated with the proposed TS changes, the very short proposed exposure times to the specified plant conditions, the offsetting benefits of avoiding plant transitions, and the identification of specific restrictions to the implementation of the proposed changes.

4.0 Verifications and Commitments

In order to efficiently process incoming license amendment applications and ensure consistent implementation of the change by the various licensees, the NRC staff requested each licensee requesting the changes addressed by TSTF–426, Rev 0, using the CLIIP to address the following plant-specific regulatory commitments.

4.1 Each licensee should make a regulatory commitment to follow the implementation guidance of WCAP–16446–NP, Rev 0, ''Actions to Preclude Entry into LCO 3.0.3 Implementation Guidance (PA–RMCS–0196),'' June 2005.

4.2 Each licensee should make a regulatory commitment to follow Section 11 of NUMARC–93–01, Revision 3.

The licensee has made a regulatory commitment to follow the implementation guidance of WCAP–16446–NP and Section 11 of NUMARC–93–01, Revision 3.

The NRC staff finds that reasonable controls for the implementation and for subsequent evaluation of proposed changes pertaining to the above regulatory commitment(s) can be provided by the licensee's administrative processes, including its commitment management program. The NRC staff has agreed that NEI 99–04, Revision 0, ''Guidelines for Managing NRC Commitment Changes,'' provides reasonable guidance for the control of regulatory commitments made to the NRC staff (see Regulatory Issue Summary 2000–17, ''Managing Regulatory Commitments Made by Power Reactor Licensees to the NRC Staff,'' dated September 21, 2000). The NRC staff notes that NEI 99–04 establishes a voluntary reporting system for the operating data that is similar to the system established for the ROP PI program. Should the licensee choose to incorporate a regulatory commitment into the final safety analysis report or other document with established regulatory controls, the associated regulations would define the appropriate change-control and reporting requirements.

5.0 State Consultation

In accordance with the Commission's regulations, the [ ] State official was notified of the proposed issuance of the amendment. The State official had [(1) no comments or (2) the following comments—with subsequent disposition by the staff].

6.0 Environmental Consideration

The amendments change a requirement with respect to the installation or use of a facility component located within the restricted area as defined in 10 CFR part 20 and change surveillance requirements. The NRC staff has determined that the amendments involve no significant increase in the amounts and no significant change in the types of any effluents that may be released offsite, and that there is no significant increase in individual or cumulative occupational radiation exposure. The Commission has previously issued a proposed finding that the amendments involve no-significant-hazards-considerations, and there has been no public comment on the finding [FR].

Accordingly, the amendments meet the eligibility criteria for categorical exclusion set forth in 10 CFR 51.22(c)(9). Pursuant to 10 CFR 51.22(b), no environmental impact statement or environmental assessment need be prepared in connection with the issuance of the amendments.

7.0 Conclusion

The Commission has concluded, on the basis of the considerations discussed above, that (1) there is reasonable assurance that the health and safety of the public will not be endangered by operation in the proposed manner, (2) such activities will be conducted in compliance with the Commission's regulations, and (3) the issuance of the amendments will not be inimical to the common defense and security or to the health and safety of the public.

8.0 References

1. WCAP–16125–NP, Revision 0, ''Justification for Risk-Informed Modifications to Selected Technical Specifications for Conditions Leading to Exigent Plant Shutdown,'' October 3, 2003.

2. Beckner, William D., ''Safety Evaluation of WCAP–16125–NP, Rev 0, ''Justification for Risk-Informed Modifications to Selected Technical Specifications for Conditions Leading to Exigent Plant Shutdown,'' Letter to Gordon Bischoff, Westinghouse

3. TSTF–426, Revision 0, ''Revise or Add Actions to Preclude Entry into LCO 3.0.3,'' August 2004.

4. WCAP–16446–NP, Revision 0, ''Actions to Preclude Entry into LCO 3.0.3, Implementation Guidance,'' June 2005.

5. NUREG–1432, ''Standard Technical Specifications, Combustion Engineering Plants,'' Revision 2, USNRC, June 2001.

6. Regulatory Guide 1.174, ''An Approach for Using Probabilistic Risk Assessment in Risk-Informed Decision Making on Plant Specific Changes to the Licensing Basis,'' USNRC, August 1998.

7. Regulatory Guide 1.177, ''An Approach for Plant Specific Risk-Informed Decision Making: Technical Specifications,'' USNRC, August 1998.

8. CE–NPSD–1186, ''Technical Justification for the Risk-Informed Modification to Selected Required Action End States for CEOG PWRs,'' CE Owner's Group, April 2000.

9. Regulatory Guide 1.182, ''Assessing and Managing Risk Before Maintenance Activities at Nuclear Power Plants,'' May 2000.

Attachment—For Inclusion on the Technical Specification Web Page

The following example of an application was prepared by the NRC staff to facilitate use of the consolidated line item improvement process (CLIIP). The model provides the expected level of detail and content for an application to adopt TSTF–426, Revision 0, ''Risk-Informed modifications to selected technical specifications for conditions leading to exigent plant shutdowns,'' for CE plants using CLIIP. Licensees remain responsible for ensuring that their actual application fulfills their administrative requirements as well as Nuclear Regulatory Commission regulations.

U.S. Nuclear Regular Commission, *Document Control Desk*, Washington, DC 20555.

Subject: Plant Name, Docket No. 50—Application for Technical Specification Change TSTF–426, Risk Informed Modification to Selected Technical Specifications for Conditions Leading to Exigent Plant Shutdowns Using the Consolidated Line Item Improvement Process

Gentleman: In accordance with the provisions of 10 CFR 50.90 [LICENSEE] is submitting a request for an amendment to the technical specifications (TS) for [PLANT NAME, UNIT NOS.].

The proposed amendment would modify TS to risk-inform requirements regarding selected technical specifications for conditions leading to exigent plant shutdowns.

Attachment 1 provides a description of the proposed change, the requested confirmation of applicability, and plant-specific verifications. Attachment 2 provides the existing TS pages marked up to show the proposed change. Attachment 3 provides revised (clean) TS pages. Attachment 4 provides a summary of the regulatory commitments made in this submittal. Attachment 5 provides the existing TS Bases pages marked up to show the proposed change (*for information only*).)

[LICENSEE] requests approval of the proposed license amendment by [DATE], with the amendment being implemented [BY DATE OR WITHIN X DAYS].

In accordance with 10 CFR 50.91, a copy of this application, with attachments, is being provided to the designated [STATE] Official.

I declare under penalty of perjury under the laws of the United States of America that I am authorized by [LICENSEE] to make this request and that the foregoing and the attachment are true and correct. (Note that request may be notarized in lieu of using this oath or affirmation statement).

If you should have any questions regarding this submittal, please contact [NAME, TELEPHONE NUMBER].

Sincerely,

[Name, Title]

Attachments:

1. Description and Assessment.
2. Proposed Technical Specification Changes.
3. Revised Technical Specification Pages.
4. Regulatory Commitments.
5. Proposed Technical Specification Bases Changes.

cc: NRC Project Manager
NRC Regional Office
NRC Resident Inspector
State Contact

Attachment 1—Description and Assessment

1.0 Description

The proposed amendment would modify technical specifications to risk-inform requirements regarding selected technical specifications for conditions leading to exigent plant shutdowns.

The changes are consistent with Nuclear Regulatory Commission (NRC) approved Industry/Technical Specification Task Force (TSTF) TSTF–426, Revision 0. The availability of this Technical Specification (TS) improvement was published in the **Federal Register** on [DATE] as part of the consolidated line item improvement process (CLIIP).

2.0 Assessment

2.1 Applicability of Topical Report, TSTF–426, and Published Safety Evaluation

[LICENSEE] has reviewed GE topical report (Reference 1), TSTF–426 (Reference 2), and the NRC model safety evaluation (Reference 3) as part of the CLIIP. [LICENSEE] has concluded that the information in the GE topical report and TSTF–426, as well as the safety evaluation prepared by the NRC staff are applicable to [PLANT, UNIT NOS.] and justify this amendment for the incorporation of the changes to the [PLANT] TS. [NOTE: Only those changes proposed in TSTF–426 are addressed in the model SE. The model SE and associated topical report address the entire fleet of CE plants, and the plants adopting TSTF–426 must confirm the applicability of the changes to their plant.]

2.2 Optional Changes and Variations

[LICENSEE] is not proposing any variations or deviations from the GE

topical report and the TS changes described in the TSTF–426, Revision 0 or the NRC staff's model safety evaluation dated [DATE]. [NOTE: The CLIIP does not prevent licensees from requesting an alternate approach or proposing changes without the requested Bases or Bases control program. However, deviations from the approach recommended in this notice may require additional review by the NRC staff and may increase the time and resources needed for the review. Significant variations from the approach, or inclusion of additional changes to the license, will result in staff rejection of the submittal. Instead, licensees desiring significant variations and/or additional changes should submit a LAR that does not claim to adopt TSTF–426.]

3.0 Regulatory Analysis

3.1 No Significant Hazards Consideration Determination

[LICENSEE] has reviewed the proposed no significant hazards consideration determination (NSHCD) published in the **Federal Register** as part of the CLIIP. [LICENSEE] has concluded that the proposed NSHCD presented in the **Federal Register** notice is applicable to [PLANT] and is hereby incorporated by reference to satisfy the requirements of 10 CFR 50.91(a).

3.2 Verification and Commitments

As discussed in the notice of availability published in the **Federal Register** on [DATE] for this TS improvement, plant-specific verifications were performed as follows:

[LICENSEE] commits to the regulatory commitments in Attachment 4. In addition, [LICENSEE] has proposed TS Bases consistent with the Westinghouse topical report and TSTF–426, which provide guidance and details on how to implement the new requirements. Implementation of TSTF–426 requires that risk be managed and assessed, and the licensee's configuration risk management program is adequate to satisfy this requirement. The risk assessment need not be quantified, but may be a qualitative assessment of the vulnerability of systems and components when one or more systems are not able to perform their associated function.

4.0 Environmental Evaluation

The amendment changes requirements with respect to the installation or use of a facility component located within the restricted area as defined in 10 CFR part 20. The NRC staff has determined that the amendment adopting TSTF–426, Rev. 0, involves no significant increase in the amounts and no significant change in the types of any effluents that may be released offsite, and that there is no significant increase in individual or cumulative occupational radiation exposure. The Commission has previously issued a proposed finding that TSTF–426, Rev. 0, involves no significant hazards considerations, and there has been no public comment on the finding in **Federal Register** Notice [# and [DATE]]. Accordingly, the amendment meets the eligibility criteria for categorical exclusion set forth in 10 CFR 51.22(c)(9). Pursuant to 10 CFR 51.22(b), no environmental impact statement or environmental assessment need be prepared in connection with the issuance of the amendment.

5.0 References

1. WCAP–16125–NP, Revision 0, ''Justification for Risk-Informed Modifications to Selected Technical Specifications for Conditions Leading to Exigent Plant Shutdown,'' October 3, 2003.

2. TSTF–426, Revision 0, ''Revise or Add Actions to Preclude Entry into LCO 3.0.3,'' August 2004.

3. **Federal Register**, Vol. XX, No. XX, p. XXXXX, ''Notice of Availability of Model Application Concerning Technical Specification Improvement for Combustion Engineering Plants To Risk-Inform Requirements Regarding Conditions Leading to Exigent Plant Shutdown Using the Consolidated Line Item Improvement Process,'' [DATE].

Attachment 2—Proposed Technical Specification Changes (Mark-Up)

Attachment 3—Proposed Technical Specification Pages

[Clean copies of Licensee specific Technical Specification (TS) pages, corresponding to the TS pages changed by TSTF–426, Rev. 0, are to be included in Attachment 3]

Attachment 4—List of Regulatory Commitments

The following table identifies those actions committed to by [LICENSEE] in this document. Any other statements in this submittal are provided for information purposes and are not considered to be regulatory commitments. Please direct questions regarding these commitments to [CONTACT NAME].

Regulatory commitments	Due date/event
[LICENSEE] will follow the guidance established in Section 11 of NUMARC 93–01, ''Industry Guidance for Monitoring the Effectiveness of Maintenance at Nuclear Power Plants,'' Nuclear Management and Resource Council, Revision 3, July 2000.	[Ongoing, or implement with amendment].
[LICENSEE] will follow the guidance established in WCAP–16446–NP, Revision [No.] ''Actions to Preclude Entry into LCO 3.0.3, Implementation Guidance,'' [DATE].	[Implement with amendment, when TS Required Action End State remains within the APPLICABILITY of TS].

Attachment 5—Proposed Changes to Technical Specification Bases Pages

Proposed No Significant Hazards Consideration Determination

Description of Amendment Request: On August 30, 2004, the Owners Group (OG) Technical Specifications Task Force (TSTF) submitted a proposed change, TSTF–426, Revision 0 (Rev. 0), to the Combustion Engineering (CE) standard technical specifications (STS) (NUREG–1432) on behalf of the industry. TSTF–426, Rev. 0, is a proposal to incorporate WCAP–16125–NP, Rev. 0, of September 2003, ''Justification for the Risk Informed Modifications to Selected Technical Specifications for Conditions Leading to Exigent Plant Shutdown,'' which was approved by an NRC safety evaluation (SE) dated July 9, 2004 into the CE STS. This proposal is part of Nuclear Energy Institute (NEI) Risk Informed Technical Specifications Task Force (RITSTF) Initiative 6, one of the industry's initiatives being developed under the Risk Management Technical Specifications (RMTS) program.

WCAP–16125–NP, Rev. 0 provides technical justification for the modification of various TS to define and/or modify Actions to extend the time required to initiate a plant shutdown from 1 hour in accordance with LCO 3.0.3 to a risk-informed time

varying from 4 hours to 72 hours. The intent of the proposed modifications to the plant TS is to enhance overall plant safety by:

a. Avoiding unnecessary plant shutdowns.

b. Minimizing plant transitions and associated transition and realignment risks.

c. Providing for increased flexibility in scheduling and performing maintenance and surveillance activities.

d. Providing explicit guidance where none currently exists.

Basis for proposed no-significant-hazards-consideration determination: As required by 10 CFR 50.91(a), an analysis of the issue of no-significant-hazards-consideration is presented below:

Criterion 1—The Proposed Change Does Not Involve a Significant Increase in the Probability or Consequences of an Accident Previously Evaluated

The proposed change provides a short Completion Time to restore an inoperable system for conditions under which the existing Technical Specifications require a plant shutdown to begin within one hour in accordance with Limiting Condition for Operation (LCO) 3.0.3. Entering into Technical Specification Actions is not an initiator of any accident previously evaluated. As a result, the probability of an accident previously evaluated is not significantly increased. The consequences of any accident previously evaluated that may occur during the proposed Completion Times are no different from the consequences of the same accident during the existing one hour allowance. As a result, the consequences of any accident previously evaluated are not significantly increased. Therefore, the proposed change does not involve a significant increase in the probability or consequences of an accident previously evaluated.

Criterion 2—The Proposed Change Does Not Create the Possibility of a New or Different Kind of Accident From Any Previously Evaluated

No new or different accidents result from utilizing the proposed change. The changes do not involve a physical alteration of the plant (i.e., no new or different type of equipment will be installed) or a change in the methods governing normal plant operation. In addition, the changes do not impose any new or different requirements. The changes do not alter assumptions made in the safety analysis. Therefore, the proposed change does not create the possibility of a new or different kind of accident from any previously evaluated.

Criterion 3—The Proposed Change Does Not Involve a Significant Reduction in the Margin of Safety

The proposed change increases the time the plant may operate without the ability to perform an assumed safety function. The analyses in WCAP–16125–NP, Rev. 0, ''Justification for Risk-Informed Modifications to Selected Technical Specifications for Conditions Leading to Exigent Plant Shutdown,'' Revision 0, September 2003, demonstrated that there is an acceptably small increase in risk due to a limited period of continued operation in these conditions and that this risk is balanced by avoiding the risks associated with a plant shutdown. As a result, the change to the margin of safety provided by requiring a plant shutdown within one hour is not significant. Therefore, the proposed change does not involve a significant reduction in a margin of safety.

Based upon the reasoning presented above and the previous discussion of the amendment request, the requested change does not involve a significant hazards consideration.

Dated at Rockville, Maryland, this 13th day of July 2006.

For the Nuclear Regulatory Commission.

Carl S. Schutlen,

Chief, Technical Specifications Branch, Division of Inspection & Regional Support, Office of Nuclear Reactor Regulation.

[FR Doc. 06–6364 Filed 7–19–06; 8:45 am]

BILLING CODE 7590–01–P

SECURITIES AND EXCHANGE COMMISSION

Proposed Collection; Comment Request

Upon Written Request, Copies Available From: Securities and Exchange Commission, Office of Filings and Information Services, Washington, DC 20549.

Extension:

Rules 17h–1T and 17h–2T, SEC File No. 270–359, OMB Control No. 3235–0410.

Notice is hereby given that pursuant to the Paperwork Reduction Act of 1995 (44 U.S.C. 3501 *et seq.*) the Securities and Exchange Commission (''Commission'') has submitted to the Office of Management and Budget requests for extension of the previously approved collections of information discussed below. The Code of Federal Regulation citations to this collection of information are the following rules: 17 CFR 240.17h–1T and 17 CFR 240.17h–2T under the Securities Exchange Act of 1934 (17 U.S.C. 78a *et seq.*) (the ''Act'').

Rule 17h–1T requires a broker-dealer to maintain and preserve records and other information concerning certain entities that are associated with the broker-dealer. This requirement extends to the financial and securities activities of the holding company, affiliates and subsidiaries of the broker-dealer that are reasonably likely to have a material impact on the financial or operational condition of the broker-dealer. Rule 17h–2T requires a broker-dealer to file with the Commission quarterly reports and a cumulative year-end report concerning the information required to be maintained and preserved under Rule 17h–1T.

The collection of information required by Rules 17h–1T and 17h–2T is necessary to enable the Commission to monitor the activities of a broker-dealer affiliate whose business activities is reasonably likely to have a material impact on the financial and operational condition of the broker-dealer. Without this information, the Commission would be unable to assess the potentially damaging impact of the affiliate's activities on the broker-dealer.

There are currently 200 respondents that must comply with Rules 17h–1T and 17h–2T. Each of these 200 respondents require approximately 10 hours per year, or 2.5 hours per quarter, to maintain the records required under Rule 17h–1T, for an aggregate annual burden of 2,000 hours (200 respondents × 10 hours). In addition, each of these 200 respondents must make five annual responses under Rule 17h–2T. These five responses require approximately 14 hours per respondent per year, or 3.5 hours per quarter, for an aggregate annual burden of 2,800 hours (200 respondents × 14 hours). In addition, there are approximately five new respondents per year that must draft an organizational chart required under Rule 17h–1T and establish a system for complying with the Rules. The staff estimates that drafting the required organizational chart requires one hour and establishing a system for complying with the Rules requires three hours, thus requiring an aggregate of 20 hours (5 new respondents × 4 hours). Thus, the total compliance burden per year is approximately 4,820 burden hours (2,000 + 2,800 + 20).

Written comments are invited on: (a) Whether the proposed collection of information is necessary for the proper performance of the functions of the agency, including whether the information will have practical utility; (b) the accuracy of the agency's estimate of the burden of the collection of information; (c) ways to enhance the quality, utility, and clarity of the

information collected; and (d) ways to minimize the burden of the collection of information on respondents, including through the use of automated collection techniques or other forms of information technology. Consideration will be given to comments and suggestions submitted in writing within 60 days of this publication.

Comments should be directed to: R. Corey Booth, Director/Chief Information Officer, Securities and Exchange Commission, C/O Shirley Martinson, 6432 General Green Way, Alexandria, Virginia 22312 or send an e-mail to: *PRA_Mailbox@sec.gov*. Comments must be submitted to OMB within 60 days of this notice.

Dated: July 11, 2006.

J. Lynn Taylor,

Assistant Secretary.

[FR Doc. E6–11494 Filed 7–19–06; 8:45 am]

BILLING CODE 8010–01–P

SECURITIES AND EXCHANGE COMMISSION

Proposed Collections; Comment Request

Upon Written Request, Copies Available From: Securities and Exchange Commission, Office of Filings and Information Services, Washington, DC 20549.

Extensions:

Form 18, OMB Control No. 3235–0121, SEC File No. 270–105, Form F–80, OMB Control No. 3235–0404, SEC File No. 270–357.

Notice is hereby given that pursuant to the Paperwork Reduction Act of 1995 (44 U.S.C. 3501 *et seq.*) the Securities and Exchange Commission (''Commission'') is soliciting comments on the collections of information summarized below. The Commission plans to submit these existing collections of information to the Office of Management Budget for extension and approval.

Form 18 (17 CFR 249.218) is used for the registration of securities of any foreign government or political subdivision on a U.S. exchange. The information collected is intended to ensure that the information required to be filed by the Commission permits verification of compliance with securities law requirements and assures the public availability of the information. Form 18 takes approximately 8 hours per response and is filed by approximately 5 respondents for a total of 40 annual burden hours. It is estimated that 100% of the total reporting burden is prepared by the company.

Form F–80 (17 CFR 239.41) is used by large publicly traded Canadian foreign private issuers registering securities offered in business combinations and exchange offers. The information collected is intended to ensure that the information required to be filed by the Commission permits verification of compliance with securities law requirements and assures the public availability of the information. Form F–80 takes approximately 2 hours per response and is filed by 4 issuers for a total annual burden of 8 hours. The estimated burden of 2 hours per response was based upon the amount of time necessary to compile the registration statement using the existing Canadian prospectus plus any additional information required by the Commission.

Written comments are invited on: (a) Whether these proposed collections of information are necessary for the proper performance of the functions of the agency, including whether the information will have practical utility; (b) the accuracy of the agency's estimate of the burden imposed by the collections of information; (c) ways to enhance the quality, utility, and clarity of the information collected; and (d) ways to minimize the burden of the collections of information on respondents, including through the use of automated collection techniques or other forms of information technology. Consideration will be given to comments and suggestions submitted in writing within 60 days of this publication.

Please direct your written comments to R. Corey Booth, Director/Chief Information Officer, Securities and Exchange Commission, C/O Shirley Martinson, 6432 General Green Way, Alexandria, Virginia 22312; or send an e-mail to: *PRA_Mailbox@sec.gov*.

Dated: June 28, 2006.

J. Lynn Taylor,

Assistant Secretary.

[FR Doc. E6–11495 Filed 7–19–06; 8:45 am]

BILLING CODE 8010–01–P

SECURITIES AND EXCHANGE COMMISSION

Proposed Collection; Comment Request

Upon Written Request, Copies Available From: Securities and Exchange Commission, Office of Filings and Information Services, Washington, DC 20549.

Extension: Form SB–1; OMB Control No. 3235–0423; SEC File No. 270–374.

Notice is hereby given that pursuant to the Paperwork Reduction Act of 1995 (44 U.S.C. 3501 *et seq.*) the Securities and Exchange Commission (''Commission'') is soliciting comments on the collection of information summarized below. The Commission plans to submit this existing collection of information to the Office of Management and Budget for extension and approval.

Small business issuers use Form SB–1 (17 CFR 239.9), as defined in Rule 405 (17 CFR 230.405) of the Securities Act of 1933 (''Securities Act'') (15 U.S.C. 77a *et seq.*), to register up to $10 million of securities to be sold for cash, if they have not registered more than $10 million in securities offerings in any continuous 12-month period, including the transaction being registered. The information to be collected is intended to ensure the adequacy of information available to investors in the registration of securities and assures public availability of the information. Approximately 17 respondents file Form SB–1 annually at an estimated 708 hours per response for a total of 12,036 annual burden hours. We further estimate that 25% of the total burden (3,009 hours) is prepared by the company and the remaining 75% of the total burden hours is prepared by outside counsel retained by the company.

Written comments are invited on: (a) Whether this proposed collections of information is necessary for the proper performance of the functions of the agency, including whether the information will have practical utility; (b) the accuracy of the agency's estimate of the burden of the collection of information collection information; (c) ways to enhance the quality, utility, and clarity of the information collected; and (d) ways to minimize the burden of the collection of information on respondents, including through the use of automated collection techniques or other forms of information technology. Consideration will be given to comments and suggestions submitted in writing within 60 days of this publication.

Please direct your written comments to R. Corey Booth, Director/Chief Information Officer, Securities and Exchange Commission, C/O Shirley Martinson 6432 General Green Way, Alexandria, Virginia 22312; or send an e-mail to: *PRA_Mailbox@sec.gov*.

Dated: June 28, 2006.

J. Lynn Taylor,

Assistant Secretary.

[FR Doc. E6–11496 Filed 7–19–06; 8:45 am]

BILLING CODE 8010–01–P

SECURITIES AND EXCHANGE COMMISSION

Proposed Collection; Comment Request

Upon Written Request, Copies Available From: Securities and Exchange Commission, Office of Filings and Information Services, Washington, DC 20549–0007.

Extension: Form 13F; SEC File No. 270–22; OMB Control No. 3235–0006.

Notice is hereby given that, pursuant to the Paperwork Reduction Act of 1995 (44 U.S.C. 3501–3520), the Securities and Exchange Commission (the ''Commission'') is soliciting comments on the collection of information summarized below. The Commission plans to submit this collection of information to the Office of Management and Budget (''OMB'') for extension and approval.

Section 13(f) [1] of the Securities Exchange Act of 1934 [2] (the ''Exchange Act'') empowers the Commission to: (1) Adopt rules that create a reporting and disclosure system to collect specific information; and (2) disseminate such information to the public. Rule 13f–1 [3] under the Exchange Act requires institutional investment managers that exercise investment discretion over accounts—having in the aggregate a fair market value of at least $100,000,000 of exchange-traded or NASDAQ-quoted equity securities—to file quarterly reports with the Commission on Form 13F.[4]

The information collection requirements apply to institutional investment managers that meet the $100 million reporting threshold. Section 13(f)(5) of the Exchange Act defines an ''institutional investment manager'' as any person, other than a natural person, investing in or buying and selling securities for its own account, and any person exercising investment discretion with respect to the account of any other person. Form 13F under the Exchange Act defines ''investment discretion'' for purposes of Form 13F reporting.

The reporting system required by Section 13(f) of the Exchange Act is intended, among other things, to create in the Commission a central repository of historical and current data about the investment activities of institutional investment managers, and to improve the body of factual data available to regulators and the public.

The Commission staff estimates that 3,378 respondents make approximately 13,512 responses under the rule each year. The staff estimates that on average, Form 13F filers spend 98.8 hours/year to prepare and submit the report. In addition, the staff estimates that 336 respondents file approximately 1,344 amendments each year. The staff estimates that on average, Form 13F filers spend 4 hours/year to prepare and submit amendments to Form 13F. The total annual burden of the rule's requirements for all respondents therefore is estimated to be 335,090 hours ((3,378 filers × 98.8 hours) + (336 filers × 4 hours)).

The estimate of average burden hours is made solely for the purposes of the Paperwork Reduction Act. The estimate is not derived from a comprehensive or even a representative survey or study of the costs of Commission rules. An agency may not conduct or sponsor, and a person is not required to respond to, a collection of information unless it displays a currently valid control number.

Written comments are invited on: (a) Whether the collections of information are necessary for the proper performance of the functions of the Commission, including whether the information has practical utility; (b) the accuracy of the Commission's estimate of the burdens of the collections of information; (c) ways to enhance the quality, utility, and clarity of the information collected; and (d) ways to minimize the burdens of the collections of information on respondents, including through the use of automated collection techniques or other forms of information technology. Consideration will be given to comments and suggestions submitted in writing within 60 days of this publication.

Please direct your written comments to R. Corey Booth, Director/Chief Information Officer, Securities and Exchange Commission, C/O Shirley Martinson 6432 General Green Way, Alexandria, Virginia 22312; or send an e-mail to: *PRA_Mailbox@sec.gov.*

Dated: June 20, 2006.

J. Lynn Taylor,

Assistant Secretary.

[FR Doc. E6–11497 Filed 7–19–06; 8:45 am]

BILLING CODE 8010–01–P

SECURITIES AND EXCHANGE COMMISSION

Submission for OMB Review; Comment Request

Upon Written Request, Copies Available From: Securities and Exchange Commission, Office of Filings and Information Services, Washington, DC 20549.

Extension: Rule 17Ac2–2; SEC File No. 270–298; OMB Control No. 3235–0337; Form TA–2; SEC File No. 270–298; OMB Control No. 3235–0337.

Notice is hereby given that pursuant to the Paperwork Reduction Act of 1995 (44 U.S.C. 3501 *et seq.*), the Securities and Exchange Commission (''Commission'') has submitted to the Office of Management and Budget a request for extension of the previously approved collection of information discussed below.

Rule 17Ac2–2 and Form TA–2; OMB Control No. 3235–0337; SEC File No. 270–298

Rule 17Ac2–2 (17 CFR 240.17Ac2–2) and Form TA–2 (15 CFR 249b.102) under the Securities Exchange Act of 1934 (17 U.S.C. 78a *et seq.*) require transfer agents to file an annual report of their business activities with the Commission. The amount of time needed to comply with the requirements of Rule 17Ac2–2 and Form TA–2 varies. From the total 786 registered transfer agents, approximately 197 registrants would be required to complete only Questions 1 through 4 and the signature section of amended Form TA–2, which we estimate would take each registrant about 30 minutes, for a total burden of 99 hours (197 × .5 hours). Approximately 262 registrants would be required to answer Questions 1 through 5, 10, and 11 and the signature section, which we estimate would take about 1 hour and 30 minutes, for a total of 393 hours (262 × 1.5 hours). The remaining registrants, approximately 327, would be required to complete the entire Form TA–2, which we estimate would take about 6 hours, for a total of 1,962 hours (327 × 6 hours). We estimate that the total burden would be 2,454 hours (99 hours + 393 hours + 1,962 hours).

We estimate that the total cost of reviewing and entering the information reported on the Forms TA–2 for respondents is $31.50 per hour. The Commission estimates that the total cost would be $77,301.00 annually ($31.50 × 2,454).

Rule 17Ac2–2 does not involve the collection of confidential information. Please note that an agency may not conduct or sponsor, and a person is not required to respond to, a collection of information unless it displays a currently valid control number.

General comments regarding the estimated burden hours should be directed to the following persons: (i) David Rostker, Desk Officer for the

[1] 15 U.S.C. 78m(f).

[2] 15 U.S.C. 78a *et seq.*

[3] 17 CFR 240.13f–1.

[4] 17 CFR 249.325.

Securities and Exchange Commission, Office of Information and Regulatory Affairs, Office of Management and Budget, Room 10102, New Executive Office Building, Washington, DC 20503 or by sending an e-mail to: *David_Rostker@omb.eop.gov*; and (ii) R. Corey Booth, Director/Chief Information Officer, Securities and Exchange Commission, C/O Shirley Martinson, 6432 General Green Way, Alexandria, Virginia 22312; or by sending an e-mail to: *PRA_Mailbox@sec.gov.* Comments must be submitted to OMB within 30 days of this notice.

Dated: June 29, 2006

J. Lynn Taylor,

Assistant Secretary.

[FR Doc. E6–11498 Filed 7–19–06; 8:45 am]

BILLING CODE 8010–01–P

SECURITIES AND EXCHANGE COMMISSION

Submission for OMB Review, Comment Request

Upon Written Request, Copies Available From: Securities and Exchange Commission Office of Filings and Information Services, Washington, DC 20549.

Extension: Rule 17a–8; SEC File No. 270–53; OMB Control No. 3235–0092.

Notice is hereby given that pursuant to the Paperwork Reduction Act of 1995 (44 U.S.C. 3501 *et seq.*), the Securities and Exchange Commission (''Commission'') has submitted to the Office of Management and Budget requests for extension of the previously approved collection of information discussed below.

Rule 17a–8—Financial Recordkeeping and Reporting of Currency and Foreign Transactions

Rule 17a–8 (17 CFR 240.17a–8) under the Securities Exchange Act of 1934 (15 U.S.C. 78a *et seq.*) (the ''Act'') requires brokers and dealers to make and keep certain reports and records concerning their currency and monetary instrument transactions. The requirements allow the Commission to ensure that brokers and dealers are in compliance with the Currency and Foreign Transactions Reporting Act of 1970 (''Bank Secrecy Act'') and with the Department of the Treasury regulations under that Act.

The reports and records required under this rule initially are required under Department of the Treasury regulations, and additional burden hours and costs are not imposed by this rule.

An agency may not conduct or sponsor, and a person is not required to respond to, a collection of information unless it displays a currently valid control number.

Comments should be directed to (1) Desk Officer for the Securities and Exchange Commission, Office of Information and Regulatory Affairs, Office of Management and Budget, Room 10102, New Executive Office Building, Washington, DC, 20503 or by sending an e-mail to: *David_Rostker@omb.eop.gov;* and (2) R. Corey Booth, Director/Chief Information Officer, Securities and Exchange Commission, C/O Shirley Martinson, 6432 General Green Way, Alexandria, Virginia 22312 or send an e-mail to: *PRA_Mailbox@sec.gov.* Comments must be submitted to OMB within 30 days of this notice.

Dated: June 29, 2006.

J. Lynn Taylor,

Assistant Secretary.

[FR Doc. E6–11499 Filed 7–19–06; 8:45 am]

BILLING CODE 8010–01–P

SECURITIES AND EXCHANGE COMMISSION

[Release No. 34–54137; File No. SR–Amex–2006–67]

Self-Regulatory Organizations; American Stock Exchange LLC; Notice of Filing and Immediate Effectiveness of Proposed Rule Change To Permit the Listing and Trading of Quarterly Options Series

July 12, 2006.

Pursuant to Section 19(b)(1) of the Securities Exchange Act of 1934 (''Act'') [1] and Rule 19b–4 thereunder,[2] notice is hereby given that on July 11, 2006, the American Stock Exchange LLC (''Exchange'' or ''Amex'') filed with the Securities and Exchange Commission (''Commission'') the proposed rule change as described in Items I and II below, which Items have been substantially prepared by the Exchange. The Exchange has designated this proposal as non-controversial under Section 19(b)(3)(A)(iii) of the Act [3] and Rule 19b–4(f)(6) thereunder,[4] which renders the proposed rule change effective upon filing with the Commission. The Commission is publishing this notice to solicit comments on the proposed rule change from interested persons.

[1] 15 U.S.C. 78s(b)(1).

[2] 17 CFR 240.19b–4.

[3] 15 U.S.C. 78s(b)(3)(A)(iii).

[4] 17 CFR 240.19b–4(f)(6).

I. Self-Regulatory Organization's Statement of the Terms of Substance of the Proposed Rule Change

The Exchange proposes to amend its rules to permit the listing and trading of quarterly options series.[5] The text of the proposed rule change is set forth below. Proposed new language is in *italics;* language proposed to be deleted is in [brackets].

* * * * *

Rule 900—Applicability, Definitions and References

(a) No change.

(b) Definitions—The following terms as used in the Rules in this Chapter shall, unless the context otherwise indicates, have the meanings herein specified:

(1)–(44) No change.

(45) Quarterly Options Series—The term ''Quarterly Options Series'' means a series in an options class that is approved for listing and trading on the Exchange in which the series is opened for trading on any business day and that expires at the close of business on the last business day of a calendar quarter:

(c)–(d) No change.

* * * Commentary

.01 No change.

* * * * *

Rule 903—Series of Options Open for Trading

(a) After a particular class of options (call option contracts or put option contracts relating to a specific underlying security or calculated index) has been approved for listing and trading on the Exchange, the Exchange shall from time to time open for trading series of options therein. Prior to the opening of trading in any series of options, the Exchange shall fix the expiration month, expiration year (if the options series has more than one year remaining to expiration), and exercise price of option contracts included in each such series. For Short Term Options Series, the Exchange will fix a specific expiration date and exercise price, as provided in paragraph (h). *For Quarterly Options Series, the Exchange will fix a specific expiration date and exercise price, as provided in Commentary .09.*

(b)–(h) No change.

[5] This proposal is substantially identical to a recently approved proposal by the International Securities Exchange (''ISE'') to list Quarterly Options Series on a pilot basis. *See* Securities Exchange Act Releases No. 53857 (May 24, 2006), 71 FR 31246 (June 1, 2006) (notice of filing); and 54113 (July 7, 2006) (approval order).

* * * Commentary

.01–.08 No change.

.09 Quarterly Options Series Pilot Program: For a pilot period, the Exchange may list and trade options series that expire at the close of business on the last business day of a calendar quarter (''Quarterly Options Series''). The Exchange may list Quarterly Options Series for up to five (5) currently listed options classes that are either Stock Index Options or options on exchange traded funds. In addition, the Exchange may also list Quarterly Options Series on any options classes that are selected by other securities exchanges that employ a similar pilot program under their respective rules. The pilot will commence the day the Exchange first initiates trading in a Quarterly Options Series, which shall be no later than August 10, 2006 and will expire on July 10, 2007.

(a) The Exchange will list series that expire at the end of the next consecutive four (4) calendar quarters, as well as the fourth quarter of the next calendar year. For example, if the Exchange is trading Quarterly Options Series in the month of May 2006, it will list series that expire at the end of the second, third and fourth quarters of 2006, as well as the first and fourth quarters of 2007. Following the second quarter 2006 expiration, the Exchange will add series that expire at the end of the second quarter of 2007.

(b) The Exchange will not list a Short Term Options Series on an options class whose expiration coincides with that of a Quarterly Options Series on that same options class.

(c) The strike price of each Quarterly Options Series will be fixed at a price per share, with at least two strike prices above and two strike prices below the value of the underlying security at about the time that a Quarterly Options Series is opened for trading on the Exchange. The Exchange shall list strike prices for a Quarterly Options Series that are within $5 from the closing price of the underlying on the preceding day. Additional Quarterly Options Series of the same class may be opened for trading on the Exchange when the Exchange deems it necessary to maintain an orderly market, to meet customer demand or when the market price of the underlying security moves substantially from the initial exercise price or prices. To the extent that any additional strike prices are listed by the Exchange, such additional strike prices shall be within $5 from the closing price of the underlying on the preceding day. The opening of new Quarterly Options Series shall not affect the series of options of the same class previously opened.

(d) The interval between strike prices on Quarterly Options Series shall be the same as the interval for strike prices for series in that same options class that expire in accordance with the normal monthly expiration cycle.

* * * * *

Rule 900C—Applicability and Definitions

(a) No change.

(b) Definitions—The following terms as used in the Rules in this Section shall, unless the context otherwise indicates, have the meanings herein specified:

(1)–(25) No change.

(26) Quarterly [Index Expiration] Option*s Series*—The term ''quarterly [index expiration] option*s series*'' means [an option contract on a stock index group that expires on the first business day of the month following the end of a calendar quarter]*, for the purposes of this Section 14, a series in an index options class that is approved for listing and trading on the Exchange in which the series is opened for trading on any business day and that expires at the close of business on the last business day of a calendar quarter.*

(27) No change.

* * * * *

Rule 903C—Series of Stock Index Options

(a) No change.

(i)–(iii) No change.

(iv) [Quarterly Index Expiration Option Series—The Exchange may list options on the Major Market (''XMI''), Institutional (''XII'') and S&P MidCap 400 (''MID'') stock indices that expire on the first business day of the month following the end of a calendar quarter. For such options, the Exchange may list up to eight consecutive quarterly expirations with an index multiplier no greater than 500. All other contract terms for such options will conform to the terms of the XMI, XII and MID options listed pursuant to the provisions of Rule 903C(a)(i) and (ii) above.] *Quarterly Options Series Pilot Program: For a pilot period, the Exchange may list and trade options series that expire at the close of business on the last business day of a calendar quarter (''Quarterly Options Series''). The Exchange may list Quarterly Options Series for up to five (5) currently listed options classes that are either Stock Index Options or options on exchange traded funds. In addition, the Exchange may also list Quarterly Options Series on any options classes that are selected by other securities exchanges that employ a similar pilot program under their respective rules. The pilot will commence the day the Exchange first initiates trading in a Quarterly Options Series, which shall be no later than August 10, 2006 and will expire on July 10, 2007.*

1. The Exchange will list series that expire at the end of the next consecutive four (4) calendar quarters, as well as the fourth quarter of the next calendar year. For example if the Exchange is trading Quarterly Options Series in the month of May 2006, it will list series that expire at the end of the second, third and fourth quarters of 2006, as well as the first and fourth quarters of 2007. Following the second quarter 2006 expiration, the Exchange will add series that expire at the end of the second quarter of 2007.

2. The Exchange will not list a Short Term Option Series on an options class whose expiration coincides with that of a Quarterly Options Series on that same options class.

3. Quarterly Options Series shall be P.M. settled.

4. The strike price of each Quarterly Options Series will be fixed at a price per share, with at least two strike prices above and two strike prices below the value of the underlying security at about the time that a Quarterly Options Series is opened for trading on the Exchange. The Exchange shall list strike prices for a Quarterly Options Series that are within $5 from the closing price of the underlying on the preceding day. The Exchange may open for trading additional Quarterly Options Series of the same class if the current index value of the underlying index moves substantially from the exercise price of those Quarterly Options Series that already have been opened for trading on the Exchange. The exercise price of each Quarterly Options Series opened for trading on the Exchange shall be reasonably related to the current index value of the underlying index to which such series relates at or about the time such series of options is first opened for trading on the Exchange. The term ''reasonably related to the current index value of the underlying index'' means that the exercise price is within thirty percent (30%) of the current index value. The Exchange may also open for trading additional Quarterly Options Series that are more than thirty percent (30%) away from the current index value, provided that demonstrated customer interest exists for such series, as expressed by institutional, corporate, or individual customers or their brokers. Market-makers trading for their own account shall not be considered when

determining customer interest under this provision.

5. The interval between strike prices on Quarterly Options Series shall be the same as the interval for strike prices for series in that same options class that expire in accordance with the normal monthly expiration cycle.

(v) No change.

(b)–(c) No change.

* * * Commentary

.01–.04 No change.

Rule 904C—Position Limits

(a) No change.

(b) Broad Stock Index Groups. No change.

—Full Size Nasdaq 100 Index Options (NDX) through Eurotop 100 Index Options—No change.

—Positions in Short Term Option Series *and Quarterly Options Series* shall be aggregated with positions in options contracts on the same index.

—Russell 1000 Index Options, etc.—No change.

(c) Stock Index Industry Groups.

(i) Subject to the procedures specified in sub-paragraph (iii) of this paragraph (c), the Exchange shall establish a position limit with respect to options on the Pauzeé Tombstone Common Stock Index of 6,000 contracts and for each underlying stock index industry group at a level no greater than:

—18,000 contracts if the Exchange determines, at the time of a review conducted pursuant to subparagraph (ii) of this paragraph (c), that any single stock in the group accounted, on average, for 30% or more of the numerical index value during the 30-day period immediately preceding the review; or

—24,000 contracts if the Exchange determines, at the time of a review conducted pursuant to subparagraph (ii) of this paragraph (c), that any single stock in the group accounted, on average, for 20% or more of the numerical index value or that any five stocks in the group together accounted, on average, for more than 50% of the numerical index value, but that no single stock in the group accounted, on average, for 30% or more of the numerical index value, during the 30-day period immediately preceding the review; or

—31,500 contracts if the Exchange determines that the conditions specified above which would require the establishment of a lower limit have not occurred.

—Positions in Short Terms Option Series *and Quarterly Options Series* shall be aggregated with positions in options contracts on the same index.

(ii)–(iii) No change.

(d) No change.

* * * * *

II. Self-Regulatory Organization's Statement of the Purpose of, and Statutory Basis for, the Proposed Rule Change

In its filing with the Commission, the Exchange included statements concerning the purpose of, and basis for, the proposed rule change and discussed any comments it received on the proposed rule change. The text of these statements may be examined at the places specified in Item IV below. The Exchange has prepared summaries, set forth in sections A, B, and C below, of the most significant aspects of such statements.

A. Self-Regulatory Organization's Statement of the Purpose of, and Statutory Basis for, the Proposed Rule Change

1. Purpose

The Exchange proposes to amend its rules to accommodate the listing of options series that would expire at the close of business on the last business day of a calendar quarter (''Quarterly Options Series'').[6] Quarterly Options Series could be opened on any approved options class[7] on a business day (''Quarterly Options Opening Date'') and would expire at the close of business on the last business day of a calendar quarter (''Quarterly Options Expiration Date''). The Exchange would list series that expire at the end of the next four consecutive calendar quarters, as well as the fourth quarter of the next calendar year. For example, if the Exchange were trading Quarterly Options Series in the month of May 2006, it would list series that expire at the end of the second, third, and fourth quarters of 2006, as well as the first and fourth quarters of 2007. Following the second quarter 2006 expiration, the Exchange would add series that expire at the end of the second quarter of 2007.

Quarterly Options Series listed on currently approved options classes would be P.M.-settled and, in all other respects, would settle in the same manner as do the monthly expiration series in the same options class.

The proposed rule change would allow the Exchange to open up to five currently listed options classes that are either index options or options on ETFs. The strike price for each series would be fixed at a price per share, with at least two strike prices above and two strike prices below the approximate value of the underlying security at about the time that a Quarterly Options Series is opened for trading on the Exchange. The Exchange may list strike prices for a Quarterly Options Series that are within $5 from the closing price of the underlying security on the preceding trading day. The proposal would permit the Exchange to open for trading additional Quarterly Options Series of the same class when the Exchange deems it necessary to maintain an orderly market, to meet customer demand, or when the current market price of the underlying security moves substantially from the exercise prices of those Quarterly Options Series that already have been opened for trading on the Exchange. In addition, the exercise price of each Quarterly Options Series on an underlying index would be required to be reasonably related to the current index value of the index at or about the time such series of options were first opened for trading on the Exchange. The term ''reasonably related to the current index value of the underlying index'' means that the exercise price is within thirty percent of the current index value. The Exchange would also be permitted to open for trading additional Quarterly Options Series on an underlying index that are more than thirty percent away from the current index value, provided that demonstrated customer interest exists for such series, as expressed by institutional, corporate, or individual customers or their brokers. Market-Makers trading for their own account shall not be considered when determining customer interest under this provision.

Because monthly options series expire on the third Friday of their expiration month, a Quarterly Options Series, which would expire on the last business day of the quarter, could never expire in the same week in which a monthly options series in the same class expires. The same, however, is not the case for Short Term Option Series. Quarterly Options Series and Short Term Option Series on the same options class could potentially expire concurrently under

[6] In 1993, the Exchange was granted SEC approval to list and trade broad-based index options that expire at the end of each quarter. *See* Securities Exchange Act Release No. 31844 (February 9, 1993); 58 FR 8796 (February 17, 1993). The Exchange listed and traded these options on the Major Market Index (XMI), Institutional Index (XII) and S&P Midcap Index (MID). These quarterly-style options proved to be of limited use to investors and did not trade particularly well, largely because they were A.M.-settled options.

[7] Quarterly Options Series may be opened in options on indexes or options on Exchange Traded Fund (''ETFs'') that satisfy the applicable listing criteria under Amex rules.

the proposal.[8] Therefore, to avoid any confusion in the marketplace, the proposal stipulates that the Exchange may not list a Short Term Option Series that expires at the end of the day on the same day as a Quarterly Options Series in the same class expires. In other words, the proposed rules would not permit the Exchange to list a P.M.-settled Short Term Option Series on an ETF or an index that would expire on a Friday that is the last business day of a calendar quarter if a Quarterly Options Series on that ETF or index were scheduled to expire on that day.

However, the proposed rules would permit the Exchange to list as A.M.-settled Short Term Option Series and a P.M.-settled Quarterly Options Series in the same options class that both expire on the same day (*i.e.*, on a Friday that is the last business day of the calendar quarter). The Exchange believes that the concurrent listing of an A.M.-settled Short Term Option Series and a P.M.-settled Quarterly Options Series on the same underlying ETF or index that expire on the same day would not tend to cause the same confusion as would P.M.-settled short term and quarterly series in the same options class, and would provide investors with an additional hedging mechanism.

Finally, the interval between strike prices on Quarterly Options Series would be the same as the interval for strike prices for series in the same options class that expires in accordance with the normal monthly expiration cycles.

The Exchange believes that Quarterly Options Series would provide investors with a flexible and valuable tool to manage risk exposure, minimize capital outlays, and be more responsive to the timing of events affecting the securities that underlie option contracts. At the same time, the Exchange is cognizant of the need to be cautious in introducing a product that can increase the number of outstanding strike prices. For that reason, the Exchange intends to employ a limited pilot program (''Pilot Program'') for Quarterly Options Series. Under the terms of the Pilot Program, the Exchange could select up to five option classes on which Quarterly Options Series may be opened on any Quarterly Options Opening Date. The Exchange would also be allowed to list those Quarterly Options Series on any options class that is selected by another securities exchange with a similar Pilot Program under its rules. The Exchange believes that limiting the number of options classes in which Quarterly Options Series may be opened would help to ensure that the addition of the new series through this Pilot Program will have only a negligible impact on the Exchange's and the Option Price Reporting Authority's (''OPRA'') quoting capacity. Also, limiting the term of the Pilot Program to a period of approximately one year will allow the Exchange and the Commission to determine whether the program should be extended, expanded, and/or made permanent.

If the Exchange were to propose an extension or an expansion of the program, or were the Exchange to propose to make the Pilot Program permanent, the Exchange would submit, along with any filing proposing such amendments to the Pilot Program, a Pilot Program report (''Report'') that will provide an analysis of the Pilot Program covering the entire period during which the Pilot Program was in effect. The Report would include, at a minimum: (1) Data and written analysis on the open interest and trading volume in the classes for which Quarterly Option Series were opened; (2) an assessment of the appropriateness of the options classes selected for the Pilot Program; (3) an assessment of the impact of the Pilot Program on the capacity of the Amex, OPRA, and on market data vendors (to the extent data from market data vendors is available); (4) any capacity problems or other problems that arose during the operation of the Pilot Program and how the Amex addressed such problems; (5) any complaints that the Amex received during the operation of the Pilot Program and how the Amex addressed them; and (6) any additional information that would assist in assessing the operation of the Pilot Program. The Report must be submitted to the Commission at least sixty days prior to the expiration date of the Pilot Program.

Alternatively, at the end of the Pilot Program, if the Exchange determines not to propose an extension or an expansion of the Pilot Program, or if the Commission determines not to extend or expand the Pilot Program, the Exchange would no longer list any additional Quarterly Options Series and would limit all existing open interest in Quarterly Options Series to closing transactions only.

Finally, the Exchange represents that it has the necessary systems capacity to support new options series that will result from the introduction of Quarterly Options Series.

2. Statutory Basis

The Exchange believes that the introduction of Quarterly Options Series will satisfy institutional demand for such options and provide additional flexibility and additional risk management tools to investors. For these reasons, the Exchange believes that the proposed rule change is consistent with Section 6(b) of the Act[9] in general and furthers the objectives of Section 6(b)(5) of the Act[10] in particular in that it is designed to promote just and equitable principles of trade, to prevent fraudulent and manipulative acts and practices, and, in general, to protect investors and the public interest.

B. Self-Regulatory Organization's Statement on Burden on Competition

The Exchange does not believe that the proposed rule change will impose any burden on competition that is not necessary or appropriate in furtherance of the purposes of the Act.

C. Self-Regulatory Organization's Statement on Comments on the Proposed Rule Change Received From Members, Participants or Others

No written comments were solicited or received with respect to the proposed rule change.

III. Date of Effectiveness of the Proposed Rule Change and Timing for Commission Action

The Exchange has filed the proposed rule change pursuant to Section 19(b)(3)(A) of the Act[11] and subparagraph (f)(6) of Rule 19b–4 thereunder.[12] Because the foregoing proposed rule change (i) Does not significantly affect the protection of investors or the public interest; (ii) does not impose any significant burden on competition; and (iii) does not become operative for 30 days from the date on which it was filed, or such shorter time as the Commission may designate, if consistent with the protection of investors and the public interest, the proposed rule change has become effective pursuant to Section 19(b)(3)(A) of the Act and Rule 19b–4(f)(6)(iii) thereunder.[13]

A proposed rule change filed under Rule 19b–4(f)(6) normally does not become operative for 30 days after the

[8] The Exchange currently does not have any Short Term Option Series listed for trading.

[9] 15 U.S.C. 78f(b).

[10] 15 U.S.C. 78f(b)(5).

[11] 15 U.S.C. 78s(b)(3)(A).

[12] 17 CFR 240.19b–4(f)(6).

[13] Rule 19b–4(f)(6)(iii) requires the Exchange to give written notice to the Commission of its intent to file the proposed rule change five business days prior to filing. The Commission has determined to waive the five-day pre-filing requirement for this proposal.

date of filing. However, Rule 19b–4(f)(6)(iii) permits the Commission to waive the operative delay if such action is consistent with the protection of investors and the public interest. The Exchange has asked the Commission to waive the operative delay to permit the Pilot Program extension to become effective prior to the 30th day after filing.

The Commission believes that waiving the 30-day operative delay is consistent with the protection of investors and the public interest. The Commission notes that the proposal is substantially identical to the ISE's Quarterly Option Series Pilot Program, previously published for comment and approved by the Commission,[14] and thus the Exchange's proposal raises no new issues of regulatory concern. Moreover, waiving the operative delay will allow the Exchange to immediately compete with other exchanges that list and trade quarterly options under similar programs, and consequently will benefit the public. Therefore, the Commission has determined to waive the 30-day delay and allow the proposed rule change to become operative immediately.[15]

At any time within 60 days of the filing of the proposed rule change, the Commission may summarily abrogate such rule change if it appears to the Commission that such action is necessary or appropriate in the public interest, for the protection of investors, or otherwise in furtherance of the purposes of the Act.

IV. Solicitation of Comments

Interested persons are invited to submit written data, views, and arguments concerning the foregoing, including whether the proposed rule change is consistent with the Act. Comments may be submitted by any of the following methods:

Electronic Comments

- Use the Commission's Internet comment form (*http://www.sec.gov/rules/sro.shtml*); or
- Send an e-mail to *rule-comments@sec.gov.* Please include File No. SR–Amex–2006–67 on the subject line.

Paper Comments

- Send paper comments in triplicate to Nancy M. Morris, Secretary, Securities and Exchange Commission, 100 F Street, NE., Washington, DC 20549–1090.

All submissions should refer to File Number SR–Amex–2006–67. This file number should be included on the subject line if e-mail is used. To help the Commission process and review your comments more efficiently, please use only one method. The Commission will post all comments on the Commissions Internet Web site (*http://www.sec.gov/rules/sro.shtml*). Copies of the submission, all subsequent amendments, all written statements with respect to the proposed rule change that are filed with the Commission, and all written communications relating to the proposed rule change between the Commission and any person, other than those that may be withheld from the public in accordance with the provisions of 5 U.S.C. 552, will be available for inspection and copying in the Commission's Public Reference Room. Copies of such filing also will be available for inspection and copying at the principal office of the Exchange. All comments received will be posted without change; the Commission does not edit personal identifying information from submissions. You should submit only information that you wish to make available publicly. All submissions should refer to File Number SR–Amex–2006–67 and should be submitted on or before August 10, 2006.

For the Commission, by the Division of Market Regulation, pursuant to delegated authority.[16]

J. Lynn Taylor,

Assistant Secretary.

[FR Doc. E6–11489 Filed 7–19–06; 8:45 am]

BILLING CODE 8010–01–P

[14] *See supra* note 5.

[15] For purposes only of waiving the operative delay of this proposal, the Commission notes that it has considered the proposed rule's impact on efficiency, competition, and capital formation. 15 U.S.C. 78c(f).

[16] 17 CFR 200.30–3(a)(12).

SECURITIES AND EXCHANGE COMMISSION

[Release No. 34–54135; File No. SR–CBOE–2005–65]

Self-Regulatory Organizations; Chicago Board Options Exchange, Incorporated; Order Approving Proposed Rule Change and Amendment Nos. 1 and 2 Relating to the Processing of Complex Orders in the Hybrid Trading System

July 12, 2006.

I. Introduction

On August 24, 2005, the Chicago Board Options Exchange, Incorporated (''CBOE'' or ''Exchange'') filed with the Securities and Exchange Commission (''Commission''), pursuant to Section 19(b)(1) of the Securities Exchange Act of 1934 (''Act'')[1] and Rule 19b–4 thereunder,[2] a proposed rule change to, among other things, establish an automated Request for Responses (''RFR'') auction process for eligible complex orders (a ''COA'' process) traded on the CBOE's Hybrid Trading System (''Hybrid System'') and to revise certain CBOE rules governing complex orders. The proposed rule change, as amended by Amendment Nos. 1 and 2, was published for comment in the **Federal Register** on June 7, 2006.[3] The Commission received no comments regarding the proposal, as amended. This order approves the proposal, as amended.

II. Description of the Proposal

A. COA Process for Complex Orders

CBOE Rule 6.53C, ''Complex Orders on the Hybrid System,'' sets forth the procedures for trading complex orders on the CBOE's Hybrid System. Among other things, CBOE Rule 6.53C addresses whether a complex order will be routed to a PAR workstation, for manual handling, or to the complex order book (''COB''), for automated handling, and, once in the COB, the manner in which a complex order will execute against orders or quotes in the EBook, orders resting in the COB, and orders submitted to trade against interest in the COB. The CBOE proposes to introduce the COA,[4] a new functionality designed to give eligible complex orders an opportunity for price improvement before being booked in the COB or once on PAR. The CBOE believes that the COA process will facilitate more automated handling of complex orders.

Under the COA process, when a COA is initiated for a COA-eligible order,[5] the CBOE will send an RFR message to all members who have elected to receive RFR messages.[6] Market Makers with an appointment in the relevant options class and members acting as agent for orders resting at the top of the COB in the relevant options series may submit

[1] 15 U.S.C. 78s(b)(1).

[2] 17 CFR 240.19b–4.

[3] *See* Securities Exchange Act Release No. 53909 (May 31, 2006), 71 FR 33011 (''Notice'').

[4] *See* CBOE Rule 6.53C(d).

[5] The appropriate CBOE committee will determine, on a class-by-class basis, the complex orders that are eligible for a COA based on the order's marketability (defined as a number of ticks away from the current market), size, and complex order type. *See* CBOE Rule 6.53C(d)(i)(2).

[6] The RFR message will identify the component series, the size of the COA-eligible order and any contingencies, if applicable, but will not identify the side of the market. *See* CBOE Rule 6.53C(d)(ii).

responses to the RFR message (''RFR Responses'') during the Response Time Interval.[7] RFR Responses, which will not be displayed to the market, may be expressed on a net price basis in a multiple of the minimum increment or in one-cent increments, as determined by the appropriate CBOE committee on a class-by-class basis.[8] The legs of a COA-eligible order may be executed in one-cent increments, regardless of the minimum quoting increments that otherwise would apply to the individual legs of the order.[9]

At the conclusion of the Response Time Interval, a COA-eligible order will trade first based on the best net price(s) available.[10] At the same net price, the COA-eligible order will trade, first, against individual orders and quotes in the EBook, provided the COA-eligible order can be executed in full or in a permissible ratio by orders and quotes in the EBook; second, against public customer complex orders resting in the COB before, or that are received during, the Response Time Interval, and public customer RFR Responses; third, against non-public customer orders resting in the COB before the Response Time Interval; and fourth, against non-public customer orders resting in the COB that are received during the Response Time Interval and non-public customer RFR Responses.[11] A COA-eligible order that cannot be filled in whole or in a permissible ratio will route to the COB or back to PAR, as applicable.[12]

The COA provisions also address the handling of unrelated complex orders that the CBOE receives prior to the expiration of the Response Time Interval.[13] A pattern or practice of submitting orders that cause a COA to conclude early will be deemed conduct inconsistent with just and equitable principles of trade and a violation of CBOE Rule 4.1, ''Just and Equitable Principles of Trade.''[14] Similarly, the dissemination of information regarding COA-eligible orders to third parties will be deemed conduct inconsistent with just and equitable principles of trade and a violation of CBOE Rule 4.1 and other CBOE Rules.[15]

The CBOE states that the COA process may not be used to trade a COA-eligible order against a facilitated or solicited order.[16] In this regard, the CBOE notes that facilitations and solicitations of complex orders, including COA-eligible orders, will continue to be subject to the limitations on facilitations and solicitations provided in Interpretations and Policies .01 and .02 to CBOE Rule 6.45A, ''Priority and Allocation of Equity Option Trades on the CBOE Hybrid System,'' and in Interpretations and Policies .01 and .02 to CBOE Rule 6.45B, ''Priority and Allocation of Trades in Index Options and Options on ETFs on the CBOE Hybrid System.''[17]

B. Revisions to the COB

The CBOE also proposes to revise its rules governing the COB[18] to: (1) Allow the appropriate CBOE committee to determine, on a class-by-class basis, whether complex orders routed to or resting in the COB may be expressed on a net price basis in multiples of the minimum increment or in one-cent increments; (2) provide that the legs of a complex order may be executed in one-cent increments, regardless of the minimum quoting increments otherwise applicable to the individual legs of the order; (3) provide that a complex order in the COB may execute against quotes, as well as orders, in the EBook, and that market participants, as defined in CBOE Rule 6.45A or 6.45B, as applicable, may submit quotes, as well as orders, to trade against orders in the COB; (4) provide that the allocation of complex orders within the COB will be pursuant to the rules of trading priority otherwise applicable to incoming orders in the individual component legs; and (5) provide that the allocation of complex orders among market participants will be made pursuant to CBOE Rule 6.45A(c) or 6.45B(c), as applicable.

C. Changes to the Minimum Trading Increment for Complex Orders

CBOE Rule 6.42(3) currently provides that bids and offers in spread, straddle, and combination orders, as defined in CBOE Rule 6.53, may be expressed in any increment, regardless of the minimum increments otherwise appropriate to the individual legs of the order. The proposal revises CBOE Rule 6.42(3) to include the other complex orders defined in CBOE Rule 6.53C in addition to the complex orders currently enumerated CBOE Rule 6.42(3).[19]

CBOE Rule 6.42(3) also provides that bids and offers for spread, straddle, or combination orders in S&P 500 Index options, other than box spreads, must be expressed in decimal increments no smaller than $.05. The CBOE proposes to apply this provision to S&P 100 Index options. The CBOE believes that this change is appropriate in light of the complexity of complex orders and the size of the underlying S&P 100 Index.

In addition, the proposal revises CBOE Rule 6.42(3) to state that the legs of complex orders may be executed in one-cent increments. CBOE Rule 6.42(3) will continue to require complex orders to be expressed in net price increments that are multiples of the minimum increment to be entitled to priority under CBOE Rule 6.45, ''Priority of Bids and Offers—Allocation of Trades.''

D. Additional Changes

The CBOE proposes to revise CBOE Rules 6.45; 6.45A; 6.45B; Interpretation and Policy .03 to CBOE Rule 6.74, ''Crossing Orders;'' and CBOE Rule 6.9, ''Solicited Transactions,'' to include the complex orders defined in CBOE Rule 6.53C in addition to the complex orders currently specified in the rules.

III. Discussion

After careful review, the Commission finds that the proposed rule change is

[7] The Response Time Interval is the period of time during which responses to the RFR may be entered. The appropriate CBOE committee will determine the Response Time Interval, which will not exceed three seconds, on a class-by-class basis. *See* CBOE Rule 6.53C(d)(iii)(2).

[8] *See* CBOE Rule 6.53C(d)(iii)(1).

[9] *See* CBOE Rule 6.53C(d)(v).

[10] *See* CBOE Rule 6.53C(d)(v).

[11] *See* CBOE Rule 6.53C(d)(v)(1)–(4).

[12] *See* CBOE Rule 6.53C(d)(vi).

[13] An incoming COA-eligible order on the opposite side of the market that is marketable against the starting price of the original COA-eligible order will end the original COA; an incoming COA-eligible order on the same side of the market, at the same price or worse than the original COA-eligible order and better than or equal to the starting price, will join the original COA; and an incoming COA-eligible order on the same side of the market at a better price than the original COA-eligible order will join the original COA, cause the original COA to end, and cause a new COA to begin for any remaining balance on the incoming COA-eligible order. *See* CBOE Rule 6.53C(d)(viii). CBOE Rule 6.53C(d)(viii) also describes the processing of orders when an unrelated complex order arrives prior to the expiration of the Response Time Interval.

[14] *See* CBOE Rule 6.53C, Interpretation and Policy .04.

[15] *See* CBOE Rule 6.53C, Interpretation and Policy .05.

[16] *See* Notice *supra* note 3, at 33015 n.12.

[17] Regarding principal transactions, Interpretation and Policy .01 of CBOE Rules 6.45A and 6.45B prohibit an order entry firm from executing as principal against an order it represents as agent unless: (1) The agency order is first exposed on the Hybrid System for at least three seconds; (2) the order entry firm has been bidding or offering for at least three seconds prior to receiving an agency order that is executable against such bid or offer; or (3) the order entry firm proceeds in accordance with the crossing rules in CBOE Rule 6.74. Regarding solicitation orders, Interpretation and Policy .02 of CBOE Rules 6.45A and 6.45B require an order entry firm to expose for at least three seconds an order it represents as agent before the order may be executed electronically via the electronic execution mechanism of the Hybrid System, in whole or in part, against orders solicited from members and non-member broker-dealers to transact with the order.

[18] *See* CBOE Rule 6.53C(c).

[19] The complex orders defined in CBOE Rule 6.53C(a) are: Spread order; straddle order; strangle order; combination order as defined in CBOE Rule 6.53(e); ratio order; butterfly spread order; box/roll spread order; collar orders and risk reversals; and conversions and reversals.

consistent with the requirements of the Act and the rules and regulations thereunder applicable to a national securities exchange and, in particular, with Section 6(b)(5) of the Act,[20] which requires, among other things, that the rules of a national securities exchange be designed to prevent fraudulent and manipulative acts and practices, to promote just and equitable principles of trade, to remove impediments to, and perfect the mechanism of, a free and open market and a national market system and, in general, to protect investors and the public interest.[21]

The new COA functionality will provide an electronic auction for eligible complex orders. Under the COA auction process, Market Makers with an appointment in the relevant options class and members acting as agent for orders resting at the top of the COB in the relevant options series will be able to submit RFR Responses. At the conclusion of the COA auction, the auctioned order will execute against the interest available in the EBook, the COB, and/or RFR Responses submitted during the COA.[22] By providing an electronic auction for eligible complex orders, the Commission believes that the COA process could facilitate the execution of eligible complex orders and provide them with an opportunity for price improvement.

The Commission notes that the CBOE's rules provide that a pattern or practice of submitting orders that cause a COA to conclude early will be deemed conduct inconsistent with just and equitable principles of trade and a violation of CBOE Rule 4.1,[23] and that the dissemination of information regarding COA-eligible orders to third parties will be deemed conduct inconsistent with just and equitable principles of trade and a violation of CBOE Rule 4.1 and other CBOE rules.[24] These provisions will require the CBOE to surveil for, and should help to deter, potential abuses of the COA process.

In addition, the Commission notes that the COA system cannot be used to trade a COA-eligible order against a facilitated or solicited order. COA-eligible orders, like other orders on the Hybrid System, will be subject to CBOE Rule 6.45A, Interpretation and Policies .01 and .02, and CBOE Rule 6.45B, Interpretation and Policies .01 and .02. Accordingly, a CBOE member seeking to trade with its customer's COA-eligible order would be required to comply with Interpretation and Policy .01 of CBOE Rule 6.45A or 6.45B, as applicable, and a CBOE member seeking to cross its customer's COA-eligible order with a solicited order would be required to comply with Interpretation and Policy .02 of CBOE Rule 6.45A or 6.45B, as applicable.

The Commission believes that the changes to the COB should facilitate the execution of complex orders. In this regard, the proposal revises CBOE Rule 6.53C(c) to provide that quotes in the EBook, as well as orders in the EBook, may execute against a complex order in the COB, and that market participants, as defined in CBOE Rule 6.45A or 6.45B, as applicable, may submit quotes, as well as orders, to trade against orders in the COB. In addition, the proposal revises CBOE Rule 6.53C(c) to allow complex orders routed to or resting in the COB to be expressed and executed in one-cent increments, thereby providing additional price points at which complex orders could be executed.[25] The proposal also clarifies the operation of the COB by providing that complex orders in the COB will be allocated pursuant to the rules of trading priority otherwise applicable to incoming electronic orders in the individual component legs,[26] and that complex orders will be allocated among market participants pursuant to CBOE Rule 6.45A or 6.45B, as applicable.[27]

The CBOE proposes to revise CBOE Rule 6.42(3) to allow the legs of a complex order to be executed in one-cent increments, which, according to the CBOE, will allow members to execute complex order transactions more easily. Accordingly, the Commission believes that this change could facilitate the execution of complex orders. The Commission notes that CBOE Rule 6.42(3) will continue to require complex orders to be expressed in multiples of the minimum increment to be entitled to priority under CBOE Rule 6.45.

CBOE Rule 6.42(3) currently requires bids and offers in complex orders in S&P 500 Index options, other than box spreads, to be expressed in increments no smaller than $0.05. The CBOE proposes to apply this provision to S&P 100 Index options. The Commission believes that this change is consistent with the Act because of the similarities between the S&P 500 Index and the S&P 100 Index.

Finally, the Commission believes that the proposal to revise CBOE Rules 6.45, 6.45A, 6.45B, 6.9, and 7.4 to include the complex orders defined in CBOE Rule 6.53C is consistent with the Act because it should provide consistent treatment for different types of complex orders under the CBOE's rules.

IV. Conclusion

It is therefore ordered, pursuant to Section 19(b)(2) of the Act,[28] that the proposed rule change (SR–CBOE–2005–65), as amended, is approved.

For the Commission, by the Division of Market Regulation, pursuant to delegated authority.[29]

J. Lynn Taylor,

Assistant Secretary.

[FR Doc. E6–11491 Filed 7–19–06; 8:45 am]

BILLING CODE 8010–01–P

[20] 15 U.S.C. 78f(b)(5).

[21] In approving this proposed rule change, the Commission has considered the proposed rule's impact on efficiency, competition, and capital formation. *See* 15 U.S.C. 78c(f).

[22] *See* notes 10–12, *supra*, and accompanying text. The Commission notes that, at the same price, public customer orders in the COB and public customer RFR Responses will trade against a COA-eligible order before non-public customer orders in the COB and non-public customer RFR Responses. *See* CBOE Rule 6.53C(d)(v)(2)–(4).

[23] *See* CBOE Rule 6.53C, Interpretation and Policy .04.

[24] *See* CBOE Rule 6.53C, Interpretation and Policy .05.

[25] The appropriate CBOE committee will determine, on a class-by-class basis, whether complex orders routed to or resting in the COB may be expressed in a multiple of the minimum increment or in one-cent increments. *See* CBOE Rule 6.53C(c)(ii).

[26] *See* CBOE Rule 6.53C(c)(ii)(2).

[27] *See* CBOE Rule 6.53C(c)(ii)(3).

[28] 15 U.S.C. 78s(b)(2).

[29] 17 CFR 200.30–3(a)(12).

SECURITIES AND EXCHANGE COMMISSION

[Release No. 34–54141; File No. SR–MSRB–2006–05]

Self-Regulatory Organizations; Municipal Securities Rulemaking Board; Notice of Filing and Immediate Effectiveness of Proposed Rule Change Relating to Revisions to the Series 53 Examination Program

July 13, 2006.

Pursuant to Section 19(b)(1) of the Securities Exchange Act of 1934 (''Act''),[1] and Rule 19b–4 thereunder,[2] notice is hereby given that on June 27, 2006, the Municipal Securities Rulemaking Board (''MSRB'' or ''Board''), filed with the Securities and Exchange Commission (''Commission'' or ''SEC'') the proposed rule change as described in Items I, II and III below, which Items have been prepared by the MSRB. The MSRB has designated the proposed rule change as constituting a stated policy, practice, or interpretation with respect to the meaning, administration, or enforcement of an existing rule of the self-regulatory

[1] 15 U.S.C. 78s(b)(1).

[2] 17 CFR 240.19b–4.

organization pursuant to Section 19(b)(3)(A)(i) of the Act,[3] and Rule 19b–4(f)(1) thereunder,[4] which renders the proposal effective upon filing with the Commission. The Commission is publishing this notice to solicit comments on the proposed rule change from interested persons.

I. Self-Regulatory Organization's Statement of the Terms of Substance of the Proposed Rule Change

The MSRB is filing with the Commission revisions to the study outline and selection specifications for the Municipal Securities Principal Qualification Examination (Series 53) program.[5] The proposed revisions update the material to reflect changes to the rules and regulations covered in the examination, as well as modify the content of the examination program to track more closely the job responsibilities of a municipal securities principal. The MSRB is not proposing any textual changes to the rules of the MSRB.

The revised study outline is available on the MSRB's Web site (*http://www.msrb.org*), at the MSRB's principal office, and at the Commission's Public Reference Room. The MSRB has omitted the Series 53 selection specifications from this filing and has submitted the specifications under separate cover to the Commission with a request for confidential treatment pursuant to Rule 24b–2 under the Act.[6]

II. Self-Regulatory Organization's Statement of the Purpose of, and Statutory Basis for, the Proposed Rule Change

In its filing with the Commission, the MSRB included statements concerning the purpose of and basis for the proposed rule change and discussed any comments it received on the proposed rule change. The text of these statements may be examined at the places specified in Item IV below. The MSRB has prepared summaries, set forth in Sections A, B, and C below, of the most significant aspects of such statements.

A. Self-Regulatory Organization's Statement of the Purpose of, and Statutory Basis for, the Proposed Rule Change

1. Purpose

Section 15B(b)(2)(A) of the Act[7] authorizes the MSRB to prescribe standards of training, experience, competence, and such other qualifications as the Board finds necessary or appropriate in the public interest or for the protection of investors. The MSRB has developed examinations that are designed to establish that persons associated with brokers, dealers and municipal securities dealers that effect transactions in municipal securities have attained specified levels of competence and knowledge. The MSRB periodically reviews the content of the examinations to determine whether revisions are necessary or appropriate in view of changes pertaining to the subject matter covered by the examinations.

MSRB Rule G–3(b) states that a municipal securities principal has responsibility to oversee the municipal securities activities of a broker, dealer or municipal securities dealer. In this capacity, a municipal securities principal manages, directs or supervises one or more of the following activities associated with the conduct of municipal securities business: Underwriting; trading; buying or selling municipal securities to or from customers; rendering financial advisory or consultant services to issuers of municipal securities; communications to customers about any municipal securities activities; processing, clearing, and (in the case of securities firms) safekeeping of municipal securities; and training of principals and representatives. The only examination that qualifies a municipal securities principal is the Municipal Securities Principal Qualification Examination (Series 53).

A committee of industry members and MSRB staff recently completed a review of the job requirements for a municipal securities principal and the Series 53 examination program. As a result of this review, the MSRB is updating the content of the examination to cover certain rules or provisions of rules that were promulgated since the last revision of the outline. Areas added to the study outline include:

- Definition of municipal fund security.
- Qualification and numerical requirements for municipal fund securities limited principals.
- Records concerning compliance with Rule G–20, on gifts, gratuities and non-cash compensation.
- SEC requirements for retention of information on associated persons.
- New Rule G–38, on solicitation of municipal securities business.
- Requirements regarding municipal fund securities advertisements.
- Remarketing activities under Rule G–23, on activities of financial advisors.
- Definitions regarding the Real-Time Transaction Reporting System.
- Minimum denominations.
- Forwarding official communications.

The MSRB has deleted from the study outline rules or rule provisions that are obsolete or do not have direct impact on the daily work of a municipal securities principal. These deletions include:

- Rule G–35, on arbitration.
- Requirements regarding the retaking of qualification examinations and the waiver of qualification requirements.
- Old Rule G–38, on consultants.
- References to the scope and notice of Rule G–12(a).
- SEC requirements regarding lost and stolen securities.

Technical changes have been made to correct the citations for various rules that have been amended. In addition, as part of an ongoing effort to align the examination more closely to the supervisory duties of a municipal securities principal, the MSRB is modifying the content of the examination to track the functional workflow of a municipal securities principal.

As a result of the revisions noted above, the MSRB is modifying the number of questions on each section of the Series 53 study outline as follows: Part One—Federal Regulations, four questions; Part Two—General Supervision, 21 questions; Part Three—Sales Supervision, 29 questions; Part Four—Origination and Syndication, 22 questions; and Part Six—Operations, 16 questions. Coverage on Part Five—Trading remains unchanged with eight questions. The revised examination continues to cover areas of knowledge required for effective supervision of municipal securities activities.

The MSRB is proposing these changes to the entire content of the Series 53 examination, including the selection specifications and question bank. The number of questions on the Series 53 examination will remain at 100, and candidates will continue to be allowed three and one-half hours for each testing session. Also, each question will continue to count one point, and each candidate must correctly answer 70 percent of the questions in order to receive a passing grade.

[3] 15 U.S.C. 78s(b)(3)(A)(i).

[4] 17 CFR 240.19b–4(f)(1).

[5] The MSRB is also proposing corresponding revisions to the Series 53 question bank, but based upon instructions from the Commission staff, the MSRB is submitting SR–MSRB–2006–05 for immediate effectiveness pursuant to Seciton 19(b)(3)(A)(i) of the Act and Rule 19b–4(f)(1) thereunder, and is not filing the question bank for Commission review. *See* letter to Diane G. Klinke, General Counsel, MSRB, from Belinda Blaine, Associate Director, Division of Market Regulation, SEC, dated July 24, 2000. The question bank is available for Commission review.

[6] 17 CFR 240.24b–2.

[7] 15 U.S.C. 78o–4(b)(2)(A).

2. Statutory Basis

The MSRB believes that the proposed revisions to the Series 53 examination program are consistent with the provisions of Section 15B(b)(2)(A) of the Act,[8] which authorizes the MSRB to prescribe standards of training, experience, competence, and such other qualifications as the Board finds necessary or appropriate in the public interest or for the protection of investors. Section 15B(b)(2)(A) of the Act also provides that the Board may appropriately classify municipal securities brokers and municipal securities dealers and their associated personnel and require persons in any such class to pass tests prescribed by the Board.

B. Self-Regulatory Organization's Statement on Burden on Competition

The MSRB does not believe that the proposed rule change will impose any burden on competition that is not necessary or appropriate in furtherance of the purposes of the Act, as amended.

C. Self-Regulatory Organization's Statement on Comments on the Proposed Rule Change Received From Members, Participants or Others

Written comments were neither solicited nor received.

III. Date of Effectiveness of the Proposed Rule Change and Timing for Commission Action

The proposed rule change has become effective pursuant to Section 19(b)(3)(A)(i) of the Act[9] and Rule 19b–4(f)(1) thereunder,[10] in that the proposed rule change constitutes a stated policy, practice, or interpretation with respect to the meaning, administration, or enforcement of an existing rule of the self-regulatory organization. MSRB proposes to implement the revised Series 53 examination program on August 1, 2006. At any time within 60 days of the filing of the proposed rule change, the Commission may summarily abrogate such rule change if it appears to the Commission that such action is necessary or appropriate in the public interest, for the protection of investors, or otherwise in furtherance of the purposes of the Act.[11]

IV. Solicitation of Comments

Interested persons are invited to submit written data, views, and arguments concerning the foregoing, including whether the proposed rule change is consistent with the Act. Comments may be submitted by any of the following methods:

Electronic Comments

- Use the Commission's Internet comment form (*http://www.sec.gov/rules/sro.shtml*); or
- Send an e-mail to *rule-comments@sec.gov.* Please include File Number SR–MSRB–2006–05 on the subject line.

Paper Comments

- Send paper comments in triplicate to Nancy M. Morris, Secretary, Securities and Exchange Commission, Station Place, 100 F Street, NE., Washington, DC 20549–1090.

All submissions should refer to File Number SR–MSRB–2006–05. This file number should be included on the subject line if e-mail is used. To help the Commission process and review your comments more efficiently, please use only one method. The Commission will post all comments on the Commission's Internet Web site (*http://www.sec.gov/rules/sro.shtml*). Copies of the submission, all subsequent amendments, all written statements with respect to the proposed rule change that are filed with the Commission, and all written communications relating to the proposed rule change between the Commission and any person, other than those that may be withheld from the public in accordance with the provisions of 5 U.S.C. 552, will be available for inspection and copying in the Commission's Public Reference Room. Copies of such filing also will be available for inspection and copying at the principal office of the MSRB. All comments received will be posted without change; the Commission does not edit personal identifying information from submissions. You should submit only information that you wish to make available publicly. All submissions should refer to File Number SR–MSRB–2006–05 and should be submitted on or before August 10, 2006.

For the Commission, by the Division of Market Regulation, pursuant to delegated authority.[12]

J. Lynn Taylor,

Assistant Secretary.

[FR Doc. E6–11492 Filed 7–19–06; 8:45 am]

BILLING CODE 8010–01–P

[8] 15 U.S.C. 78o–4(b)(2)(A).

[9] 15 U.S.C. 78s(b)(3)(A)(i).

[10] 17 CFR 240.19b–4(f)(1).

[11] *See* Section 19(b)(3)(C) of the Act, 15 U.S.C. 78s(b)(3)(C).

[12] 17 CFR 200.30–3(a)(12).

SECURITIES AND EXCHANGE COMMISSION

[Release No. 34–54155; File No. SR–NASDAQ–2006–001]

Self-Regulatory Organizations; The NASDAQ Stock Market LLC; Order Approving a Proposed Rule Change and Amendment No. 1 Thereto and Notice of Filing and Order Granting Accelerated Approval to Amendment Nos. 2 and 3 Thereto Relating to the Nasdaq Market Center

July 14, 2006.

I. Introduction

On February 7, 2006, The NASDAQ Stock Market LLC (''Nasdaq'' or ''Exchange'') filed with the Securities and Exchange Commission (''Commission''), pursuant to Section 19(b)(1) of the Securities Exchange Act of 1934 (''Act''),[1] and Rule 19b–4 thereunder,[2] a proposed rule change to integrate the operations of the existing Nasdaq Market Center, along with Nasdaq's Brut and INET facilities. On March 29, 2006, Nasdaq submitted Amendment No. 1 to the proposed rule change (''Amendment No. 1''). The proposed rule change, as amended by Amendment No. 1, was published for comment in the **Federal Register** on April 14, 2006.[3] The Commission received twelve comments regarding the proposal.[4]

[1] 15 U.S.C. 78s(b)(1).

[2] 17 CFR 240.19b–4.

[3] *See* Securities Exchange Act Release No. 53583 (March 31, 2006), 71 FR 19573 (''Single Book Proposal'').

[4] *See* letter from Kim Bang, Chief Executive Officer, Bloomberg Tradebook LLC (''Bloomberg'') (''Kim Bang'') to Brian G. Cartwright, General Counsel, Commission, dated March 6, 2006 (''Bloomberg Comment Letter I''); letter from Kim Bang, David Cummings, Chief Executive Officer, BATS Trading, Inc. (''BATS'') (''David Cummings''), Ronald Pasternak, President, Direct Edge ECN LLC, and Martin Kaye, Chief Executive Officer, Track ECN (''Track'') (''Martin Kaye'') to Robert L.D. Colby, Acting Director, Division of Market Regulation (''Davision''), Commission, dated March 21, 2006 (''ECN Comment Letter''); letter from Kim Bang to Jonathan G. Katz, Secretary, Commission (''Jonathan Katz''), dated May 5, 2006 (''Bloomberg Comment Letter II''); letter from David Cummings to Christopher Cox, Chairman, Commission (''Chairman Cox''), dated May 5, 2006 (''BATS Comment Letter''); letter from Martin Kaye to Chairman Cox, dated May 5, 2006 (''Track Comment Letter I''); letter from Leonard J. Amoruso, Senior Managing Director and Chief Compliance Officer, Knight Capital Group, Inc. (''Knight'') to Nancy M. Morris, Secretary, Commission (''Nancy Morris''); dated May 5, 2006 (''Knight Comment Letter''); letter from C. Thomas Richardson, Managing Director, Citigroup Global Markets Inc. (''Citigroup'') to Nancy Morris, dated May 17, 2006 (''Citigroup Comment Letter''); letter from Kim Bang to Nancy Morris, dated May 30, 2006 (''Bloomberg Comment Letter II''); letter from David C. Chavern, Vice President, Capital Markets Program, U.S.

Continued

On July 7, 2006, Nasdaq filed Amendment No. 2 to the proposed rule change (''Amendment No. 2''). On July 14, 2006, Nasdaq filed Amendment No. 3 to the proposed rule change (''Amendment No. 3''). This order approves the proposed rule change, as amended by Amendment No. 1. Simultaneously, the Commission is providing notice of filing of Amendment Nos. 2 and 3 and granting accelerated approval of Amendment Nos. 2 and 3.

II. Description

Nasdaq proposes to combine the operations of the existing Nasdaq Market Center with its Brut and INET facilities to create a single integrated system, with a single pool of liquidity (the ''Integrated System'' or ''System''). The Integrated System would only accept automatic executions and would eliminate Nasdaq's current order delivery functionality. The Integrated System is designed to enable Nasdaq to operate its execution system as that of a national securities exchange rather than as a national securities association, pursuant to the Commission order, dated January 13, 2006, approving Nasdaq's application to register as a national securities exchange.[5] In addition, Nasdaq has designed the Integrated System to comply with the requirements of Rules 610 and 611 of Regulation NMS under the Act (''Regulation NMS'').[6]Nasdaq has designated August 28, 2006 as the initial implementation date for this System.[7]

Nasdaq currently operates three execution systems: (1) The Nasdaq Market Center, formerly known as SuperMontage (''NMC Facility''); (2) the Brut ECN, a registered broker-dealer that is a Nasdaq subsidiary (''Brut Facility''); and (3) the INET ECN, which is operated by Brut, LLC, a subsidiary of Nasdaq (''INET Facility'') (collectively, the ''Nasdaq Facilities'').[8] Currently, the Nasdaq Facilities are all linked, but separate, each operating pursuant to independent Commission-approved rules, with the NMC Facility operating under the 4700 Series, the Brut Facility operating under the 4900 Series, and the INET Facility operating under the 4950 Series.

Under the proposal, as amended, Nasdaq seeks to integrate the matching systems of the three Nasdaq Facilities into a single matching system, governed by a single set of rules. To ease the transition for Nasdaq participants, the Integrated System would be accessible through the same connectivity by which users currently access each of the Nasdaq Facilities, and use functionality that is already approved and operating within one or more of the Nasdaq Facilities. For example, the Integrated System would use slightly modified functionality from the INET Facility for order entry, display, processing, and routing, and draw on functionality in the NMC Facility for the opening and closing processes. Participants would remain subject to general obligations applicable to all Nasdaq Facilities, including honoring System trades, complying with all Commission and Nasdaq rules, and properly clearing and settling trades. The proposed rule change, as amended, is designed to ensure Nasdaq's readiness to comply with Regulation NMS and facilitate Nasdaq's operation as a national securities exchange.

As the proposed rule change merges the three Nasdaq Facilities into a single platform, it also simplifies Nasdaq's rules by merging five sets of rules (the 4600, 4700, 4900, 4950, and 5200 Series) into two (the 4600 and 4750 Series). The proposed 4600 Series would govern Nasdaq participants, while the proposed 4750 Series would govern the operation of the Integrated System. The proposed rule change would delete in the following series of rules in their entirety: Series 4700 (Nasdaq Market Center—Execution Services), Series 4900 (Brut Systems), Series 4950 (INET System), and Series 5200 (Intermarket Trading System/ Computer Assisted Execution System). The proposed rule change would add new Series 4750 (Nasdaq Market Center—Execution Services) and modify current Series 4600 (Requirements for Nasdaq Market Makers and Other Nasdaq Market Center Participants), including renumbering rules governing participants' obligations to honor trades and to comply with applicable rules and registration requirements.

In addition to reorganizing the rules, and making changes to the Exchange's rules for exchange and Regulation NMS readiness, the proposed rule change, as amended, addresses, among other things, openings and closings, the order display/matching system, order types, time in force designations, anonymity, routing, book processing, adjustment of open orders,[9] and Nasdaq's plan for a phased-in implementation of the proposed rule change.

In Amendment No. 2, because of the extension of certain compliance dates relating to Regulation NMS, Nasdaq proposed to modify certain rules such that their effectiveness would coincide with the Regulation NMS compliance dates announced by the Commission. Amendment No. 2 also contained a number of non-substantive changes and technical corrections to clarify the proposal.

In Amendment No. 3, Nasdaq proposed to schedule the implementation of the System beginning August 28, 2006.[10] Nasdaq described its planned phase-in schedule for the Integrated System and intention to test the System during the month of July and early in August prior to the transition. Then, beginning August 28, 2006, Nasdaq would transition Nasdaq-listed securities in three groups over a three-week period with 15 to 30 Nasdaq-listed stocks the first week, an additional 100–200 Nasdaq-listed stocks the second week, followed by the remaining Nasdaq-listed stocks the third week. Following the transition of Nasdaq stocks, Nasdaq would transition all non-Nasdaq-listed securities (*i.e.*, NYSE, American Stock Exchange (''Amex''), and regional-listed stocks). Nasdaq noted that it plans to monitor the implementation and adjust the schedule as needed to maintain an orderly transition.

III. Solicitation of Comments

Interested persons are invited to submit written data, views, and arguments concerning the foregoing, including whether Amendment Nos. 2 and 3 are consistent with the Act. Comments may be submitted by any of the following methods:

Electronic Comments

- Use the Commission's Internet comment form (*http://www.sec.gov/rules/sro.shtml*); or

Chamber of Commerce (''USCC'') to Nancy Morris, dated June 8, 2006 (''USCC Comment Letter''); letter from David Colker, National Stock Exchange (''NSX'') to Chairman Cox, dated June 20, 2006 (''NSX Comment Letter''); letter from Kim Bang to Nancy Morris, dated June 23, 2006 (''Bloomberg Comment Letter IV''); and letter from Martin Kaye to Chairman Cox, dated July 3, 2006 (''Track Comment Letter II'').

[5] *See* Securities Exchange Act Release No. 53128 (January 13, 2006), 71 FR 3550 (January 23, 2006) (''Exchange Application Order'').

[6] *See* Securities Exchange Act Release No. 51808 (June 9, 2005), 70 FR 37496 (June 29, 2005).

[7] *See* Amendment No. 3.

[8] In its Single Book Proposal, Nasdaq noted that, until January 31, 2006, INET ATS, Inc. was a registered broker-dealer and a member of the NASD. On February 1, 2006, the INET broker-dealer and a member of the NASD. On February 1, 2006, the INET broker-dealer was merged into the Brut broker-dealer which is a member of the New York Stock Exchange (''NYSE''). Nasdaq states that it will continue to operate the Brut Facility and INET Facility under the rubric of a single broker-dealer until the Integrated System is fully operational. *See* Single Book Proposal at 19589.

[9] *See supra* note 3.

[10] The Commission notes that Amendment No. 3 replaces the August 14, 2006 implementation date that Nasdaq had proposed in Amendment No. 2.

• Send an e-mail to *rule-comments@sec.gov.* Please include File Number SR–NASDAQ–2006–001 on the subject line.

Paper Comments

• Send paper comments in triplicate to Nancy M. Morris, Secretary, Securities and Exchange Commission, 100 F Street, NE., Washington, DC 20549–1090.

All submissions should refer to File Number SR–NASDAQ–2006–001. This file number should be included on the subject line if e-mail is used. To help the Commission process and review your comments more efficiently, please use only one method. The Commission will post all comments on the Commission's Internet Web site (*http://www.sec.gov/rules/sro.shtml*). Copies of the submission, all subsequent amendments, all written statements with respect to the proposed rule change that are filed with the Commission, and all written communications relating to the proposed rule change between the Commission and any person, other than those that may be withheld from the public in accordance with the provisions of 5 U.S.C. 552, will be available for inspection and copying in the Commission's Public Reference Room. Copies of the filing also will be available for inspection and copying at the principal office of the Exchange. All comments received will be posted without change; the Commission does not edit personal identifying information from submissions. You should submit only information that you wish to make available publicly. All submissions should refer to File Number SR–NASDAQ–2006–001 and should be submitted on or before August 10, 2006.

IV. Summary of Comments Received

The Commission received twelve comment letters, representing seven different entities, on the proposed rule change.[11] Five of the seven commenters either directly or indirectly operate electronic communications networks (''ECNs''). Each of the ECN commenters opposed the proposed rule change. The remaining two commenters did not directly support or oppose the proposal.

Bloomberg submitted four comment letters. The Bloomberg Comment Letter I was submitted prior to Nasdaq's submission of Amendment No. 1. In that letter, Bloomberg commented on one provision of the proposal that would have prohibited members from charging access fees triggered by the execution of a quotation within the System.[12] Bloomberg suggested that such a provision would violate Section 6(e)(1) of the Act,[13] which states that ''no national securities exchange may impose any schedule or fix rates of commissions, allowances, discounts, or other fees to be charged by its members.'' In addition, the Bloomberg Comment Letter I asserted that the Form 19b–4 did not adequately discuss or justify the burdens on competition with respect to the proposed prohibition on fees.[14] Bloomberg recommended that Nasdaq withdraw the provision of the proposal regarding the prohibition of fees. In Amendment No. 1, Nasdaq eliminated its proposal to prohibit members from charging access fees.[15]

In its second comment letter, Bloomberg objected to proposed Nasdaq Rule 4623(b)(5), which would eliminate the order delivery functionality from Nasdaq's rules, because it would expose ECNs to the risk of dual liability.[16] Bloomberg said that dual liability was ''a risk that in the past the Commission found to justify requiring Nasdaq to provide order delivery as opposed to execution delivery.'' [17] Bloomberg opined that eliminating the order delivery functionality, and thereby requiring all Nasdaq participants to accept automatic execution, would force ECNs to ''abandon their current business models and begin to act, involuntarily, as dealers;'' currently, unlike market makers, ECNs act as agency brokers and do not carry inventory or act as principal.[18] Bloomberg also asserted that because ECNs do not earn a market maker's bid-ask spread, being forced to ''eat'' an execution could ''never be profitable'' for ECNs.[19] Bloomberg concluded that this aspect of the proposal would force ECNs out of the Nasdaq market. Bloomberg questioned how investors and the national market system would be well served by eliminating the competitive liquidity and investor choices provided by ECNs from the Nasdaq platform.[20]

The Bloomberg Comment Letter II took issue with Nasdaq's claim that the order delivery functionality of ECNs made Nasdaq less competitive by slowing its execution services. Bloomberg stated that Nasdaq's claim did not include any data or factual support, and was ''incredible on its face.'' [21] Bloomberg noted that Nasdaq market participants entering orders could effectively choose to have their orders sent to automatic execution participants; thus, if order delivery ECNs were consistently slower or less efficient, they would suffer dire business consequences.[22] The comment letter also noted that Nasdaq itself routes orders to other market centers, such as Archipelago, and that there was no indication that this routing slowed down its system. Bloomberg stated that its typical response time to incoming Nasdaq orders was 5–20 milliseconds. Bloomberg posited that slow quotation updates, rather than order delivery delays, were the true cause of Nasdaq's system slowdowns. Bloomberg noted that the Nasdaq Quotation Dissemination Service feed had latencies of 500 milliseconds or more during periods of high market activity.[23]

Bloomberg also disagreed with Nasdaq's characterization of the Division's response to Question 5 of its Responses to Frequently Asked Questions Concerning Rule 611 and Rule 610 of Regulation NMS.[24] In the Single Book Proposal, Nasdaq stated that it did not believe that it could offer order delivery functionality and also satisfy Question 5's standard of continuously providing ''a response to incoming orders that does not significantly vary between orders handled entirely within the SRO trading facility and orders delivered to the ECN.'' [25] In Bloomberg's view, Question

[11] *See supra* note 4. Other than the Bloomberg Comment Letter I, all the comment letters discussed not only SR–NASDAQ–2006–001, but SR–NASD–2006–048 as well. In NASD–2006–048, Nasdaq propoess to charge an order delivery fee of 10 cents per 100 shares to order delivery participants on its system. *See* Securities Exchange Act Release No. 53644 (April 13, 2006), 71 FR 20149 (April 19, 2006) (''Order Delivery Fee Proposal''). The summary here focuses on the comment letter discussions relating to SR–NASD–2006–001, rather than those relating to the Order Delivery Fee Proposal.

[12] Bloomberg Comment Letter I at 1–2.

[13] 15 U.S.C. 78f(e)(1).

[14] Boomberg Comment Letter I at 2–4.

[15] *See infra* Section V.

[16] Bloomberg Comment Letter II at 1.

[17] Bloomberg Comment Letter II at 8–9, note 7 (citing Securities Exchange Act Release No. 43863 (January 19, 2001), 66 FR 8020 (January 26, 2001) (''SuperMontage Order'')), *See also* ECN Comment Letter at 3.

[18] Bloomberg Comment Letter II at 4; *see also* Citigroup Comment Letter at 1.

[19] Bloomberg Comment Letter II at 4.

[20] Bloomberg Comment Letter II at 2, 10. Bloomberg noted that the ''independent ECNs'' at risk represent some 15% of the total Nasdaq volume.

[21] Bloomberg Comment Letter II at 5.

[22] Bloomberg Comment Letter II at 5–6.

[23] Bloomberg Comment Letter II at 6–8.

[24] Division of Market Regulation (''Division''), Responses to Frequently Asked Questions Concerning Rule 611 and Rule 610 of Regulation NMS, dated January 27, 2006 (''NMS FAQs'') (available at *http://www.sec.gov/divisions/marketreg/rule611faq.pdf*).

[25] Single Book Proposal at 19591, citing NMS FAQs at Question 5.

5 does not ''authorize Nasdaq to drop order delivery without considering the factors the Division cited.'' Bloomberg believed that the Division suggested that Nasdaq could ''continue to deliver orders to an ECN as long as Nasdaq's order-handling performance does not significantly vary between orders handled entirely within the SRO trading facility and orders delivered to the ECN.'' [26] Rather than considering whether it could meet the conditions outlined by the Division in its NMS FAQs relating to order delivery functionality, Bloomberg believed that Nasdaq chose not to confront the issue. Bloomberg believed that the ''facts demonstrate that there is no valid basis for Nasdaq's proposed deletion of order delivery to ECNs that can respond within milliseconds.'' [27]

Bloomberg also argued that the proposed rule change was inconsistent with the Act, in that Nasdaq's analysis of the proposal's impact on competition failed to consider ''the liquidity that ECN participants provide to investors, the advantage this brings to investors and the internal discipline and drive to innovation within Nasdaq itself that is provided by the ECNs.''[28]

Bloomberg posited that the proposed rule change was inconsistent with Section 6(b)(5) of the Act [29] because it discriminated unfairly against ECNs in that the only order delivery participants on Nasdaq are ECNs. Bloomberg also opined that the proposed rule change was inconsistent with Nasdaq's obligations under the Act to promote a free and open market and a national market system. In addition, Bloomberg believed that the proposal would violate Section 6(b)(8) of the Act [30] by imposing burdens on competition that are not necessary or appropriate in furtherance of the purposes of the Act. Finally, Bloomberg noted that Section 3(f) of the Act [31] requires the Commission to consider whether the proposed rule change would promote competition.[32]

In its comment letter, Citigroup stated its belief that the National Association of Securities Dealers, Inc.'s (''NASD'') Alternative Display Facility (''ADF'') currently does not provide a viable alternative to the Nasdaq platform. Citigroup cited the ADF's connectivity costs, inability to quote NYSE- and Amex-listed securities, and inability to display sub-penny quotations to four decimal places for sub-$1.00 securities. In addition, Citigroup asserted that the ADF was a more expensive facility for ECNs, because it charged for quotation updates and did not have a general revenue sharing plan. Citigroup also believed that the ADF provided inadequate order protection because it would not provide an aggregate top-of-the-book quotation with protection under Rule 611 of Regulation NMS.[33]

In support of its claim that the ADF is not a viable alternative to Nasdaq, Citigroup noted that daily volume on the ADF averaged approximately fifteen million shares compared to the total daily volume of approximately 1.7 billion shares for Nasdaq securities.[34] Finally, Citigroup said that the Commission, in response to various ADF-related comments in the Nasdaq exchange application context,[35] indicated that the ADF was not a viable alternative to the Nasdaq Market Center.[36]

In its third comment letter, responding to Nasdaq's initial comment response letter,[37] Bloomberg endorsed the ''main thrust'' of Citigroup's comment letter, in particular supporting Citigroup's assertion that the ADF was not a viable alternative to Nasdaq, pointing to the ADF's connectivity issues and its lack of capability to provide an aggregate top-of-book quotation under Rule 611 of Regulation NMS.[38] Bloomberg also reiterated its disagreement with Nasdaq's assertion that retaining order delivery would slow down the Nasdaq market.[39] In addition, Bloomberg emphasized that several other ECNs shared their concerns about the proposal.[40]

Bloomberg stated that, contrary to Nasdaq's assertions in its initial comment response letter, the existing platform of the NSX is not a viable venue for multiple participants, particularly in light of its limited capacity. While acknowledging that BATS had moved from Nasdaq to NSX, Bloomberg pointed out that, notwithstanding that BATS is a very new ECN and has a relatively light share volume, BATS experienced a significant decrease in trading volume following its move to NSX. In addition, Bloomberg argued that, because the current NSX platform is unable to attribute quotes for multiple participants, market participants might be required to build temporary connectivity to each ECN participating in NSX, which would divert the industry's attention and resources at a time when implementation of Regulation NMS and industry consolidation issues were already pushing programming capacity to its limits.[41]

Bloomberg also believed that Nasdaq, in its initial comment response letter, misstated the Commission's duties under the Act. Bloomberg opined that the Act put a special burden on self-regulatory organizations (''SROs'') if an SRO such as Nasdaq wished to change an existing rule or system. Bloomberg believed that Nasdaq must demonstrate that such change is lawful, does not unfairly discriminate among members, and that any resulting burden on members is necessary or appropriate in furtherance of the purposes of the Act, which Bloomberg contrasted with an SRO's own commercial purposes. In addition, Bloomberg believed that whether other national securities exchanges had similar systems should not be relevant to the Commission's analysis.[42]

Bloomberg also posited that the data Nasdaq provided in its initial comment response letter pertaining to order delivery transactions was contextually insufficient. Bloomberg pointed to the speed of Nasdaq's quotation updates as a factor in order failures, and noted that Nasdaq had not provided data regarding the speed of quotation updates during high volume openings and closings. Bloomberg also suggested that, rather than removing order delivery functionality from its system, Nasdaq should establish rules to mandate faster quotation updates. In addition, Bloomberg proposed that Nasdaq could prevent some ECN outliers from exceeding its 5-second response time rule by mandating a 500-millisecond or even 50-millisecond rule.[43]

Bloomberg also noted that, based on public statements of Nasdaq and the Commission, an order delivery ECN would have reasonably believed that either order delivery functionality would remain on the Nasdaq system indefinitely or an order delivery ban would not occur until the fall of 2006 at the earliest.[44] Bloomberg contended that it was not seeking to slow down Nasdaq's Single Book Proposal, but rather Nasdaq had accelerated the

[26] Bloomberg Comment Letter II at 7.

[27] Bloomberg Comment Letter II at 7–8.

[28] Bloomberg Comment Letter II at 8.

[29] 15 U.S.C. 78f(b)(5).

[30] 15 U.S.C. 78f(b)(8).

[31] 15 U.S.C. 78c(f).

[32] Bloomberg Comment Letter II at 9–11.

[33] Citigroup Comment Letter at 2–3.

[34] Citigroup Comment Letter at 3.

[35] *See supra* note 5.

[36] Citigroup Comment Letter at 3, quoting Exchange Application Order at 57–58 (referring to comments from the Securities Industry Association and Instinet).

[37] *See infra* note 75.

[38] Bloomberg Comment Letter III at 1.

[39] Bloomberg Comment Letter III at 2.

[40] Bloomberg Comment Letter III at 2.

[41] Bloomberg Comment Letter III at 2–3.

[42] Bloomberg Comment Letter III at 4–6.

[43] Bloomberg Comment Letter III at 6–8.

[44] Bloomberg Comment Letter III at 8–9.

timing of the new system's roll-out. In addition, Bloomberg noted that the roll-out of the Single Book Proposal is not necessary to the commencement of Nasdaq's operation as an exchange and ''would visit needless disruption and dislocation not only on the independent ECNs but on the market as a whole'' and would ''unfairly disadvantage independent ECNs and regional exchange competitors, such as NSX.'' [45]

Bloomberg also believed that the elimination of order delivery functionality would burden competition for order flow in Nasdaq-listed securities. Bloomberg claimed that Nasdaq acquired INET and Brut ''with a view to curtailing competition for order flow in Nasdaq securities'' and was now ''attempting to perfect its monopoly by crushing the remaining independent ECNs.'' [46] Finally, Bloomberg believed that Nasdaq, in its initial comment response letter, misstated the Commission's authority when it said that the Commission lacked the statutory authority to provide a delay. Bloomberg believed that the Commission has clear authority to require Nasdaq to provide an adequate transition period in its proposal, and could request that Nasdaq amend its proposal to build in such a delay.[47]

The remaining ECN commenters each endorsed the positions set forth in the Bloomberg Comment Letter II.[48] Some commenters also expressed their concern not only about short-term market dislocation and disruption,[49] but also regarding the long-term loss of investor choice.[50] In particular, Bloomberg stated that, since Nasdaq's acquisition of the Brut and INET ECNs in the past two years, trading in the Nasdaq market had become more concentrated and less competitive. Bloomberg opined that Nasdaq was driving other ECNs off its system to allow it ''to charge monopoly rents for access to its market and for market data.'' [51] In addition, some of the commenters felt that Nasdaq's proposal represented a for-profit exchange using the regulatory process to eliminate competition.[52]

Bloomberg also noted that it did not believe that requiring Nasdaq to maintain its order delivery functionality would imply an affirmative obligation for other national securities exchanges to provide the same.[53] Finally, Bloomberg and Track requested that if the Commission decided to approve the proposed rule change, more time should be given to the ECNs to find another venue to operate their business.[54] Similarly, the USCC encouraged the Commission to, as a matter of good process, ''consider the need for appropriate transition periods'' should the proposed rule change be adopted.[55]

In response to Nasdaq's fourth comment letter regarding technical difficulties relating to INET's participation in the NSX,[56] NSX submitted a comment letter to describe its relationship with Nasdaq and INET, in particular noting that NSX's dissemination of quotations for Nasdaq may be slow because of Nasdaq's own internal system delays.[57] NSX also noted that it intended to build a robust, state-of-the-art trading system that should help minimize future problems related to the capacity of, or linkage to, its market.[58]

On June 23, 2006, Bloomberg submitted its fourth comment letter, welcoming the USCC Comment Letter's call for an appropriate transition period, and describing Nasdaq's third and fourth response letters [59] as containing misleading statements and false assertions.[60] Bloomberg believed that Nasdaq's characterization in its third comment letter that the two ECNs operating on NSX (BATS and INET) were cohabitating with little disruption contrasted with Nasdaq's fourth response letter which stated that the NSX platform was experiencing severe capacity overages and delays.[61] In addition, Bloomberg said that Nasdaq's claim in its fourth comment letter that the Commission had ordered INET to cease quoting in NSX by September 1, 2006 was untrue, noting that the Commission merely recognized a Nasdaq representation that it would cease quoting in NSX and the correct date was September 30, 2006.[62] Bloomberg emphasized that the difference between the two dates was crucial, and stated that the ''Commission understood that additional time beyond September 30, 2006 might be prudent and necessary.'' [63]

Bloomberg also reiterated its prior arguments regarding the need for business certainty and that Nasdaq had given the expectation that its Single Book Proposal would be rolled out in December 2006. Bloomberg said that, because of the resulting uncertainty and confusion of Nasdaq's earlier proposed roll-out date, ECNs have had to explore and develop, at substantial cost, a number of competing alternative scenarios; for example, Bloomberg has explored an interim migration to another platform, temporarily participating in Nasdaq while trying to prevent double execution, and ultimately migrating to an exchange platform that offers order delivery and quotation display. Bloomberg stated that the lack of certainty has ''impeded sound business planning and threatens to constrict investor choice and the development of sound market alternatives.'' [64]

Bloomberg also disputed Nasdaq's statement regarding its participation in Nasdaq's Opening and Closing Crosses, stating that it has had to develop special facilities to integrate during such times with Nasdaq and that, during those limited periods, Bloomberg simply operates as an order-routing system.[65] In addition, Bloomberg also disputed various characterizations by Nasdaq, including its NSX participation, percentage of total Nasdaq trading volume attributable to order delivery executions, and the data Nasdaq presented with regard to Bloomberg's response times in early May 2006.[66] Bloomberg also again suggested that Nasdaq could enforce its 5-second response time rule or even impose a more stringent 50-millisecond rule.[67] Finally, Bloomberg believed that, contrary to Nasdaq's assertions in its response letters, it was proper for the Commission to consider comment letters received after the comment period deadline had expired.[68]

On July 3, 2006, Track submitted a second comment letter to clarify to the Commission that it was still a participant in the Nasdaq Market Center, reiterate its comments submitted previously as part of the ECN Comment

[45] Bloomberg Comment Letter III at 9–10.

[46] Bloomberg Comment Letter III at 10.

[47] Bloomberg Comment Letter III at 10–11.

[48] *See* BATS Comment Letter, Track Comment Letter I, Knight Comment Letter.

[49] *See* BATS Comment Letter, Track Comment Letter I at 1, Bloomberg Comment Letter II at 2.

[50] *See* BATS Comment Letter, Bloomberg Comment Letter II at 2.

[51] *See* Bloomberg Comment Letter II at 2.

[52] *See* BATS Comment Letter, Track Comment Letter I at 1, Bloomberg Comment Letter II at 1, 3.

[53] *See* Bloomberg Comment Letter II at 11.

[54] *See* Bloomberg Comment Letter II at 11 (delay in the effective date); Track Comment Letter I at 2 (phased-in approach).

[55] *See* USCC Comment Letter at 1–2.

[56] *See infra* note 99.

[57] *See* NSX Comment Letter at 1–2.

[58] *See* NSX Comment Letter at 1–2.

[59] *See infra* Nasdaq Response Letter III and Nasdaq Response Letter IV, notes 92 and 99.

[60] *See* Bloomberg Comment Letter IV at 1–2 and 4–5.

[61] *See* Bloomberg Comment Letter IV at 2.

[62] *See* Bloomberg Comment Letter IV at 3 (citing Nasdaq Rule 4720).

[63] *See* Bloomberg Comment Letter IV at 3.

[64] *See* Bloomberg Comment Letter IV at 4.

[65] *See* Bloomberg Comment Letter IV at 5.

[66] *See* Bloomberg Comment Letter IV at 5–7.

[67] *See* Bloomberg Comment Letter IV at 7–8.

[68] *See* Bloomberg Comment Letter IV at 8.

Letter, and support the comment letters of Citigroup, USCC, and Bloomberg.[69] Track emphasized that Bloomberg was not the sole party objecting to aspects of the Single Book Proposal, but that it and other ECNs were interested parties as well. Track stated that it continued to execute significant business through Nasdaq's platform. In addition, it noted that only one percent of its volume was on the ADF, which it did not believe was a viable place to conduct its business. Track believed that NSX's trading platform currently under development, which it expected to include order delivery functionality, would be a viable alternative. However, Track noted that the new NSX platform was not scheduled to be ready until September 2006. Adding in two months to ramp up its volume on the new system, Track requested that it be able to continue to operate on Nasdaq's platform until the NSX platform is operational and capable of handling the volumes of business required by the ECNs. Track also noted that it planned to begin testing on the new platform in July 2006.[70] Track stated that its only issue with the Single Book Proposal was Nasdaq's decision to accelerate its roll-out timetable for its integrated system because it provided too brief a period for migration to workable venues, and that ''[a]ll other matters with regard to Nasdaq's Exchange status are not at issue with Track ECN.'' [71]

V. Nasdaq's Response to Comments

In Amendment No. 1, Nasdaq addressed the Bloomberg Comment Letter I and the ECN Comment Letter. Nasdaq revised its statement on burden on competition to state that it operates in an intensely competitive global marketplace where its ability to compete is ''based in large part on the quality of its trading systems, the overall quality of its market and its attractiveness to the largest number of investors, as measured by speed, likelihood and cost of executions, as well as spreads, fairness, and transparency.'' [72] Nasdaq asserted that its Single Book Proposal would have a pro-competitive effect by reducing overall trading costs, increasing price competition, and spurring further initiative and innovation among market centers and market participants. In addition, Nasdaq believed that its discontinuation of the order delivery functionality was pro-competitive, because such functionality harmed its competitiveness vis-à-vis other exchanges and reduced the overall quality of its marketplace.

Nasdaq also defended its proposal to require all of its participants to accept automatic execution by eliminating its order delivery functionality. Nasdaq stated that its order delivery functionality is unique among exchanges and that no other exchange offers order delivery to its participants. Nasdaq asserted that such functionality is ''expensive, complex, and detrimental to system performance, thereby increasing the cost and complexity of Nasdaq's trading systems and decreasing its performance.'' Nasdaq also believed that order delivery discourages order flow providers from sending orders to Nasdaq for processing because market participants cannot predict whether their orders will be delivered or automatically executed, thereby hurting Nasdaq's ability to compete with other markets.[73]

In addition, Nasdaq noted that, within its own system, the presence of order delivery negatively impacts the competition between market makers, ECNs/alternative trading systems (''ATSs''), and agency broker-dealers, because market makers and agency broker-dealers (who are required to participate in Nasdaq via automatic execution) view themselves as disadvantaged relative to ECNs and ATSs that can choose to participate either via automatic execution or order delivery. Nasdaq believed that removing the order delivery functionality would level the playing field between its market participants. Finally, Nasdaq noted that its ability to provide the fastest, fairest, and most efficient system possible was particularly important given the Commission's adoption of Regulation NMS.[74]

On May 8, 2006, Nasdaq again responded to the comments regarding the proposed rule change.[75] Nasdaq stated that the Single Book Proposal would ''benefit investors by offering a faster, fairer, more efficient and more transparent system that executes trades in strict price/time priority; promote competition by allowing Nasdaq to increase efficiency, decrease overall trading costs, and provide better service to market participants; promote the development of the national market system by integrating separate trading systems into a single pool of exchange liquidity for market participants to access; and improve regulation by complying with the Regulation NMS Access and Order Protection Rules to prevent locked and crossed markets and trade throughs.'' [76] Nasdaq contended that Bloomberg's sole dispute with the Single Book Proposal was Nasdaq's proposal to eliminate the order delivery functionality that is available only to ECNs and available only on Nasdaq.[77]

Nasdaq stated that Bloomberg was unable to identify any requirement in the Act that a national securities exchange offer order delivery functionality, and noted that no other exchange has been required to, or chosen to, offer such functionality. Nasdaq stated that any requirement to offer such functionality should apply equally to all SRO markets.[78] In addition, Nasdaq rejected Bloomberg's claim that it was unfairly discriminating against ''independent'' ECNs to the advantage of its own ECN facilities (*i.e.*, Brut and INET), because this proposal would integrate the Brut and INET execution facilities with the Nasdaq Market Center into a single trading platform.[79]

Nasdaq emphasized that its proposal would not exclude ECNs but rather it would welcome them to participate in Nasdaq provided that they accept automatic execution. Nasdaq opined that the ECN commenters' systems were fully automated, and that they had declined to participate in Nasdaq via automatic execution to ''isolate orders within [their] own system[s] and to preserve internal executions as much as possible.'' [80] Nasdaq also noted that several agency brokers participate in Nasdaq, accept automatic executions, and manage their risk of double executions by cancelling their quote or order on Nasdaq before matching an order internally.[81]

Nasdaq stated that Bloomberg could conduct its business elsewhere and that the Act does not require Bloomberg to post its orders in Nasdaq. As an example, Nasdaq noted that other ECNs have elected to move their business to regional exchanges or the ADF. Nasdaq said that Bloomberg's contention was based on the false premise of a Nasdaq monopoly, and that Bloomberg was a privileged Nasdaq participant, as opposed to a ''prisoner'' of Nasdaq's system.[82]

Nasdaq reiterated its concerns about the delay in executions caused by order

[69] *See* Track Comment Letter II at 1.

[70] *See* Track Comment Letter II at 2.

[71] *See* Track Comment Letter II at 2.

[72] *See* Single Book Proposal at 19596.

[73] *Id.*

[74] *See* Single Book Proposal, *supra* note 3.

[75] *See* Letter from Edward S. Knight, Executive Vice President and General Counsel, Nasdaq to Morris, dated May 8, 2006 (''Nasdaq Response Letter I'').

[76] Nasdaq Response Letter I at 1.

[77] Nasdaq Response Letter I at 2.

[78] Nasdaq Response Letter I at 2.

[79] Nasdaq Response Letter I at 2.

[80] Nasdaq Response Letter I at 3.

[81] Nasdaq Response Letter I at 3, note 6.

[82] Nasdaq Response Letter I at 4.

delivery. Nasdaq stated that order delivery interactions were more time consuming than automatic execution interactions, and that unlike automatic execution, orders delivered to an ECN could be rejected if the shares had been accessed by an ECN's direct subscribers. Nasdaq also presented data relating to order delivery during the week of March 13, 2006, which included a so-called ''expiration Friday'' on March 17th. During that week, Nasdaq stated that: 100 percent of automatic execution orders that Nasdaq attempted to execute actually executed; 14 percent of total orders that Nasdaq delivered to order delivery participants failed to execute and for one order delivery participant the overall failure rate exceeded 25 percent; 55.6 percent of orders delivered to order delivery participants prior to 9:30:15 failed to execute; 27.9 percent of orders delivered to order delivery participants between 9:30:15 and 9:30:30 failed to execute; 12.7 percent of orders delivered to order delivery participants between 9:30:30 to 3:59:30 failed to execute; and prior to 9:30:15, three order delivery participants had mean response times of over four, nine, and twenty seconds per order during that week.[83]

In addition to the time and response issues, Nasdaq stated that it was costly to maintain the order delivery functionality because it demanded ''disproportionate system capacity and unique specifications, requirements, and programming not available to or needed by the vast majority of Nasdaq participants * * *.'' Nasdaq emphasized that these are costs no other SRO incurs. Nasdaq also believed that ECN response times and rejection rates created strong disincentives for market participants to use Nasdaq's systems because of the uncertainty and reduced speed of an order execution.[84] In addition, Nasdaq believed that time and response issues would be exacerbated under Regulation NMS, and expressed concern again about order delivery making Nasdaq a ''slow'' market or exposing it to ''self-help'' declarations by other trading centers.[85]

Finally, Nasdaq objected to Bloomberg's request for a delay in the effective date of an approval. Nasdaq believed that this would simply ''delay the time when investors receive the benefits offered by a faster, fairer, more efficient and more transparent system.'' [86] In addition, Nasdaq noted that BATS was able to shift its order flow to the NSX in a matter of weeks, and that Nasdaq's filing provides Bloomberg with over three months to make the system changes needed for similar migration. Nasdaq also stated that there was no requirement under the Act to ''accommodate the business schedule of any individual market participant'' as it negotiated ''a beneficial arrangement to post quotes in another venue'' and that the Commission was directed by Section 19(b) of the Act to ''determine promptly whether a rule proposal is consistent with the Act and to approve or reject it accordingly.''[87]

On May 26, 2006, Nasdaq submitted to the Commission a second letter, responding to the Citigroup Comment Letter.[88] Nasdaq requested that the Commission disregard Citigroup's comment letter because Nasdaq asserted that it was untimely filed and was an attempt to use the statutory notice and comment period to delay consideration of the Single Book Proposal.[89] Nonetheless, Nasdaq responded to the substantive elements of the letter and disputed the assertions by Citigroup regarding the ADF's viability. In particular, Nasdaq noted that the predecessor of Citigroup's current OnTrade ECN, NexTrade, had been quoting on the ADF for over three years. Nasdaq also disputed Citigroup's assertion that the ADF's cost of connectivity was an ''economic disincentive,'' instead characterizing it as ''a cost of doing business'' and stating that Nasdaq's order routing technology supports connectivity to any ADF participant whose quotation is displayed through the ADF in the consolidated quotation.[90] Nasdaq also reiterated that, like Bloomberg, Citigroup failed to mention that scores of agency brokers participate on Nasdaq systems and accept automatic executions, managing their dual liability risks by cancelling their quotations or orders on Nasdaq prior to matching their orders internally. Finally, Nasdaq asserted that Citigroup misstated that there would be no alternative facility for NYSE- and Amex-listed securities and distorted the Commission's statements in the Exchange Application Order, noting that it believed that the passage cited by Citigroup related to the Commission's requirement that there be an alternative facility for non-Nasdaq stocks prior to Nasdaq's operation as an exchange.[91]

On June 8, 2006, Nasdaq submitted to the Commission a third letter, responding to the Bloomberg Comment Letter III.[92] In this letter, Nasdaq reiterated its belief that Bloomberg could participate in Nasdaq via automatic execution, that Bloomberg was technologically capable of quoting in the NASD ADF ''in a matter of days,'' and that Bloomberg did in fact have a number of alternatives to being an order delivery participant in Nasdaq.[93] Nasdaq also disagreed with Bloomberg's description of NSX's current operation and pointed out that two ECNs, INET and BATS, operate in that market with little disruption.[94] In addition, Nasdaq reiterated the critical nature of its Single Book Proposal, given the competition it faces both in the United States and abroad. Nasdaq stated that Single Book would be ''lightning fast'' and produce faster, more certain executions. In addition, Nasdaq stated that the proposal would transform its market into a strict price-time priority venue, promote competition, decrease overall trading costs, provide better service to market participants, and allow Nasdaq to comply with the access and order protection provisions of Regulation NMS.[95]

Nasdaq also stated that Bloomberg has a negative impact on Nasdaq's competitiveness, pointing to the period immediately following the market's opening as an example.[96] Nasdaq noted that, during the first week of May 2006, during the trading period prior to 9:30:15 am, Bloomberg's mean response time to delivered orders was over 5 seconds per order.[97] Finally, Nasdaq disagreed with Bloomberg's contention that eliminating order delivery was discriminatory, stating that it did not see ''how requiring all market participants to use identical automatic functionality [could] be considered discriminatory.'' [98]

On June 9, 2006, Nasdaq submitted to the Commission a fourth letter, describing INET's technological problems in NSX.[99] Nasdaq stated that, on June 8, 2006, senior officers of the

[83] Nasdaq Response Letter I at 5–6.

[84] Nasdaq Response Letter I at 6.

[85] Nasdaq Response Letter I at 6.

[86] Nasdaq Response Letter I at 6.

[87] Nasdaq Response Letter I at 7.

[88] *See* Letter from Edward S. Knight, Executive Vice President and General Counsel, Nasdaq to Morris, dated May 26, 2006 (''Nasdaq Response Letter II'').

[89] Nasdaq Response Letter II at 1–2.

[90] Nasdaq Response Letter II at 2.

[91] Nasdaq Response Letter II at 2.

[92] *See* Letter from Jeffrey S. Davis, Senior Associate General Counsel, Nasdaq to Morris, dated June 8, 2006 (''Nasdaq Response Letter III'').

[93] Nasdaq Response Letter III at 2–3, 4–5.

[94] Nasdaq Response Letter III at 3.

[95] Nasdaq Response Letter III at 3–4.

[96] Nasdaq Response Letter III at 4.

[97] Nasdaq Response Letter III at 4.

[98] Nasdaq Response Letter III at 4–5.

[99] *See* Letter from Edward S. Knight, Executive Vice President and General Counsel, Nasdaq to Cox, dated June 9, 2006 (''Nasdaq Response Letter IV'').

NSX notified Nasdaq that the NSX was ''experiencing severe capacity overages and quotation delays in its core systems * * * [and] * * * requested that Nasdaq cause INET to cease sending quotations to the NSX and stated that NSX was considering terminating INET's ability to send quotations to NSX.'' [100] Nasdaq stated that the possibility of future technology failures was increasing as message traffic has increased significantly across the industry. Nasdaq stated that it was taking all available, prudent steps to avoid future disruptions, and that approval of the Single Book Proposal would enable it to remove all quotations from NSX and avoid such technology failures.[101]

VI. Commission's Findings and Order Granting Accelerated Approval of Amendment Nos. 2 and 3

As discussed fully throughout this approval order, the Commission has carefully reviewed the proposed rule change, as amended, the comment letters, and Nasdaq responses, and finds that the proposed rule change, as amended, is consistent with the requirements of the Act and the rules and regulations thereunder applicable to a national securities exchange and, in particular, the requirements of Section 6(b) of the Act.[102] Specifically, the Commission finds that the proposed rule change, as amended, is consistent with Section 6(b)(5) of the Act [103] in that it is designed to promote just and equitable principles of trade, to foster cooperation and coordination with persons engaged in regulating, clearing, settling, processing information with respect to, and facilitating transactions in securities, to remove impediments to and perfect the mechanism of a free and open market and a national market system, and, in general, to protect investors and the public interest; and is not designed to permit unfair discrimination between customers, issuers, brokers, or dealers, or to regulate by virtue of any authority conferred by the Act matters not related to the purposes of the Act or the administration of the exchange. The Commission also finds that the proposed rule change, as amended, is consistent with Section 6(b)(8) of the Act [104] in that it does not impose any burden on competition that is not necessary or appropriate in furtherance of the purposes of the Act.

A. Elimination of Order Delivery Function

Nasdaq's proposal would require that all Nasdaq participants accept automatic executions and would eliminate order delivery processing in the newly integrated system. Nasdaq's primary rationale for this aspect of the proposal is as follows:

- Order delivery functionality is expensive, complex, and detrimental to its system and decreases system performance and no other national securities exchange is required to provide this service;
- Order delivery functionality hampers Nasdaq's ability to compete by discouraging order flow providers from sending orders to Nasdaq because market participants cannot predict whether their orders will be delivered or automatically executed;
- Order delivery functionality negatively impacts competition between market makers, ECNs/ATSs, and agency broker-dealers, because market makers and agency broker-dealers (who are required to participate in Nasdaq via automatic execution) are disadvantaged relative to ECNs and ATSs that can choose to participate either via automatic execution or order delivery;
- Nasdaq's system is completely voluntary and ECNs are not required to quote or participate in Nasdaq; and
- In light of the competition fostered by Regulation NMS, Nasdaq needs to provide the fastest, fairest, and most efficient system.

Nearly all of the commenters opposed the proposed elimination of Nasdaq's order delivery functionality.[105] The commenters suggested that the proposal was inconsistent with Sections 6(b)(5) [106] and 6(b)(8) of the Act [107] in that it unfairly discriminated between brokers or dealers and imposed a burden on competition that is not necessary or appropriate in furtherance of the purposes of the Act. The main assertions by the commenters are as follows:

- The automatic execution requirement would expose ECNs to dual liability risks;
- The automatic execution requirement would force ECNs out of the Nasdaq market and have a negative impact on their customers;
- The costs to move to another facility would be burdensome for ECNs;
- There are no viable alternatives, including the NASD ADF and regional exchanges, to participation in Nasdaq;
- Nasdaq is using its regulatory status to perfect a monopoly over Nasdaq-listed securities; and
- Order delivery does not have a negative impact on the performance of Nasdaq's system, nor would it place Nasdaq at any undue risk in light of Regulation NMS.

The Commission finds that this proposal does not unfairly discriminate among market participants, nor does it impose any burden on competition that is not necessary or appropriate in furtherance of the Act.

1. Competition Issues

The Commission believes that the Single Book Proposal is an appropriate initiative by Nasdaq to enhance the quality of its exchange through integrating its three trading platforms into a single unified system, to add efficiency in executions and to increase overall market transparency. The Commission has long held the view that ''competition and innovation are essential to the health of the securities markets. Indeed, competition is one of the hallmarks of the national market system.'' [108] The Commission notes that the notion of competition is inextricably tied with the notion of economic efficiency, and the Act seeks to encourage market behavior that promotes such efficiency, lower costs, and better service in the interest of investors and the general public.[109] Therefore, the Commission believes that the appropriate analysis to determine a proposal's competitive impact is to weigh the proposal's overall benefits and costs to competition based on the particular facts involved, such as examining whether the proposal would promote economically efficient execution of securities and fair competition between and among exchange markets and other market centers, as well as fair competition between the participants of a particular market.

The Commission notes that Nasdaq operates in a competitive global exchange marketplace for listings, financial products, and market services and competes in such an environment with other market centers, including national securities exchanges, ECNs, and other alternative trading systems, for the privilege of providing market and listing services to broker-dealers and issuers. Within Nasdaq's systems, ECNs and ATSs compete with market

[100] Nasdaq Response Letter IV at 1.

[101] Nasdaq Response Letter IV at 1–2.

[102] 15 U.S.C. 78f(b).

[103] 15 U.S.C. 78f(b)(5).

[104] 15 U.S.C. 78f(b)(8).

[105] *See, e.g.*, Bloomberg Comment Letter II at 9; Knight Comment Letter at 2; Track Comment Letter I at 1.

[106] 15 U.S.C. 78f(b)(5).

[107] 15 U.S.C. 78f(b)(8).

[108] *See* SuperMontage Order at 8049.

[109] 15 U.S.C. 78c(f).

makers and agency broker-dealers for retail and institutional order flow. Thus, the Commission views Nasdaq as an individual market as well as a piece of the larger, overall market structure.

The ECN's opposition to the instant proposal is that it will cause a disruption to their manner of doing business, and such operational changes are potentially burdensome and costly. Under the proposal, ECNs that choose to continue operating in Nasdaq will have to accept automatic executions and internally manage their quotes to prevent dual executions of the same order, while ECNs that opt to use another SRO facility to display their order flow may face reduced connectivity and higher costs. That a proposed rule change to an SRO's trading system requires a market participant to reevaluate its business model, develop new technology, or reprogram its current systems is not something that is unique to Nasdaq and moreover is not something that is unique to ECNs. Invariably, any proposed rule change to a fundamental function of an SRO market (*e.g.*, display, execution, trade-reporting, etc.) will require certain changes by the affected market participants; and more than likely such changes must be effectuated by a technological solution in an increasingly automated national market system.

As stated above, ECNs currently using Nasdaq's order delivery functionality may continue to participate in Nasdaq via automatic execution. Rather than excluding ECNs, Nasdaq is simply requiring ECNs to participate in Nasdaq on an automatic execution basis, as other participants are currently required to do. According to Bloomberg, order delivery is necessary because unlike market makers, ECNs act as agency brokers and do not carry inventory or act as principal. Without the order delivery functionality, Bloomberg contends that ECNs would be exposed to dual liability.[110] Bloomberg says that ECNs would be involuntarily forced to act as dealers and abandon their current business models.[111] Nasdaq responds that ECNs could participate as Nasdaq automatic execution participants as agency brokers by managing dual liability risks by cancelling their quote/order on Nasdaq before matching the order internally.[112] This risk management objective could be technologically achieved by ECNs giving priority to execution of the publicly displayed order in Nasdaq rather than the order flow that is only internally available on the ECN books to its subscribers.[113] In fact, Nasdaq asserts that agency-brokers on its system currently operate and manage their dual liability risks in that manner. The various ECN comment letters opposing the elimination of Nasdaq's order delivery functionality have not disputed the validity of this claim.

Nasdaq has also stated that its current order delivery functionality is costly to operate and requires disproportionate system capacity, unique specifications, and additional programming. In addition, Nasdaq has emphasized that, though ECNs may provide an automated evaluation and response to orders, the time required to send message traffic back and forth between Nasdaq and ECNs involves delays that do not exist in the case of automatic executions. This potential for delay, as well the possibility that an order could be rejected by an order delivery ECN, gives a measure of uncertainty to orders entered on Nasdaq, which may impede Nasdaq's ability to compete with other markets and provide faster executions with increased certainty.[114]

Nasdaq has stated legitimate regulatory and operational reasons for eliminating the order delivery service. For instance, Nasdaq is concerned that order delivery may cause the System to be deemed ''slow'' under Rule 611 of Regulation NMS. Although it appears that under most operating conditions, order delivery may not pose a significant risk that the System would be a ''slow'' market or expose it to the election of the ''self-help'' exception under Rule 611(b)(1) of Regulation NMS, Nasdaq raises legitimate concerns that, during periods of increased market activity or system stress, the order delivery functionality could place its market at risk.

The Commission recognizes ECNs could pose differing levels of risk to the Integrated System and that normally ECNs may, as Bloomberg commented, generally be able to respond within 5–20 milliseconds;[115] however, Nasdaq has valid concerns over the response times of its market participants and the potential for such response times to negatively impact its entire market. Thus, the prospect of a single participant's slow response time affecting the protected quotation status of the entire market under Regulation NMS is a valid consideration in Nasdaq's determination of whether it is best to retain the order delivery functionality.

ECNs also assert that the proposal is unfairly discriminatory and it imposes a burden on competition that is not necessary or appropriate in furtherance of the Act because it would force ECNs to leave the Nasdaq market to operate either in another SRO facility or the NASD ADF. The commenters argue there are no viable alternatives for the ECN business model in the marketplace, and thus the Nasdaq order delivery service, which accommodates the ECN business model, must be preserved. The Commission does not share this view.

As an initial matter, the Commission notes that the Act does not require Nasdaq to retain a market structure that supports the business operations of ECNs. Further, ECNs may post their orders in an SRO other than Nasdaq. The Commission believes that ECNs have a variety of options if they determine that, as a result of this proposal, they should forego Nasdaq participation. For example, ECNs may decide to post their liquidity to another SRO. In the past ECNs such as BATS, Brut, Instinet, Island, INET, Archipelago, and Attain have moved some or all of their activities from Nasdaq to other trading venues. Specifically, INET quotes on NSX; more recently, BATS has also moved from Nasdaq to NSX. Archipelago, through ArcaEx, became the equities trading facility of the Pacific Exchange, Inc. Other ECNs, including OnTrade (and its predecessor, NexTrade), quote in the NASD's ADF. Before Brut's purchase by Nasdaq, Brut quoted on the Boston Stock Exchange.

Accordingly, ECNs that do not want to operate under the Nasdaq's Exchange Rules have other options at this time, and other alternatives for ECNs to participate as order delivery systems are emerging. Thus, while ECNs may not view the presently available alternatives to Nasdaq to be as appealing as participating on Nasdaq via order delivery, the Commission nevertheless believes viable alternatives to Nasdaq participation exist for ECNs.

a. Alternatives to Nasdaq. In their comment letters, ECNs have been particularly critical of the capabilities of the NASD ADF and suggested that it does not constitute a true viable alternative to the Nasdaq market because it lacks: (1) An execution facility; (2) adequate order protection and quote attribution; (3) favorable revenue sharing plans; (4) sub-penny quoting up to four decimal places for securities priced less than $1.00; and (5) connectivity to ECN participants.

[110] Bloomberg Comment Letter II at 4.

[111] *See, e.g.*, Bloomberg Comment Letter II at 4.

[112] *See* Nasdaq Response Letter I at 3, note 6.

[113] Nasdaq Response Letter I at 3, note 6.

[114] Nasdaq Response Letter I at 4–6. *See also* Nasdaq Response Letter III at 3–5.

[115] *See, e.g.*, Bloomberg Comment Letter II at 7–8.

However, the Commission, on various occasions, has determined that the NASD ADF provides an alternative quotation facility for Nasdaq securities.[116] The NASD ADF does not have all the advantages and liquidity of an active exchange like Nasdaq, and thus may not currently be the *optimal* facility for an ECN and its particular business model; nonetheless, the NASD ADF facility has the basic requirements of a quotation facility for Nasdaq securities, thus providing market participants a venue other than Nasdaq in which to display their quotes.

The history of ECN participation in Nasdaq is instructive. Nasdaq began as a quotation, and then trading reporting, facility of the NASD, where quotes and trades of securities not listed on an exchange could be displayed. Later, Nasdaq displayed quotes and trades of exchange-listed stocks. Nasdaq satisfied the NASD's obligation to operate a system to collect quotes and trades arising under now Rules 601 and 602 of Regulation NMS.[117]

In 1996, the Commission adopted the Order Handling Rules,[118] enabling ECNs to comply with a requirement to publicly display market maker quotes entered into the ECN by communicating these quotes to an SRO that was willing to display them in the consolidated quote system. The Commission said that if no SRO was willing to accept these quotes, it would take steps to ensure that these ECN quotes were included in the consolidated quote by an SRO.[119]

Nasdaq, as the competing market maker quotation system for non-exchange listed stocks operated on behalf of the NASD, chose at that time to accept ECN quotes in its system. Nasdaq accommodated the ECN order delivery preferences at their own displayed size even though market makers in Nasdaq were required (against their wishes) to accept automatic execution at an NASD-imposed 1,000-share automatic execution size.[120]

Nasdaq subsequently eliminated the required 1,000-share automatic execution size, but retained automatic execution for market makers.[121] In SR–NASD–99–53,[122] Nasdaq recast its execution system as the SuperMontage system, accepting orders directly from agency brokers, subject to automatic execution. In response to criticisms raised by ECNs, SuperMontage retained an order delivery functionality for ECNs.

Because of concerns raised about the monopoly position of Nasdaq as the residual quote and trade facility of the NASD, in approving the SuperMontage, the Commission conditioned its operation on the NASD's creation of an alternate display facility that would permit NASD members to operate outside of Nasdaq and still comply with their regulatory obligations under the Order Handling Rules and Regulation ATS.[123] The Commission also required that the NASD ADF be designed to identify through the central processor the identity of the NASD member that is the source of each quote and provide a market neutral linkage to the Nasdaq and other marketplaces, but not an execution service.[124] Later, in approving a pilot program for the operation of the NASD ADF, the Commission re-stated the purpose first raised in the SuperMontage Order that the ''ADF * * * permits registered market makers and registered ECNs to display their best-priced quotes or customer limit orders * * * through the NASD. ADF market participants are required to provide other ADF market participants with direct electronic access to their quote * * *. The ADF also serves as a trade reporting and trade comparison facility. The ADF will therefore allow market participants to satisfy their order display and execution access obligations under the Order Handling Rules and Regulation ATS.''[125] The D.C. Circuit Court of Appeals later stated that the NASD ADF is an alternative display facility that was created to ''provide an alternative outlet in which market participants that did not wish to use SuperMontage could fulfill their order display and trading reporting obligations under SEC regulations.'' [126]

Subsequently, the NASD and Nasdaq chose to sunder their relationship, and Nasdaq registered as a separate national securities exchange.[127] The NASD satisfies its obligations for Nasdaq securities under Rules 601 and 602 of Regulation NMS through the ADF.

One commenter, Citigroup, suggested that the Commission ''recently indicated that ADF is not a viable alternative to the Nasdaq Market Center; referring to comments received in response to the Nasdaq application for registration as an exchange.'' In this regard, the Commission believes that its response to Nasdaq exchange application comments has been misconstrued. The Commission did not intend to imply that the ADF is not a viable alternative to the Nasdaq Market Center. Instead, in response to the aforementioned comments the Commission reiterated its general belief, a theme initially voiced in the SuperMontage Order and again in the order approving the operation of the NASD ADF, that it would not be ''consistent with the Exchange Act to allow the NASD to separate from the [Nasdaq] facilities by which it satisfies its regulatory obligations without having alternative means to do what the Exchange Act and the rules thereunder require. Accordingly, the Nasdaq Exchange may not begin operating as a national securities exchange and cease to operate as a facility of the NASD until NASD has the means to fulfill its regulatory obligations.'' [128] In the Exchange Application Order, the Commission clearly articulates the statutory and regulatory obligations the NASD must be able to satisfy prior to Nasdaq commences operation as a national securities exchange.[129] In pertinent part, the NASD must represent to the Commission that control of Nasdaq through the Preferred D Share is no longer necessary because the NASD can fulfill through means other than Nasdaq systems or facilities its obligations with respect to CTA Plan securities under Section 15A(b)(11) of the Act, Rules 602 and 603 of Regulation NMS, and the national market system plans, *i.e.*, the CTA Plan, CQ Plan, Nasdaq UTP Plan, the ITS Plan, and the Order Execution Quality Disclosure Plan, in which the NASD will participate.[130]

Thus, while Citigroup cites to the comparative various operational differences of the NASD ADF versus the Nasdaq Market Center from a business perspective, the only regulatory requirement referenced in its letter is

[116] *See, e.g.,* Securities Exchange Act Release No. 45156 (December 14, 2001), 67 FR 388 (January 3, 2002).

[117] 17 CFR 242.601–02.

[118] Securities Exchange Act Release Nos. 37619A (September 6, 1996), 61 FR 48290 (''Order Handling Rules'').

[119] *Id.*

[120] *See* Securities Exchange Act Release Nos. 42344 (January 14, 2000), 65 FR 3987 (January 25, 2000) (NASD–99–11).

[121] *See* Securities Exchange Act Release Nos. 45998 (May 29, 2002), 67 FR 39759 (June 10, 2002) (NASD–2001–66).

[122] *See* SuperMontage Order, *supra* note 17.

[123] *See* Order Handling Rules, *supra* note 118 and Securities Exchange Act Release No. 40760 (December 8, 1998), 63 FR 70844 (December 22, 1998) (''Regulation ATS'').

[124] SuperMontage Order at 8024.

[125] *See* Securities Exchange Act Release No. 46429 (August 29, 2002), 67 FR 56862.

[126] *Domestic Securities, Inc.* v. *Securities and Exchange Commission,* 333 F.3d 239, 248–249 (D.C. Cir. 2003).

[127] *See supra* note 5.

[128] *See* Exchange Application Order at 3564.

[129] *See* Exchange Application Order at 3562–64, 3566. The Commission recently modified the requirements for Nasdaq's operation as an exchange. *See* Securities Exchange Act Release No. 54085 (June 30, 2006), 71 FR 38910 (July 10, 2006).

[130] *See* Securities Exchange Act Release No. 54085 (June 30, 2006), 71 FR 38910 (July 10, 2006).

the ability of the NASD to accept quotes in non-Nasdaq listed securities, which is a pre-condition to the separation of Nasdaq from NASD and Nasdaq's Exchange operation that must be achieved by virtue of the NASD's plan participation.

The Commission recognizes that participation in the NASD ADF may require additional connectivity and related development costs for certain market participants. Again, the notion that innovation or change to a market's structure or manner of operation will require the use of technological or developmental resources is neither novel nor unforeseen. In fact, in approving Rule 610 of Regulation NMS (*i.e.*, the Access Rule) the Commission extensively discussed the connectivity requirements for participants in the NASD ADF. The Regulation NMS Order reads, in pertinent part,[131]

> The NASD is not * * * statutorily required to provide an order execution functionality in the ADF. As a national securities association, the NASD is subject to different regulatory requirements than a national securities exchange * * *.The Exchange Act does not expressly require an association to establish a facility for executing orders against the quotations of its members, although it could choose to do so. The Commission believes that market makers and ECNs should continue to have the option of operating in the OTC market, rather than on an exchange or The NASDAQ Market Center. As noted in the Commission's order approving Nasdaq's SuperMontage trading facility, this ability to operate in the ADF is an important competitive alternative to Nasdaq or exchange affiliation * * *.

The Commission further stated that:

> [R]ule 610(b)(1) requires all trading centers that choose to display quotations in an SRO display-only quotation facility to provide a level and cost of access to such quotations that is substantially equivalent to the level and cost of access to quotations displayed by SRO trading facilities. Rule 610(b) therefore may cause trading centers [*e.g.*, ECNs] that display quotations in the ADF to incur additional costs to enhance the level of access to their quotations and to lower the cost of connectivity for market participants seeking to access their quotations.

Thus, the Commission has contemplated the costs related to linking to and operating in the NASD ADF and who may appropriately bear such costs.

The Commission notes that, in addition to the ADF, other SROs such as NSX may eventually offer ECNs an order delivery quote functionality.[132] NSX, in response to Nasdaq Response Letter IV,[133] stated that it intended to undertake a major trading system initiative to prepare itself for the market structure changes and growth in volume anticipated with the implementation of Regulation NMS.[134] This NSX statement is in accord with the Commission's belief that efforts to improve the national market system via technological innovations is, and will continue to be, a market-wide phenomenon that will ultimately ensure that ECNs have a variety of viable options not only from a regulatory perspective, but from an operational and business perspective as well.

Accordingly, the Commission continues to encourage the innovation of the NASD ADF, SRO facilities, ECNs, and market participants in general that would enhance participation and interaction between markets and order flow within the national market system. Nonetheless, the Commission also believes that Nasdaq must have the flexibility to rework its structure to permit appropriate responses to the rapidly changing marketplace. Congress noted that the Commission should seek to ''enhance competition and to allow economic forces, interacting with a fair regulatory field, to arrive at appropriate variation in practices and services.'' [135] In the Commission's view, as an exchange in competition with other markets, Nasdaq has the right to seek a more efficient model of doing business. While ECNs may desire certain functionality accommodating their current mode of participating in the Nasdaq market, Nasdaq, like other exchanges and market participants, must be permitted to innovate and adjust to the dynamic nature of today's securities industry, within the requirements of the Act.

The Commission recognizes that ECNs as a group have been among the most innovative market participants in recent years, introducing a number of novel trading tools and strategies. In addition, ECNs have benefited investors by providing cheaper and faster access to valuable liquidity. However, the Commission does not believe that the elimination of Nasdaq's order delivery functionality must or should necessarily have a deleterious impact on ECNs or the national market system as a whole.

b. *Nasdaq's Position as SRO.* Some of the commenters contended that this proposal is an attempt by Nasdaq to use its position as an SRO and as a for-profit entity to ''crush'' its ECN competition.[136] Specifically, some commenters aver that Nasdaq's acquisitions of the Brut and INET ECNs set this strategy in motion and this proposal would enable Nasdaq to ''perfect its monopoly.'' Bloomberg, in its second comment letter, asserted that Nasdaq seeks to eliminate the order delivery functionality for independent ECNs ''while preserving it for Nasdaq's own ECN facilities,'' namely Brut and INET, thereby giving its own ECNs a competitive advantage.[137] However, the Commission notes that under this proposal Nasdaq would integrate the Brut and INET execution systems with the Nasdaq Market Center, utilizing the INET platform; only Brut's broker-dealer routing functionality would continue upon the unification of the three trading platforms. Thus, this proposal could not advantage Nasdaq-affiliated ECNs over other ECNs because Nasdaq-affiliated ECNs would not exist. In addition, the Commission notes that Nasdaq's acquisitions of Brut and INET were reviewed and approved by the Commission as positive developments in the ever-changing, dynamic market environment.[138]

The Commission agrees with Nasdaq's statement that there is no explicit requirement in the Act for a national securities exchange to offer order delivery participation in their execution systems.[139] The Commission does not believe that Nasdaq must continue to offer order delivery functionality to meet its obligations in the Act and the rules and regulations thereunder. Although the order delivery functionality has been a part of Nasdaq's trading platform, the Commission does not believe Nasdaq is required to retain the functionality going forward, particularly given the legitimate regulatory reasons for its discontinuation provided by Nasdaq

[131] *See* Securities Exchange Act Release No. 51808 (June 9, 2005), 70 FR 37496, 37542 (June 29, 2005).

[132] Bloomberg also questioned the viability of NSX as a potential venue alternative to Nasdaq due primarily to a lack of system capacity. *See* Bloomberg Comment Letter III at 2–3.

[133] *See supra* note 82.

[134] Specifically, NSX stated that it intends to implement a new state-of-the-art trading system, ''NSX Blade,'' that would increase its systems capacity ten-fold and ''establish a new standard for speed in the securities industry.'' NSX stated that broker-dealers would be able to connect to its system ''through industry-standard FIX protocol or connect through any of the major extranets.'' Thus, NSX has represented that it intends to address the capacity and linkage concerns which Bloomberg believes make NSX an inadequate venue alternative to the Nasdaq Market Center. *See* NSX Comment Letter at 2.

[135] *See* S. Rep. No. 94–75, 94th Cong., 1st Sess. 7 (1975) at 8.

[136] *See, e.g.*, Track Comment Letter I at 1; and Bloomberg Comment Letter II at 1, 5, 8.

[137] Bloomberg Comment Letter II at 1.

[138] *See* Securities Exchange Act Release Nos. 51326 (March 7, 2005), 70 FR 12521 (March 14, 2005) and 52902 (December 7, 2005), 70 FR 73810 (December 13, 2005).

[139] Nasdaq Response Letter at 2.

including that the functionality could pose significant risks and costs.

In addition, Nasdaq endured significant cost in 2005 to acquire INET [140] and, through the Single Book Proposal, Nasdaq seeks to use the INET platform as the basis for its Integrated System going forward in order to provide a faster and more efficient system with greater capacity. As competition increases both in the United States and globally, and with the Commission's approval of Regulation NMS, nearly all national securities exchanges are in the process of transforming their systems to better compete. Through implementation of its Single Book Proposal, Nasdaq seeks to maximize the advantages of the INET trading platform—faster executions and increased certainty.

As Nasdaq prepares to commence operations as a national securities exchange, the Commission believes that providing order delivery functionality is not required of Nasdaq, as with any other exchange. If another exchange deems such functionality to be advantageous for its operation as an exchange, it may choose to add it. Notwithstanding the valuable contributions that ECNs bring to the national market system in terms of liquidity and innovation, the Commission does not believe that the Act requires the Nasdaq exchange to continue to separately provide functionality to accommodate the particularized business choices of the ECN participants.

2. Claims of Unfair Discrimination

Some of the commenters assert that the elimination of the order delivery functionality in the proposed rule change, as amended, is inconsistent with Section 6(b)(5) of the Act because it would discriminate unfairly against independent ECNs vis-à-vis all other Nasdaq members and it would not promote a free and open market and a national market system.[141] The Commission disagrees. ECNs have been the only Nasdaq participants with the option to use the Nasdaq order delivery service; all other Nasdaq market participants, *i.e.*, market makers, order entry firms, and UTP Exchanges, are currently required to accept automatic executions. Nasdaq has also maintained other features of its market exclusively for the benefit of ECNs (*e.g.*, the ability to charge quote access fees.) While the Commission approved these ''ECN-friendly'' measures and found them to be consistent with the Act, these same provisions were never imposed upon Nasdaq by the Commission or deemed to be requirements under the Act.

During its development as a quote facility of the NASD, Nasdaq had taken a series of actions to accommodate ECN participation and their particularized business model. In certain respects, ECNs have enjoyed a privileged status in the Nasdaq market compared to agency brokers and market maker participants by virtue of their ability to, amongst other things, accept order delivery instead of automatic execution. The Commission does not believe that, in removing the order delivery functionality, the instant proposal would result in unfair discrimination between customers, issuers, brokers, or dealers. Because Nasdaq has previously accommodated ECNs, changing features such as the order delivery function will necessarily impact ECNs disproportionately. However, the Commission disagrees with the suggestion that it logically follows that such disproportionate impact is per se equivalent to unfair discrimination under the Act. In this case, the Commission believes the proposed rule change is consistent with the Act and it does not unfairly discriminate between ECNs and other Nasdaq market participants. Nasdaq is eliminating a disparate treatment between ECNs and the other Nasdaq market participants by requiring that all participants accept automatic execution to increase the efficiency and competitiveness of the Nasdaq exchange.

3. Automatic Execution Function

The Commission notes that in numerous instances it has approved automatic execution within the national market system in general, and Nasdaq in particular. For instance, in the SuperMontage Order, the Commission affirmed that automatic execution is a reasonable way for Nasdaq to improve market efficiency and provide many benefits to a marketplace, particularly speed and certainty of executions.[142] The SuperMontage Order said that automatic execution also would promote investor confidence by increasing the likelihood that orders of moderate size from large and small investors alike will be filled almost instantaneously, improve the accuracy of Nasdaq's pricing systems, promote the timeliness of trade reporting, and help alleviate locked and crossed markets.[143] Most recently, in approving Rule 611 of Regulation NMS, the Commission clearly enunciated a view that automated markets and automated quotes (*i.e.*, automatic execution functionality), combined with access to such markets and quotes was an important attribute in a national market system.[144]

To this end, Rule 611 of Regulation NMS only protects from trade-throughs automated quotations of automated markets. An automated quotation is a quotation that, among other things, is displayed and is immediately accessible through automatic execution, and that immediately and automatically cancels any unexecuted portion of an order marked as immediate-or-cancel without routing the order elsewhere.[145] In Question 5 of the Division's NMS FAQs, the Division said that an SRO trading facility that displays the quotations of order delivery ECNs can meet the requirements of the definition of an automated quotation only if such quotations are closely integrated within the SRO trading facility.[146] In its comment letter, Bloomberg asserted that Nasdaq's interpretation of the response to Question 5 of the Division's NMS FAQs was wrong, in that the Division did ''not authorize Nasdaq to drop order delivery without considering the factors the Division cited.'' [147] The Commission believes that Bloomberg has misinterpreted the Division's response to Question 5. The response does not address an exchange dropping its order delivery functionality. Instead, the response relates to whether a market supporting order delivery could be considered ''automated,'' and if its quote could be ''protected'' under Regulation NMS. The Division's answer is intended to clarify how a market would comply with Regulation NMS and does not control whether Nasdaq keeps or discards its order delivery functionality.

[140] In its third comment response letter, Nasdaq stated that it spent close to $1 billion in 2005 to acquire INET from Reuters. Nasdaq Response Letter III at 3.

[141] Bloomberg Comment Letter II at 10.

[142] SuperMontage Order at 8049.

[143] SuperMontage Order at 8049–50.

[144] *See* Securities Exchange Act Release No. 51808 (June 9, 2005), 70 FR 37496 (June 29, 2005).

[145] Rule 600(b)(3) of Regulation NMS defines an automated quotation to mean a ''quotation displayed by a trading center that: (i) Permits an incoming order to be marked as immediate-or-cancel; (ii) immediately and automatically executes an order marked as immediate-or-cancel against the displayed quotation up to its full size; (iii) immediately and automatically cancels any unexecuted portion of an order marked as immediate-or-cancel without routing the order elsewhere; (iv) immediately and automatically transmits a response to the sender of an order marked as immediate-or-cancel indicating the action taken with respect to such order; and (v) immediately and automatically displays information that updates the displayed quotation to reflect any change to its material terms. 17 CFR 242.600(b)(3).

[146] NMS FAQs at Question 5.

[147] Bloomberg Comment Letter II at 7.

4. Implementation Date

In Bloomberg Comment Letter III, Bloomberg stated that it and other order delivery ECNs had been led by Nasdaq to believe that the Nasdaq Market Center's order delivery functionality would be available until at least fall of 2006 at the earliest, if not on an ongoing basis.[148] Bloomberg requested that, should the Commission decide to approve the Single Book Proposal, the Commission delay the effective date of the rules to provide ECNs an opportunity to migrate to another venue.[149] The USCC also encouraged the Commission to, as a matter of good process, ''consider the need for appropriate transition periods'' should the proposed rule change be adopted.[150] Similarly, Track requested a phased-in approach to the rules should they be adopted.[151] In response to commenter concerns and in order to provide ECNs with adequate time to program their systems for participation in Nasdaq or migration to another venue,[152] Nasdaq has agreed to delay its implementation and roll-out of the Single Book Proposal until August 28, 2006.[153]

In the Commission's approval of Nasdaq's exchange application in January 2006, the Commission emphasized that Nasdaq's approval was based on a set of rules with price/time priority.[154] In addition, the Commission noted in the Exchange Application Order that the two ECNs that Nasdaq had recently acquired—Brut and INET—both applied rules that required their orders to be executed in price/time priority.[155] As discussed above, the Single Book concept of integrating the three Nasdaq Facilities was discussed by the Commission in the Exchange Application Order and the Commission believed that such an integration would be beneficial, though the Commission permitted the three Nasdaq Facilities to operate separately for a temporary period, until September 30, 2006, because the Brut and INET facilities had only been recently acquired by Nasdaq.

The Commission notes that Nasdaq, independent of its exchange application and as a NASD subsidiary at the time, had already proposed to integrate its three facilities by September 30, 2006 in its filing to establish the rules governing the operation of its INET System.[156] In the INET Order the Commission approved Nasdaq's proposed commitment to integrate as of September 30, 2006;[157] however, that date was not mandated by the Commission. In addition, the plain language of the INET Order, NASD Rule 49545(b)(2), and the Exchange Application Order makes clear that September 30, 2006 was the latest date that Nasdaq, pursuant to its commitment, could integrate its trading facilities. Neither the INET Order nor the Exchange Application Order required that integration be delayed until September 30, 2006, or prohibited Nasdaq integrating its systems at an earlier date.

The Commission believes that astute market participants, such as Bloomberg, could have reasonably anticipated the strong possibility of Nasdaq operating on an automatic-execution only basis prior to September 30, 2006, based on: (1) Nasdaq's anticipated operation as an exchange with executions based on price-time priority for all of Nasdaq's order flow, (2) Nasdaq's acquisition of Brut and INET, both of which are automatic-execution facilities, and (3) Regulation NMS where the Commission clearly enunciated a view that automated markets and automated quotes (*i.e.*, automatic execution functionality), combined with access to such markets and quotes was an important attribute in a national market system.

In addition, formal notice of Nasdaq's intention to create an Integrated System based on automatic executions prior to September 30, 2006 was clearly given on February 7, 2006, the day Nasdaq filed the Single Book Proposal with the Commission. At that time, Nasdaq proposed to commence operation of the Integrated System by as early as May 2006. Bloomberg submitted an initial comment letter opposing the proposed rule change dated March 6, 2006, which suggested that it would take three to six months to complete the systems work required to adapt to a new venue.[158] The Commission understands that BATS has already made and implemented its plans to migrate its liquidity to NSX.[159] In addition, in response to comments for a transitional phase-in period,[160] Nasdaq has proposed to commence its phased-in implementation of the Integrated System based on automatic executions on August 28, 2006;[161] which is almost seven months after the proposal was filed, and nearly six months since Bloomberg's initial comment letter. The Commission believes that order delivery ECNs have had sufficient time to make alternate plans for quoting in the ADF or another SRO.

Section 19(b)(1) of the Act[162] requires a SRO to the file with the Commission ''any proposed rule change in, addition to, or deletion from the rules of such self-regulatory organization * * * accompanied by a concise general statement of the basis and purpose of such proposed rule change. Such proposed rule change must be filed in accordance with the requirements of Rule 19b–4 under the Act.[163] The Commission believes that Nasdaq has filed the Single Book Proposal in accordance with the requirements of the Act and its rules and regulations thereunder.

The Commission believes that Nasdaq has met all of the procedural requirements for the instant proposed rule change and provided the public in general and interested parties in particular with adequate notice and opportunity to comment under the Act. The Commission believes that the Integrated System will promote competition and bring investors and the national market system benefits through the efficiencies and transparencies brought about through a single liquidity pool with price/time priority. The Commission believes that, given the notice provided by Nasdaq's filings, it is consistent with the Act for Nasdaq to implement the Integrated System as proposed.

B. Operation as a National Securities Exchange

The Commission notes that, under the Single Book Proposal, Nasdaq's trading platform would have an integrated quote/order book operated in accordance with a unified price/time priority execution algorithm. In the Exchange Application Order, the Commission acknowledged that, because of the recent nature of Nasdaq's Brut and INET acquisitions and because

[148] Bloomberg Comment Letter III at 8–11.

[149] Bloomberg Comment Letter II at 11; *see also* Bloomberg Comment Letter III at 11.

[150] *See* USCC Comment Letter at 1–2.

[151] Track Comment Letter I at 2.

[152] *See* Bloomberg Comment Letter II at 11; Bloomberg Comment Letter III at 11; USCC Comment Letter at 1–2; and Track Comment Letter I at 2.

[153] *See* Amendment No. 3.

[154] Exchange Application Order at 3558–59.

[155] Exchange Application Order at 3558, note 137. *See also* Securities Exchange Act Release Nos. 52902 (December 7, 2005), 70 FR 73810 (December 13, 2005) (''INET Order'') and 51326 (March 7, 2005), 70 FR 12521 (March 14, 2005) (''Brut Order'').

[156] *See* Securities Exchange Act Release No. 52723 (November 2, 2005), 70 FR 67513 (November 7, 2005)(''INET Notice'').

[157] *See* INET Order at 73811.

[158] Bloomberg Comment Letter I at 11.

[159] *See* Nasdaq Response Letter II.

[160] *See* Track Comment Letter I at 2; USCC Comment Letter at 1–2; and Bloomberg Comment Letter IV at 1.

[161] *See* Amendment No. 3.

[162] 15 U.S.C. 78s(b)(1).

[163] 17 CFR 240.19b–4.

of the reliance by participants on the continued availability of those ATSs, it was in the public interest for Brut and INET to be available for a limited period while Nasdaq worked to integrate them with its NMC Facility.[164] The Commission stated that ''it is beneficial for orders in the same securities directed to an exchange to interact with each other'' and that ''[s]uch interaction promotes efficient exchange trading and protects investors by assuring that orders are executed pursuant to a single set of priority rules that are consistently and fairly applied.'' [165] The Commission permitted the Exchange to operate three separate trading platforms—namely the NMC Facility, Brut Facility, and INET Facility—for a temporary period prior to September 30, 2006. This proposed rule change, as amended, would enable Nasdaq to satisfy its Commission-approved commitment to integrate its three trading facilities prior to September 30, 2006.

In addition, Nasdaq's Single Book Proposal will allow the Exchange to program its system to operate in compliance with the Exchange Application Order in additional ways. For example, the Integrated System would not accept reports of transactions occurring outside the Integrated System, would interact with the network processors for the various national market system plans in compliance with Commission rules governing exchanges, and would fulfill Nasdaq's new role as an exchange in the national market system plans, including the national market system plan governing the Intermarket Trading System (''ITS Plan''). In addition, under the Single Book Proposal, Nasdaq itself (rather than its individual members) would be bound by the obligations of the ITS Plan, maintain a single two-sided quotation, and be responsible for trade-through compliance. The Commission notes that the proposed rules change, as amended, cannot be operational until Nasdaq has satisfied all the conditions set forth by the Commission in the Exchange Application Order.[166]

C. Regulation NMS

The Commission believes that the proposed rule change should allow Nasdaq to comply with the requirements of Regulation NMS.[167] In proposed Nasdaq Rule 4613(e), Nasdaq proposes to adopt a rule with regard to locked and crossed markets. The Exchange has also designed its proposed Book Processing [168] and Order Routing [169] rules to comply with the requirements of Regulation NMS. These proposed rules include permitting users to designate orders meeting the requirements of Rule 600(b)(30) of Regulation NMS [170] as intermarket sweep orders, which would allow orders so designated to be automatically matched and executed without reference to protected quotations at other trading centers.

In addition, Nasdaq has proposed to implement routing options that its believes are consistent with Rules 610 and 611 of Regulation NMS. Nasdaq also proposed rules intended to ensure its compliance with Rule 612 of Regulation NMS (*i.e.*, accepting sub-penny prices in $0.0001 increments for securities priced less than $1.00 a share and rejecting orders in sub-penny increments for securities priced $1.00 or more per share).[171] The Commission also notes that proposed Nasdaq Rule 4756(c)(4) addresses situations where Nasdaq has reason to believe it is not capable of displaying automated quotations, including adopting policies and procedures for communicating to both its members and other trading centers about such a situation, as well as receiving and responding to notices of other trading centers electing the ''self-help'' exception under Rule 611(b)(1) of Regulation NMS.

D. Other Rules

The proposed rule change, as amended, would merge five current sets of rules (the 4600, 4700, 4900, 4950, and 5200 Series) into two (the 4600 and 4750 Series), with the proposed 4600 Series governing System participants and the proposed 4750 Series governing the operation of the Integrated System. In addition to reorganizing the rule set, and making changes to the Exchange's rules for exchange and Regulation NMS readiness, the proposed rule change, as amended, addresses, among other things, openings and closings, the order display/matching system, order types, time in force designations, anonymity, routing, book processing, adjustment of open orders, and Nasdaq's proposed phase-in plan for the proposed rules.

E. Impact on Efficiency, Competition, and Capital Formation

Section 3(f) of the Act requires that the Commission consider whether Nasdaq's proposal will promote efficiency, competition, and capital formation.[172] As discussed in more detail above, the Commission has carefully considered whether the proposal will promote efficiency, competition and capital formation and has concluded that the Single Book Proposal should encourage competition and should not impede the development of other trading systems or market innovation. The Commission believes that the Single Book Proposal is an appropriate undertaking by Nasdaq to enhance the quality of its market by providing more information to investors, promoting greater efficiency in executions, and increasing overall market transparency. While the Single Book Proposal should provide a central means for accessing liquidity in Nasdaq and non-Nasdaq stocks, it does not represent an exclusive means, nor does it prevent broker-dealers from seeking alternative order routing and execution services. In addition, the Commission believes that the proposal should promote competition and capital formation by providing its market participants with several quote and order management options (*e.g.*, Discretionary Orders, Reserve Orders, Pegged Orders, and Minimum Quantity Order), including order types which will enable market participants to operate in the post-Regulation NMS trading environment, such as Intermarket Sweep Orders, Price to Comply Orders, and Price to Comply Post Orders.

F. Accelerated Approval of Amendment Nos. 2 and 3

As set forth below, the Commission finds good cause to approve Amendment Nos. 2 and 3 to the proposed rule change, as amended, prior to the thirtieth day after the amendments are published for comment in the **Federal Register** pursuant to Section 19(b)(2) of the Act.

In Amendment No. 2, Nasdaq modifies the proposed rule language to reflect the Commission's extension of certain compliance dates relating to Regulation NMS. Specifically, Nasdaq is modifying proposed rules to reflect that such rules would not become effective until the applicable Regulation NMS implementation date of May 21, 2007. Such rules include Rule 4613(e) (pertaining to locked and crossed markets), Rule 4751(f) (pertaining to order types), and Rule 4755 (pertaining to intermarket sweep orders). The Commission finds good cause to accelerate approval of these changes prior to the thirtieth day after

[164] *Id* at 3559.

[165] *Id.*

[166] Exchange Application Order at 3566.

[167] *See supra* note 6.

[168] *See* proposed Nasdaq Rule 4757.

[169] *See* proposed Nasdaq Rule 4758.

[170] 17 CFR 242.600(b)(30).

[171] Single Book Proposal at 19592. *See also* proposed Nasdaq Rule 4613(a)(1)(B).

[172] 15 U.S.C. 78c(f).

publication in the **Federal Register**. The Commission believes this is a reasonable approach in light of the extension of Regulation NMS compliance dates and should help to ensure that the appropriate Nasdaq rules are in place at the time that Regulation NMS compliance is required.

In Amendment No. 2, Nasdaq also is making several technical corrections to the proposed rule change, for example, eliminating typographical and underlining errors. These changes are non-substantive and technical in nature and are necessary to clarify the proposal. The Commission finds good cause to accelerate approval of these changes prior to the thirtieth day after publication in the **Federal Register** because they better clarify Nasdaq's rules, which should assist members' ability to comply with their requirements, and assist investors in understanding their application and scope.

In Amendment No. 3, in response to the comments filed by the U.S. Chamber of Commerce, Bloomberg, and others, Nasdaq proposes to commence a phased-in implementation of the Integrated System on August 28, 2006.[173] In addition, Amendment No. 3 describes Nasdaq's plan to test securities on the System during July and early August 2006 and phase-in the operation of the Integrated System with an initial three-week transition period for Nasdaq-listed stocks, followed by non-Nasdaq-listed stocks.

The Commission finds good cause to accelerate approval of this change prior to the thirtieth day after publication in the **Federal Register**. The Commission finds that the change in the proposed implementation of the Integrated System to a later date than that originally proposed and published for comment and later than that proposed by Amendment No. 2, as well as the allowance of a testing period and phased-in period, would provide a longer transition period for Nasdaq market participants and other participants in the national market system. The delay until August 28, 2006 and the phase-in period should help to ensure that there is an orderly transition to the Integrated System and provide Nasdaq's market participants, including many of the commenters, opportunity to decide whether to continue participating in Nasdaq, or to elect to move their business elsewhere. The Commission notes that August 28, 2006 represents a period of nearly seven months from the original filing date of this proposed rule change. The Commission also notes that, notwithstanding Nasdaq's proposed August 28, 2006 implementation date, the proposed rules change, as amended, cannot be operational until Nasdaq has satisfied all the conditions set forth by the Commission in the Exchange Application Order.[174] The Commission believes that August 28, 2006 should provide market participants with adequate time to prepare for the Implemented System, and would also permit Nasdaq to meet its commitment to fully integrate its three trading facilities on or before September 30, 2006.

VII. Conclusion

It is therefore ordered, pursuant to Section 19(b)(2) of the Act,[175] that the proposed rule change (File No. SR–NASDAQ–2006–001), as amended by Amendment Nos. 1, 2, and 3, be, and hereby is, approved.

By the Commission.

Nancy M. Morris,

Secretary.

[FR Doc. 06–6366 Filed 7–19–06; 8:45 am]

BILLING CODE 8010–01–P

[173] The Commission notes that Amendment No. 3 replaces the August 14, 2006 implementation date that Nasdaq had proposed in Amendment No. 2.

[174] Exchange Application Order at 3566. The Commission recently modified the requirements for Nasdaq's operation as an exchange. *See* Securities Exchange Act Release No. 54085 (June 30, 2006), 71 FR 38910 (July 10, 2006).

[175] 15 U.S.C. 78s(b)(2).

SECURITIES AND EXCHANGE COMMISSION

[Release No. 34–54130; File No. SR–NYSEArca–2006–20]

Self-Regulatory Organizations; NYSE Arca, Inc.; Notice of Filing of a Proposed Rule Change Relating to Schedule of Fees and Charges

July 11, 2006.

Pursuant to Section 19(b)(1) of the Securities Exchange Act of 1934 (''Act'')[1] and Rule 19b–4 thereunder,[2] notice is hereby given that on May 17, 2006, NYSE Arca, Inc. (''NYSE Arca'' or ''Exchange'') filed with the Securities and Exchange Commission (''Commission'') the proposed rule change as described in Items I, II, and III below, which Items have been prepared by the Exchange. On May 26, 2006, the Exchange filed Amendment No. 1 to the proposed rule change. On June 30, 2006, the Exchange filed Amendment No. 2 to the proposed rule change. On July 7, 2006, the Exchange filed Amendment No. 3 to the proposed rule change.[3] The Commission is publishing this notice to solicit comments on the proposed rule change, as amended, from interested persons.

I. Self-Regulatory Organization's Statement of the Terms of Substance of the Proposed Rule Change

The Exchange proposes to amend the Trade Related Charges section of the Schedule of Fees and Charges (''Schedule''). The text of the proposed fee schedule is available on the NYSE Arca's Web site *http://www.archipelago.com*, at the NYSE Arca's Office of the Secretary, and at the Commission's Public Reference Room.

II. Self-Regulatory Organization's Statement of the Purpose of, and Statutory Basis for, the Proposed Rule Change

In its filing with the Commission, the Exchange included statements concerning the purpose of, and basis for, the proposed rule change and discussed any comments it received on the proposed rule change, as amended. The text of these statements may be examined at the places specified in Item IV below. The NYSE Arca has prepared summaries, set forth in Sections A, B, and C below, of the most significant aspects of such statements.

A. Self-Regulatory Organization's Statement of the Purpose of, and Statutory Basis for, the Proposed Rule Change

1. Purpose

The purpose of the proposed rule change, as amended, is to amend the Trade Related Charges section of the Schedule. NYSE Arca proposes to combine two existing fees associated with Linkage Orders.[4] The Exchange also proposes to add additional language to footnotes 4 and 5 of the Trade Related Charges section of the Schedule in order to explain that the existing Broker Dealer Surcharge also applies to Linkage Orders.

Presently orders received via the Linkage, other than Satisfaction Orders, are assessed a $0.21 transaction fee and

[1] 15 U.S.C. 78s(b)(1).

[2] 17 CFR 240.19b–4.

[3] *See* Form 19b–4 dated July 7, 2006 (''Amendment No. 3''). Amendment No. 3 replaced the original filing and Amendment Nos. 1 and 2 in their entirety.

[4] Linkage Orders are orders that are routed through the Intermarket Linkage System (''Linkage'') as permitted under the Plan for the Purpose of Creating and Operating an Intermarket Option Linkage. *See* Securities Exchange Act Release No. 43086 (July 28, 2000), 65 FR 48023 (August 4, 2000).

a $0.05 comparison fee.[5] Since all applicable Linkage Orders are charged both fees in all instances, to simplify the Schedule, the Exchange is proposing combining the fees into one transaction fee of $0.26. While the published rate schedule will appear different than it presently does, this proposed change does not affect the total fee the Exchange assesses for Linkage transactions. Changes made pursuant to the combining of the transaction fee and the comparison fee makes no substantive change to the Linkage Fee Pilot Program. This proposed change serves only to simplify of the Schedule.

NYSE Arca presently assesses a $0.25 per contract fee on Broker Dealer (''BD'') transactions occurring when BD orders are entered and executed electronically. Under the Linkage Fee Pilot Program, executions on NYSE Arca resulting from Linkage Orders are subject to the same billing treatment as other BD executions.[6] Subsequently, Linkage Orders that are entered and executed electronically are assessed the $0.25 BD Surcharge per contract on those executions.[7] NYSE Arca proposes to add a reference to the BD Surcharge in the existing footnote associated with Linkage Fees. The Exchange also proposes to add similar language to the footnote associated with the BD Surcharge in order to clarify that the surcharge will apply to Linkage Orders. The additional language in the footnotes associated with the BD Surcharge and Linkage Fees will serve to explain all costs that are associated with sending and executing Linkage Orders on NYSE Arca.

2. Statutory Basis

The Exchange believes that the proposal is consistent with Section 6(b) of the Act,[8] in general, and furthers the objectives of Section 6(b)(4) of the Act,[9] in particular, in that it provides for the equitable allocation of dues, fees and other charges among its members and other persons using its facilities for the purpose of executing Linkage Orders that are routed to the Exchange from other market centers.

B. Self-Regulatory Organization's Statement on Burden on Competition

The Exchange does not believe that the proposed rule change will impose any burden on competition that is not necessary or appropriate in furtherance of the purposes of the Act.

C. Self-Regulatory Organization's Statement on Comments on the Proposed Rule Change Received From Members, Participants, or Others

Written comments on the proposed rule change were neither solicited nor received.

III. Date of Effectiveness of the Proposed Rule Change and Timing for Commission Action

Within 35 days of the date of publication of this notice in the **Federal Register** or within such longer period (i) as the Commission may designate up to 90 days of such date if it finds such longer period to be appropriate and publishes its reasons for so finding or (ii) as to which the self-regulatory organization consents, the Commission will:

(A) By order approve such proposed rule change, or

(B) Institute proceedings to determine whether the proposed rule change should be disapproved.

IV. Solicitation of Comments

Interested persons are invited to submit written data, views, and arguments concerning the foregoing, including whether the proposed rule change is consistent with the Act. Comments may be submitted by any of the following methods:

Electronic Comments

- Use the Commission's Internet comment form (*http://www.sec.gov/rules/sro.shtml*); or
- Send an e-mail to *rule-comments@sec.gov*. Please include File Number SR–NYSEArca–2006–20 on the subject line.

Paper Comments

- Send paper comments in triplicate to Nancy M. Morris, Secretary, Securities and Exchange Commission, Station Place, 100 F Street, NE., Washington, DC 20549–1090.

All submissions should refer to File Number SR–NYSEArca–2006–20. This file number should be included on the subject line if e-mail is used. To help the Commission process and review your comments more efficiently, please use only one method. The Commission will post all comments on the Commission's Internet Web site (*http://www.sec.gov/rules/sro.shtml*). Copies of the submission, all subsequent amendments, all written statements with respect to the proposed rule change that are filed with the Commission, and all written communications relating to the proposed rule change between the Commission and any person, other than those that may be withheld from the public in accordance with the provisions of 5 U.S.C. 552, will be available for inspection and copying in the Commission's Public Reference Room. Copies of such filing also will be available for inspection and copying at the principal offices of the Exchange. All comments received will be posted without change; the Commission does not edit personal identifying information from submissions. You should submit only information that you wish to make available publicly. All submissions should refer to File Number SR–NYSEArca–2006–20 and should be submitted on or before August 10, 2006.

For the Commission, by the Division of Market Regulation, pursuant to delegated authority.[10]

J. Lynn Taylor,

Assistant Secretary.

[FR Doc. E6–11493 Filed 7–19–06; 8:45 am]

BILLING CODE 8010–01–P

[5] These fees are applicable through an Exchange Pilot Program due to expire on July 31, 2006. The Exchange intends to file for a one-year extension of the Pilot Program.

[6] *See* Securities Exchange Act Release No. 47786 (May 2, 2003), 68 FR 24779 (May 8, 2003) (order approving Linkage Fee Pilot Program).

[7] NYSE Arca acknowledges that it is in discussions with the Commission staff concerning the historical treatment of the BD Surcharge on Linkage Orders.

[8] 15 U.S.C. 78f(b).

[9] 15 U.S.C. 78f(b)(4).

[10] 17 CFR 200.30–3(a)(12).

DEPARTMENT OF STATE

[Delegation of Authority 294]

Delegation by the Secretary of State to the Under Secretary for Political Affairs of Authorities Normally Vested in the Deputy Secretary

By virtue of the authority vested in me as Secretary of State, including Section l of the State Department Basic Authorities Act, as amended (22 U.S.C. 2651a), I hereby delegate to the Under Secretary for Political Affairs, to the extent authorized by law, all authorities and functions vested in the Deputy Secretary of State, including all authorities and functions vested in the Secretary of State or the head of agency that have been or may be delegated or re-delegated to the Deputy Secretary.

Any authority or function covered by this delegation of authority may also be exercised by the Secretary of State.

Any act, executive order, regulation, or procedure subject to, or affected by, this delegation of authority shall be deemed to be such act, executive order, regulation, or procedure as amended from time to time.

This delegation of authority shall enter into force on July 8, 2006 and shall expire upon the appointment and entry upon duty of a new Deputy Secretary.

All existing delegations of authority now in effect, including any re-delegation of authority by the Deputy Secretary, shall remain in effect.

This delegation of authority shall be published in the **Federal Register**.

Condoleezza Rice,

Secretary of State, Department of State.

[FR Doc. E6–11557 Filed 7–19–06; 8:45 am]

BILLING CODE 4710–08–P

DEPARTMENT OF TRANSPORTATION

Federal Aviation Administration

Public Notice for Waiver of Aeronautical Land-Use Assurance, Cambridge Municipal Airport, Cambridge, OH

AGENCY: Federal Aviation Administration, DOT.

ACTION: Notice of intent of waiver with respect to land.

SUMMARY: The Federal Aviation Administration (FAA) is considering a proposal to change a portion of the airport from aeronautical use to non-aeronautical use and to authorize the release 4.105 acres of vacant airport property for an exchange of property between the Cambridge Area Regional Airport Authority and Dunning Investment Company, Ltd. The land was conveyed to the Cambridge Area Regional Airport Authority in Deed Volume 364, page 656 of the Recorder's Office, Guernsey County, Ohio. The land was acquired under FAA Project No. 3–39–0013–0303. There are no impacts to the airport by allowing the airport to dispose of the property. Approval does not constitute a commitment by the FAA to financially assist in the disposal of the subject airport property nor a determination of eligibility for grant-in-aid funding from the FAA. In exchange, the Cambridge Regional Airport Authority will receive a parcel of land adjacent to Cambridge Municipal Airport. This parcel is necessary to meet design standards for future airport development as indicated on the Airport Layout Plan for Cambridge Municipal Airport.

In accordance with section 47107(h) of title 49, United States Code, this notice is required to be published in the **Federal Register** 30 days before modifying the land-use assurance that requires the property to be used for an aeronautical purpose.

DATES: Comments must be received on or before August 21, 2006.

FOR FURTHER INFORMATION CONTACT: Melanie Laud, Program Manager, 11677 South Wayne Road, Suite 107, Romulus, Michigan 48174. Telephone Number (734) 229–2929/FAX Number (734) 229–2950. Documents reflecting this FAA action may be reviewed at this same location or at Cambridge Municipal Airport, Cambridge, Ohio.

SUPPLEMENTARY INFORMATION: Following is a legal description of the property located in Cambridge, Guernsey County, Ohio, and described as follows: Situated in Jackson Township, Guernsey County, Ohio and being 4.105 acres more or less in Military Lot #29, Township #1 North, Range #3 West in the United States Military Lands Survey and being more particularly described as follows: Commencing at an iron pin found at the Northwest corner of Military Lot #29, Thence with the west line of Military Lot #29 S 05°15′28″ W a distance of 514.25 feet to an iron pin found, the BEGINNING.

Thence with the lands of now or formerly Anne Stillion as found in Official Record Book 43 Page 1075 the following two (2) calls: 1. N 69°10′42″ E a distance of 185.03 feet to an iron pin found. 2. N 04°09′20″ E a distance of 164.76 feet to a P.K. Nail found.

Thence with the lands of now or formerly Dunning Investment Company, LTD as found in Official Record Book 184 Page 675 the following two (2) calls: 1. S 54°21′37″ E a distance of 343.67 feet to an iron pin found. 2. S 55°02′55″ E a distance of 129.55 feet to an iron pin set.

Thence with the lands of now or formerly Cambridge Area Regional Airport as found in Official Record Book 319 Page 732 S 36°20′31″ W a distance of 410.12 feet to an iron pin set.

Thence with the lands of now or formerly Cambridge Area Regional Airport as found in Official Record Book 384 Page 655 N 54°14′07″ W a distance of 418.18 feet to an iron pin set.

Thence with the lands of now or formerly Muskingum Area Technical College as found in Official Record Book 247 Page 889 N 05°15′28″ E a distance of 130.87 feet to the beginning and containing 4.105 acres more or less and being a part of the property conveyed to Cambridge Area Regional Airport as found in Official Record Book 384 Page 655.

Part of A.P. #11–02307.

Subject to a height restriction easement area that is 817 MSL and described as follows: Beginning at an iron pin found at Southeast corner of the above described property.

Thence N 54°14′07″ W a distance of 78.50 feet to an iron pin set.

Thence N 36°20′31″ E a distance of 409.01 feet to an iron pin set.

Thence S 55°02′55″ E a distance of 78.52 feet to an iron pin set.

Thence S 36°20′31″ W a distance of 410.12 feet to the beginning and containing 0.738 acres more or less. Subject to all easements or leases of public record. Bearings are magnetic and are for angle purpose only. Iron pins set are 5/8 inch rebar 30 inches long capped SPILKER LS–5862.

Dated: Issued in Romulus, Michigan on June 22, 2006.

Irene R. Porter,

Manager, Detroit Airports District Office, FAA, Great Lakes Region.

[FR Doc. 06–6379 Filed 7–19–06; 8:45 am]

BILLING CODE 4910–13–M

DEPARTMENT OF TRANSPORTATION

Federal Aviation Administration

Notice of Passenger Facility Charge (PFC) Approvals and Disapprovals

AGENCY: Federal Aviation Administration (FAA), DOT.

ACTION: Monthly Notice of PFC Approvals and Disapprovals. In June 2006, there were six applications approved. This notice also includes information on two applications, approved in May 2006, inadvertently left off the May 2006 notice. Additionally, five approved amendments to previously approved applications are listed.

SUMMARY: The FAA publishes a monthly notice, as appropriate, of PFC approvals and disapprovals under the provisions of the Aviation Safety and Capacity Expansion Act of 1990 (Title IX of the Omnibus Budget Reconciliation Act of 1990) (Pub. L. 101–508) and Part 158 of the Federal Aviation Regulations (14 CFR Part 158). This notice is published pursuant to paragraph d of § 158.29.

PFC Applications Approved

Public Agency: City of Atlanta, Georgia.

Application Number: 06–08–C–00–ATL.

Application Type: Impose and use a PFC.

PFC Level: $4.50.

Total PFC Revenue Approved in this Decision: $165,206,163.

Earliest Charge Effective Date: August 1, 2018.

Estimated Charge Expiration Date: August 1, 2019.

Class of Air Carriers not Required to Collect PFC'S:

Air taxi/commercial operators.

Determination: Approved. Based on information submitted in the public agency's application, the FAA has determined that the proposed class accounts for less than 1 percent of the total annual enplanements at Hartsfield-Jackson Atlanta International Airport.

Brief Description of Projects Approved for Collection and Use at a $4.50 PFC Level:

Site preparation for southside aircraft parking positions and taxiways.

Runway 8R/26L pavement replacement.

Brief Description of Projects Partially Approved for Collection and Use at a $4.50 PFC Level:

New airport safety/command and control center.

Determination: Partially approved. A portion of this project did not meet the requirements of § 158.15. Equipment and facilities used for day-to-day airport operations, such as dormitories and kitchenettes are not eligible in accordance with paragraph 603b(3) of FAA Order 5100.38C, Airport Improvement Program Handbook (June 28, 2005).

Runway safety area improvements.

Determination: Partially approved. PFC funding was limited to that portion of the project not funded by existing or planned Airport Improvement Program grants.

Decision Date: May 31, 2006.

FOR FURTHER INFORMATION CONTACT: Aimee McCormick, Atlanta Airports District Office, (404) 305–7143.

Public Agency: County of Outagamie, Appleton, Wisconsin.

Application Number: 06–06–C–00–ATW.

Application Type: Impose and use a PFC.

PFC Level: $4.50.

Total PFC Revenue Approved in this Decision: $4,717,500.

Earliest Charge Effective Date: September 1, 2008.

Estimated Charge Expiration Date: January 1, 2013.

Class of Air Carriers not Required to Collect PFC'S:

Air taxi/commercial operators.

Determination: Approved. Based on information submitted in the public agency's application, the FAA has determined that the proposed class accounts for less than 1 percent of the total annual enplanements at Outagamie County regional Airport.

Brief Description of Projects Approved for Collection and Use:

Perimeter service road.

Entrance access road.

PFC administration.

Decision Date: May 31, 2006.

FOR FURTHER INFORMATION CONTACT: Nancy Nistler, Minneapolis Airports district Office, (612) 713–4353.

Public Agency: Tucson Airport Authority, Tucson, Arizona.

Application Number: 06–02–C–00–TUS.

Application Type: Impose and use a PFC.

PFC Level: $4.50.

Total PFC Revenue Approved in this Decision: $44,194,512.

Earliest Charge Effective Date: April 1, 2013.

Estimated Charge Expiration Date: September 1, 2017.

Class of Air Carriers not Required to Collect PFC'S:

Nonscheduled/on-demand air carriers filing FAA Form 1800–31.

Determination: Approved. Based on information submitted in the public agency's application, the FAA has determined that the proposed class accounts for less than 1 percent of the total annual enplanements at Tucson International Airport.

Brief Description of Project Approved for Collection and Use:

Concourse renovation.

Decision Date: June 6, 2006.

FOR FURTHER INFORMATION CONTACT: Eric Vermeeren, Western Pacific Region Airports Division, (310) 725–3631.

Public Agency: Maryland Aviation Administration, Baltimore, Maryland.

Application Number: 06–05–C–00–BWI.

Application Type: Impose and use a PFC.

PFC Level: $4.50.

Total PFC Revenue Approved in this Decision: $206,833,000.

Earliest Charge Effective Date: June 1, 2011.

Estimated Charge Expiration Date: January 1, 2016.

Class of Air Carriers not Required to Collect PFC'S:

Nonscheduled/on-demand air carriers filing FAA Form 1800–31.

Determination: Approved. Based on information submitted in the public agency's application, the FAA has determined that the proposed class accounts for less than 1 percent of the total annual enplanements at Baltimore-Washington International Thurgood Marshall Airport.

Brief Description of Projects Approved for Collection and Use at a $4.50 PFC level:

Security enhancement program.

Concourses C/D and D/E apron rehabilitation.

Concourse B/C apron rehabilitation.

Airfield lighting and signage.

Perimeter security.

Terminal area D/E baggage handling system upgrades (design).

Taxiway rehabilitation program.

Brief Description of Projects Approved for Collection and use at a $3.00 PFC Level:

Terminal roadway resurfacing.

Equipment and safety training systems.

Communications equipment and infrastructure.

Snow removal equipment.

Glycol recovery vehicles.

Terminal baggage handling system renovations.

Glycol collection tank.

Brief Description of Projects Approved for Collection at a $4.50 PFC Level:

Terminal area D/E baggage handling system upgrades (construction).

Northwest quadrant perimeter service road.

Decision Date: June 9, 2006.

FOR FURTHER INFORMATION CONTACT: Luis Larte, Washington Airports District Office, (703) 661–1365.

Public Agency: County of Montrose, Montrose, Colorado.

Application Number: 06–03–C–MTJ.

Application Type: Impose and use a PFC.

PFC Level: $4.50.

Total PFC Revenue Approved in this Decision: $472.479.

Earliest Charge Effective Date: August 1, 2006.

Estimated Charge Expiration Date: February 1, 2008.

Class of Air Carriers not Required to Collect PFC'S:

Air taxi/commercial operators filing FAA Form 1800–31.

Determination: Approved. Based on information submitted in the public agency's application, the FAA has determined that the proposed class accounts for less than 1 percent of the total annual enplanements at Montrose Regional Airport.

Brief Description of Projects Approved for Collection and Use:

Update airport master plan.

Construct portion of taxiway alpha.

Construct taxiway B4/C.

Expand terminal apron.

Update airport master plan phase II.

Acquire two pieces of snow removal equipment.

Relocate taxiway B.

Decision Date: June 15, 2006.

FOR FURTHER INFORMATION CONTACT: Chris Schaffer, Denver Airports District Office, (303) 342–1258.

Public Agency: City of San Angelo, Texas.

Application Number: 06–07–C–00–SJT.

Application Type: Impose and use a PFC.

PFC Level: $4.50.

Total PFC Revenue Approved in this Decision: $1,568,947.

Earliest Charge Effective Date: November 1, 2006.

Estimated Charge Expiration Date: September 1, 2012.

Class of Air Carriers not Required to Collect PFC'S:

Air taxi/commercial operators filing FAA Form 1800–31.

Determination: Approved. Based on information submitted in the public agency's application, the FAA has determined that the proposed class accounts for less than 1 percent of the total annual enplanements at San Angelo Regional Airport/Mathis Field.

Brief Description of Projects Approved for Collection and Use:

Rehabilitate runway 18/36.

Rehabilitate taxiways A, B and H lighting systems.

Rehabilitate runway 9/27 lighting system.

Apron rehabilitation.

Terminal seating.

Decision Date: June 19, 2006.

FOR FURTHER INFORMATION CONTACT: Marcelino Sanchez, Southwest Region Airports Division, (817) 222–5652.

Public Agency: County of Eau Claire, Eau Claire, Wisconsin.

Application Number: 06–02–C–00–EAU.

Application Type: Impose and use a PFC.

PFC Level: $4.50.

Total PFC Revenue Approved in this Decision: $662,411.

Earliest Charge Effective Date: August 1, 2006.

Estimated Charge Expiration Date: May 1, 2014.

Class of Air Carriers not Required to Collect PFC'S:

Air taxi/commercial operators.

Determination: Approved. Based on information submitted in the public agency's application, the FAA has determined that the proposed class accounts for less than 1 percent of the total annual enplanements at Chippewa Valley regional Airport.

Brief Description of Projects Approved for Collection and Use:

Ramp reconstruction.

Runway 14/32 design.

Runway 14/32 reconstruction.

Runway 4 holding bay construction.

Taxiway A2 construction.

Connector taxiway construction.

Taxilane and ramp construction.

Land for hanger area expansion.

Runway 4/22 safety area improvements.

Land acquisition for runway 4/22 extension.

Aircraft rescue and firefighting vehicle.

Connector taxiway for taxiways A and B.

Runway 4/22 rehabilitation.

Land acquisition for future development.

PFC application.

Decision Date: June 19, 2006.

FOR FURTHER INFORMATION CONTACT: Nancy Nistler, Minneapolis Airports District Office, (612) 713–4353.

Public Agency: City of Albuquerque, New Mexico.

Application Number: 06–03–C–00–ABQ.

Application Type: Impose and use a PFC.

PFC Level: $3.00.

Total PFC Revenue Approved in this Decision: $66,066,726.

Earliest Charge Effective Date: December 1, 2007.

Class of Air Carriers not Required to Collect PFC'S:

Air taxi/commercial operators filing FAA Form 1800–31.

Determination: Approved. Based on information submitted in the public agency's application, the FAA has determined that the proposed class accounts for less than 1 percent of the total annual enplanements at Albuquerque International Sunport.

Brief Description of Projects Approved for Collection and Use:

Runway 3/21 extension.

Terminal apron rehabilitation.

Expand communications center and equipment.

Upgrade flight information display system.

Public space (terminal) capacity enhancement.

Terminal mechanical/electrical/fire safety upgrades.

Construct customs/federal inspection station.

Expand passenger screening checkpoint.

Restructure Spirit Drive.

PFC application administrative costs.

Brief Description of Project Disapproved for Collection and Use:

Extend University Drive.

Determination: This project does not meet the requirements of § 158.15. This roadway does not exclusively serve airport traffic, therefore it is not eligible in accordance with paragraph 620a(3) of FAA Order 5100.38C, Airport Improvement Program Handbook (June 28, 2005).

Decision Date: June 26, 2006.

FOR FURTHER INFORMATION CONTACT: Andy Velayos, Southwest region Airports Division, (817) 222–5647.

Amendments to PFC Approvals

Amendment No. city, state	Amendment approved date	Original approved net PFC revenue	Amended approved net PFC revenue	Original estimated charge exp. date	Amended estimated charge exp. date
05–12–C–01–MKE, Milwaukee, WI	05/16/06	$242,364	$260,614	06/01/18	05/01/18
00–06–C–04–MKE, Milwaukee, WI	06/08/06	123,240,672	130,460,739	11/01/14	02/01/14
02–07–C–03–MKE, Milwaukee, WI	06/08/06	35,205,833	38,807,888	11/01/17	03/01/17
04–10–C–01–MKE, Milwaukee, WI	06/08/06	11,000,601	11,775,601	05/01/18	04/01/18
01–08–C–01–PDX, Portland, OR	06/16/06	551,029,000	551,129,000	05/01/16	05/01/16

Issued in Washington, DC, on July 17, 2006.

Joe Hebert,

Manager, Financial Analysis and Passenger Facility Charge Branch.

[FR Doc. 06–6378 Filed 7–19–06; 8:45 am]

BILLING CODE 4910–13–M

DEPARTMENT OF TRANSPORTATION

Federal Aviation Administration

[Docket No. FAA–2004–19058; FAA Order 5050.4B]

National Environmental Policy Act (NEPA) Implementing Instructions for Airport Actions

AGENCY: Federal Aviation Administration, DOT.

ACTION: Notice of Minor Changes to Order 5050.4B.

SUMMARY: On April 28, 2006, the Federal Aviation Administration's Office of Airports (ARP) issued a Notice of Availability for Order 5050.4B, *National Environmental Policy Act (NEPA) Implementing Instructions for Airport Actions* (71 FR 25279). Today's Notice alerts interested parties that ARP has posted an edited version of the Order at: *http://www.faa.gov/airports_airtraffic/airports/resources/publications/orders/environmental_5050_4/.* The newly posted Order corrects minor grammatical and spelling errors and incorrect paragraph citations present in the Order issued on April 28, 2006. The revisions do not change the Order's content.

FOR FURTHER INFORMATION CONTACT: Mr. Ed Melisky, FAA Office of Airports Planning and Environmental Division, FAA, 800 Independence Avenue, SW., Washington, DC 20591; telephone (202) 267–5869. His e-mail address is: *edward.melisky@faa.gov.*

Dated: June 28, 2006.

Dennis E. Roberts,

Director, Office of Airport, Planning and Programming, APP–1.

[FR Doc. E6–11564 Filed 7–19–06; 8:45 am]

BILLING CODE 4910–13–P

DEPARTMENT OF TRANSPORTATION

Federal Highway Administration

Environmental Impact Statement: Hamilton County, OH and Kenton County, KY

AGENCY: Federal Highway Administration (FHWA), DOT.

ACTION: Notice of Intent.

SUMMARY: The FHWA is issuing this notice to advise the public that an Environmental Impact Statement (EIS) will be prepared for a proposed highway project in Hamilton County, Ohio and Kenton County, Kentucky. This Notice of Intent is a follow-up to a notice published in the **Federal Register** on June 1, 2000 which advised the public that a Major Investment Study for the I–75 Corridor (completed in 2004) served as the formal scoping process for the preparation of one or more Environmental Assessments or EISs.

FOR FURTHER INFORMATION CONTACT: Mark L. Vonder Embse, Senior Transportation Engineer, Federal Highway Administration, 200 North High Street, Room 328, Columbus, Ohio 43215, Telephone: (614) 280–6854.

SUPPLEMENTARY INFORMATION: The FHWA, in cooperation with the Ohio Department of Transportation (ODOT) and the Kentucky Transportation Cabinet (KYTC), will prepare an EIS for proposed improvements to I–75/I–71 and connecting routes in the vicinity of the existing Ohio River crossing (Brent Spence Bridge) and the Cities of Cincinnati, Ohio and Covington, Kentucky. The project termini are approximately the Kyles Lane Interchange in Covington to the Western Hills Viaduct Interchange in Cincinnati. The study area is approximately 6.5 miles in length.

The purpose and need of the project are to improve traffic flow and level of service, improve safety, correct geometric deficiencies, and maintain links in key mobility, trade, and national defense transportation corridors. Alternatives under consideration include: (1) Taking no action; and (2) rehabilitation/upgrading of the existing infrastructure combined with construction of new facilities on new alignment; (3) replacement infrastructure on new alignment; and (4) other alternatives that may be developed during the NEPA process. FHWA, ODOT, KYTC, and local agencies will be invited to participate in defining the alternatives to be evaluated in the EIS, and any significant social, economic, or environmental issues related to the alternatives.

Letters describing the proposed action and soliciting comments will be sent to appropriate Federal, State, and local agencies, and to private organizations and citizens who have previously expressed or are known to have interest in this proposal. Comments received previously will be considered during the EIS process. A series of public meetings will be held in the project area. In addition, a public hearing will be held. Public notice will be given of the time and place of the meetings and hearing. The draft EIS will be available for public and agency review and comment prior to the public hearing.

To ensure that the full range of issues relating to this proposed action are addressed, and all significant issues identified, comments and suggestions are invited from all interested parties. Comments or questions concerning this proposed action and the EIS should be sent to the FHWA at the address provided above.

(Catalog of Federal Domestic Assistance Program Number 20.205, Highway Planning and Construction. The regulations implementing Executive Order 12372 regarding intergovernmental consultation on Federal programs and activities apply to this program.)

Issued On: June 27, 2006.

Victoria Peters,

Engineering & Operations Office Director, Federal Highway Administration, Columbus, Ohio.

[FR Doc. E6–11519 Filed 7–19–06; 8:45 am]

BILLING CODE 4910–22–P

DEPARTMENT OF TRANSPORTATION

Federal Motor Carrier Safety Administration

[Docket No. FMCSA–2005–24783]

Qualification of Drivers; Exemption Applications; Vision

AGENCY: Federal Motor Carrier Safety Administration (FMCSA), DOT.

ACTION: Notice of final disposition.

SUMMARY: FMCSA announces its decision to exempt 47 individuals from the vision requirement in the Federal Motor Carrier Safety Regulations (FMCSRs). The exemptions will enable these individuals to operate commercial motor vehicles (CMVs) in interstate commerce without meeting the prescribed vision standard. The Agency has concluded that granting these exemptions will provide a level of safety that is equivalent to, or greater than, the level of safety maintained without the exemptions for these CMV drivers.

DATES: The exemptions are effective July 20, 2006. The exemptions expire on July 21, 2008.

FOR FURTHER INFORMATION CONTACT: Dr. Mary D. Gunnels, Chief, Physical Qualifications Division, (202) 366–4001, *maggi.gunnels@dot.gov,* FMCSA, Department of Transportation, 400 Seventh Street, SW., Room 8301, Washington, DC 20590–0001. Office hours are from 8:30 a.m. to 5 p.m.,

Monday through Friday, except Federal holidays.

SUPPLEMENTARY INFORMATION:

Electronic Access

You may see all the comments online through the Document Management System (DMS) at *http://dmses.dot.gov.*

Docket: For access to the docket to read background documents or comments received, go to *http://dms.dot.gov* and/or Room PL–401 on the plaza level of the Nassif Building, 400 Seventh Street, SW., Washington, DC, between 9 a.m. and 5 p.m., Monday through Friday, except Federal holidays.

Privacy Act: Anyone may search the electronic form of all comments received into any of DOT's dockets by the name of the individual submitting the comment (or of the person signing the comment, if submitted on behalf of an association, business, labor union, or other entity). You may review DOT's complete Privacy Act Statement in the **Federal Register** (65 FR 19477, Apr. 11, 2000). This statement is also available at *http://dms.dot.gov.*

Background

On June 2, 2006, FMCSA published a Notice of receipt of exemption applications from 47 individuals, and requested comments from the public (71 FR 32183). The 47 individuals applied for exemptions from the vision requirement in 49 CFR 391.41(b)(10), for drivers who operate CMVs in interstate commerce. They are: Jawad K. Al-Shaibani, Kenneth J. Bernard, Allen G. Bors, Douglas, L. Brazil, John E. Breslin, Marcus S. Burkholder, Raymond L. Brush, Scott F. Chalfant, Leroy A. Chambers, Harvis P. Cosby, Joseph H. Fowler, Francisco Espinal, Brian G. Hagen, Edward J. Hess, Jr., Ralph E. Holmes, Timothy B. Hummel, Larry L. Jarvis, Charles E. Johnston, Volga Kirkwood, Richard M. Kriege, David C. Leoffler, John C. Lewis, Patrick E. Martin, Leland K. McAlhaney, Willam C. Mohr, Roger Moody, Larry A. Nienhuis, Corey L. Paraf, John J. Pribanic, Ronald M. Price, John P. Raftis, Matthew B. Richardson, Bruce G. Robinson, Alton M. Rutherford, Wayne N. Savoy, Richard A. Schneider, Joseph B. Shaw, Jr., David W. Skillman, Thomas G. Smith, Sandra J. Sperling, Kenneth C. Steele, Ryan K. Steelman, Paul D. Totty, Charles V. Tracey, Duane L. Tysseling, Richard A. Westfall, and Leonard R. Wilson.

Under 49 U.S.C. 31136(e) and 31315, FMCSA may grant an exemption for a 2-year period if it finds ''such exemption would likely achieve a level of safety that is equivalent to, or greater than, the level that would be achieved absent such exemption.'' The statute also allows the Agency to renew exemptions at the end of the 2-year period. Accordingly, FMCSA has evaluated the 47 applications on their merits and made a determination to grant exemptions to all of them. The comment period closed on July 3, 2006.

Vision and Driving Experience of the Applicants

The vision requirement in the FMCSRs provides:

A person is physically qualified to drive a commercial motor vehicle if that person has distant visual acuity of at least 20/40 (Snellen) in each eye without corrective lenses or visual acuity separately corrected to 20/40 (Snellen) or better with corrective lenses, distant binocular acuity of a least 20/40 (Snellen) in both eyes with or without corrective lenses, field of vision of at least 70 in the horizontal meridian in each eye, and the ability to recognize the colors of traffic signals and devices showing standard red, green, and amber (49 CFR 391.41(b)(10)).

FMCSA recognizes that some drivers do not meet the vision standard, but have adapted their driving to accommodate their vision limitation and demonstrated their ability to drive safely. The 47 exemption applicants listed in this Notice are in this category. They are unable to meet the vision standard in one eye for various reasons, including amblyopia, coloboma, macular scar, aphakia, keratoconus, retinal detachment, cataract, corneal scaring, prosthesis, and loss of vision due to trauma. In most cases, their eye conditions were not recently developed. All but twelve of the applicants were either born with their vision impairments or have had them since childhood. The twelve individuals who sustained their vision conditions as adults have had them for periods ranging from 4 to 28 years.

Although each applicant has one eye which does not meet the vision standard in 49 CFR 391.41(b)(10), each has at least 20/40 corrected vision in the other eye, and in a doctor's opinion, has sufficient vision to perform all the tasks necessary to operate a CMV. Doctors' opinions are supported by the applicants' possession of valid commercial driver's licenses (CDLs) or non-CDLs to operate CMVs. Before issuing CDLs, States subject drivers to knowledge and skills tests designed to evaluate their qualifications to operate a CMV. All these applicants satisfied the testing standards for their State of residence. By meeting State licensing requirements, the applicants demonstrated their ability to operate a commercial vehicle, with their limited vision, to the satisfaction of the State.

While possessing a valid CDL or non-CDL, these 47 drivers have been authorized to drive a CMV in intrastate commerce, even though their vision disqualified them from driving in interstate commerce. They have driven CMVs with their limited vision for careers ranging from 3 to 45 years. In the past 3 years, five of the drivers have had convictions for traffic violations and none of them were involved in crashes.

The qualifications, experience, and medical condition of each applicant were stated and discussed in detail in the June 2, 2006 Notice (71 FR 32183).

Basis for Exemption Determination

Under 49 U.S.C. 31136(e) and 31315, FMCSA may grant an exemption from the vision standard in 49 CFR 391.41(b)(10) if the exemption is likely to achieve an equivalent or greater level of safety than would be achieved without the exemption. Without the exemption, applicants will continue to be restricted to intrastate driving. With the exemption, applicants can drive in interstate commerce. Thus, our analysis focuses on whether an equal or greater level of safety is likely to be achieved by permitting each of these drivers to drive in interstate commerce as opposed to restricting him or her to driving in intrastate commerce.

To evaluate the effect of these exemptions on safety, FMCSA considered not only the medical reports about the applicants' vision, but also their driving records and experience with the vision deficiency. To qualify for an exemption from the vision standard, FMCSA requires a person to present verifiable evidence that he/she has driven a commercial vehicle safely with the vision deficiency for 3 years. Recent driving performance is especially important in evaluating future safety, according to several research studies designed to correlate past and future driving performance. Results of these studies support the principle that the best predictor of future performance by a driver is his/her past record of crashes and traffic violations. Copies of the studies may be found at docket number FMCSA–98–3637.

We believe we can properly apply the principle to monocular drivers, because data from the Federal Highway Administration's (FHWA) former waiver study program clearly demonstrate the driving performance of experienced monocular drivers in the program is better than that of all CMV drivers collectively. (See 61 FR 13338, 13345,

March 26, 1996). The fact that experienced monocular drivers demonstrated safe driving records in the waiver program supports a conclusion that other monocular drivers, meeting the same qualifying conditions as those required by the waiver program, are also likely to have adapted to their vision deficiency and will continue to operate safely.

The first major research correlating past and future performance was done in England by Greenwood and Yule in 1920. Subsequent studies, building on that model, concluded that crash rates for the same individual exposed to certain risks for two different time periods vary only slightly. (See Bates and Neyman, University of California Publications in Statistics, April 1952.) Other studies demonstrated theories of predicting crash proneness from crash history coupled with other factors. These factors—such as age, sex, geographic location, mileage driven and conviction history—are used every day by insurance companies and motor vehicle bureaus to predict the probability of an individual experiencing future crashes. (See Weber, Donald C., ''Accident Rate Potential: An Application of Multiple Regression Analysis of a Poisson Process,'' Journal of American Statistical Association, June 1971) A 1964 California Driver Record Study prepared by the California Department of Motor Vehicles concluded that the best overall crash predictor for both concurrent and nonconcurrent events is the number of single convictions. This study used 3 consecutive years of data, comparing the experiences of drivers in the first 2 years with their experiences in the final year.

Applying principles from these studies to the past 3-year record of the 47 applicants, one applicant had a traffic violation for speeding, two applicants failed to obey a traffic sign, one applicant failed to drive within the proper lane, one applicant violated his license restriction, and no applicants were involved in crashes. The applicants achieved this record of safety while driving with their vision impairment, demonstrating the likelihood that they have adapted their driving skills to accommodate their condition. As the applicants' ample driving histories with their vision deficiencies are good predictors of future performance, FMCSA concludes their ability to drive safely can be projected into the future.

We believe the applicants' intrastate driving experience and history provide an adequate basis for predicting their ability to drive safely in interstate commerce. Intrastate driving, like interstate operations, involves substantial driving on highways on the interstate system and on other roads built to interstate standards. Moreover, driving in congested urban areas exposes the driver to more pedestrian and vehicular traffic than exists on interstate highways. Faster reaction to traffic and traffic signals is generally required because distances between them are more compact. These conditions tax visual capacity and driver response just as intensely as interstate driving conditions. The veteran drivers in this proceeding have operated CMVs safely under those conditions for at least 3 years, most for much longer. Their experience and driving records lead us to believe that each applicant is capable of operating in interstate commerce as safely as he/she has been performing in intrastate commerce. Consequently, FMCSA finds that exempting these applicants from the vision standard in 49 CFR 391.41(b)(10) is likely to achieve a level of safety equal to that existing without the exemption. For this reason, the Agency is granting the exemptions for the 2-year period allowed by 49 U.S.C. 31136(e) and 31315 to the 47 applicants listed in the Notice of June 2, 2006 (71 FR 32183).

We recognize that the vision of an applicant may change and affect his/her ability to operate a CMV as safely as in the past. As a condition of the exemption, therefore, FMCSA will impose requirements on the 47 individuals consistent with the grandfathering provisions applied to drivers who participated in the Agency's vision waiver program.

Those requirements are found at 49 CFR 391.64(b) and include the following: (1) That each individual be physically examined every year (a) by an ophthalmologist or optometrist who attests that the vision in the better eye continues to meet the standard in 49 CFR 391.41(b)(10), and (b) by a medical examiner who attests that the individual is otherwise physically qualified under 49 CFR 391.41; (2) that each individual provide a copy of the ophthalmologist's or optometrist's report to the medical examiner at the time of the annual medical examination; and (3) that each individual provide a copy of the annual medical certification to the employer for retention in the driver's qualification file, or keep a copy in his/her driver's qualification file if he/she is self-employed. The driver must also have a copy of the certification when driving, for presentation to a duly authorized Federal, State, or local enforcement official.

Discussion of Comments

Advocates for Highway and Auto Safety (Advocates) expressed opposition to FMCSA's policy to grant exemptions from the FMCSR, including the driver qualification standards. Specifically, Advocates: (1) Objects to the manner in which FMCSA presents driver information to the public and makes safety determinations; (2) objects to the Agency's reliance on conclusions drawn from the vision waiver program; (3) claims the Agency has misinterpreted statutory language on the granting of exemptions (49 U.S.C. 31136(e) and 31315); and finally (4) suggests that a 1999 Supreme Court decision affects the legal validity of vision exemptions.

The issues raised by Advocates were addressed at length in 64 FR 51568 (September 23, 1999), 64 FR 66962 (November 30, 1999), 64 FR 69586 (December 13, 1999), 65 FR 159 (January 3, 2000), 65 FR 57230 (September 21, 2000), and 66 FR 13825 (March 7, 2001). We will not address these points again here, but refer interested parties to those earlier discussions.

Two letters of recommendation were received in favor of granting the Federal vision exemption to two of the applicants. The first was concerning Harvis Cosby and it was written by Andrew Johnson, who is a transportation supervisor at Toys R Us where Mr. Cosby is currently employed. The second letter was regarding Duane L. Tysseling and it was written by the Iowa Department of Transportation. Both letters suggest that these applicants be granted Federal vision exemption due to their high level of professionalism and safety while driving.

Conclusion

Based upon its evaluation of the 47 exemption applications, FMCSA exempts Jawad K. Al-Shaibani, Kenneth J. Bernard, Allen G. Bors, Douglas, L. Brazil, John E. Breslin, Marcus S. Burkholder, Raymond L. Brush, Scott F. Chalfant, Leroy A. Chambers, Harvis P. Cosby, Joseph H. Fowler, Francisco Espinal, Brian G. Hagen, Edward J. Hess, Jr., Ralph E. Holmes, Timothy B. Hummel, Larry L. Jarvis, Charles E. Johnston, Volga Kirkwood, Richard M. Kriege, David C. Leoffler, John C. Lewis, Patrick E. Martin, Leland K. McAlhaney, Willam C. Mohr, Roger Moody, Larry A. Nienhuis, Corey L. Paraf, John J. Pribanic, Ronald M. Price, John P. Raftis, Matthew B. Richardson, Bruce G. Robinson, Alton M. Rutherford, Wayne N. Savoy, Richard A. Schneider, Joseph B. Shaw, Jr., David W. Skillman, Thomas G. Smith, Sandra J. Sperling,

Kenneth C. Steele, Ryan K. Steelman, Paul D. Totty, Charles V. Tracey, Duane L. Tysseling, Richard A. Westfall, and Leonard R. Wilson from the vision requirement in 49 CFR 391.41(b)(10), subject to the requirements cited above (49 CFR 391.64(b)).

In accordance with 49 U.S.C. 31136(e) and 31315, each exemption will be valid for 2 years unless revoked earlier by FMCSA. The exemption will be revoked if: (1) The person fails to comply with the terms and conditions of the exemption; (2) the exemption has resulted in a lower level of safety than was maintained before it was granted; or (3) continuation of the exemption would not be consistent with the goals and objectives of 49 U.S.C. 31136 and 31315.

If the exemption is still effective at the end of the 2-year period, the person may apply to FMCSA for a renewal under procedures in effect at that time.

Issued on: July 13, 2006.

Rose A. McMurray,

Associate Administrator, Policy and Program Development.

[FR Doc. E6–11556 Filed 7–19–06; 8:45 am]

BILLING CODE 4910–EX–P

DEPARTMENT OF TRANSPORTATION

Federal Railroad Administration

Petition for Waiver of Compliance

In accordance with part 211 of Title 49 Code of Federal Regulations (CFR), notice is hereby given that the Federal Railroad Administration (FRA) received a request for a waiver of compliance with certain requirements of its safety standards. The individual petition is described below, including the party seeking relief, the regulatory provisions involved, the nature of the relief being requested, and the petitioner's arguments in favor of relief.

The National Railroad Passenger Corporation (Amtrak)

[Waiver Petition Docket Number FRA–2006–25386]

Amtrak seeks a waiver of compliance from certain provisions of 49 CFR part 238, Passenger Equipment Safety Standards. Specifically, § 238.309(d)(2), which provide the clean, oil, test, and stencil (COT&S) requirements for air brake valves.

In the aftermath of the events surrounding Hurricane Katrina, the FRA identified a need to have passenger car equipment readily available for emergency evacuation purposes. Amtrak has responded by making 24 Amfleet I passenger cars, that have been identified and are currently in storage, available to support this effort. In order to expedite the return of this equipment for service by July 28, 2006, Amtrak requests relief from the COT&S requirements. The range of dates in which these cars last had a COT&S performed is October 2001 to July 2002. The regulation requires a COT&S every 1,476 days. Prior to being placed in-service, Amtrak will perform a single car air brake test on each car to ensure the integrity of the air brake system. Additionally, Amtrak will ensure the integrity of all safety critical systems, as outlined in § 238.303, § 238.305 and § 238.311.

FRA reserves the right to issue a temporary interim waiver if an emergency arises or other conditions warrant, before the comment period ends for this waiver request.

Interested parties are invited to participate in these proceedings by submitting written views, data, or comments. FRA does not anticipate scheduling a public hearing in connection with these proceedings since the facts do not appear to warrant a hearing. If any interested party desires an opportunity for oral comment, they should notify FRA, in writing, before the end of the comment period and specify the basis for their request.

All communications concerning these proceedings should identify the appropriate docket number (e.g., Waiver Petition Docket Number FRA–2006–25386) and must be submitted to the Docket Clerk, DOT Docket Management Facility, Room PL–401 (Plaza Level), 400 7th Street, SW., Washington, DC 20590. Communications received within 20 days of the date of this notice will be considered by FRA before final action is taken. Comments received after that date will be considered as far as practicable. All written communications concerning these proceedings are available for examination during regular business hours (9 a.m.–5 p.m.) at the above facility. All documents in the public docket are also available for inspection and copying on the Internet at the docket facility's Web site at *http://dms.dot.gov*.

Anyone is able to search the electronic form of all comments received into any of our dockets by the name of the individual submitting the comment (or signing the comment, if submitted on behalf of an association, business, labor union, etc.). You may review DOT's complete Privacy Act Statement in the **Federal Register** published on April 11, 2000. (Volume 65, Number 70; Pages 19477–78). The Statement may also be found at *http://dms.dot.gov*.

Issued in Washington, DC, on July 14, 2006.

Grady C. Cothen, Jr.

Deputy Associate Administrator for Safety Standards and Program Development.

[FR Doc. E6–11475 Filed 7–19–06; 8:45 am]

BILLING CODE 4910–06–P

DEPARTMENT OF TRANSPORTATION

Surface Transportation Board

[STB Finance Docket No. 34843 (Sub-No. 1)]

Union Pacific Railroad Company—Temporary Trackage Rights Exemption—BNSF Railway Company

BNSF Railway Company (BNSF), pursuant to a written trackage rights agreement entered into between BNSF and Union Pacific Railroad Company (UP), has agreed to grant UP temporary overhead trackage rights, to expire on September 15, 2006, over BNSF's lines between milepost 2.1 (Grand Avenue), St. Louis, MO, and milepost 34.1, Pacific, MO, a distance of 32 miles. The original grant of temporary overhead trackage rights exempted in *Union Pacific Railroad Company—Temporary Trackage Rights Exemption—BNSF Railway Company*, STB Finance Docket No. 34843 (STB served Mar. 24, 2006), covered the same line, but will expire on or about July 31, 2006. The purpose of this transaction is to modify the temporary overhead trackage rights exempted in STB Finance Docket No. 34843 to extend the expiration date from July 31, 2006, to September 15, 2006.

The transaction was scheduled to be consummated on or after July 7, 2006, the effective date of the notice. The purpose of the temporary trackage rights is to facilitate the performance of maintenance work on UP lines.

As a condition to this exemption, any employee affected by the acquisition of the temporary trackage rights will be protected by the conditions imposed in *Norfolk and Western Ry. Co.—Trackage Rights—BN*, 354 I.C.C. 605 (1978), as modified in *Mendocino Coast Ry., Inc.—Lease and Operate*, 360 I.C.C. 653 (1980), and any employee affected by the discontinuance of those trackage rights will be protected by the conditions set out in *Oregon Short Line R. Co.—Abandonment—Goshen*, 360 I.C.C. 91 (1979).

This notice is filed under 49 CFR 1180.2(d)(8). If it contains false or misleading information, the exemption is void *ab initio*. Petitions to revoke the exemption under 49 U.S.C. 10502(d) may be filed at any time. The filing of

a petition to revoke will not automatically stay the transaction.

An original and 10 copies of all pleadings, referring to STB Finance Docket No. 34843 (Sub-No. 1), must be filed with the Surface Transportation Board, 1925 K Street, NW., Washington, DC 20423–0001. In addition, one copy of each pleading must be served on Gabriel S. Meyer, Union Pacific Railroad Company, 1400 Douglas St., STOP 1580, Omaha, NE 68179.

Board decisions and notices are available on our Web site at *http://www.stb.dot.gov.*

Decided: July 13, 2006.

By the Board, David M. Konschnik, Director, Office of Proceedings.

Vernon A. Williams,

Secretary.

[FR Doc. E6–11476 Filed 7–19–06; 8:45 am]

BILLING CODE 4915–01–P

DEPARTMENT OF TRANSPORTATION

Surface Transportation Board

[STB Finance Docket No. 30868 (Sub-No. 1)]

Union Pacific Railroad Company—Amendment of Trackage Rights Exemption—BNSF Railway Company

BNSF Railway Company (BNSF) has agreed to modify an existing overhead trackage rights agreement, under which Union Pacific Railroad Company (UP) would be permitted to operate over BNSF trackage between mileposts 59.06 and 0.65 and between mileposts 59.06 and 60.15, a distance of approximately 1.74 miles, in Lincoln, NE.

UP indicates that the transaction was to be consummated on July 7, 2006, the effective date of the exemption (7 days after the exemption was filed).

The purpose of the amended trackage rights agreement is to exclude from the agreement the portion of track from milepost 59.06 and milepost 60.15, a distance of approximately 1.09 miles. UP states that it has never used or consummated its right to operate over this track. Thus, pursuant to the amended trackage rights agreement, UP will operate between mileposts 0.65 and 59.06, a distance of approximately .65 miles.

As a condition to this exemption, any employees affected by the amended trackage rights will be protected by the conditions imposed in *Norfolk and Western Ry. Co.*—Trackage Rights—BN, 354 I.C.C. 605 (1978), as modified in *Mendocino Coast Ry., Inc.—Lease and Operate*, 360 I.C.C. 653 (1980).

This notice is filed under 49 CFR 1180.2(d)(7). If it contains false or misleading information, the exemption is void *ab initio.* Petitions to revoke the exemption under 49 U.S.C. 10502(d) may be filed at any time. The filing of a petition to revoke will not automatically stay the transaction.

An original and 10 copies of all pleadings, referring to STB Finance Docket No. 30868 (Sub-No. 1), must be filed with the Surface Transportation Board, 1925 K Street, NW., Washington, DC 20423–0001. In addition, a copy of each pleading must be served on Gabriel S. Meyer, 1400 Douglas Street, STOP 1580, Omaha, NE 65179.

Board decisions and notices are available on our Web site at *http://www.stb.dot.gov.*

Decided: July 12, 2006.

By the Board, David M. Konschnik, Director, Office of Proceedings.

Vernon A. Williams,

Secretary.

[FR Doc. E6–11477 Filed 7–19–06; 8:45 am]

BILLING CODE 4915–01–P

DEPARTMENT OF TRANSPORTATION

Surface Transportation Board

[STB Finance Docket No. 34866 (Sub-No. 1)]

Union Pacific Railroad Company—Temporary Trackage Rights Exemption—The Kansas City Southern Railway Company

The Kansas City Southern Railway Company (KCS), pursuant to a written trackage rights agreement entered into between KCS and Union Pacific Railroad Company (UP), has agreed to grant UP temporary overhead trackage rights, to expire on October 31, 2006, over KCS's trackage between milepost 482.0 on KCS's Mexico Subdivision at Kansas City, MO, and milepost 252.1 on KCS's East St. Louis Terminal Subdivision at Godfrey, IL, a distance of approximately 285 miles. The original grant of temporary overhead trackage rights exempted in *Union Pacific Railroad Company—Temporary Trackage Rights Exemption—The Kansas City Southern Railway Company*, STB Finance Docket No. 34866 (STB served May 2, 2006), cover the same line, but are due to expire on July 31, 2006. The purpose of this transaction is to modify the temporary overhead trackage rights exempted in STB Finance Docket No. 34866 to extend the expiration date from July 31, 2006, to October 31, 2006.

The transaction was scheduled to be consummated on July 7, 2006, the effective date of the exemption. The purpose of the temporary overhead trackage rights is to facilitate maintenance work on UP lines.

As a condition to this exemption, any employees affected by the acquisition of the temporary trackage rights will be protected by the conditions imposed in *Norfolk and Western Ry. Co.—Trackage Rights—BN*, 354 I.C.C. 605 (1978), as modified in *Mendocino Coast Ry., Inc.—Lease and Operate*, 360 I.C.C. 653 (1980), and any employee affected by the discontinuance of those trackage rights will be protected by the conditions set out in *Oregon Short Line R. Co.—Abandonment—Goshen*, 360 I.C.C. 91 (1979).

This notice is filed under 49 CFR 1180.2(d)(8). If it contains false or misleading information, the exemption is void *ab initio.* Petitions to revoke the exemption under 49 U.S.C. 10502(d) may be filed at any time. The filing of a petition to revoke will not automatically stay the transaction.

An original and 10 copies of all pleadings, referring to STB Finance Docket No. 34866 (Sub-No. 1), must be filed with the Surface Transportation Board, 1925 K Street, NW., Washington, DC 20423–0001. In addition, a copy of each pleading must be served on Gabriel S. Meyer, Assistant General Attorney, Union Pacific Railroad Company, 1400 Douglas Street, STOP 1580, Omaha, NE 68179.

Board decisions and notices are available on our Web site at *http://www.stb.dot.gov.*

Decided: July 13, 2006.

By the Board, David M. Konschnik, Director, Office of Proceedings.

Vernon A. Williams,

Secretary.

[FR Doc. E6–11478 Filed 7–19–06; 8:45 am]

BILLING CODE 4915–01–P

DEPARTMENT OF THE TREASURY

Submission for OMB Review; Comment Request

July 13, 2006.

The Department of the Treasury has submitted the following public information collection requirement(s) to OMB for review and clearance under the Paperwork Reduction Act of 1995, Public Law 104–13. Copies of the submission(s) may be obtained by calling the Treasury Bureau Clearance Officer listed. Comments regarding this information collection should be addressed to the OMB reviewer listed and to the Treasury Department Clearance Officer, Department of the Treasury, Room 11000, 1750

Pennsylvania Avenue, NW., Washington, DC 20220.

DATES: Written comments should be received on or before August 21, 2006 to be assured of consideration.

Alcohol and Tobacco Tax and Trade Bureau (TTB)

OMB Number: 1513–0047.
Type of Review: Extension.
Title: Distilled Spirits Records and Monthly Report of Production Operations.
Form: TTB REC 5110/01 and TTB F 5110.40.
Description: The information collected is used to account for proprietor's tax liability, adequacy of bond coverage and protection of the revenue. The information also provides data to analyze trends in the industry, and plan efficient allocation of field resources, audit plant operations, and compilation of statistics for government economic analysis.
Respondents: Business or other for-profit.
Estimated Total Burden Hours: 3,600 hours.

OMB Number: 1513–0028.
Type of Review: Revision.
Title: Application for an Industrial Alcohol User Permit.
Form: TTB F 5150.22.
Description: TTB F 5150.22 is used to determine the eligibility of the applicant to engage in certain operations and the extent of the operations for the production and distribution of specially denatured spirits (alcohol/rum). This form identifies the location of the premises and establishes whether the premises will be in conformity with the Federal laws and regulations.
Respondents: Business or other for-profit, not-for-profit institutions, state, local, or tribal governments.
Estimated Total Burden Hours: 738 hours.

OMB Number: 1513–0048.
Type of Review: Extension.
Title: Registration of Distilled Spirits Plant and Miscellaneous Requests and Notices for Distilled Spirits Plants.
Form: TTB F 5110.41.
Description: The information provided by the applicants assists TTB in determining eligibility and providing for registration. These eligibility requirements are for persons who wish to establish distilled spirits plant operations. However, both statutes and regulations allow variances from regulations, and this information gives data to permit a variance.
Respondents: Business or other for-profit.
Estimated Total Burden Hours: 1,888 hours.

OMB Number: 1513–0060.
Type of Review: Extension.
Title: Letterhead Applications and Notices Relating to Tax-Free Alcohol.
Form: TTB REC 5150/4.
Description: Tax-free alcohol is used for nonbeverage purposes in scientific research and medicinal uses by educational organizations, hospitals, laboratories, etc. Permits/Applications control authorized uses and flow. TTB REC 5150/4 is designed to protect revenue and public safety.
Respondents: Business or other for-profit, not-for-profit institutions, Federal, state, local or tribal governments.
Estimated Total Burden Hours: 2,222 hours.

OMB Number: 1513–0004.
Type of Review: Extension.
Title: Authorization to Furnish Financial Information and Certificate of Compliance.
Form: TTB F 5030.6.
Description: The Right to Financial Privacy Act of 1978 limits access to records held by financial institutions and provides for certain procedures to gain access to the information. TTB F 5030.6 serves as both a customer authorization for TTB to receive information and as the required certification to the financial institution.
Respondents: Business or other for-profit.
Estimated Total Burden Hours: 500 hours.

OMB Number: 1513–0074.
Type of Review: Extension.
Title: Airlines Withdrawing Stock from Customs Custody.
Form: TTB REC 5620/2.
Description: Airlines may withdraw tax exempt distilled spirits, wine, and beer from Customs custody for foreign flights. Required record shows amount of spirits and wine withdrawn and flight identification; also has Customs certification; enables TTB to verify that tax is not due; allows spirits and wines to be traced and maintains accountability. Protects tax revenue. The collection of information is contained in 27 CFR 28.280 and 28.281.
Respondents: Business or other for-profit.
Estimated Total Burden Hours: 2,500 hours.

OMB Number: 1513–0089.
Type of Review: Extension.
Title: Liquors and Articles from Puerto Rico or the Virgin Islands.
Form: TTB REC 5530/3.
Description: The information collection requirements for persons bringing nonbeverage products into the United States from Puerto Rico and the Virgin Islands are necessary for the verification of claims for drawback of distilled spirits excise taxes paid on such products.
Respondents: Business or other for-profit.
Estimated Total Burden Hours: 160 hours.

Clearance Officer: Frank Foote, (202) 927–9347, Alcohol and Tobacco Tax and Trade Bureau, Room 200 East, 1310 G Street, NW., Washington, DC 20005.
OMB Reviewer: Alexander T. Hunt, (202) 395–7316, Office of Management and Budget, Room 10235, New Executive Office Building, Washington, DC 20503.

Robert Dahl,
Treasury PRA Clearance Officer.

[FR Doc. E6–11479 Filed 7–19–06; 8:45 am]
BILLING CODE 4810–31–P

DEPARTMENT OF THE TREASURY

Submission for OMB Review; Comment Request

July 13, 2006.

The Department of Treasury has submitted the following public information collection requirement(s) to OMB for review and clearance under the Paperwork Reduction Act of 1995, Public Law 104–13. Copies of the submission(s) may be obtained by calling the Treasury Bureau Clearance Officer listed. Comments regarding this information collection should be addressed to the OMB reviewer listed and to the Treasury Department Clearance Officer, Department of the Treasury, Room 11000, 1750 Pennsylvania Avenue, NW., Washington, DC 20220.

DATES: Written comments should be received on or before August 21, 2006 to be assured of consideration.

Financial Management Service

OMB Number: 1510–0056.
Type of Review: Extension.
Title: ACH Vendor/Miscellaneous Payment Enrollment Form.
Form: FMS 3881.
Description: Payment data will be collected from vendors doing business with the Federal Government. FMS/Treasury will use the information to electronically transmit payments to vendors' financial institutions.
Respondents: Business or other for-profit, not-for-profit and State, Local or Tribal Government.
Estimated Total Burden Hours: 17,500 hours.
Clearance Officer: Jiovannah Diggs, (202) 874–7662, Financial Management

Service, Room 144, 3700 East West Highway, Hyattsville, MD 20782.

OMB Reviewer: Alexander T. Hunt, (202) 395–7316, Office of Management and Budget, Room 10235, New Executive Office Building, Washington, DC 20503.

Michael A. Robinson,

Treasury PRA Clearance Officer.

[FR Doc. E6–11481 Filed 7–19–06; 8:45 am]

BILLING CODE 4810–35–P

DEPARTMENT OF THE TREASURY

Submission for OMB Review; Comment Request

July 13, 2006.

The Department of Treasury has submitted the following public information collection requirement(s) to OMB for review and clearance under the Paperwork Reduction Act of 1995, Public Law 104–13. Copies of the submission(s) may be obtained by calling the Treasury Bureau Clearance Officer listed. Comments regarding this information collection should be addressed to the OMB reviewer listed and to the Treasury Department Clearance Officer, Department of the Treasury, Room 11000, 1750 Pennsylvania Avenue, NW., Washington, DC 20220.

DATES: Written comments should be received on or before August 21, 2006 to be assured of consideration.

Alcohol and Tobacco Tax and Trade Bureau (TTB)

OMB Number: 1513–0057.

Type of Review: Extension.

Title: Letterhead Application and Notices Relating to Wine.

Form: TTB REC 5120/2.

Description: Letterhead application and notices relating to wine are required to ensure the intended activity will not jeopardize the revenue or defraud consumers.

Respondents: Business or other for-profit.

Estimated Total Burden Hours: 825 hour.

OMB Number: 1513–0010.

Type of Review: Extension.

Title: Bonded Wineries—Formula and Process for Wine, Letterhead Application and Notices relating to Formula Wine.

Form: TTB F 5120.29.

Description: TTB F 5120.29 is used to determine the classification of wines for labeling and consumer protection. The form describes the person filing, type of product to be made and restrictions to the labeling and manufacture. The form is also used to audit a product.

Respondents: Business or other for-profit.

Estimated Total Burden Hours: 1,200 hour.

OMB Number: 1513–0088.

Type of Review: Extension.

Title: Alcohol, Tobacco and Firearms, Tax Returns, Claims and Related Documents.

Form: TTB REC 5000/24.

Description: TTB is responsible for the collection of the excise taxes on firearms, ammunition, distilled spirits, wine, beer, cigars, cigarettes, chewing tobacco, snuff, cigarette papers and tubes and pipe tobacco. Alcohol, tobacco, firearms and ammunition excise taxes are required to be collected on the basis of a return.

Respondents: Business or other for-profit, individuals or households and not-for-profit.

Estimated Total Burden Hours: 503,921 hours.

OMB Number: 1513–0121.

Type of Review: Revision.

Title: Labeling of major food allergens.

Description: The collection of information involves voluntary labeling of major food allergens used in the production of alcohol beverages and also involves petitions for exemption from full allergen labeling. The collection corresponds to the recent amendments to the FD&C Act in Title II of Public Law 108–282, 118 Stat. 905.

Respondents: Business or other for-profit.

Estimated Total Burden Hours: 730 hour.

Clearance Officer: Frank Foote, (202) 927–9347, Alcohol and Tobacco Tax and Trade Bureau, Room 200 East, 1310 G. Street, NW., Washington, DC 20005.

OMB Reviewer: Alexander T. Hunt, (202) 395–7316, Office of Management and Budget, Room 10235, New Executive Office Building, Washington, DC 20503.

Michael A. Robinson,

Treasury PRA Clearance Officer.

[FR Doc. E6–11482 Filed 7–19–06; 8:45 am]

BILLING CODE 4810–31–P

DEPARTMENT OF THE TREASURY

Internal Revenue Service

Open Meeting of the Taxpayer Advocacy Panel Earned Income Tax Credit Issue Committee

AGENCY: Internal Revenue Service (IRS) Treasury.

ACTION: Notice.

SUMMARY: An open meeting of the Taxpayer Advocacy Panel Earned Income Tax Credit Issue Committee will be conducted (via teleconference). The Taxpayer Advocacy Panel is soliciting public comments, ideas and suggestions on improving customer service at the Internal Revenue Service.

DATES: The meeting will be held Tuesday, August 8, 2006.

FOR FURTHER INFORMATION CONTACT: Audrey Y. Jenkins at 1–888–912–1227 (toll-free), or 718–488–2085 (non toll-free).

SUPPLEMENTARY INFORMATION: Notice is hereby given pursuant to section 10(a)(2) of the Federal Advisory Committee Act, 5 U.S.C. App. (1988) that an open meeting of the Taxpayer Advocacy Panel Earned Income Tax Credit Issue Committee will be held Tuesday, August 8, 2006 from 12 p.m. to 1 p.m. ET via a telephone conference call. The public is invited to make oral comments. Individual comments will be limited to 5 minutes. For information or to confirm attendance, notification of intent to attend the meeting must be made with Audrey Y. Jenkins. Ms. Jenkins may be reached at 1–888–912–1227 or (718) 488–2085, send written comments to Audrey Y. Jenkins, TAP Office, 10 MetroTech Center, 625 Fulton Street, Brooklyn, NY 11201 or post comments to the Web site: *http://www.improveirs.org.* Due to limited conference lines, notification of intent to participate in the telephone conference call meeting must be made in advance.

The agenda will include various IRS issues.

Dated: July 14, 2006.

Ava B. Turner,

Acting Director, Taxpayer Advocacy Panel.

[FR Doc. E6–11544 Filed 7–19–06; 8:45 am]

BILLING CODE 4830–01–P

U.S.-CHINA ECONOMIC AND SECURITY REVIEW COMMISSION

Notice of Open Public Hearing

AGENCY: U.S.-China Economic and Security Review Commission.

ACTION: Notice of open public hearing.

SUMMARY: Notice is hereby given of the following hearing of the U.S.-China Economic and Security Review Commission.

Name: Larry M. Wortzel, Chairman of the U.S.-China Economic and Security Review Commission.

The Commission is mandated by Congress to investigate, assess, evaluate and report to Congress annually on ''regional economic and security impacts.'' The mandate specifically

charges the Commission to evaluate ''The triangular economic and security relationship among the United States, Taipei and the People's Republic of China (including the military modernization and force deployments of the People's Republic of China aimed at Taipei).'' In addition, the Commission must examine ''The effect of the large and growing economy of the People's Republic of China on world energy supplies and the role the United States can play (including joint research and development efforts and technological assistance), in influencing the energy policy of the People's Republic of China.''

Pursuant to this mandate, the Commission will hold a public hearing in Washington, DC on August 3–4, 2006.

Background

This event is the seventh in a series of public hearings the Commission will hold during its 2006 report cycle to collect input from leading experts in academia, business, industry, government and the public on the impact of the economic and national security implications of the U.S. growing bilateral trade and economic relationship with China. The August 3–4 hearing is being conducted to obtain commentary about issues connected to China's global diplomatic activities and strategies and the country's energy security. Information on upcoming hearings, as well as transcripts of past Commission hearings, can be obtained from the USCC Web site *http://www.uscc.gov.*

The August 3 hearing will address ''China's Role in the World: Is China a Responsible Stakeholder?'' and will be Co-chaired by Vice Chairman Carolyn Bartholomew and Commissioner Daniel Blumenthal. The August 4 hearing will address ''China's Energy Security'' and will be Co-chaired by Commissioners Michael Wessel and Daniel Blumenthal.

Purpose of Hearing

The hearing is designed to assist the Commission in fulfilling its mandate by identifying and assessing the impact of China's global diplomacy on U.S. national interests, evaluating its participation in international organizations, such as the Shanghai Cooperation Organization, examining its relationships with countries of concern, and reviewing China's energy demands and policies, including its strategies for oil acquisition and activities of international cooperation designed to improve energy efficiency. Invited witnesses include congressional members, administration officials, and academic experts, and research fellows.

Copies of the hearing agenda will be made available on the Commission's Web site *http://www.uscc.gov.* Any interested party may file a written statement by August 3, 2006, by mailing to the contact below.

Date and Time: Thursday, August 3, 2006, 8:30 a.m. to 5 pm, and Friday, August 4, 2006, 8:30 a.m. to 12:30 p.m. Eastern Standard Time. A detailed agenda for the hearing will be posted to the Commission's Web site at *http://www.uscc.gov* in the near future.

ADDRESSES: The hearing will be held in Room 385, Russell Senate Office Building. Public seating is limited to about 50 people on a first come, first served basis. Advance reservations are not required.

FOR FURTHER INFORMATION CONTACT: Any member of the public wishing further information concerning the hearing should contact Kathy Michels, Associate Director for the U.S.-China Economic and Security Review Commission, 444 North Capitol Street, NW., Suite 602, Washington, DC 20001; phone 202–624–1409, or via e-mail at *kmichels@uscc.gov.*

Authority: Congress created the U.S.-China Economic and Security Review Commission in 2000 in the National Defense Authorization Act (Public Law 106–398 as amended by Division P of the Consolidated Appropriations Resolution, 2003 (Pub. L. 108–7), as amended by Pub. L. 109–108 (November 22, 2005).

Dated: July 17, 2006.

Kathleen J. Michels,

Associate Director, U.S.-China Economic and Security Review Commission.

[FR Doc. E6–11542 Filed 7–19–06; 8:45 am]

BILLING CODE 1137–00–P

Federal Register

Thursday,
July 20, 2006

Part II

Department of Energy

Office of Energy Efficiency and Renewable Energy

10 CFR Part 430

Energy Conservation Program for Consumer Products: Test Procedure for Residential Central Air Conditioners and Heat Pumps; Proposed Rule

DEPARTMENT OF ENERGY

Office of Energy Efficiency and Renewable Energy

10 CFR Part 430

[Docket No. EE–RM/TP–02–002]

RIN 1904–AB55

Energy Conservation Program for Consumer Products: Test Procedure for Residential Central Air Conditioners and Heat Pumps

AGENCY: Office of Energy Efficiency and Renewable Energy, Department of Energy.

ACTION: Notice of proposed rulemaking and public meeting.

SUMMARY: The Department of Energy (DOE or the Department) is proposing to amend its test procedure for residential central air conditioners and heat pumps. The proposal implements test procedure changes for small-duct, high-velocity systems, multiple-split systems, two-capacity units, and updates references to the current American Society of Heating, Refrigerating, and Air-Conditioning Engineers (ASHRAE) standards. The proposal also clarifies issues associated with sampling and rating both tested and untested systems. The Department will hold a public meeting to discuss and receive comments on the proposal.

DATES: The Department will hold a public meeting on Wednesday, August 23, 2006, from 9 a.m. to 4 p.m., in Washington, DC. The Department must receive requests to speak at the public meeting before 4 p.m., Wednesday, August 9, 2006. The Department must receive a signed original and an electronic copy of statements to be given at the public meeting before 4 p.m., Wednesday, August 16, 2006.

The Department will accept comments, data, and information regarding the notice of proposed rulemaking (NOPR) before and after the public meeting, but no later than September 18, 2006. See section IV, ''Public Participation,'' of this NOPR for details.

ADDRESSES: You may submit comments, identified by docket number EE–RM/TP–02–002 and/or RIN number 1904–AB55, by any of the following methods:

1. *Federal eRulemaking Portal: http://www.regulations.gov.* Follow the instructions for submitting comments.

2. *E-mail: cactestprocedure2006@ee.doe.gov.* Include docket number EE–RM/TP–02–002 and/or RIN number 1904–AB55 in the subject line of the message.

3. *Mail:* Ms. Brenda Edwards-Jones, U.S. Department of Energy, Building Technologies Program, Mail-stop EE–2J, NOPR for Test Procedure for Residential Central Air Conditioners and Heat Pumps, docket number EE–RM/TP–02–002 and/or RIN number 1904–AB55, 1000 Independence Avenue, SW., Washington, DC 20585–0121. Please submit one signed original paper copy.

4. *Hand Delivery/Courier:* Ms. Brenda Edwards-Jones, U.S. Department of Energy, Building Technologies Program, Room 1J–018, 1000 Independence Avenue, SW., Washington, DC 20585–0121. Telephone: (202) 586–2945. Please submit one signed original paper copy.

Instructions: All submissions received must include the agency name and docket number or Regulatory Information Number (RIN) for this rulemaking. For detailed instructions on submitting comments and additional information on the rulemaking process, see section IV of this document (Public Participation).

Docket: For access to the docket to read background documents or comments received, visit the U.S. Department of Energy, Forrestal Building, Room 1J–018 (Resource Room of the Building Technologies Program), 1000 Independence Avenue, SW., Washington, DC, 20585–0121, Telephone Number: (202) 586–2945, between 9 a.m. and 4 p.m., Monday through Friday, except Federal holidays. Please call Ms. Brenda Edwards-Jones at the above telephone number for additional information regarding visiting the Resource Room. Please note: The Department's Freedom of Information Reading Room (formerly Room 1E–190 at the Forrestal Building) is no longer housing rulemaking materials.

FOR FURTHER INFORMATION CONTACT: Michael Raymond, Project Manager, Test Procedures for Residential Central Air Conditioners and Heat Pumps, Docket No. EE–RM/TP–02–002, U.S. Department of Energy, Office of Energy Efficiency and Renewable Energy, Building Technologies Program, EE–2J, 1000 Independence Avenue, SW., Washington, DC 20585–0121, Telephone Number: (202) 586–9611, e-mail: *Michael.raymond@ee.doe.gov;*

Francine Pinto, Esq., U.S. Department of Energy, Office of the General Counsel, GC–72, 1000 Independence Avenue, SW., Washington, DC 20585–0121, (202) 586–9507, e-mail: *Francine.Pinto@hq.doe.gov.*

SUPPLEMENTARY INFORMATION:

I. Summary of the Proposed Rule
A. Overview
B. Authority
C. Background
D. Summary of the Test Procedure Revisions
II. Discussion
A. Proposed substantive changes to the test procedure in Appendix M
B. Proposed substantive changes to other parts of the CFR that affect the testing and rating of residential central air conditioners and heat pumps
C. Proposed non-substantive changes to other parts of the CFR
D. Effect of test procedure revisions on compliance with standards
III. Procedural Requirements
A. Review Under Executive Order 12866
B. Review Under the Regulatory Flexibility Act
C. Review Under the Paperwork Reduction Act
D. Review Under the National Environmental Policy Act
E. Review Under Executive Order 13132
F. Review Under Executive Order 12988
G. Review Under the Unfunded Mandates Reform Act of 1995
H. Review Under the Treasury and General Government Appropriations Act of 1999
I. Review Under Executive Order 12630
J. Review Under the Treasury and General Government Appropriations Act of 2001
K. Review Under Executive Order 13211
L. Review Under Section 32 of the Federal Energy Administration (FEA) Act of 1974
IV. Public Participation
A. Attendance at Public Meeting
B. Procedure for Submitting Requests to Speak
C. Conduct of Public Meeting
D. Submission of Comments
E. Issues on Which DOE Seeks Comment
V. Approval of the Office of the Secretary

I. Summary of the Proposed Rule

A. Overview

DOE completed a multi-year rulemaking process to update the DOE test procedure for residential central air conditioners and heat pumps on October 11, 2005, when it published an amended test procedure in the **Federal Register**. (70 FR 59122) (Hereafter referred to as the October 2005 final rule.) Today's notice initiates a new rulemaking that addresses several test procedure issues that were identified too late in the prior rulemaking to allow stakeholders an opportunity to comment on them. The October 2005 final rule was concerned almost exclusively with Appendix M to Subpart B (the test method proper), which was completely replaced. Today's revision has significant updates to Subpart B itself, in 10 CFR section 430.24 (units to be tested). These revisions concern topics such as the alternative rating method used to provide efficiency ratings for untested split system combinations, data submission requirements, and sampling requirements. There are also revisions to the test procedure proper in

Appendix M. These revisions have no common theme. Most are concerned with improving the accuracy of the test procedure, and with extending coverage to new central air conditioner features.

B. Authority

Part B of Title III of the Energy Policy and Conservation Act (EPCA or the Act) establishes the Energy Conservation Program for Consumer Products Other Than Automobiles (Program). (42 U.S.C. 6291 *et seq.*) The products currently subject to this Program (''covered products'') include residential central air conditioners and heat pumps, the subject of today's notice.

Under the Act, the Program consists of three parts: testing, labeling, and the Federal energy conservation standards. The Federal Trade Commission (FTC) is responsible for labeling, and DOE implements the remainder of the program. The Department, in consultation with the National Institute of Standards and Technology (NIST), is authorized to establish or amend test procedures as appropriate for each of the covered products. (42 U.S.C. 6293) The purpose of the test procedures is to measure energy efficiency, energy use, or estimated annual operating cost of a covered product during a representative, average use cycle or period of use. The test procedure must not be unduly burdensome to conduct. (42 U.S.C. 6293(b)(3)) The central air conditioner and heat pump test procedures appear in title 10 of the Code of Federal Regulations (CFR), part 430, subpart B, Appendix M.

If a test procedure is amended, DOE is required to determine to what extent, if any, the new test procedure amendments would alter the measured energy efficiency of any covered product as determined under the existing test procedure. (42 U.S.C. 6293(e)(1)) If DOE determines that an amended test procedure would alter the measured energy efficiency of a covered product, DOE is required to amend the applicable energy conservation standard with respect to such test procedure. In determining any such amended energy conservation standard, DOE is required to measure the energy efficiency or energy use of a representative sample of covered products that minimally comply with the existing standard. The average efficiency or energy use of these representative samples, tested using the amended test procedure, constitutes the amended standard. (42 U.S.C. 6293(e)(2))

Beginning 180 days after a test procedure for a covered product is prescribed, no manufacturer, distributor, retailer, or private labeler may make representations with respect to the energy use, efficiency, or cost of energy consumed by such products, except as reflected in tests conducted according to the DOE procedure.

C. Background

The latest revision of the DOE test procedure for central air conditioners and heat pumps—which covers units having rated cooling capacities of less than 65,000 Btu/h—was published as a final rule on October 11, 2005 (70 FR 59122), effective April 10, 2006.

After the January 22, 2001, publication of the proposed rule for the above rulemaking, stakeholders urged additional test procedure revisions. On December 13, 2002, DOE received stakeholder views on these revisions during a public workshop. (Hereafter referred to as the December 2002 workshop.) Written comments were received from the American Council for an Energy-Efficient Economy (ACEEE), Unico, Inc., Carrier Corporation, Lennox International, York International, and the Air-Conditioning and Refrigeration Institute (ARI). In addition, five requests for test procedure waiver have been received from manufacturers of multi-split central air conditioners. These waivers are necessary because the current test procedure is inadequate for testing these products.

This test procedure revision addresses changes requested by stakeholders, either directly or through test procedure waiver requests. A full list of the changes appears in the next section. The primary reasons for these changes are: (1) To implement test procedure revisions that are needed because of new energy efficiency standards for small-duct, high-velocity (SDHV) systems; (2) to better address multi-split units test procedure waivers; and (3) to address sampling and rating issues that have been raised since the new minimum energy efficiency standards became effective on January 23, 2006.

D. Summary of the Test Procedure Revisions

Today's proposed rule includes twelve substantive changes to the test procedure in Appendix M. It includes eight substantive changes and four non-substantive changes to other parts of the CFR that concern rating of central air conditioners and heat pumps. The proposed test procedure changes are:

Proposed substantive changes to Appendix M:

1. Imposing higher minimum external-static-pressure requirements and adding test-setup modifications for testing small-duct, high-velocity systems. (Sections 2.2, 2.4.1, 2.5.4.2, and 3.1.4.1.2)

2. Reinstating the option of conducting a cyclic test at high capacity when testing a two-capacity unit. (Sections 3.2.3, 3.4, 3.5, 3.5.3, 3.6.3, 3.8, 3.8.1, 4.1.3.3, and 4.2.3.3)

3. Shortening the maximum duration of a Frost Accumulation Test on a two-capacity heat pump when it is operating at low capacity. (Section 3.9)

4. Using default equations to approximate the performance of a two-capacity heat pump operating at low capacity, instead of conducting a Frost Accumulation Test. (Section 3.6.3)

5. For modulating multi-split systems: Allowing indoor units to cycle off, allowing the manufacturer to specify the compressor speed used during certain tests, and introducing a new algorithm for estimating power consumption. (Sections 2.1, 2.2.3, 2.4.1, 3.2.4, 3.6.4, 4.1.4.2, and 4.2.4.2)

6. Extending the duct-loss correction to the indoor capacities used for calculating seasonal energy efficiency ratio (SEER) and heating seasonal performance factor (HSPF). (Sections 3.3, 3.4, 3.5, 3.7, 3.9.1, and 3.11)

7. Defining ''repeatable'' for cyclic tests. (Section 3.5)

8. Articulating a definition of ''standard air.'' (Definition 1.37)

9. Changing one of the cooling-mode outdoor test conditions for units having a two-capacity compressor. (Sections 3.2.3 and 4.1.3)

10. Renaming ''Cooling and Heating Certified Air Volume Rates'' to ''Full-load Air Volume Rates.'' (Definition 1.34)

11. Modifying the criterion for using an air volume rate that is less than the manufacturer's specified value. (Sections 3.1.4.1.1 and 3.1.4.4.3)

12. Revising references to ASHRAE Standards (e.g., Standards 23, 37 and 116) that have been reaffirmed (i.e., reviewed and approved by ASHRAE with no substantive changes) or revised too recently to have been included in the amended test procedure published on October 11, 2005.

Proposed substantive changes to other parts of the CFR that affect the testing and rating of residential central air conditioners and heat pumps:

1. New data-submission-requirements when verifying an alternative rating method. 10 CFR 430.24(m)(6).

2. Guidance on the inclusion of pre-production units in the sample population used to determine and validate the published ratings. 10 CFR 430.24.

3. Clarification of the sample population used to validate the rated

SEER and the rated HSPF. 10 CFR 430.24(m).

4. Clarification of the definition of a ''highest sales volume combination.'' 10 CFR 430.24(m)(2).

5. Upper limit on the difference between calculated and tested SEER and HSPF values. 10 CFR 430.24(m), 10 CFR 430.2.

6. Clarification of the published ratings for untested split-system combinations. 10 CFR 430.24.

7. Adding requirement that ratings for an air conditioner or heat pump that is rated with a furnace include the model number of that furnace as part of the overall equipment model number. 10 CFR 430.62(a)(4).

8. For products such as multi-splits which have multiple indoor units, instituting a ''tested combination'' as an alternative to testing the combination with ''the largest volume of retail sales.'' 10 CFR 430.24(m)(2), 10 CFR 430.2.

Proposed non-substantive changes to related portions of the CFR:

1. Clarification of a private labeler's (i.e., a third party) responsibility for ensuring that reported ratings are based on an approved alternative method for rating untested combinations or on laboratory test data. 10 CFR 430.24(m)(5).

2. Revisions to the definition of ''coil family.'' 10 CFR 430.2.

3. New definition for ''private labeler'' within § 430.2.

4. Definitions of terms: ''indoor unit,'' ''outdoor unit,'' ''ARM/simulation adjustment factor,'' and ''tested combination.'' 10 CFR 430.2.

An expanded discussion of each proposed substantive change is provided in the next section. The complete test procedure is not printed as part of today's proposed rule. Instead, only the specific sections of the test procedure and related parts of the CFR where changes are proposed are printed. These specific, proposed changes are set forth at the end of this notice.

II. Discussion

A. Proposed Substantive Changes to the Test Procedure in Appendix M

1. *Imposing higher minimum external-static-pressure requirements and adding test-setup modifications for testing small-duct, high-velocity systems.* Based on consideration of comments received at the December 2002 workshop, DOE today proposes minimum external-static-pressure levels for SDHV systems that are higher, by 1.0 inch of water, than the minimums that apply for all other units. For example, for equipment having rated cooling capacities from 29,000 to 42,500 Btu/h, the minimum external static pressures are 0.15 inches of water for conventional blower-coil systems and 1.15 inches of water for SDHV systems.

Changes to the test procedure that complement the proposed testing of SDHV systems at the higher external static pressures are also proposed today. Changes are proposed that pertain to both the equipment setup and the test setup. For example, because the external-static-pressure taps for the laboratory test setup are located downstream of the indoor unit, all balance dampers or restrictor devices on, or inside, the unit must be set fully open or on the lowest restriction setting. To avoid potential abuses of using static regain to meet the lab-measured, higher external-static requirements and to otherwise avoid attempts to qualify a conventional unit as a SDHV unit, limits are proposed to the size of the duct connected to the outlet of the indoor unit. For cases where a closed-loop, air-enthalpy test apparatus is used on the indoor side, DOE proposes to limit the airflow resistance on the inlet side of the indoor blower-coil to a maximum value of 0.1 inch of water. The balance of the airflow resistance shall be imposed on the supply side of the indoor blower. Such loading is consistent with a field application of a SDHV system and its smaller supply ducts and room diffusers. Finally, the test setup shall include an adjustable air damper that is positioned immediately upstream of the airflow measuring apparatus. This damper can minimize air leakage in the airflow measuring apparatus at points upstream of the flow nozzle by reducing the pressure difference between the duct and the surrounding ambient. A maximum differential of 0.5 inches of water is proposed. If practicable, the outlet air damper box used for cyclic tests can double as this adjustable air damper.

Regarding the above-proposed new requirements for equipment and test setup, only one was discussed at the December 13, 2002 workshop. This requirement concerns the distribution of the external resistance between the supply and return sides when using a closed-loop test setup. No attendee opposed this addition, and no opposing views were voiced in the written comments that followed. The other proposed additions were raised in written comments from Unico, Inc. (Unico), a SDHV manufacturer. (Unico, No. 7) [1]

A definition for SDHV systems was developed by industry members during the previous test procedure rulemaking, and was adopted as Definition 1.35 (10 CFR 430.2) in the October 2005 final rule. The combination of this definition, the higher, lab-verified minimum external-static-pressure requirements, and limits on supply-duct sizes provides a safeguard against conventional systems being classified improperly as SDHV systems.

Today's proposed rule does not include changes to the definition of ''SDHV system.'' The requirement remains that all SDHV systems must be capable of operating at an external static pressure of 1.2 inches of water, or higher, at their Full-Load Air Volume Rate. During the brief discussion of this issue at the December 2002 workshop, there was support for making the definition congruent with the newly proposed testing requirements (Public Hearing Tr., pages 20, 69). However, DOE believes that the difference between the definition (fixed-minimum external static pressure of 1.2 inches of water) and the test procedure requirement (variable-minimum external static pressure of 1.1–1.2 inches of water, depending on capacity) is acceptable. Any unit meeting the definition can be tested under the test procedure. The test procedure's variable-minimum, external-static-pressure requirements reflect similar variable static-pressure requirements for conventional systems. The only effects of changing the definition to incorporate a variable-minimum, external-static-pressure requirement would be to make the definition more complicated and somewhat less stringent. DOE has determined that it would not improve the current definition of ''SDHV system'' if DOE made it congruent with the newly proposed lab testing requirements.

The DOE's Office of Hearings and Appeals (OHA) issued a decision and order on May 24, 2004, that requires SDHV systems manufactured on or after January 23, 2006, to achieve SEER and Heating Seasonal Performance Factor (HSPF) ratings that are not less than 11.0 and 6.8, respectively. While the changes proposed today would change the measure of energy efficiency for SDHV units, the amendments proposed were known by OHA and taken into consideration when OHA issued exceptions to the central air conditioner

[1] A notation in the form ''Unico, No. 7 at 4'' identifies a written comment DOE received in this rulemaking. This notation refers to a comment (1) by Unico, (2) in document number 7 in the docket in this matter, and (3) appearing at page 4 of document number 7. No page number may be cited if it is not needed because of the brevity of the comment, or, as here, the comment is in the form of a series of e-mails.

standards for SDHV units.[2] DOE expects that the test procedure amendments, as proposed, will not cause any SDHV product to become noncompliant with the energy efficiency standards for SDHV units set by OHA. DOE requests comments on the proposed changes, whether they will change the measure of energy use and whether they will cause any SDHV model to be non-compliant with DOE's energy efficiency standards. In particular, DOE requests stakeholders to submit lab test results that show the impact of these changes on the measure of efficiency and on compliance with the standard.

The specific changes proposed within the DOE test procedure that pertain to the above discussion on SDHV systems appear in sections 2.2, 2.4.1, 2.5.4.2, and 3.1.4.1.2 of the central air conditioner and heat pump test procedure.[3]

2. *Reinstating the option of conducting a cyclic test at high capacity when testing a two-capacity unit.* Beginning with the January 17, 1980, effective date of the DOE test procedure for central air conditioners and heat pumps, the test procedure provided a rarely used option of conducting cyclic testing at high capacity on two-capacity units. The October 2005 final rule eliminated the option of testing to obtain a cyclic-degradation coefficient for high capacity, $C_D(k = 2)$ and instead assigned the coefficient the same value as the cyclic-degradation coefficient for low capacity, $C_D(k = 2) = C_D(k = 1)$, in order to simplify the test procedure. The change, however, caused some two-capacity units (i.e., ones that lock out low capacity at certain outdoor temperatures) to lose a small SEER or HSPF rating boost, usually in the 0.1 range, that would have been gained by the optional test. There are cases where a 0.1 boost in SEER or HSPF would be of great value to a manufacturer. Thus, today's proposed rule includes the option of testing to determine the high-capacity C_D. Assigning the value for the low-capacity C_D as the high-capacity C_D now becomes the default option instead of testing at high capacity. Reinstating the option of testing to determine the high-capacity C_D was supported at the December 2002 workshop (Public Hearing Tr., pages 67–68).

The specific changes proposed within the DOE test procedure that pertain to the reinstatement of the optional, high-capacity cyclic tests are shown in sections 3.2.3, 3.4, 3.5, 3.5.3, 3.6.3, 3.8, 3.8.1, 4.1.3.3, and 4.2.3.3 of the central air conditioner and heat pump test procedure.

3. *Shortening the maximum duration of a Frost Accumulation Test on a two-capacity heat pump when it is operating at low capacity.* A frost accumulation test at low capacity is required if the heat pump cycles between low and high heating capacities while matching the building load at temperatures of 37°F and lower. Completing such a frost accumulation test, as presently specified, can be difficult, as discussed below. DOE is proposing changes that seek to reduce the test burden, while avoiding changing the measure of HSPF.

During a frost accumulation test, the official test period lasts for one complete cycle, from defrost termination to defrost termination—or 12 hours, whichever occurs first. Most heat pumps conduct a complete cycle well in advance of the 12-hour time limit, at least with single-speed units or two-capacity heat pumps operating at high capacity. When running a frost accumulation test at low capacity, however, the outdoor coil builds frost more slowly or not at all. As a result, frost accumulation tests on two-capacity heat pumps having a demand defrost and running at low capacity take much longer to complete, potentially requiring the full 12 hours—that is, if the test condition tolerances can be maintained over the extended period.

The frost accumulation test conditions are, in themselves, a challenge to maintain. The task is more difficult when testing a two-capacity heat pump at low capacity. The test-room air reconditioning system has to be sized to accommodate high-capacity operation and so is more likely mismatched and oversized. The level of difficulty also increases because of having to maintain the test-room tolerances over a comparatively longer period. More opportunity exists for a perturbation in the operation of the heat pump or the test-room reconditioning system to shift the test conditions beyond the allowed tolerances.

Three related modifications to the test procedure were discussed at the December 2002, workshop. The first option is to change the maximum test interval from 12 hours to either 3 or 6 hours. A second option is to state in the test procedure that the controls of the heat pump may be overridden during frost accumulation tests at low capacity in order to force a defrost cycle prior to 12 hours. In this case, the manufacturer would specify the time interval after which defrost would be manually initiated. The third option is to add a default equation that could be used instead of running the test.

The rationale for the first option comes from draft revisions of International Standards Organization (ISO) standards that cover the testing and rating of residential heat pumps and air conditioners, ISO Standards 5151 and 13253. (ISO/DIS 5151R, Non-ducted Air Conditioners and Heat Pumps—Testing and Rating for Performance; ISO/DIS 13253R, Ducted Air Conditioners and Air-to-Air Heat Pumps—Testing and Rating for Performance) Currently, these draft revisions call for all heating-capacity tests to last a maximum of three hours when using the air-enthalpy test method. The second option would be an extension of the procedure that was instituted in the October 2005 test procedure to handle heat pumps that use history-dependent demand-defrost controls. The manually initiated option was invoked to avoid running an excessive number of cycles before repeatable defrost cycles occurred. The third option is consistent with the existing alternative allowed when testing variable-speed heat pumps. Instead of running frost accumulation tests at both the intermediate speed and at maximum speed, the manufacturer has the option of using a specified equation to approximate the maximum-speed heating capacity and average power at 35°F outdoor temperature.

At the December 2002 workshop, two manufacturers, Trane and Copeland, spoke in favor of the default equation (Public Hearing Tr., pages 62–63). Ducane spoke in favor of a shorter maximum test time, 6 hours instead of 12 hours (Public Hearing Tr., page 62). ACEEE expressed a desire for making no change that ultimately discourages innovation (Public Hearing Tr., page 64). York favored letting the manufacturer specify the duration of the heating cycle (Public Hearing Tr., page 65). There was also a discussion of making the third option, which is a default equation, the default procedure. It was suggested that if a manufacturer wanted to test, it could use either the first or second option (Public Hearing Tr., page 66).

After considering recommendations from NIST, based on its experience, and discussions with industry members familiar with running frost accumulation tests, DOE believes that if

[2] *SpacePak/Unico,* 29 DOE ¶ 81,002 (2004).

[3] For the aid of the reader, the January 1, 2006, CFR includes both the central air conditioner test procedure as it existed prior to the October 2005 final rule (Appendix M to Subpart B of 10 CFR Part 430) and the test procedure as it exists as a result of the October 2005 final rule (Appendix M, Nt. to Subpart B of 10 CFR Part 430). References to the central air conditioner and heat pump test procedures in today's proposed rule are to the test procedure as it exists as a result of the October 2005 final rule (Appendix M, Nt. to Subpart B of 10 CFR Part 430). It is referred to as either the central air conditioner and heat pump test procedure or the October 2005 test procedure.

a heat pump has not defrosted in six hours, it is either (1) not building frost or (2) is completely frosted and probably has been so for more than half of the interval. In both cases, the benefits from continuing to run the test past 6 hours are none to minimal. For the ''not-building-frost'' case, extending the test is going to have virtually no impact on the average heating capacity and average power consumption. For the ''completely frosted'' alternative, the tested values of average performance might diminish, but at such a slow rate as to be insignificant.

Any benefit from an extended frost accumulation test, in addition, is further reduced because of the comparatively smaller impact of a low-capacity frost accumulation test on HSPF. The results of the low-capacity frost accumulation test affect low-capacity performance for the 22, 27, 32, and 37°F temperature bins. For two-capacity heat pumps, operating time over this bin temperature range is typically split between low and high capacities rather than being exclusively at low capacity.

DOE believes a reduction in the manufacturers' test burden is merited and that any change in the measure of HSPF will be negligible. Thus, DOE today proposes that the maximum duration of a frost accumulation test at low capacity be changed from 12 hours to 6 hours. This test procedure change is shown in section 3.9 of the central air conditioner and heat pump test procedure.

4. *Using default equations to approximate the performance of a two-capacity heat pump operating at low capacity, instead of conducting a Frost Accumulation Test.* This section builds on the discussion of the previous section. Although the proposed amendment discussed above will reduce the test burden, DOE believes the test burden remains considerable, especially if HSPF is relatively insensitive to the performance data derived from the test. One example would be a two-capacity heat pump that locks out low-capacity operation at outdoor temperatures lower than 35 °F. Such a lockout feature would result in the average capacity and power consumption from the low-capacity frost accumulation test being used only for 37 °F-bin calculations.

DOE is amenable to allowing an alternative to conducting a low-capacity frost accumulation test as long as the alternative yields conservative estimates of average capacity and power consumption. DOE has not been able to obtain information on typical performance degradation at frosting conditions. Data is needed to quantify how much the heat pump's performance at low-capacity and 35 °F outdoor temperature departs from the average capacity and power derived from linearly interpolating between the steady-state-heating-performance data at 47 and 17 °F. Lacking such data, DOE is following the recommendation made at the December 2002, workshop and proposes using the same default equations that it permits for variable-speed heat pumps in lieu of running a frost accumulation test at maximum speed. These equations estimate that the average heating-capacity and power-consumption values will be 90 percent, and 98.5 percent, respectively, of the interpolated, steady-state values. These percentages, when applied to low-capacity operation, provide conservative estimates of performance and are proposed in this rulemaking.

DOE prefers to have current laboratory data on which to base the selected conservative defaults. Thus, DOE requests that the industry share its results from testing two-capacity heat pumps at low capacity for the 47, 35, and 17 °F test conditions. The change, as proposed, is shown in section 3.6.3 of the central air conditioner and heat pump test procedure.

5. *For modulating multi-split systems: allowing indoor units to cycle off, allowing the manufacturer to specify the compressor speed used during certain tests, and introducing a new algorithm for estimating power consumption.* Certain parts of the current test procedure are poorly suited for testing and rating modulating multi-splits. In particular, three areas where shortcomings exist are (1) the requirement that all indoor coils operate during all tests, (2) the selection of the modulation levels for conducting tests on variable-speed systems (maximum, minimum, and a specified intermediate speed), and (3) the calculation algorithm for estimating performance over the intermediate speed/capacity range. The first area of concern results from a requirement developed for mini-split systems and then wrongly extended to multi-split systems. The second and third shortcomings stem from test levels and a calculation algorithm that are reasonable for one-condenser-to-one-evaporator-coil, variable-speed units but less suited for multi-splits.

In an effort to incrementally improve the test procedure's coverage of multi-splits, DOE proposes: (1) Allowing one or more indoor coils to cycle off during any test, if this occurs in normal operation, (2) allowing the manufacturer to specify the compressor speed used during the minimum-capacity and intermediate-speed tests, and (3) introducing a different algorithm for estimating power consumption in the intermediate-speed range. Another test procedure change is to remove the limitation on the use of only one indoor test room. Using two or more indoor test rooms may provide the flexibility needed to test certain multi-splits as complete systems. DOE recognizes that this change, however, will not be a solution to the prevailing problem where many multi-split systems cannot be lab tested, even in the most versatile test facility, due to the too-large number of indoor coils.

The allowance for turning off one or more indoor coils during any lab test, if this occurs in normal operation, will more likely be relevant during the intermediate and minimum speed/capacity tests. However, one or more indoor coils may not operate during a maximum-capacity test if the particular multi-split is configured using multiple indoor coils whose cumulative rated capacities exceed the rated capacity of the outdoor unit. During testing, DOE proposes that indoor coils that are cycled off be isolated in order to avoid any induced space conditioning, so that the aggregated, measured capacity includes no contribution from an inactive coil.

At the December 2002 workshop, and in the comments following the workshop, stakeholders did not make any objection to testing multi-splits in the lab in a manner more representative of field operation. (Public Hearing Tr., page 54) Allowing on/off control of indoor coils in the lab is consistent with this position.

As for the two other amendments relating to multi-splits that are proposed in this notice, a brief review of background information is helpful. Within the DOE test procedure, variable-speed air conditioners and heat pumps were first covered as a result of amendments to the central air conditioner and heat pump test procedures published by DOE in 1988. (53 FR 8304, March 14, 1988) These amendments addressed the designs of variable-speed systems marketed at the time: split systems having a single indoor coil and a single outdoor coil (*i.e.*, one-condenser-to-one-evaporator-coil systems). These systems could typically modulate, such that minimum-speed operation corresponded to capacities in the range of 40 to 60 percent of the maximum-speed capacity. More importantly, for the operating region where the unit modulates to produce a capacity equal to the building load, these systems operate most efficiently at the minimum speed with efficiency monotonically decreasing as the system ramped to maximum speed.

Further, because EER and COP are more linear than power consumption, DOE used efficiency as the parameter for interpolating within the DOE test procedure.[4]

The range of modulation of multi-splits is greater than for any previously evaluated one-condenser-to-one-evaporator-coil, variable-speed system. Most multi-splits can modulate their capacity to levels approaching 10 percent of rated capacity. Rated capacity, for some multi-splits, can be 5 to 10 percent lower than their maximum capacity, thus adding to the actual range of modulation. Multi-split manufacturers have informed DOE and NIST that both the minimum and maximum operating capacities correspond to points of declining efficiency with peak efficiency typically occurring in the 50-to-70 percent speed/capacity range. Thus, for a fixed set of ambient conditions, the efficiency-versus-modulation curve is expected to be hump-shaped.

The central air conditioner and heat pump test procedure's current algorithm calls for fitting a second-order polynomial (i.e., quadratic equation) to the efficiency values for the three available data points: the minimum-speed balance point, the intermediate-speed balance point, and the maximum-speed balance point. The curve fit is used to obtain an estimate of efficiency over the outdoor temperature range where the unit would modulate to provide a space conditioning capacity that equals the building load. Power consumption at any intermediate speed operating point is derived from the paired capacity and efficiency values (i.e., power = building load/EER) corresponding to the chosen outdoor (bin) temperature.

The above algorithm is well suited for one-condenser-to-one-evaporator-coil, variable-speed systems because the intermediate-speed, efficiency-versus-modulation data is monotonic and nearly linear. Due to insufficient data, DOE cannot quantify the value of using the algorithm with multi-split units. In the worst case, multi-split efficiency may deviate significantly from the balanced, parabolic shape that would be predicted by the second-order-polynomial fit. Another potential problem is that the efficiency at the intermediate-speed balance point will likely not be the peak efficiency point. As a result, the predicted peak efficiency is defined by the curve fit and not verified in the lab. The algorithm is not well suited for multi-split units, because the predicted efficiency curve may overestimate the performance of one unit while underestimating the performance of another unit.

DOE seeks data showing how the capacity and power consumption of multi-split units vary as a function of the modulation level and outdoor test conditions. Lacking such data, DOE proposes to calculate steady-state efficiency (EER and COP) over the intermediate-speed range using piece-wise linear fits: a line connecting the minimum- and intermediate-capacity balance points and a line connecting the intermediate- and maximum-capacity balance points. The linear fits should yield a conservative estimate of performance but are favored because of concern that the second-order fit may provide poor and most-likely inflated estimates.

Associated with the proposal to use a piece-wise linear fit of steady-state efficiency, DOE also proposes that the multi-split manufacturer shall specify the system capacity (i.e., compressor speed, indoor coil configurations, fan speeds, etc.) used for the cooling and heating intermediate speed/capacity tests. This change is being proposed so that the manufacturer has an opportunity to verify the peak-efficiency capabilities of the multi-split unit being tested. Defining two other capacities, maximum and minimum, are the last points specific to this multi-split discussion.

DOE proposes that multi-splits be tested at their maximum capacity (maximum compressor speed), or full load, not their rated capacity. The tested compressor speed shall be the maximum for continuous duty operation as allowed by the unit's controls. For clarity, this tested capacity is not a ''turbo'' mode where a higher operating speed(s) is allowed but for only a limited time interval. This clearer definition of the maximum speed/capacity test applies to all variable-speed systems, not just multi-splits.

DOE considered an alternative approach of allowing the manufacturer to specify the compressor capacity/speed used for maximum-capacity tests. However, in use, the variable-capacity system operates at capacities/speeds above this rated capacity. DOE's goal is to specify tests that yield a performance map that is as encompassing and representative as possible. Specifying the maximum-capacity tests as proposed in this notice is consistent with this goal. The approach is also consistent with the full-load testing approach taken in comparable ISO standards, 13253, 5151, and 15042. (ISO/DIS 15042P, Multi-split System Air-Conditioners and Air-to-Air Heat Pumps—Testing and Rating for Performance)

DOE next considered the option of allowing an additional test at the manufacturer's rated cooling capacity, for the sole purpose of defining the building load line used for the SEER bin calculations. DOE decided not to introduce this option due to possible confusion from having two SEER's. There could be one SEER based on a building load line tied to the unit's performance at the A-Test condition at maximum capacity, and a second SEER based on the load line derived using the rated capacity at the A-Test conditions. Manufacturers of variable-capacity systems, including multi-splits, can still show the impact of sizing the unit based on a rated capacity.

From a testing standpoint, conducting tests at the true minimum capacity, possibly 10 percent of full load, is difficult. The test room reconditioning system has difficulty operating against such low loads and maintaining test conditions within tolerance. Thus, the multi-split's performance at its true minimum capacity may have to be determined by extrapolation of test data collected at higher capacities where the tests are more easily conducted. In this case, some short test would be needed to verify the true minimum operating capacity of the multi-split. Alternatively, SEER and HSPF could be calculated based only on the operational range verified in the steady-state lab tests. For example, if a multi-split were tested at 30 percent of capacity even though it was reportedly able to ramp down to 10 percent of capacity, the SEER and HSPF calculations would be conducted assuming that the unit would cycle on and off at building loads that fell below the 30 percent capacity curve.

DOE proposes that the minimum-capacity test be conducted at a capacity specified by the manufacturer. The operating level can be either the equipment's true minimum or a capacity that is greater than the true minimum but nonetheless chosen by the manufacturer as its designated minimum capacity. DOE prefers that multi-split manufacturers specify a tested minimum capacity for which test-room tolerances are readily maintainable. As with the maximum-capacity test, the tested capacity shall be one that the unit could maintain indefinitely, if needed. DOE further proposes that SEER and HSPF shall be calculated assuming that the tested minimum capacity corresponds to the actual minimum capacity. Extrapolation

[4] Domanski, Piotr A., ''Recommended Procedure for Rating and Testing of Variable Speed Air Source Unitary Air Conditioners and Heat Pumps,'' NBSIR 88–3781, National Institute of Standards and Technology, May 1988.

of performance data will not be permitted for the case where the tested minimum is actually higher than the true minimum. DOE, however, is open to comments on how to verify the true minimum-capacity operation such that extrapolation of performance data could be incorporated.

At the December 2002 workshop, Trane recommended that a multi-split manufacturer make a recommendation on the new test points, possibly through a waiver petition (Public Hearing Tr., pages 55–56). Copeland, and to a certain extent, ACEEE, expressed concern that multi-splits may be difficult to test with the DOE test procedure for central air conditioners and heat pumps (Public Hearing Tr., pages 58–61). Since the workshop, DOE has received four waiver petitions from manufacturers of residential multi-split systems. All four petitions take the approach of seeking waivers from the DOE test procedures due to shortcomings in the test procedure (*e.g.*, no credit for a simultaneous heating and cooling mode), the lack of an alternative method for rating untested combinations, and the fact that many multi-split combinations simply cannot be lab tested because they have too many indoor coils. These limitations are among those multi-split issues that will be addressed in the future.

The changes proposed in this notice are offered to address some of the test procedure shortcomings pertaining to residential multi-split units. At this time, DOE prefers to pursue covering multi-splits within the central air conditioner and heat pump test procedure rather than pursue development of a ''multi-split-only'' test procedure. DOE welcomes comments on the proposed test procedure changes. For those that feel multi-split systems are so different as to merit coverage in a separate test procedure, DOE asks that they provide suggestions on the possible structure of such a test procedure.

The specific changes proposed within the DOE test procedure that pertain to the above discussion on multi-split systems are shown in sections 2.1, 2.2.3, 2.4.1, 3.2.4, 3.6.4, 4.1.4.2, and 4.2.4.2 of the central air conditioner and heat pump test procedure.

6. *Extending the duct-loss correction to the indoor capacities used for calculating SEER and HSPF.* In the recently published test procedure final rule, a capacity correction for duct losses was added. This correction was added for compatibility with existing industry practice. Regrettably, the correction was applied too narrowly. As published, the correction was only used when evaluating whether the required 6-percent energy balance was achieved between the primary and secondary test methods for measuring capacity. The correction is also to be used to adjust the indoor capacities used in calculating SEER and HSPF. Today's proposed rule includes this corrective action, with one exception. The exception applies to the two indoor capacities used for calculating a cyclic-degradation coefficient, CD. The effort involved in accounting for the duct losses, especially during a cyclic test, is judged as overly burdensome, given the adjustment's small effect. Its impact is further reduced because the CD calculation only requires the ratio of the two indoor capacities. Duct losses are minimal because the test procedure requires that the supply ductwork be insulated to an R–19 level.

This topic spurred little discussion at the December 2002 workshop. In fact, the only related substantive discussion was whether the correction could be made within the then-pending final rulemaking. DOE spoke in favor of the issue being considered in a second, separate rulemaking, and so it is included here. The specific changes proposed within the DOE test procedure that pertain to the above discussion are shown in sections 3.3, 3.4, 3.5, 3.7, 3.9.1, and 3.11 in the central air conditioner and heat pump test procedure.

7. *Defining ''repeatable'' for cyclic tests.* In the October 2005 final rule, the following requirement is provided in section 3.5e regarding the duration of a cyclic test: ''After completing a minimum of two complete compressor OFF/ON cycles, determine the overall cooling delivered and total electrical energy consumption during any subsequent data collection interval where the test tolerances given in Table 8 are satisfied.'' (70 FR 59122) Many test laboratories, however, let the test continue until the results are repeatable. These laboratories take extra time to make sure that they have it right; they go further than the specified ''one good interval and done'' test procedure requirement.

In today's proposed rule, DOE proposes to include the additional requirement that repeatable results be obtained before terminating a cyclic test. DOE plans to follow industry practice for what qualifies as ''repeatable.'' At the December 2002 workshop, two attendees spoke to this issue (Public Hearing Tr., pp. 42–43). After the workshop, NIST discussed the issue with these two attendees, Excel Comfort Systems (Excel) and Intertek Testing Services (ITS). Excel indicated that it typically runs 5 OFF/ON cycles and compares the Γ, the time-integrated temperature difference on the indoor side, from each ''on'' cycle. The goal is to have the Γ values vary by 0.04 °F·hr or less. ITS looks at two parameters when making a judgment on repeatable cycles. On the capacity side, ITS seeks consecutive cycles in which the average indoor side air temperature difference changes by 0.3 °F or less. On the input side, ITS seeks consecutive cycles where the average system power consumption for the complete OFF/ON interval changes by 5 watts or less. The ITS criterion for capacity is slightly less stringent than the Excel Comfort Systems criterion. The input side criterion imposed by ITS offsets this slight difference.

DOE favors defining ''repeatable results'' in terms of both the unit's average capacity (i.e., using the integrated temperature difference) and its average power consumption. As compared to the above two industry members and their respective in-house criteria, DOE today proposes comparatively looser target levels. They are: Γ values that vary by 0.05 °F·hr or less; and consecutive cycles where the average system power consumption changes by 10 watts or less. See section 3.5 of the test procedure for the specific changes proposed on implementing and defining repeatable results for a cyclic test.

8. *Articulating a definition of ''standard air.''* The October 2005 final rule contains a definition for ''standard air'' (see § 1.37, Appendix M, Nt. to Subpart B of 10 CFR part 430). This definition was, at the time, consistent with the definition contained in the public review draft of ASHRAE Standard 37–1988R (see 10 CFR 430.22(5)3). During the public review process, the definition in the ASHRAE Standard was modified to highlight that mass density is the key defining parameter, not the combination of the dry air's temperature and pressure. DOE proposes to amend its definition of ''standard air'' so that it matches the definition that appears in ASHRAE Standard 37–2005. This change is included among the list of substantive changes to emphasize that consistency with the revised ASHRAE standard language causes standard air volume rates to be expressed in terms of dry air, not moist air. The proposed update is shown in the definition of ''standard air'' in section 1.37 of the central air conditioner and heat pump test procedure.

9. *Changing one of the cooling-mode outdoor test conditions for units having a two-capacity compressor.* To minimize the testing burden, the

cooling-mode tests for air conditioners and heat pumps having a two-capacity compressor are conducted only at 82 °F and 95 °F outdoor-dry-bulb temperatures. The 82 °F and 95 °F test conditions tend to bracket the key temperature bins in which maximum compressor capacity most affects the SEER bin calculation. By comparison, the 82 °F and 95 °F test conditions span a range that tends to be higher than the key temperature bins in which minimum compressor capacity most affects the SEER bin calculations. As a result, for the lowest outdoor temperature bins (i.e., 67 °F, 72 °F, and 77 °F), cooling capacity and electrical power consumption at low (stage) compressor capacity are derived from linearly extrapolating the 82° and 95 °F test results. These extrapolated capacities and powers are more susceptible to inaccuracies and, unfortunately, can potentially reward poor performance. In the latter case, for example, increased electrical power consumption during the A_1 Test at 95 °F and low compressor capacity could potentially result in a higher SEER. The higher power consumption for the A_1 Test could cause the power consumption for the heavily weighted 67 °F, 72 °F, and 77 °F bins to be underestimated to the point that they more than offset the higher power consumptions for 87 °F and higher temperature bins.

In today's proposed rule, DOE proposes to change the outdoor conditions used for certain tests on two-capacity air conditioners and heat pumps. The first change is the elimination of the steady-state A_1 Test at 95 °F outdoor temperature. Instead, two-capacity units will now be tested at an outdoor-dry-bulb temperature of 67 °F, and in those few cases where it applies, at an outdoor-wet-bulb temperature of 53.5 °F. The results from this new steady-state test, designated the F_1 Test, shall be used in conjunction with the results from the current low-capacity test at 82 °F outdoor-dry-bulb temperature (i.e., the B_1 Test) to determine the low-capacity cooling capacity and power consumption values used in SEER bin calculations. With this change, those outdoor temperature bins where low-capacity operation dominates will now be more accurately derived by interpolating, as opposed to extrapolating.

The above change caused DOE to consider two additional changes. Currently, the two tests used to determine the low-capacity, cooling-mode cyclic-degradation coefficient, $C^c_D(k=1)$, are conducted at 82 °F outdoor-dry-bulb temperature. Given the change to 67 °F outdoor-dry-bulb temperature for one wet-coil steady-state test, DOE also proposes to conduct the two dry-coil tests at 67 °F. These changes make the test conditions for two-capacity units consistent with the test conditions specified for variable-speed systems. These two additional 67 °F tests are denoted by the same identifiers used for the comparable variable-speed tests: The optional dry-coil steady-state test is the G_1 Test and the optional dry-coil cyclic test is the I_1 test.

The specific changes proposed within the DOE test procedure pertaining to new outdoor test conditions for one required, and two optional, cooling mode tests for two-capacity units are shown in sections 3.2.3 and 4.1.3 of the test procedure. These changes are combined with DOE's earlier proposal to reinstate the two optional dry-coil tests at high capacity.

10. *Renaming ''Cooling and Heating Certified Air Volume Rates'' to ''Full-load Air Volume Rates.''* The October 2005 final rule introduced proper names for the air volume rates associated with the many tests that are described in the test procedure. The name given to the air volume rate that is used during most tests was ''Certified Air Volume Rate,'' prefixed with the qualifier ''Cooling'' or ''Heating.'' Typically, the word ''certified'' is used within the industry to identify parameters that are subject to verification checks and, if appropriate, penalties for failure to comply with the rules for accurately reporting the certified parameter. Examples of such certified parameters are SEER, HSPF, and rated capacity. To avoid confusion on whether air volume rate is a ''certified parameter''—which it is not—DOE proposes substituting the word ''Full-load'' for ''Certified'' within the proper name of the particular air volume rate. DOE considered other substitutes, including ''Nominal,'' ''Rated,'' ''Tested,'' and ''Target.'' DOE welcomes comments on alternative substitutes. In addition, DOE seeks comments on instituting this change within the definition for small-duct, high-velocity systems in section 1.35 of the central air conditioner and heat pump test procedure.

11. *Modifying the criterion for using an air volume rate that is less than the manufacturer's specified value.* The October 2005 final rule rigidly specified the air volume rate to use during each test. In particular, DOE definitively stated in section 3.1.4.1.1 of the central air conditioner and heat pump test procedure that there are only two circumstances in which the test lab could use an air volume rate that is less than the manufacturer's specified value. The criterion for these circumstances, which applies to ducted blower-coil systems having a fixed-speed, multi-speed, or variable-speed, variable-air-volume-rate indoor fan, is reexamined in this rulemaking.

The first lab test is the A or A_2 Test (except for heating-only heat pumps). For this test, the unit must generate an external static pressure that is equal to or greater than the applicable value listed in the test procedure: 0.10, 0.15, or 0.20 inches of water, the value being assigned based on the unit's (expected) rated cooling capacity. When running the A or A_2 Test, the test lab will either achieve the manufacturer's specified air volume rate and observe the corresponding external static pressure, or it will achieve the specified minimum external static pressure and observe the air volume rate. If this check indicates that the indoor unit, as configured, cannot provide the manufacturer's specified air volume rate and meet the minimum external-static requirement, the central air conditioner and heat pump test procedure (section 3.1.4.4.3a) says to ''incrementally change the setup of the indoor fan (e.g., fan motor pin settings, fan motor speed) until the Table 2 [minimum static] requirement is met while maintaining the same [target] air volume rate.'' The central air conditioner and heat pump test procedure continues, in the section cited above: ''If the indoor fan setup changes cannot provide the minimum external static, then reduce the air volume rate until the correct Table 2 minimum is equaled.'' This last case covers one of two cases where the test lab can use an air volume rate that is less than the value specified by the manufacturer. The second case is the more global stipulation to set the air volume rate to 37.5 scfm per 1000 Btu/h if the manufacturer's specified air volume rate yields a higher ratio.

Since the publication of the final rule, DOE now understands that this approach is too rigid and is inconsistent with industry practice. Specifically, although the test requirement to achieve the minimum external static pressure has been universally upheld, the requirement that this be done by first changing the motor's speed has not been universally employed. In particular, for cases in which the specified minimum external static pressure is achieved at an air volume rate that is slightly less than the value specified by the manufacturer, the testing customarily proceeds using this slightly lower air volume rate rather than increasing the speed setting of the fan motor.

The desired approach should account for normal equipment tolerances and variability, and should be compatible with allowing the manufacturer to specify an air volume rate representative of the average indoor unit, for each indoor unit model. The current, more rigid, approach causes manufacturers to specify an air volume rate at the low end of the range for a typical model.

Because the current algorithm does not account for the inherent variability in fan motors, housings, and wheels, DOE proposes to add an overall tolerance when assigning the indoor-air volume rate used for testing. This change will result in more representative testing, because of the use of an average air volume rate, rather than a rate on the low end of the range. DOE proposes to assign a tolerance of −5 percent on the air volume rate specified by the manufacturer. Thus, if the indoor unit can attain the minimum external static pressure while operating at an indoor air volume rate that is between 0 and −5 percent of the manufacturer-specified value, then this lab air volume rate shall be used. The tolerance of −5 percent is recommended because it is representative of indoor blower variations and also because a maximum tolerance of −5 percent in air volume rate typically causes a change in total capacity that is within the uncertainty of the measurement.

Proposed language for effecting the above change is provided in the last section of this notice as part of the revised section 3.1.4.1.1 of the central air conditioner and heat pump test procedure and, for ducted, heating-only heat pumps, section 3.1.4.4.3. DOE requests comments on the approach of including the tolerance within the setup algorithm, and assigning it as a one-sided tolerance. DOE also requests data concerning the selection of −5 percent as the tolerance.

12. *Revising references to ASHRAE Standards (e.g., Standards 23, 37, 116) that have been reaffirmed (i.e., reviewed and approved by ASHRAE with no substantive changes) or revised too recently to have been included in the amended test procedure published on October 11, 2005.* ASHRAE Standard 23, ''Methods of Testing for Rating Positive Displacement Refrigerant Compressors and Condensing Units,'' and Standard 37 ''Methods of Testing for Rating Unitary Air-Conditioning and Heat Pump Equipment'' completed the revision, public review, and publication process in 2005. ASHRAE Standard 116, ''Methods of Testing for Rating for Seasonal Efficiency of Unitary Air Conditioners and Heat Pumps,'' completed the reaffirmation, public review, and publication process in 2005. When an ASHRAE standard is revised, substantive changes are made. Reaffirmations, by comparison, contain only non-substantive changes and so do not alter the technical content of the document. To DOE's knowledge, the proposal to reference these current versions of the three ASHRAE standards will not affect the SEER and HSPF ratings calculated using the current or proposed DOE test procedure.

B. Proposed Substantive Changes to Other Parts of the CFR That Affect the Testing and Rating of Residential Central Air Conditioners and Heat Pumps

1. *New data-submission-requirements when verifying an alternative rating method.* Presently the CFR states that the manufacturer must supply test data on four different split-system combinations. 10 CFR 430.24(m)(6)(iii) Each split-system combination must be other than the combination with the highest sales volume. Overall, test data on four different indoor units and two different models of outdoor units are required. Two of the indoor units are to be tested with one model of outdoor unit; the remaining two indoor units are to be tested with the second model of outdoor unit.

Two additional requirements are also currently specified in § 430.24(m)(6)(iii). First, the tested capacities of the two models of outdoor units, when paired with their respective highest-sales-volume indoor unit, shall differ by at least a factor of two. Second, the two indoor units tested with the same model of outdoor unit are required to be from two different coil families. Finally, in addition to data on the four (mixed system) combinations, performance ratings on the outdoor units alone, or on the outdoor units when coupled to their highest-sales-volume indoor unit, are also required.

Some manufacturers find it difficult to, or simply cannot, meet the above requirements. For example, an independent coil manufacturer who sells indoor units from only one coil family for a given capacity range, will not be able to meet the two-different-coil-families requirement. The requirement of using only two models of outdoor units may also cause difficulty. Often the manufacturers will submit ARI certification test data for verification purposes in order to avoid having to pay for additional testing. A manufacturer is more likely to have test data on its indoor units tested with four different outdoor units than to have data where the same model of outdoor unit was used with two different indoor coils.

At the December 2002 workshop, Excel Comfort Systems suggested that waivers be considered for those cases where a company cannot meet the present requirements for verification data (Public Hearing Tr., pages 48–50). Unico spoke in favor of using any valid, available data to verify an alternative rating method (Public Hearing Tr., page 51). Other manufacturers present (Trane, Lennox, and Carrier) emphasized assuring that the data used for verification is representative of the manufacturer's existing product line (Public Hearing Tr., pages 52–53).

NIST, with industry input, reviewed section § 430.24(m)(6) and (8) and recommended additions to the existing requirements. Based on NIST recommendations, DOE has decided that the present requirements are acceptable but additional options should be incorporated to allow flexibility without affecting the quality of the validation process. For example, as proposed, data from two, three, or four outdoor units may be used to meet the requirements for data on four systems. Presently, only two outdoor units are used to create the four required systems.

A related issue raised at the December 2002 workshop was whether any new limits should be allowed concerning the use of ''old'' verification data (Public Hearing Tr., pages 35–36, 51–53). The adjective ''old'' here can mean verification data for a split system where the indoor, outdoor, or both units are no longer manufactured, or where the data was collected many years ago. In the former case, one question that may influence a decision on allowing the use of data based on an obsolete indoor unit is whether the remaining product line includes coils from the same coil family. As a step toward offering clarification on acceptable verification data, DOE proposes to specifically address the case in which submitted data includes an obsolete indoor coil. In such cases, the data will be accepted if the indoor coil is from the same coil family as other indoor coils that are still in production.

The above proposed changes, along with those revisions discussed in the next few sections, contribute to a rather comprehensive revision of § 430.24(m), ''Units to be tested.'' The entire content of the proposed 430.24(m) is provided in the regulatory language section following this notice.

2. *Guidance on the inclusion of pre-production units in the sample population used to determine and validate the published ratings.* DOE

seeks to have all manufacturers subject to the same requirements and to have them apply consistent practices in meeting the DOE regulatory requirements. In the area of selecting a sample population, the first paragraph of § 430.24, ''Units to be tested,'' states that ''a sample shall be selected and tested comprised of units which are production units, or are representative of production units of the basic model being tested, and shall meet the following applicable criteria.'' Similar language is repeated in a subsection specific to central air conditioners and heat pumps, § 430.24(m)(2)(i): ''A sample of sufficient size, composed of production units or representing production units, shall be tested * * *'' Today's proposed rule seeks to build on this requirement by explicitly stating that pre-production units may be used as part of the sample population, but only if fabricated using the same tooling as used for production units (see section 430.24(m)(1) in the regulatory language section following this notice). DOE seeks comment on this proposal and any other alternative requirements that should be used to disqualify a pre-production unit from being used to obtain certified ratings for its full-production counterpart.

3. *Clarification of the sample population used to validate the rated SEER and the rated HSPF.* Today's proposed rule includes a requirement within § 430.24(m)(1)(iii) that a manufacturer must use the same heat pump results for both SEER and HSPF when obtaining certified ratings. For example, a manufacturer cannot test five heat pumps in cooling and heating and then use the results from units 1, 3, and 5 as the basis for the certified SEER while using the results from units 2, 4, and 5 as the basis for the certified HSPF. With one exception, each heat pump unit of the sample population must be tested in both the cooling and heating mode and their respective results used in determining the certified SEER and HSPF for the particular heat pump model. The one exception is the case where the manufacturer obtains a sample SEER or HSPF that is equal to or greater than the value at which the manufacturer will certify, while the other seasonal rating descriptor (HSPF or SEER, respectively) is below a threshold value being targeted by the manufacturer. In this case only, one or more additional units may be tested in the operating mode, cooling or heating, that corresponds to this marginal rating and the results used as part of the sample population for that descriptor. DOE invites comments on the proposal.

4. *Clarification of the definition of a ''highest sales volume combination.''* ARI recently implemented an internal policy whereby all highest-sales-volume tested combinations for unitary air conditioners having a rated SEER less than 14 must be coil-only units. ARI waives this requirement for through-the-wall and ductless equipment. The ARI policy also requires that all unitary air conditioners having a rated SEER of 14 or higher must have a coil-only rating for each model of outdoor unit.

The ARI policy improves the likelihood that the outdoor unit, in combination with any compatible indoor unit, will meet the federal energy efficiency standards. The default values for the fan heat and fan power prescribed in the DOE test procedure when rating coil-only systems typically yield a conservative estimate of indoor performance. As in the past, SEER and HSPF ratings for coil-only listings are expected to remain clustered below the listings for blower coils, for the same outdoor unit. The coil-only policy helps avoid the situation in which an outdoor unit combined with a blower coil has a tested SEER of 13.0 or 13.5, while the same outdoor unit, combined with a coil-only indoor unit, would have a tested SEER of only 12.0 or 12.5. Thus, the policy improves the chances that all combinations with a given outdoor unit meet DOE's energy conservation standards.

The ARI policy is consistent with the DOE requirement to test each outdoor unit with its highest-sales-volume indoor unit. Historically, split-system condensing units are much more often installed with coil-only indoor units than with blower-coil units. And, for those comparatively fewer blower-coil installations, most do not use the highest efficiency motors, which are usually variable-speed motors. Thus, now and for the immediate future, the probability that a split-system condensing unit will be most often installed with a blower coil is low, and the chances of the highest-sales-volume application including a blower coil having the highest-efficiency motor is remote.

The ARI policy is consistent with current and past assignments of highest-sales-volume combinations for split-system air conditioners. A review of past ARI Unitary Directories shows that the vast majority of listings designate a coil-only system as the highest-sales-volume combination (HSVC). For those comparatively few cases where a blower-coil combination was so designated, the ratings frequently corresponded to substantially higher SEER equipment, such as modulating systems.

The ARI policy avoids the scenario in which a manufacturer chooses to designate its highest-rated split-system combination as the highest-sales-volume combination. The process of proving or disproving whether sales volume supports such a designation would be difficult. If allowed, such a designation might lead to many sub-13-SEER combinations being sold—if not by a system manufacturer, then with the systems sold with third-party indoor units. Although such rated coil-only combinations would still have to meet the 13-SEER standard and, for ARI members, be subject to certification verification tests, these two safeguards are not as rigorous as the sample-population testing required for highest-sales-volume combinations. Thus, the ARI policy protects against increased availability of truly sub-13-SEER combinations.

In making exceptions for through-the-wall and ductless systems, and by including the 14-SEER delimiter, the ARI policy recognizes that there are cases where blower-coil combinations are the predominant, if not exclusive, option. However, the outdoor units for the two exception cases are highly unlikely, if not impossible, to combine with a typical coil-only indoor unit. A HSVC having a SEER rating of 14 or greater is unlikely to yield a sub-13 SEER system when combined with a compatible coil-only indoor unit. The policy leaves little chance for sub-13 SEER combinations to become readily available to the installer in the field.

DOE agrees with the ARI policy and believes that its main elements should apply to all manufacturers, not just ARI member companies. Therefore, DOE seeks to adopt those aspects of the ARI policy that better define the requirements of a highest-sales-volume combination. In doing so, DOE proposes one change and two additions. The one change is to have the policy apply to all split-system air conditioners that use a single-speed compressor rather than to units having a rated SEER less than 14. DOE believes this change offers a slightly cleaner delimiter. One addition is to add small-duct, high-velocity systems to the list of exceptions. The second addition is an exception for split-system air conditioners having design features (*e.g.*, controls, proprietary interface cabling and handshaking) that prevent its installation with all coil-only indoor units. This second addition is offered as a compromise to manufacturers who intend to sell only blower-coils with particular outdoor units. In this case,

the manufacturer must accept the burden of preventing cases where these same outdoor units are installed with third-party, coil-only indoor units. The system manufacturer must do more than include written disclaimers that the outdoor units may not be so applied; the manufacturer must incorporate some feature that only allows blower-coil combinations and prevents all coil-only misapplications.

The text for this proposed clarification of what constitutes a highest-sales-volume combination is provided in § 430.24(m)(2).

5. *Upper limit on the difference between calculated and tested SEER and HSPF values.* Ratings for untested split-system combinations can exceed the ratings of the highest-sales-volume tested combination on which the former ratings are based. Ideally, these ratings increases occur because of differences between the type of expansion device, the type of blower (including with or without fan delay), and the type of coil used in the two different indoor units. The rating offsets, however, are also due to the inherent limitations of the alternative rating method, the quality of input data used for the ARM calculations, and, possibly, how the ARM itself is applied.

At a DOE public workshop held on March 29, 2001, Carrier Corporation reported cases where two systems using the same outdoor unit and very similar indoor units had published ratings that differed by as much as 10 percent, or one full SEER point. (Public Hearing Tr., page 208) The higher rated combination was either subject to spot checks as part of the ARI certification program, or had its representations reviewed by a professional engineer for accuracy. However, the effectiveness of these checks was questioned because, in the case of the former, a five-percent tolerance must be allowed and, in the case of the latter, no guidance was provided as to how to evaluate or quantify the accuracy.

To their credit, ARI members sought to address the problem internally by pursuing two changes. The first change was for system manufacturers to provide the Independent Coil Manufacturers (ICM) with better data (i.e., condenser curves) on which to base the ICM mixed system ratings—better data in, better predictions out. The second change was to conduct more spot checks on combinations rated by ICMs and, when a failure did occur, to require re-ratings for all combinations using the failed indoor unit. Previously, only the one combination that failed certification testing was re-rated. The impact of these changes is yet to be fully assessed but is expected to mitigate the problem of inconsistent ratings among competing manufacturers.

As a further step, DOE today proposes to place an upper limit on the allowed offsets between predicted versus measurement-based ratings. Whereas presently ratings from DOE-approved alternative rating methods receive blanket acceptance, the proposed change would introduce an upper limit offset of 5 percent. Five percent is proposed because of an argument put forth by Carrier Corporation that 5 percent is the upper limit of the practical efficiency increase that could be achieved (Carrier, No. 1). DOE believes that this 5-percent limit will reduce the occurrence of inflated ratings and therefore proposes a 5-percent-upper-limit offset. However, this proposed limit would only apply to cases where the difference in performance should be smallest: Where the HSVC system is a coil-only unit and the untested system is a coil-only unit. Manufacturers having non-highest-sales-volume combinations whose ratings are expected to exceed the 5-percent offset limit have the option of obtaining the ratings by testing. This existing test option, which is found in 10 CFR 430.24(m)(2)(i), is not subject to the proposed 5-percent limit. The proposed approach would apply to any untested combination, whether offered by the system manufacturer or an ICM.

DOE proposes placing limits on the offsets predicted by an alternative rating method in § 430.24(m)(4)(iii) and seeks comments on whether limits should be imposed in other cases, not just when both combinations are coil-only. Finally, data that either confirms or refutes the proposed limit of 5 percent is requested.

6. *Clarification of the published ratings for untested split-system combinations.* The test procedure states that the ARM shall be used to obtain ''representative values of the measures of energy consumption.'' (See § 430.24 (m)(2)(ii).) DOE seeks to improve upon the existing definition by adding new quantitative requirements. Thus, DOE today proposes amendments to § 430.24(m)(4) that require published ratings for an untested split-system combination to be equal to, or lower than, the value calculated using the DOE-approved ARM. For those manufacturers who use the laboratory data from the HSVC testing to adjust their ARM or a simulation subcomponent, the resulting ''adjustment factor'' shall be applied to the ARM calculations for untested combinations that use the same outdoor unit. This adjustment factor, if used, shall be limited to causing a maximum change of five-percent higher ratings than those obtained by applying the ARM without adjustment.

For cases where the HSVC and the untested combination are both coil-only units, the limit described in item 5 above, ''Upper limit on the difference between calculated and tested SEER and HSPF values,'' also applies, and therefore may cause the published rating to be less than the value calculated using the manufacturer's ARM, as adjusted by the ''adjustment factor'' described above. This proposal, like the previous one above, should tend to curb artificially inflated efficiency ratings for untested split-system combinations.

7. *Adding requirement that ratings for an air conditioner or heat pump that is rated with a furnace include the model number of that furnace as part of the overall equipment model number.* System manufacturers sometimes seek SEER and HSPF ratings for complete systems consisting of a coil-only air conditioner or heat pump and a particular model of furnace. To more clearly delineate published ratings obtained for such systems, DOE proposes to require that the model number of the furnace be included as part of the published model number, most likely as an add-on to the indoor unit model number. This proposed clarification is reflected in the proposed revisions to § 430.62(a)(4)(i) and (ii).

8. *For products such as multi-splits which have multiple indoor units, instituting a ''tested combination'' as an alternative to testing the combination with ''the largest volume of retail sales.''* Currently, manufacturers are required to select for testing the combination manufactured by the condensing unit manufacturer likely to have the largest volume of retail sales. For combinations having multiple indoor units, the combination with the largest volume of retail sales may be difficult to identify and too complex to test. DOE is therefore proposing an equivalent ''tested combination,'' which should remove one impediment to the testing of multi-split units.

C. Proposed Non-Substantive Changes to Related Portions of the CFR

1. *Clarification of a private labeler's (i.e., a third party) responsibility for ensuring that reported ratings are based on an approved alternative method for rating untested combinations or on laboratory test data.* The responsibilities of private labelers are set forth in Subpart F, Certification and Enforcement, but are delineated in § 430.24. DOE proposes language

clarifying that private labelers, as well as manufacturers, must seek DOE approval to use an ARM. If the system manufacturer or the ICM has a DOE-approved ARM for the products in question, the same ARM may be used by the private labeler.

2. *Revisions to the definition of ''coil family.''* DOE proposes minor modifications to the existing definition, adding a few specifics, including examples of fin shapes: ''flat, wavy, louvered, lanced,'' and re-formatting for improved readability.

3. *New definition for ''private labeler'' within § 430.2.* DOE proposes to incorporate the definition from the statute, 42 U.S.C. 6291(15). Hitherto, private labelers were not explicitly referenced in 10 CFR 430.24, but the proposed revision does explicitly reference them (see item 1, above). In order to facilitate the clarification of private labeler responsibility, DOE proposes to incorporate the statutory definition into the definitions section, § 430.2.

4. *Definitions of terms: ''Indoor unit,'' ''outdoor unit,'' ''ARM/simulation adjustment factor,'' and ''tested combination.''* The terms ''indoor unit'' and ''outdoor unit'' are used in the current test procedure, and in the proposed revisions, but are not defined. DOE proposes definitions based on the current definition of ''condensing unit'' in § 430.2. DOE proposes definitions of the new terms ''ARM/simulation adjustment factor'' and ''tested combination'' which are included in proposed amendments to 10 CFR 430.24(m). The ARM/simulation adjustment factor was developed by NIST and DOE as part of an effort to improve the accuracy of mixed system ratings. The definition of ''tested combination'' is a minor revision to the term as proposed in DOE's publication of a multi-split petition for waiver. (71 FR 14858, March 24, 2006)

D. Effect of Test Procedure Revisions on Compliance With Standards

DOE believes the revisions proposed today will not affect the ratings of air conditioners and heat pumps with SEER and HSPF ratings that minimally comply with the current DOE energy conservation standards. Some of the proposed revisions are projected to slightly change the ratings of some higher efficiency, two-capacity systems. The proposed changes that only affect higher-efficiency systems (relative to the 2006 EPCA minimums), if adopted, would not invoke the requirement for DOE to amend its energy conservation minimum standards. More specific discussions concerning the impact of the proposed changes are offered below.

The proposed changes unique to the testing of small-duct, high velocity systems are needed to more accurately measure their performance. DOE's decision in SpacePak/Unico, 29 DOE ¶ 81,002 (2004), on exception relief efficiency standards for SDHV systems manufacturers—11.0 SEER and 6.8 HSPF—came after the higher minimum external-static-pressure requirements of section II.A.1 and the new definition of an SDHV system were evaluated. Therefore, any impact from testing at the higher static pressures has already been considered.

Reinstating the option of conducting a cyclic test at high-capacity, when testing a two-capacity unit, is projected to very minimally increase the measured SEER or HSPF rating. This option will be used only when the unit locks out low-capacity operation, typically at the more extreme outdoor temperatures. At these more extreme temperatures, the unit would be modeled as having a relatively high load-factor. The more extreme temperatures also correspond to temperature bins having comparatively few fractional hours. The combination acts to minimize the impact of the cyclic-degradation coefficient. Thus, the burden of running this optional test would only be considered when a manufacturer is very close to achieving a target rating and needs less than 0.2 SEER/HSPF increase in the measured SEER/HSPF to achieve this target. So, a possible scenario is a two-capacity unit that reverts to second-stage cooling only at temperatures above 90 °F and the optional, high-capacity cyclic test yields a C_D that bumps the measured SEER from 16.85 to 17.0.

Two proposed changes specific to two-capacity heat pumps are shortening the duration of the low-capacity Frost Accumulation Test from 12 hours to 6 hours, and allowing the use of default equations in lieu of testing. As noted above in section II.A.3, the former is only expected to affect the average space heating capacity and power use at low-stage and 35 °F to the point of causing a minimal, systematic increase in the derived HSPF for the rare case where the heat pump remains completely frosted beyond 6 hours during this low-capacity test. Such a heat pump would be expected to perform very poorly during the required, high-capacity Frost Accumulation Test, and thus yield a HSPF rating that was at the low end for two-capacity heat pumps. Such performance would likely be unacceptable to most manufacturers.

Using default equations in lieu of conducting the low-capacity Frost Accumulation Test would negatively impact the measured HSPF. DOE estimates that the HSPF could be as much as 0.3 points lower if the default equations are used to obtain the value corresponding to Region IV and the minimum design-heating requirement.

The changes proposed for testing and rating modulating multi-split systems, as outlined above in section II.A.5 certainly will impact their SEER and HSPF ratings. These changes, however, are necessary to allow a reasonable approximation of these performance descriptors. The current test procedure is simply deficient in covering these relatively new products, as is best evidenced by the numerous requests for test procedure waivers that have been submitted by manufacturers of these products. However, it is too early to know the impact, if any, of these changes on such equipment that only minimally complies with the current energy conservation standards.

The proposed changes to adopt the long-standing industry practice of adjusting measured capacities to account for the losses in the outlet ductwork is not expected to cause an increase in SEER or HSPF. This expectation results because the test procedure is simply catching up with current practice.

The proposed change to define ''repeatable'' when conducting cyclic tests is viewed as improving repeatability and thus having a random effect on the derived cyclic-degradation coefficient and, ultimately, the calculated SEER and HSPF. Similarly, making the definition of ''standard air'' consistent with the definition in the 2005 version of ASHRAE Standard 37 will have no effect on the SEER and HSPF as calculated using the October 2005 final rule.

Finally, changing the low-capacity cooling-mode test condition from 95 °F to 67 °F for two-capacity units is projected to change the calculated SEER very minimally—within ± 0.1 SEER points—in most cases. However, the reduction in SEER could be very considerable if the power consumption during the 95 °F test at low capacity is increased in an effort to obtain lower estimates, through extrapolation, of the power consumption for low-capacity at temperatures less than 82 °F. In general, the impact of the change will be measurable if the unit's electrical power draw increases atypically at higher outdoor temperatures when operating at low-capacity. Manufacturers will now seek to avoid this because it reduces the SEER rating.

III. Procedural Requirements

A. Review Under Executive Order 12866

It has been determined that today's regulatory action is not a ''significant regulatory action'' under Executive Order 12866, ''Regulatory Planning and Review.'' 58 FR 51735 (October 4, 1993). Accordingly, this action was not subject to review by the Office of Management and Budget under the Executive Order.

B. Review Under the Regulatory Flexibility Act

The Regulatory Flexibility Act (5 U.S.C. 601 et seq.) requires preparation of an initial regulatory flexibility analysis for any rule that by law must be proposed for public comment, unless the agency certifies that the rule, if promulgated, will not have a significant economic impact on a substantial number of small entities. As required by Executive Order 13272, ''Proper Consideration of Small Entities in Agency Rulemaking,'' 67 FR 53461 (August 16, 2002), DOE published procedures and policies on February 19, 2003, to ensure that the potential impacts of its rules on small entities are properly considered during the rulemaking process. 68 FR 7990. The Department has made its procedures and policies available on the Office of General Counsel's web site: *http://www.gc.doe.gov.*

The Department reviewed today's proposed rule under the provisions of the Regulatory Flexibility Act and the procedures and policies published on February 19, 2003. This proposed rule prescribes test procedures that will be used to test compliance with energy conservation standards. The proposed rule affects central air conditioner and heat pump test procedures and would not have a significant economic impact, but rather would provide common testing methods. Therefore DOE certifies that the proposed rule would not have a ''significant economic impact on a substantial number of small entities,'' and the preparation of a regulatory flexibility analysis is not warranted. The Department will transmit the certification and supporting statement of factual basis to the Chief Counsel for Advocacy of the Small Business Administration for review under 5 U.S.C. 605(b).

C. Review Under the Paperwork Reduction Act

This rulemaking will impose no new information or record keeping requirements. Accordingly, Office of Management and Budget clearance is not required under the Paperwork Reduction Act. (44 U.S.C. 3501 et seq.)

D. Review Under the National Environmental Policy Act

In this proposed rule, the Department proposes amendments to test procedures that may be used to implement future energy conservation standards for central air conditioners. The Department has determined that this rule falls into a class of actions that are categorically excluded from review under the National Environmental Policy Act of 1969 (NEPA), 42 U.S.C. 4321 et seq. The rule is covered by Categorical Exclusion A5, for rulemakings that interpret or amend an existing rule without changing the environmental effect, as set forth in the Department's NEPA regulations in Appendix A to Subpart D, 10 CFR part 1021. This rule will not affect the quality or distribution of energy usage and, therefore, will not result in any environmental impacts. Accordingly, neither an environmental impact statement nor an environmental assessment is required.

E. Review Under Executive Order 13132

Executive Order 13132, ''Federalism,'' 64 FR 43255 (August 4, 1999) imposes certain requirements on agencies formulating and implementing policies or regulations that preempt State law or that have federalism implications. The Executive Order requires agencies to examine the constitutional and statutory authority supporting any action that would limit the policymaking discretion of the States and to carefully assess the necessity for such actions. The Executive Order also requires agencies to have an accountable process to ensure meaningful and timely input by State and local officials in the development of regulatory policies that have federalism implications. On March 14, 2000, DOE published a statement of policy describing the intergovernmental consultation process it will follow in the development of such regulations. 65 FR 13735. The Department has examined today's proposed rule and has determined that it does not preempt State law and does not have a substantial direct effect on the States, on the relationship between the national government and the States, or on the distribution of power and responsibilities among the various levels of government. EPCA governs and prescribes Federal preemption of State regulations as to energy conservation for the products that are the subject of today's proposed rule. States can petition the Department for a waiver of such preemption to the extent, and based on criteria, set forth in EPCA. (42 U.S.C. 6297) No further action is required by Executive Order 13132.

F. Review Under Executive Order 12988

With respect to the review of existing regulations and the promulgation of new regulations, section 3(a) of Executive Order 12988, ''Civil Justice Reform'' (61 FR 4729, February 7, 1996) imposes on Federal agencies the general duty to adhere to the following requirements: (1) Eliminate drafting errors and ambiguity; (2) write regulations to minimize litigation; and (3) provide a clear legal standard for affected conduct rather than a general standard and promote simplification and burden reduction. Section 3(b) of Executive Order 12988 specifically requires that Executive agencies make every reasonable effort to ensure that the regulation: (1) Clearly specifies the preemptive effect, if any; (2) clearly specifies any effect on existing Federal law or regulation; (3) provides a clear legal standard for affected conduct while promoting simplification and burden reduction; (4) specifies the retroactive effect, if any; (5) adequately defines key terms; and (6) addresses other important issues affecting clarity and general draftsmanship under any guidelines issued by the Attorney General. Section 3(c) of Executive Order 12988 requires Executive agencies to review regulations in light of applicable standards in section 3(a) and section 3(b) to determine whether they are met or it is unreasonable to meet one or more of them. The Department has completed the required review and determined that, to the extent permitted by law, this proposed rule meets the relevant standards of Executive Order 12988.

G. Review Under the Unfunded Mandates Reform Act of 1995

Title II of the Unfunded Mandates Reform Act of 1995 (Pub. L. 104–4) (UMRA) requires each Federal agency to assess the effects of Federal regulatory actions on State, local, and Tribal governments and the private sector. For a proposed regulatory action likely to result in a rule that may cause the expenditure by State, local, and Tribal governments, in the aggregate, or by the private sector of $100 million or more in any one year (adjusted annually for inflation), section 202 of UMRA requires a Federal agency to publish a written statement that estimates the resulting costs, benefits, and other effects on the national economy. (2 U.S.C. 1532(a), (b)) The UMRA also requires a Federal agency to develop an effective process to permit timely input by elected officers of State, local, and Tribal

governments on a proposed ''significant intergovernmental mandate,'' and requires an agency plan for giving notice and opportunity for timely input to potentially affected small governments before establishing any requirements that might significantly or uniquely affect small governments. On March 18, 1997, DOE published a statement of policy on its process for intergovernmental consultation under UMRA (62 FR 12820) (also available at *http://www.gc.doe.gov*). The proposed rule published today contains neither an intergovernmental mandate nor a mandate that may result in expenditure of $100 million or more in any year, so these requirements do not apply.

H. Review Under the Treasury and General Government Appropriations Act of 1999

Section 654 of the Treasury and General Government Appropriations Act, 1999 (Pub. L. 105–277) requires Federal agencies to issue a Family Policymaking Assessment for any rule that may affect family well-being. This rule would not have any impact on the autonomy or integrity of the family as an institution. Accordingly, DOE has concluded that it is not necessary to prepare a Family Policymaking Assessment.

I. Review Under Executive Order 12630

The Department has determined, under Executive Order 12630, ''Governmental Actions and Interference with Constitutionally Protected Property Rights,'' 53 FR 8859 (March 18, 1988), that this proposed regulation, if promulgated as a final rule, would not result in any takings which might require compensation under the Fifth Amendment to the United States Constitution.

J. Review Under the Treasury and General Government Appropriations Act of 2001

Section 515 of the Treasury and General Government Appropriations Act, 2001 (44 U.S.C. 3516 note) provides for agencies to review most disseminations of information to the public under guidelines established by each agency pursuant to general guidelines issued by OMB. The OMB's guidelines were published at 67 FR 8452 (February 22, 2002), and DOE's guidelines were published at 67 FR 62446 (October 7, 2002). The Department has reviewed today's notice under the OMB and DOE guidelines and has concluded that it is consistent with applicable policies in those guidelines.

K. Review Under Executive Order 13211

Executive Order 13211, ''Actions Concerning Regulations That Significantly Affect Energy Supply, Distribution, or Use,'' 66 FR 28355 (May 22, 2001) requires Federal agencies to prepare and submit to the Office of Information and Regulatory Affairs (OIRA), Office of Management and Budget, a Statement of Energy Effects for any proposed significant energy action. A ''significant energy action'' is defined as any action by an agency that promulgated or is expected to lead to promulgation of a final rule, and that: (1) Is a significant regulatory action under Executive Order 12866, or any successor order; and (2) is likely to have a significant adverse effect on the supply, distribution, or use of energy, or (3) is designated by the Administrator of OIRA as a significant energy action. For any proposed significant energy action, the agency must give a detailed statement of any adverse effects on energy supply, distribution, or use should the proposal be implemented, and of reasonable alternatives to the action and their expected benefits on energy supply, distribution, and use. Today's regulatory action would not have a significant adverse effect on the supply, distribution, or use of energy and, therefore, is not a significant energy action. Accordingly, DOE has not prepared a Statement of Energy Effects.

L. Review Under Section 32 of the Federal Energy Administration (FEA) Act of 1974

Under section 301 of the Department of Energy Organization Act (Pub. L. 95–91), DOE must comply with section 32 of the Federal Energy Administration Act of 1974, as amended by the Federal Energy Administration Authorization Act of 1977. 15 U.S.C. 788. Section 32 provides that where a proposed rule contains or involves use of commercial standards, the rulemaking must inform the public of the use and background of such standards.

The proposed rule incorporates testing methods contained in the following commercial standards: (1) ASHRAE Standard 23–2005, ''Methods of Testing for Rating Positive Displacement Refrigerant Compressors and Condensing Units;'' (2) ASHRAE Standard 37–2005, ''Methods of Testing for Rating Unitary Air-Conditioning and Heat Pump Equipment;'' (3) ASHRAE Standard 116–2005, and ''Methods of Testing for Rating for Seasonal Efficiency of Unitary Air Conditioners and Heat Pumps. The Department has evaluated these standards and is unable to conclude whether they fully comply with the requirements of section 323(b) of the Federal Energy Administration Act, i.e., whether they were developed in a manner that fully provides for public participation, comment, and review.

As required by section 32(c) of the Federal Energy Administration Act of 1974, as amended, DOE will consult with the Attorney General and the Chairman of the Federal Trade Commission before prescribing a final rule about the impact on competition of using the methods contained in these standards.

IV. Public Participation

A. Attendance at Public Meeting

The time and date of the public meeting are listed in the **DATES** section at the beginning of this notice of proposed rulemaking. The public meeting will be held at the U.S. Department of Energy, Forrestal Building, Room 1E–245, 1000 Independence Avenue, SW., Washington, DC 20585–0121. To attend the public meeting, please notify Ms. Brenda Edwards-Jones at (202) 586–2945. Foreign nationals visiting DOE Headquarters are subject to advance security screening procedures, requiring a 30-day advance notice. Any foreign national wishing to participate in the meeting should advise DOE of this fact as soon as possible by contacting Ms. Brenda Edwards-Jones to initiate the necessary procedures.

B. Procedure for Submitting Requests to Speak

Any person who has an interest in today's notice, or who is a representative of a group or class of persons that has an interest in these issues, may request an opportunity to make an oral presentation. Such persons may hand-deliver requests to speak, along with a computer diskette or CD in WordPerfect, Microsoft Word, PDF, or text (ASCII) file format to the address shown in the **ADDRESSES** section at the beginning of this notice of proposed rulemaking between the hours of 9 a.m. and 4 p.m., Monday through Friday, except Federal holidays. Requests may also be sent by mail or e-mail to: *Brenda.Edwards-Jones@ee.doe.gov.*

Persons requesting to speak should briefly describe the nature of their interest in this rulemaking and provide a telephone number for contact. The Department requests persons selected to be heard to submit an advance copy of their statements at least two weeks before the public meeting. At its discretion, DOE may permit any person who cannot supply an advance copy of

their statement to participate, if that person has made advance alternative arrangements with the Building Technologies Program. The request to give an oral presentation should ask for such alternative arrangements.

C. Conduct of Public Meeting

The Department will designate a DOE official to preside at the public meeting and may also use a professional facilitator to aid discussion. The meeting will not be a judicial or evidentiary-type public hearing, but DOE will conduct it in accordance with 5 U.S.C. 553 and section 336 of EPCA, 42 U.S.C. 6306. A court reporter will be present to record the proceedings and prepare a transcript. The Department reserves the right to schedule the order of presentations and to establish the procedures governing the conduct of the public meeting. After the public meeting, interested parties may submit further comments on the proceedings as well as on any aspect of the rulemaking until the end of the comment period.

The public meeting will be conducted in an informal, conference style. The Department will present summaries of comments received before the public meeting, allow time for presentations by participants, and encourage all interested parties to share their views on issues affecting this rulemaking. Each participant will be allowed to make a prepared general statement (within time limits determined by DOE), before the discussion of specific topics. The Department will permit other participants to comment briefly on any general statements.

At the end of all prepared statements on a topic, DOE will permit participants to clarify their statements briefly and comment on statements made by others. Participants should be prepared to answer questions by DOE and by other participants concerning these issues. Department representatives may also ask questions of participants concerning other matters relevant to this rulemaking. The official conducting the public meeting will accept additional comments or questions from those attending, as time permits. The presiding official will announce any further procedural rules or modification of the above procedures that may be needed for the proper conduct of the public meeting.

The Department will make the entire record of this proposed rulemaking, including the transcript from the public meeting, available for inspection at the U.S. Department of Energy, Forrestal Building, Room 1J–018 (Resource Room of the Building Technologies Program), 1000 Independence Avenue, SW., Washington, DC, (202) 586–9127, between 9 a.m. and 4 p.m., Monday through Friday, except Federal holidays. Any person may buy a copy of the transcript from the transcribing reporter.

D. Submission of Comments

The Department will accept comments, data, and information regarding the proposed rule before or after the public meeting, but no later than the date provided at the beginning of this notice of proposed rulemaking. Please submit comments, data, and information electronically. Send them to the following e-mail address: *cactestprocedure2006@ee.doe.gov.* Submit electronic comments in WordPerfect, Microsoft Word, PDF, or text (ASCII) file format and avoid the use of special characters or any form of encryption. Comments in electronic format should be identified by the docket number EE–RM/TP–02–002 and/or RIN number 1904–AB55, and wherever possible carry the electronic signature of the author. Absent an electronic signature, comments submitted electronically must be followed and authenticated by submitting the signed original paper document. No telefacsimiles (faxes) will be accepted.

According to 10 CFR 1004.11, any person submitting information that he or she believes to be confidential and exempt by law from public disclosure should submit two copies: one copy of the document including all the information believed to be confidential, and one copy of the document with the information believed to be confidential deleted. The Department of Energy will make its own determination about the confidential status of the information and treat it according to its determination.

Factors of interest to the Department when evaluating requests to treat submitted information as confidential include: (1) A description of the items; (2) whether and why such items are customarily treated as confidential within the industry; (3) whether the information is generally known by or available from other sources; (4) whether the information has previously been made available to others without obligation concerning its confidentiality; (5) an explanation of the competitive injury to the submitting person which would result from public disclosure; (6) when such information might lose its confidential character due to the passage of time; and (7) why disclosure of the information would be contrary to the public interest.

E. Issues on Which DOE Seeks Comment

The Department is particularly interested in receiving comments and views of interested parties concerning:

1. Whether any of the proposed changes would affect the measure of energy efficiency, and if so, to what degree, of any central air conditioner or heat pump.
2. Whether the proposed changes would prevent any model from complying with the DOE energy conservation standards.
3. The default equations for calculating low-capacity performance of two-capacity heat pumps at the 35 °F test condition (see proposed revisions to section 3.6.3). DOE requests data from testing at low capacity for the 47, 35, and 17 °F test conditions.
4. The proposed changes specific to multi-split systems. For example, how should the test procedure account for their full range of modulation even though tests may not be possible at the true minimum capacity?
5. Whether a separate test procedure for multi-splits should be developed.
6. Whether the proposed quantitative measures to improve the repeatability of cyclic tests (i.e., tolerance on both the cycle-to-cycle integrated temperature difference and average power consumption) are justified.
7. The impact of conducting as many as three low-capacity tests at the 67 °F test condition.
8. Whether there is a better descriptor than ''Full-load'' for replacing ''Certified'' when identifying the air-volume rate used for most lab tests. Should the selected descriptor also be incorporated into the definition for a small-duct, high-velocity system (see 1.35): ''at least 1.2 inches (of water) when operated at the certified air volume rate of 220–350 cfm per rated ton of cooling * * *''?
9. The proposed approach for establishing the Full-load, Air-Volume Rate for blower coil units, with its 0 to −5 percent tolerance during the setup process. Data showing the typical variation in blower performance is requested.
10. The changes proposed within 10 CFR 430.24, ''Units to be tested,'' that pertain to the alternative rating method (ARM). Comments and data are sought that address the proposed options for ARM verification data, the information on the contents of a submittal package, and the explicit limits on the ARM-derived ratings (e.g., a maximum 5 percent limit for cases where both the untested and HSVC units are coil-only systems).
11. When a pre-production unit should be accepted or excluded from

the tested sample population used to obtain the certified ratings.

12. The proposal for improving the definition of a highest-sales-volume combination, which only applies to single-speed air conditioners.

13. The proposed definition of a ''tested combination,'' for combinations having multiple indoor units?

DOE also welcomes comments on any problems that have arisen with the October 2005 final rule. In that regard, DOE has received inquiries regarding two changes contained in the 2005 test procedure.

The October 2005 final rule contains amendments to the definition of a demand-defrost control system (definition 1.21) while also singling out one such system, a time-adaptive-defrost control system (definition 1.42). In order to avoid the excessive number of frost/defrost cycles needed to obtain repeatable performance during a Frost accumulation Test, the October 2005 final rule allows the controls of the time-adaptive system to be overridden. The frosting interval during the official test period, in this case only, now ends by manually initiating a defrost cycle at an elapsed time specified by the manufacturer (see section 3.9 of Appendix M, Nt., to Subpart B of 10 CFR part 430). To varying degrees, most heat pumps having a demand defrost-control system require multiple frost/defrost cycles in the laboratory before repeatable performance results. The need for running several complete cycles alone, or in combination with relatively long frosting intervals, can lead to long test times. The question arises whether there are cases involving other control systems where changes may be required in the future to reduce the testing burden. DOE seeks comments on this question.

The October 2005 final rule included a requirement in section 3.1.4.2 that ''for ducted two-capacity units that are tested without an indoor fan installed, the Cooling Minimum Air Volume Rate is the higher of (1) the rate specified by the manufacturer or, (2) 75 percent of the Cooling Full-Load Air Volume Rate.'' For heating, in addition, section 3.1.4.5 directs the tester to ''use the Cooling Minimum Air Volume Rate as the Heating Minimum Air Volume Rate.'' An alternative approach considered during the prior rulemaking was to exclude option (2) above—75 percent of the Cooling Full-Load Air Volume Rate—and simply have the manufacturer specify the Cooling Minimum Air Volume Rate. Although these two alternatives were extensively debated before publishing the October 2005 final rule, the issue has been revived. The sales of two-capacity units is likely to increase following the higher 2006 DOE efficiency standards and, as a result, there is increasing attention to test procedure requirements for these products. The reasoning behind the October 2005 final rule approach is that most furnaces in the current housing stock (to which a two-capacity coil-only unit would be applied) contain multi-speed blowers. For these multi-speed furnace blowers, a typical air volume rate at the lowest speed setting is 75 percent of the maximum air volume rate. For many other two-capacity units, however, the default minimum air volume rate is higher than the air volume rate at the lowest speed setting. Although satisfied with its earlier decision on this topic, DOE seeks improvements to the test procedure to ensure that two-capacity coil-only units are appropriately tested. For example, does the test procedure need to cover the effect of a blower kit accessory that ensures a proper coil-only field installation? DOE seeks comments on this point, in particular, and also on the general issue of rating two-capacity coil-only units. If there is sufficient response, DOE would consider addressing these issues in a future rulemaking.

V. Approval of the Office of the Secretary

The Secretary of Energy has approved publication of today's Notice of Proposed Rulemaking.

List of Subjects in 10 CFR Part 430

Administrative practice and procedure, Energy conservation, Household appliances.

Issued in Washington, DC, on June 30, 2006.

Alexander A. Karsner,

Assistant Secretary, Energy Efficiency and Renewable Energy.

For the reasons set forth in the preamble, the Department proposes to amend part 430 of Chapter II of Title 10, Code of Federal Regulations, to read as follows:

PART 430—ENERGY CONSERVATION PROGRAM FOR CONSUMER PRODUCTS

1. The authority citation for part 430 continues to read as follows:

Authority: 42 U.S.C. 6291–6309; 28 U.S.C. 2461 note.

2. Section 430.2 is amended in subpart A by revising the definition of ''coil family'' and adding definitions of ''ARM/simulation adjustment factor,'' ''indoor unit,'' ''outdoor unit,'' ''private labeler'' and ''tested combination,'' in alphabetical order, to read as follows:

§ 430.2 Definitions.

* * * * *

ARM/simulation adjustment factor means a factor used to improve the accuracy of a DOE-approved alternative rating method (ARM) for untested split system central air conditioners or heat pumps. The adjustment factor associated with each outdoor unit shall be set such that it reduces the difference between the SEER (HSPF) determined using the ARM and the tested rating for the highest sales volume combination. The ARM/simulation adjustment factor is an integral part of the ARM and must be a DOE-approved element in accordance with 10 CFR 430.24(m)(4) to (m)(6).

* * * * *

Coil family means:

(1) A group of coils with the same basic design features that affect the heat exchanger performance. Examples of particular features in different categories are:

(i) General configuration: A-shape, V-shape, slanted or flat top.

(ii) Heat transfer surface on the refrigerant side: flat, grooved.

(iii) Heat transfer surface on the air side: flat, wavy, louver, lanced.

(iv) Tube material: copper, aluminum.

(v) Fin material: copper, aluminum.

(vi) Coil circuitry.

(2) When a group of coils has all these features in common, it constitutes a ''coil family.''

* * * * *

Indoor unit means a component of a split-system central air conditioner or heat pump that is designed to transfer heat between the refrigerant and the indoor air, and which consists of an indoor coil, a cooling mode expansion device, and may include an air moving device.

* * * * *

Outdoor unit means a component of a split-system central air conditioner or heat pump that is designed to transfer heat between the refrigerant and the outdoor air, and which consists of an outdoor coil, compressor(s), an air moving device, and in addition for heat pumps, a heating mode expansion device, reversing valve, and defrost controls.

* * * * *

Private labeler means an owner of a brand or trademark on the label of a consumer product which bears a private label. A consumer product bears a private label if:

(1) Such product (or its container) is labeled with the brand or trademark of

a person other than a manufacturer of such product,

(2) The person with whose brand or trademark such product (or container) is labeled has authorized or caused such product to be so labeled, and

(3) The brand or trademark of a manufacturer of such product does not appear on such label.

* * * * *

Tested combination means a split system with multiple indoor coils having the following features:

(1) The basic model of a system used as a tested combination shall consist of one outdoor unit, with one or more compressors, that is matched with between 2 and 5 indoor units designed for individual operation.

(2) The indoor units shall—

(i) Represent the highest sales volume type models;

(ii) Together, have a capacity that is between 95% and 105% of the capacity of the outdoor unit;

(iii) Not, individually, have a capacity that is greater than 50% of the capacity of the outdoor unit;

(iv) Have a fan speed that is consistent with the manufacturer's specifications; and

(v) All have the same external static pressure.

* * * * *

3. Section 430.23 is amended in subpart B by revising paragraph (m)(5) to read as follows:

§ 430.23 Test procedure for measures of energy consumption.

* * * * *

(m) * * *

(5) All measures of energy consumption shall be determined by the test method as set forth in appendix M to this subpart; or by an alternate rating method set forth in § 430.24(m)(4) as approved by the Assistant Secretary for Energy Efficiency and Renewable Energy in accordance with § 430.24(m)(5).

* * * * *

4. Section 430.24 is amended in subpart B by revising paragraph (m) to read as follows:

§ 430.24 Units to be tested.

* * * * *

(m)(1) For central air conditioners and heat pumps, each single-package system, and each condensing unit (outdoor unit) of a split-system, when combined with a selected indoor unit, shall have a sample of sufficient size tested in accordance with the applicable provisions of this subpart. To be included in the sample population, any pre-production units must have been fabricated using the same tooling as used for full-production units. The represented values for any model of single-package system, or for any model of a tested split-system combination shall be assigned such that—

(i) Any represented value of estimated annual operating cost, energy consumption or other measure of energy consumption of the central air conditioner or heat pump for which consumers would favor lower values shall be no less than the higher of:

(A) The mean of the sample; or

(B) The upper 90-percent confidence limit of the true mean divided by 1.05; and

(ii) Any represented value of the energy efficiency or other measure of energy consumption of the central air conditioner or heat pump for which consumers would favor higher values shall be no greater than the lower of:

(A) The mean of the sample; or

(B) The lower 90-percent confidence limit of the true mean divided by 0.95.

(iii) For heat pumps, all units of the sample population shall be tested in both the cooling and heating modes and the results used for determining the heat pump's certified SEER and HSPF ratings in accordance with paragraph (m)(1)(ii) of this section. When the manufacturer calculates SEER and HSPF ratings in accordance with paragraph (m)(1)(ii) of this section, and the value of one descriptor (SEER or HSPF) is equal to or greater than the value the manufacturer will certify in accordance with 10 CFR 430.62, while the other descriptor (HSPF or SEER) is below the value the manufacturer will certify, one or more additional units may be tested in the operating mode (cooling or heating, but not both) that corresponds to this marginal rating, and the results included in the sample population for calculating the marginal descriptor.

(2) For split-system air conditioners and heat pumps, the model of indoor unit selected for tests pursuant to paragraph (m)(1) of this section shall be the indoor unit manufactured by the outdoor unit (or system) manufacturer that is likely to have the largest volume of retail sales in combination with the particular model of outdoor unit. For combinations that have more than one indoor unit, a ''tested combination,'' as defined in 10 CFR 430.2, shall be used for tests pursuant to paragraph (m)(1) of this section. Components of similar design may be substituted without requiring additional testing if the represented measures of energy consumption continue to satisfy the applicable sampling provisions of paragraphs (m)(1)(i) and (m)(1)(ii) of this section. However, for any split-system air conditioner having a single-speed compressor, the indoor unit selected for tests pursuant to paragraph (m)(1) of this section shall be the indoor *coil-only* unit manufactured by the system manufacturer that is likely to have the largest volume of retail sales with the particular model of outdoor unit. This *coil-only* requirement is annulled for split-system air conditioners that are only sold and installed with *blower-coil* indoor units (e.g., mini-splits, multi-splits, small-duct high-velocity, and through-the-wall units) and any other outdoor units that are designed solely for application with OEM-supplied blower-coils and thus have features that prevent their installation with third-party coil-only indoor units. This coil-only requirement does not apply to split-system heat pumps. For every other split-system combination that includes the same model of outdoor unit but a different model of indoor unit, whether the indoor unit is manufactured by the same manufacturer or by a component manufacturer, either—

(i) A sample of sufficient size, comprised of production and/or pre-production units, shall be tested as complete systems with the resulting ratings for the outdoor unit-indoor unit combination obtained in accordance with paragraphs (m)(1)(i) and (m)(1)(ii) of this section; any pre-production units included in the sample population must have been fabricated using the same tooling as used for the full production units; or

(ii) The representative values of the measures of energy consumption shall be based on an alternative rating method (ARM) that has been approved by DOE in accordance with the provisions of paragraphs (m)(4) through (m)(6) of this section.

(3) Whenever the representative values of the measures of energy consumption, as determined by the provisions of paragraph (m)(2)(ii) of this section, do not agree within five percent of the representative values of the measures of energy consumption as determined by actual testing, the representative values determined by actual testing shall be used.

(4) The basis of the alternative rating method referred to in paragraph (m)(2)(ii) of this section shall be a representation of the test data and calculations of a mechanical vapor-compression refrigeration cycle. The major components in the refrigeration cycle shall be modeled as ''fits'' to manufacturer performance data or by graphic or tabular performance data. Heat transfer characteristics of coils may be modeled as a function of face area, number of rows, fins per inch,

refrigerant circuitry, air-flow rate and entering-air enthalpy. Additional performance-related characteristics to be considered may include type of expansion device, refrigerant flow rate through the expansion device, power of the indoor fan and cyclic-degradation coefficient. Ratings for untested combinations shall be derived from the ratings of the tested highest-sales-volume combination (HSVC), or from the tested combination. The SEER and/or HSPF ratings for an untested combination shall be set equal to or less than the lower of:

(i) The SEER and HSPF calculated using the alternative rating method (ARM), as adjusted based on the maximum allowed ARM/simulation adjustment factor. This adjustment factor is allowed in cases in which the manufacturer uses laboratory data from the HSVC testing to adjust its ARM or a simulation subcomponent and then applies the factor to ratings for untested combinations having the same outdoor unit. This adjustment factor, if used, shall not cause a change in ratings greater than five percent compared to the result of the ARM without the adjustment factor; or

(ii) Five percent higher than the ratings of the tested HSVC. This five percent limit only applies when the indoor unit of both the untested combination and the HSVC is a coil-only design (i.e., no indoor blower). Ratings above this limit can only be obtained for the non-HSVC by testing in accordance with paragraph (m)(1)(ii) of this section.

(5) Manufacturers or private labelers who elect to use an alternative rating method for determining measures of energy consumption under paragraphs (m)(2)(ii) and (m)(4) of this section must submit a request for DOE to review the alternative rating method. Send the request to the Assistant Secretary of Energy Efficiency and Renewable Energy, 1000 Independence Avenue, SW., Washington, DC 20585–0121. Approval must be received from the Assistant Secretary to use the alternative method before the alternative method may be used for rating split system central air conditioners and heat pumps. If a manufacturer has a DOE-approved ARM for products also distributed in commerce by a private labeler, the ARM may also be used by the private labeler for rating these products.

(6) Each request to DOE for approval of an alternative rating method shall include:

(i) The name, mailing address, telephone number, and e-mail address of the official representing the manufacturer.

(ii) Complete documentation of the alternative rating method to allow DOE to evaluate its technical adequacy. The documentation shall include a description of the methodology, state any underlying assumptions, and explain any correlations. The documentation should address how the method accounts for the cyclic-degradation coefficient, the type of expansion device, and, if applicable, the indoor fan-off delay. The requestor shall submit any computer programs—including spreadsheets—having less than 200 executable lines that implement the ARM. Longer computer programs must be identified and sufficiently explained, as specified above, but their inclusion in the initial submittal package is optional. Applicability or limitations of the ARM (e.g., only covers single-speed units when operating in the cooling mode, covers units with rated capacities of 3 tons or less, not applicable to the manufacturer's product line of non-ducted systems, etc.) shall be stated in the documentation.

(iii)(A) Complete test data from laboratory tests on four mixed (i.e., non-highest-sales-volume combination) systems per each ARM. The four mixed systems must include four different indoor units and at least two different outdoor units. A particular model of outdoor unit may be tested with up to two of the four indoor units. The four systems must include two low-capacity mixed systems and two high-capacity mixed systems. The low-capacity mixed systems may have any capacity. The rated capacity of each high-capacity mixed system must be at least a factor of two higher than its counterpart low-capacity mixed system.

(B) The four indoor units must come from at least two different coil families, with a maximum of two indoor units coming from the same coil family. Data for two indoor units from the same coil family, if submitted, must come from testing with one of the ''low-capacity mixed systems'' and one of the ''high capacity mixed systems.'' A mixed system indoor coil may come from the same coil family as the highest-sales-volume-combination indoor unit (i.e., the ''matched'' indoor unit) for the particular outdoor unit. Data on mixed systems where the indoor unit is now obsolete will be accepted towards the ARM-validation submittal requirement if it is from the same coil family as other indoor units still in production.

(C) The first two sentences of paragraph (m)(6)(iii)(B) of this section shall not apply if the manufacturer offers indoor units from only one coil family. In this case only, all four indoor coils must be selected from this one coil family. If approved, the ARM shall be specifically limited to applications for this one coil family.

(iv) All product information on each mixed system indoor unit, each matched system indoor unit, and each outdoor unit needed to implement the proposed ARM. The calculated ratings for the four mixed systems, as determined using the proposed ARM, shall be provided along with any other related information that will aid the verification process.

(7) Manufacturers that elect to use an alternative rating method for determining measures of energy consumption under paragraphs (m)(2)(ii) and (m)(4) of this section must either subject a sample of their units to independent testing on a regular basis, e.g., through a voluntary certification program, or have the representations reviewed and certified by an independent state-registered professional engineer who is not an employee of the manufacturer. The registered professional engineer is to certify that the results of the alternative rating procedure accurately represent the energy consumption of the unit(s). The manufacturer is to keep the registered professional engineer's certifications on file for review by DOE for as long as said combination is made available for sale by the manufacturer. Any proposed change to the alternative rating method must be approved by DOE prior to its use for rating.

(8) Manufacturers who choose to use computer simulation or engineering analysis for determining measures of energy consumption under paragraphs (m)(2)(ii) through (m)(6) of this section shall permit representatives of the Department of Energy to inspect for verification purposes the simulation method(s) and computer program(s) used. This inspection may include conducting simulations to predict the performance of particular outdoor unit—indoor unit combinations specified by DOE, analysis of previous simulations conducted by the manufacturer, or both.

* * * * *

Appendix M—[Amended]

5. Appendix M to subpart B of part 430 is amended:

a. In section 1. Definitions:

1. Section 1.5 is amended by removing ''23–93'' and adding in its place ''23–05''; and by removing ''1993'' and adding in its place ''2005.''

2. Section 1.6 is amended by removing ''37–88'' and adding in its place ''37–05''; and by removing ''1988'' and adding in its place ''2005.''

3. Section 1.12 is amended by adding ''RA(05)'' after ''116–95''; and adding ''and reaffirmed in 2005'' after ''1995.''

4. Section 1.37 is revised to read as set forth below.

b. In section 2, Testing Conditions:

1. Sections 2.1a, 2.2a, 2.2b, 2.2.3, 2.2.5, 2.4.1, and 2.4.2 are revised to read as set forth below.

2. Section 2.5.3 is amended by revising the first sentence to read as set forth below.

3. New section 2.5.4.3 is added to read as set forth below.

4. Section 2.6a is amended by adding in the first sentence ''(RA05)'' after ''116–95.''

5. Section 2.6b is amended in the second sentence, and in the last sentence, by removing ''37–88'' and adding in its place ''37–05.''

6. Section 2.10.2 is amended in the third and fourth sentences, by removing ''37–88'' and adding in its place ''37–05.''

7. Section 2.10.3 is amended in the second sentence, by removing ''7.6.2,'' and adding in its place ''7.5.2,'' and by removing ''37–88'' and adding in its place ''37–05'' in the second and third sentences.

8. Section 2.11a is amended in the first sentence, by removing ''37–88'' and adding in its place ''37–05.''

9. Section 2.13 is amended in the second sentence, by removing ''37–88'' and adding in its place ''37–05.''

c. In section 3, Testing Procedures:

1. Section 3.1.1 is amended in the seventh sentence, by removing ''37–88'' and adding in its place ''37–05.''

2. Section 3.1.4.1.1 title is revised and Table 2 to paragraph (c) is revised to read as set forth below.

3. Section 3.1.5 is amended in the first sentence by removing ''37–88'' and adding in its place ''37–05.''

4. Section 3.1.6 is amended in the first and second sentences, by removing ''7.8.3.1 and 7.8.3.2'' and adding in its place ''7.7.2.1 and 7.7.2.2,'' and in the first sentence, by removing ''37–88'' and adding in its place ''37–05'', and by adding a new sentence after the second sentence, to read as set forth below.

5. Sections 3.2.3a. and 3.2.3d. are revised to read as set forth below.

6. Table 5 to section 3.2.3 is revised to read as set forth below.

7. Section 3.2.4 is amended by adding a new paragraph c to read as set forth below.

8. Table 6 to section 3.2.4 is revised to read as set forth below.

9. Section 3.3b is amended in both the first and second sentences, by removing ''Table 5,'' and adding in its place ''Table 3,'' and in the first sentence by removing ''37–88'' and adding in its place ''37–05.''

10. Section 3.3c is amended in the first sentence by removing ''section 7.3.3.1 of ASHRAE Standard 37–88,'' and adding in its place ''sections 7.3.3.1 and 7.3.3.3 of ASHRAE Standard 37–05.''

11. The title of sections 3.4 and 3.5 is revised to read as set forth below.

12. Section 3.5e is revised to read as set forth below.

13. The first two sentences of section 3.5.3 are revised to read as set forth below.

14. Section 3.6.3 is revised to read as set forth below.

15. Table 11 to section 3.6.3 is revised to read as set forth below.

16. Section 3.6.4 is amended by adding a new paragraph c to read as set forth below.

17. Table 12 to section 3.6.4 is revised to read as set forth below.

18. Section 3.7a is amended in the fifth sentence by removing ''Table 5 of ASHRAE Standard 37–88'' and adding in its place ''Table 3 of ASHRAE Standard 37–05,'' and in the sixth sentence, by removing ''Table 5'' and adding in its place ''Table 3.''

19. Section 3.7b is amended by revising the first sentence to read as set forth below.

20. The title of section 3.8 is revised to read as set forth below.

21. The introductory text (preceding the equation) for section 3.8.1 is revised to read as set forth below.

22. Section 3.9c is revised to read as set forth below.

23. Section 3.9f is amended by revising the fifth sentence to read as set forth below.

24. Section 3.9.1a is amended by adding a new sentence at the end of the section directly before section 3.9.1.b to read as set forth below.

25. Section 3.11.1.3b is revised to read as set forth below.

26. Section 3.11.2a is amended by revising the seventh sentence to read as set forth below.

27. Section 3.11.2b is revised to read as set forth below.

28. Section 3.11.3 is revised to read as set forth below.

d. In section 4, CALCULATIONS OF SEASONAL PERFORMANCE DESCRIPTORS:

1. Section 4.1.3 is amended by revising the introductory text, equations 4.1.3–1 and 4.1.3–2, and the paragraph preceding equation 4.1.3–3 to read as set forth below.

2. Section 4.1.3.3 is amended by revising the equation for PLFj and the text between the equation and Table 16 to read as set forth below.

3. Section 4.1.4.2 is amended by adding text at the end of the section to read as set forth below.

4. Section 4.2.3.3 is amended by revising the equation for PLFj and the text following the equation to read as set forth below.

5. Section 4.2.4.2 is amended by adding text at the end of the section to read as set forth below.

The additions and revisions read as follows:

Appendix M to Subpart B of Part 430—Uniform Test Method for Measuring the Energy Consumption of Central Air Conditioners and Heat Pumps

* * * * *

1. Definitions

* * * * *

1.37 Standard Air means dry air having a mass density of 0.075 lb/ft^3.

* * * * *

2. Testing Conditions

* * * * *

2.1 *Test room requirements.* a. Test using two side-by-side rooms, an indoor test room and an outdoor test room. For multiple-split air conditioners and heat pumps (see Definition 1.30), however, use as many available indoor test rooms as needed to accommodate the total number of indoor units. These rooms must comply with the requirements specified in sections 8.1.2 and 8.1.3 of ASHRAE Standard 37–05 (incorporated by reference, see § 430.22).

* * * * *

2.2 *Test unit installation requirements.* a. Install the unit according to section 8.2 of ASHRAE Standard 37–05 (incorporated by reference, see § 430.22). With respect to interconnecting tubing used when testing split-systems, however, follow the requirements given in section 6.1.3.5 of ARI Standard 210/240–2003 (incorporated by reference, see § 430.22). When testing triple-split systems (see Definition 1.44), use the tubing length specified in section 6.1.3.5 of ARI Standard 210/240–2003 (incorporated by reference, see § 430.22) to connect the outdoor coil, indoor compressor section, and indoor coil while still meeting the requirement of exposing 10 feet of the tubing to outside conditions. When testing non-ducted systems having multiple indoor coils, connect each indoor fan-coil to the outdoor unit using: (a) 25 feet of tubing, or (b) tubing furnished by the manufacturer, whichever is longer. If they are needed to make a secondary measurement of capacity, install refrigerant pressure measuring instruments as described in section 8.2.5 of ASHRAE Standard 37–05 (incorporated by reference, see § 430.22). Refer to section 2.10 of this Appendix to learn which secondary methods require refrigerant pressure measurements. At a minimum, insulate the low-pressure line(s) of a split-system with insulation having an inside diameter that matches the refrigerant tubing and a nominal thickness of ½ inch.

b. For units designed for both horizontal and vertical installation or for both up-flow and down-flow vertical installations, the manufacturer must specify the orientation used for testing. Conduct testing with the following installed:

(1) The most restrictive filter(s);

(2) Supplementary heating coils; and

(3) Other equipment specified as part of the unit, including all hardware used by a heat comfort controller if so equipped (see Definition 1.28). For small-duct, high-velocity systems, configure all balance dampers or restrictor devices on or inside the unit to fully open or lowest restriction.

* * * * *

2.2.3 Special requirements for multi-split air conditioners and heat pumps, and systems composed of multiple mini-split units (outdoor units located side-by-side) that would normally operate using two or more indoor thermostats. Allow the controls of the multi-split or multiple mini-split air conditioner or heat pump (see Definitions 1.30 and 1.29, respectively) to determine the number of indoor coils, if any, whose fans are turned off during a given test. For any indoor coil whose fan is automatically turned off during a test, take steps to cease forced airflow through this indoor coil and block its outlet duct. Because these types of systems will have more than one indoor fan and possibly multiple outdoor fans and compressor systems, references in this test procedure to a single indoor fan, outdoor fan, and compressor means all indoor fans, all outdoor fans, and all compressor systems that are active during a test.

* * * * *

2.2.5 Charging according to the ''manufacturer's published instructions,'' as stated in section 8.2 of ASHRAE Standard 37–05 (incorporated by reference, see § 430.22), means the manufacturer's installation instructions that come packaged with the unit. If a unit requires charging but the installation instructions do not specify a charging procedure, then evacuate the unit and add the nameplate refrigerant charge. Where the manufacturer's installation instructions contain two sets of refrigerant charging criteria, one for field installations and one for lab testing, use the field installation criteria. For third-party testing, the test laboratory may consult with the manufacturer about the refrigerant charging procedure and make any needed corrections so long as they do not contradict the published installation instructions. The manufacturer may specify an alternative charging criteria to the third-party laboratory so long as the manufacturer thereafter revises the published installation instructions accordingly.

* * * * *

2.4.1 Outlet plenum for the indoor unit. a. Attach a plenum to the outlet of the indoor coil. (Note: for some packaged systems, the indoor coil may be located in the outdoor test room.) For non-ducted systems having multiple indoor coils, attach a plenum to each indoor coil outlet. Add a static pressure tap to each face of the (each) outlet plenum, if rectangular, or at four evenly distributed locations along the circumference of an oval or round plenum. Create a manifold that connects the four static pressure taps. Figure 1 shows two of the three options allowed for the manifold configuration; the third option is the broken-ring, four-to-one manifold configuration that is shown in Figure 7a of ASHRAE Standard 37–05 (incorporated by reference, see § 430.22). See Figures 7a, 7b, 7c, and 8 of ASHRAE Standard 37–05 (incorporated by reference, see § 430.22) for the cross-sectional dimensions and minimum length of the (each) plenum and the locations for adding the static pressure taps for units tested with and without an indoor fan installed. For a non-ducted system having multiple indoor coils, have all outlet plenums discharge air into a single common duct. At the plane where each plenum enters the common duct, install an adjustable airflow damper and use it to equalize the static pressure in each plenum. For multi-split units tested using more than one indoor test room, create a common duct within each test room that contains multiple indoor coils. Each common duct should feed a separate outlet air temperature grid (section 2.5.4) and airflow measuring apparatus (section 2.6).

b. For small-duct, high-velocity systems, install an outlet plenum that has a diameter that is equal to or less than the value listed below. The limit depends only on the cooling Full-Load Air Volume Rate (see section 3.1.4.1.1) and is effective regardless of the flange dimensions on the outlet of the unit (or an air supply plenum adapter accessory, if installed in accordance with the manufacturers installation instructions).

Cooling full-load air volume rate (SCFM)	Maximum diameter* of outlet plenum (inches)
≤ 500	6
501 to 700	7
701 to 900	8
901 to 1100	9
1101 to 1400	10
1401 to 1750	11

*If the outlet plenum is rectangular, calculate its equivalent diameter using (4A)/P, where A is the area and P is the perimeter of the rectangular plenum, and compare it to the listed maximum diameter.

2.4.2 Inlet plenum for the indoor unit. Install an inlet plenum when testing a coil-only indoor unit or a packaged system where the indoor coil is located in the outdoor test room. Add static pressure taps at the center of each face of this plenum, if rectangular, or at four evenly distributed locations along the circumference of an oval or round plenum. Make a manifold that connects the four static-pressure taps using one of the three configurations specified in section 2.4.1. See Figures 7b, 7c, and Figure 8 of ASHRAE Standard 37–05 (incorporated by reference, see § 430.22) for cross-sectional dimensions, the minimum length of the inlet plenum, and the locations of the static-pressure taps. When testing a ducted unit having an indoor fan (and the indoor coil is in the indoor test room), the manufacturer has the option to test with or without an inlet plenum installed. Space limitations within the test room may dictate that the manufacturer choose the latter option. If used, construct the inlet plenum and add the four static-pressure taps as shown in Figure 8 of ASHRAE Standard 37–05 (incorporated by reference, see § 430.22). Manifold the four static-pressure taps using one of the three configurations specified in section 2.4.1. Never use an inlet plenum when testing a non-ducted system.

* * * * *

2.5.3 Section 6.5.2 of ASHRAE Standard 37–05 (incorporated by reference, see § 430.22) describes the method for fabricating static pressure taps. * * *

* * * * *

2.5.4.3 *Minimizing air leakage.* For small-duct, high-velocity systems, install an air damper near the end of the interconnecting duct, just prior to the transition to the airflow measuring apparatus of Section 2.6. In order to minimize air leakage, adjust this damper such that the pressure in the receiving chamber of the airflow measuring apparatus is no more than 0.5 inches of water higher than the surrounding test room ambient. In lieu of installing a separate damper, use the outlet air damper box of Section 2.5 and 2.5.4.1 if it allows variable positioning. Also apply these steps to any conventional indoor blower unit that creates a static pressure within the receiving chamber of the airflow measuring apparatus that exceeds the test room ambient pressure by more than 0.5 inches of water.

* * * * *

3. Testing Procedures

* * * * *

3.1.4.1.1 Cooling Full-Load Air Volume Rate for Ducted Units. * * *

* * * * *

c. * * *

TABLE 2.—MINIMUM EXTERNAL STATIC PRESSURE FOR DUCTED SYSTEMS TESTED WITH AN INDOOR FAN INSTALLED

Rated cooling (1) or heating (2) capacity (Btu/h)	Minimum external resistance (3) (inches of water)	
	All other systems	Small-duct, high-velocity systems (4, 5)
Up Thru 28,800	0.10	1.10

TABLE 2.—MINIMUM EXTERNAL STATIC PRESSURE FOR DUCTED SYSTEMS TESTED WITH AN INDOOR FAN INSTALLED—Continued

Rated cooling [1] or heating [2] capacity (Btu/h)	Minimum external resistance [3] (inches of water)	
	All other systems	Small-duct, high-velocity systems [4, 5]
29,000 to 42,500	0.15	1.15
43,000 and Above	0.20	1.20

[1] For air conditioners and heat pumps, the value cited by the manufacturer in published literature for the unit's capacity when operated at the A or A_2 Test conditions.
[2] For heating-only heat pumps, the value the manufacturer cites in published literature for the unit's capacity when operated at the H1 or $H1_2$ Test conditions.
[3] For ducted units tested without an air filter installed, increase the applicable tabular value by 0.08 inches of water.
[4] See Definition 1.35 to determine if the equipment qualifies as a small-duct, high-velocity system.
[5] If a closed-loop, air-enthalpy test apparatus is used on the indoor side, limit the resistance to airflow on the inlet side of the indoor blower coil to a maximum value of 0.1 inches of water. Impose the balance of the airflow resistance on the supply side.

* * * * *

3.1.6 * * * (**Note:** In the first printing of ASHRAE Standard 37–2005, the second IP equation for Q_{mi} should read, $1097CA_n\sqrt{P_v V'_n}$.) * * *

* * * * *

3.2.3 Tests for a unit having a two-capacity compressor. (See Definition 1.45.)

a. Conduct four steady-state wet coil tests: the A_2, B_2, B_1, and F_1 Tests. Use the two optional dry-coil tests, the steady-state G_1 Test and the cyclic I_1 Test, to determine the cooling-mode cyclic-degradation coefficient, C^c_D. If the two optional tests are not conducted, assign C^c_D the default value of 0.25. Table 5 specifies test conditions for these six tests.

* * * * *

d. If a two-capacity air conditioner or heat pump locks out low-capacity operation at higher outdoor temperatures, then use the two optional dry-coil tests, the steady-state C_2 Test and the cyclic D_2 Test, to determine the cooling-mode cyclic-degradation coefficient that only applies to on/off cycling from high capacity, C^c_D (k = 2). If the two optional tests are not conducted, assign C^c_D (k = 2) the same value as determined or assigned for the low-capacity cyclic-degradation coefficient, [or equivalently, C^c_D (k = 1)].

TABLE 5.—COOLING MODE TEST CONDITIONS FOR UNITS HAVING A TWO-CAPACITY COMPRESSOR

Test description	Air entering indoor unit temperature (°F)		Air entering outdoor unit temperature (°F)		Compressor capacity	Cooling air volume rate
	Dry bulb	Wet bulb	Dry bulb	Wet bulb		
A_2 Test—required (steady, wet coil).	80	67	95	[1] 75	High	Cooling Full-Load.[2]
B_2 Test—required (steady, wet coil).	80	67	82	[1] 65	High	Cooling Full-Load.[2]
B_1 Test—required (steady, wet coil).	80	67	82	[1] 65	Low	Cooling Minimum.[3]
F_1 Test—required (steady, wet coil).	80	67	67	[1] 53.5	Low	Cooling Minimum.[3]
G_1 Test—optional (steady, dry-coil).	80	[4]	67	.....	Low	Cooling Minimum.[3]
I_1 Test—optional (cyclic, dry-coil).	80	[4]	67	.....	Low	[5]
C_2 Test—optional (steady, dry-coil).	80	[4]	82	.....	High	Cooling Full-Load.[2]
D_2 Test—optional (cyclic, dry-coil).	80	[4]	82	.....	High	[6]

[1] The specified test condition only applies if the unit rejects condensate to the outdoor coil.
[2] Defined in Section 3.1.4.1.
[3] Defined in Section 3.1.4.2.
[4] The entering air must have a low enough moisture content so no condensate forms on the indoor coil. DOE recommends using an indoor air wet-bulb temperature of 57 °F or less.
[5] Maintain the airflow nozzle(s) static pressure difference or velocity pressure during the ON period at the same pressure or velocity as measured during the C_1 Test.
[6] Maintain the airflow nozzle(s) static pressure difference or velocity pressure during the ON period at the same pressure or velocity as measured during the C_2 Test.

3.2.4 Tests for a unit having a variable-speed compressor. * * *

* * * * *

c. For multiple-split air conditioners and heat pumps (only), the following procedures supersede the above requirements: For all Table 6 tests specified for a minimum compressor speed, use the compressor speed specified by the manufacturer. The manufacturer should prescribe a speed that allows successful completion of the Table 6 tests while deviating as little as possible from the unit's actual lowest cooling-mode operating speed. The manufacturer must also specify the compressor speed used for the Table 6 E_V Test, a cooling-mode intermediate compressor speed that falls within ¼ and ¾ of the difference between the tested

maximum and minimum cooling-mode speeds. The manufacturer should prescribe an intermediate speed that is expected to yield the highest EER for the given E_V Test conditions.

TABLE 6.—COOLING MODE TEST CONDITION FOR UNITS HAVING A VARIABLE-SPEED COMPRESSOR

Test description	Air entering indoor unit temperature (°F)		Air entering outdoor unit temperature (°F)		Compressor speed	Cooling air volume rate
	Dry bulb	Wet bulb	Dry bulb	Wet bulb		
A_2 Test—required (steady, wet coil)	80	67	95	(1) 75	Maximum (2)	Cooling Full-Load.(3)
B_2 Test—required (steady—wet coil)	80	67	82	(1) 65	Maximum (2)	Cooling Full-Load.(3)
E_V Test—required (steady, wet coil)	80	67	87	(1) 69	Intermediate	Cooling Intermediate.(4)
B_1 Test—required (steady, wet coil)	80	67	82	(1) 65	Minimum	Cooling Minimum.(5)
F_1 Test—required (steady, wet coil)	80	67	67	(1) 53.5	Minimum	Cooling Minimum.(5)
G_1 Test (6)—optional (steady, dry-coil)	80	(6)	67		Minimum	Cooling Minimum.(5)
I_1 Test (6)—optional (cyclic, dry-coil)	80	(6)	67		Minimum	(7)

(1)The specified test condition only applies if the unit rejects condensate to the outdoor coil.
(2)Configured for the maximum continuous duty operation as allowed by the unit's controls.
(3)Defined in Section 3.1.4.1.
(4)Defined in Section 3.1.4.3.
(5)Defined in Section 3.1.4.2.
(6)The entering air must have a low enough moisture content so no condensate forms on the indoor coil. DOE recommends using an indoor air wet bulb temperature of 57 °F or less.
(7)Maintain the airflow nozzle(s) static pressure difference or velocity pressure during the ON period at the same pressure difference or velocity pressure as measured during the G_1 Test.

* * * * *

3.4 Test procedures for the optional steady-state dry-coil cooling-mode tests (the C, C_1, C_2, and G_1 Tests).

* * * * *

3.5 Test procedures for the optional cyclic dry-coil cooling-mode tests (the D, D_1, D_2, and I_1 Tests).

* * * * *

e. For consecutive compressor OFF/ON cycles, evaluate whether the below criterion for repeatable results is met. After completing a minimum of two complete OFF/ON compressor cycles, determine the overall cooling delivered and total electrical energy consumption during any subsequent data collection interval where the test tolerances given in Table 8 and the below criterion for repeatable results is satisfied.

$$1)\ \left|\Gamma_{m+1} - \Gamma_m\right| \le 0.05\ ^\circ\mathrm{F}\cdot\mathrm{hr},\ \text{and}$$

$$2)\ \left|\left(\frac{e_{cyc,dry}}{\Delta\tau_{cyc,dry}}\right)_{m+1} - \left(\frac{e_{cyc,dry}}{\Delta\tau_{cyc,dry}}\right)_m\right| \le 10\ \mathrm{W},$$

For the above criterion, m represents the cycle number and Γ, $e_{cyc,dry}$, and $\Delta\tau_{cyc,dry}$ are defined later in this same section. If available, use electric resistance heaters (see Section 2.1) to minimize the variation in the inlet air temperature.

* * * * *

3.5.3 Cooling-mode cyclic-degradation coefficient calculation. Use the two optional dry-coil tests to determine the cooling-mode cyclic-degradation coefficient, C^c_D. Append ''(k=2)'' to the coefficient if it corresponds to a two-capacity unit cycling at high capacity. If the two optional tests are not conducted, assign C^c_D the default value of 0.25. The default value for two-capacity units cycling at high capacity, however, is the low-capacity coefficient, i.e., C^c_D (k=2) =C^c_D. Evaluate C^c_D using the above results and those from the section 3.4 dry-coil steady-state test.* * *

* * * * *

3.6.3 Tests for a heat pump having a two-capacity compressor (see Definition 1.45), including two-capacity, northern heat pumps (see Definition 1.46). a. Conduct one Maximum Temperature Test ($H0_1$), two High Temperature Tests ($H1_2$ and $H1_1$), one Frost Accumulation Test ($H2_2$), and one Low Temperature Test ($H3_2$). Conduct an additional Frost Accumulation Test ($H2_1$) and Low Temperature Test ($H3_1$) if both of the following conditions exist:

1. Knowledge of the heat pump's capacity and electrical power at low compressor capacity for outdoor temperatures of 37 °F and less is needed to complete the section 4.2.3 seasonal performance calculations, and
2. The heat pump's controls allow low-capacity operation at outdoor temperatures of 37 °F and less.

If the above two conditions are met, an alternative to conducting the $H2_1$ Frost Accumulation is to use the following equations to approximate the capacity and electrical power:

$$\dot{Q}^{k=1}_h(35) = 0.90\cdot\left\{\dot{Q}^{k=1}_h(17) + 0.6\cdot\left[\dot{Q}^{k=1}_h(47) - \dot{Q}^{k=1}_h(17)\right]\right\}$$

$$\dot{E}^{k=1}_h(35) = 0.985\cdot\left\{\dot{E}^{k=1}_h(17) + 0.6\cdot\left[\dot{E}^{k=1}_h(47) - \dot{E}^{k=1}_h(17)\right]\right\}$$

Determine the quantities $\dot{Q}^{k=1}_h$ (47) and $\dot{E}^{k=1}_h$ (47) from the $H1_1$ Test and evaluate them according to Section 3.7. Determine the quantities $\dot{Q}^{k=1}_h$ (17)and $\dot{E}^{k=1}_h$ (17) from the $H3_1$ Test and evaluate them according to Section 3.10. b. Conduct the optional Maximum Temperature Cyclic Test ($H0C_1$) to determine the heating-mode cyclic-degradation coefficient, C^h_D. If this optional test is not conducted, assign C^h_D the default value of 0.25. If a two-capacity heat pump locks out low capacity operation at lower outdoor temperatures, conduct the optional High Temperature Cyclic Test ($H1C_2$) to determine the high-capacity heating-mode

cyclic-degradation coefficient, C^h_D (k=2). If this optional test at high capacity is not conducted, assign C^h_D (k=2) the same value as determined or assigned for the low-capacity cyclic-degradation coefficient, C^h_D [or equivalently, C^h_D (k=1)]. Table 11 specifies test conditions for these nine tests.

TABLE 11.—HEATING MODE TEST CONDITIONS FOR UNITS HAVING A TWO-CAPACITY COMPRESSOR

Test description	Air entering indoor unit temperature (°F)		Air entering outdoor unit temperature (°F)		Compressor capacity	Heating air volume rate
	Dry bulb	Wet bulb	Dry bulb	Wet bulb		
$H0_1$ Test (required, steady)	70	(max)60	62	56.5	Low	Heating Minimum.(1)
$H0C_1$ Test (optional, cyclic)	70	(max)60	62	56.5	Low	(2)
$H1_2$ Test (required, steady)	70	(max)60	47	43	High	Heating Full-Load.(3)
$H1C_2$ Test (optional, cyclic)	70	(max)60	47	43	High	(4)
$H1_1$ Test (required)	70	(max)60	47	43	Low	Heating Minimum.(1)
$H2_2$ Test (required)	70	(max)60	35	33	High	Heating Full-Load.(3)
$H2_1$ Test (5, 6) (required)	70	(max)60	35	33	Low	Heating Minimum.(3)
$H3_2$ Test (required, steady)	70	(max)60	17	15	High	Heating Full-Load.(3)
$H3_1$ Test (5) (required, steady)	70	(max)60	17	15	Low	Heating Minimum.(1)

(1) Defined in Section 3.1.4.5.
(2) Maintain the airflow nozzle(s) static pressure difference or velocity pressure during the ON period at the same pressure or velocity as measured during the $H0_1$ Test.
(3) Defined in Section 3.1.4.4.
(4) Maintain the airflow nozzle(s) static pressure difference or velocity pressure during the ON period at the same pressure or velocity as measured during the $H1_2$ Test.
(5) Required only if the heat pump's performance when operating at low compressor capacity and outdoor temperatures less than 37 °F is needed to complete the Section 4.2.3 HSPF calculations.
(6) If table note #5 applies, the Section 3.6.3 equations for $\dot{Q}^h_{k=1}$ (35) and $\dot{E}^h_{k=1}$ (17) may be used in lieu of conducting the $H2_1$ Test.

3.6.4 Tests for a heat pump having a variable-speed compressor.

* * * * *

c. For multiple-split heat pumps (only), the following procedures supersede the above requirements: For all Table 12 tests specified for a minimum compressor speed, use the compressor speed specified by the manufacturer. The manufacturer should prescribe a speed that allows successful completion of the Table 12 tests while deviating as little as possible from the heat pump's actual lowest heating-mode operating speed. The manufacturer must also specify the compressor speed used for the Table 12 $H2_V$ Test, a heating-mode intermediate compressor speed that falls within ¼ and ¾ of the difference between the tested maximum and minimum heating-mode speeds. The manufacturer should prescribe an intermediate speed that is expected to yield the highest COP for the given $H2_V$ Test conditions.

TABLE 12.—HEATING MODE TEST CONDITION FOR UNITS HAVING A VARIABLE-SPEED COMPRESSOR

Test description	Air entering indoor unit temperature (°F)		Air entering outdoor unit temperature (°F)		Compressor speed	Heating air volume rate
	Dry bulb	Wet bulb	Dry bulb	Wet bulb		
H01 Test (required, steady)	70	(max) 60	62	56.5	Minimum	Heating Minimum (1)
$H0C_1$ Test (optional, steady)	70	(max) 60	62	56.5	Minimum	(2)
$H1_2$ Test (required, steady)	70	(max) 60	47	43	Maximum (3)	Heating Full-Load (4)
$H1_1$ Test (required, steady)	70	(max) 60	47	43	Minimum	Heating Minimum (1)
$H1_N$ Test (optional, steady)	70	(max) 60	47	43	Cooling Mode Maximum.	Heating Nominal (5)
$H2_2$ Test (optional)	70	(max) 60	35	33	Maximum (3)	Heating Full-Load (4)
$H2_V$ Test	70	(max) 60	35	33	Intermediate	Heating Intermediate (6)
$H3_2$ Test (required, steady)	70	(max) 60	17	15	Maximum (3)	Heating Full-Load (4)

(1) Defined in Section 3.1.4.5.
(2) Maintain the airflow nozzle(s) static pressure difference or velocity pressure during an ON period at the same pressure or velocity as measured during the $H0_1$ Test.
(3) Configured for the maximum continuous duty operation as allowed by the unit's controls when heating.
(4) Defined in Section 3.1.4.4.
(5) Defined in Section 3.1.4.7.
(6) Defined in Section 3.1.4.6.

* * * * *

3.7 a. * * *

b. Calculate indoor-side total heating capacity as specified in sections 7.3.4.1 and 7.3.4.3 of ASHRAE Standard 37–05 (incorporated by reference, see § 430.22).

* * *

3.8 Test procedures for the optional cyclic heating mode tests (the $H0C_1$, H1C, $H1C_1$ and $H1C_2$ Tests).

* * * * *

3.8.1 Heating mode cyclic degradation coefficient calculation. Use the results from the optional cyclic test and the required steady-state test that were conducted at the same test conditions to determine the heating-mode cyclic-degradation coefficient, C^h_D. Add ''(k=2)'' to the coefficient if it corresponds to a two-capacity unit cycling at high capacity. If the optional test is not conducted, assign C^h_D the default value of

0.25. The default value for two-capacity units cycling at high capacity, however, is the low-capacity coefficient, i.e., $C^h_D(k = 2) = C^h_D$.

* * *

* * * * *

3.9 * * *

c. The official test period begins when the preliminary test period ends, at defrost termination. The official test period ends at the termination of the next occurring automatic defrost cycle. When testing a heat pump that uses a time-adaptive defrost control system (see Definition 1.42), however, manually initiate the defrost cycle that ends the official test period at the instant indicated by instructions provided by the manufacturer. If the heat pump has not undergone a defrost after 12 hours, immediately conclude the test and use the results from the full 12-hour period to calculate the average space heating capacity and average electrical power consumption. For the $H2_1$ Test, use a maximum official test period of 6 hours instead of 12 hours. For heat pumps that turn the indoor fan off during the defrost cycle, take steps to cease forced airflow through the indoor coil and block the outlet duct whenever the heat pump's controls cycle off the indoor fan. If it is installed, use the outlet damper box described in section 2.5.4.1 to affect the blocked outlet duct.

* * * * *

f. * * * Sample measurements used in calculating the air volume rate (refer to sections 7.7.2.1 and 7.7.2.2 of ASHRAE Standard 37–05 (incorporated by reference, see § 430.22)) at equal intervals that span 10 minutes or less. (Note: In the first printing of ASHRAE Standard 37–2005, the second IP equation for Q_{mi} should read:

$$1097CA_n\sqrt{P_V v'_n}\ .) * * *$$

* * * * *

3.9.1 Average space heating capacity and electrical power calculations.

a. * * *

To account for the effect of duct loses, adjust Q^k_h (35) in accordance with section 7.3.4.3 of ASHRAE Standard 37–05.

* * * * *

3.11.1.3 Official test.

* * * * *

b. For space cooling tests, calculate capacity from the outdoor air-enthalpy measurements as specified in section 7.3.3.2 of ASHRAE Standard 37–05 (incorporated by reference, see § 430.22). Calculate heating capacity based on outdoor air-enthalpy measurements as specified in section 7.3.4.2 of the same ASHRAE Standard. Adjust outdoor-side capacities according to section 7.3.3.4 of ASHRAE Standard 37–05 (incorporated by reference, see § 430.22) to account for line losses when testing split systems. Do not correct the average electrical power measurement as described in section 8.6.2 of ASHRAE Standard 37–05 (incorporated by reference, see § 430.22).

3.11.2 If using the Compressor Calibration Method as the secondary test method.

a. * * * Otherwise, conduct the calibration tests according to ASHRAE Standard 23–05 (incorporated by reference, see § 430.22), ASHRAE Standard 41.9–00 (incorporated by reference, see § 430.22), and section 7.4 of ASHRAE Standard 37–05 (incorporated by reference, see § 430.22).

b. Calculate space cooling and space heating capacities using the compressor calibration method measurements as specified in section 7.4.5 and 7.4.6 respectively, of ASHRAE Standard 37–05 (incorporated by reference, see § 430.22).

3.11.3 If using the Refrigerant-Enthalpy Method as the secondary test method. Conduct this secondary method according to section 7.5 of ASHRAE Standard 37–05 (incorporated by reference, see § 430.22). Calculate space cooling and heating capacities using the refrigerant-enthalpy method measurements as specified in sections 7.5.4 and 7.5.5, respectively, of the same ASHRAE Standard.

4. Calculations of Seasonal Performance Descriptors

* * * * *

4.1.3 SEER calculations for an air conditioner or heat pump having a two-capacity compressor. Calculate SEER using Equation 4.1–1. Evaluate the space cooling capacity, $Q^{k=1}_c(T_j)$, and electrical power consumption, $E^{k=1}_c(T_j)$, of the test unit when operating at low compressor capacity and outdoor temperature T_j using,

$$\dot{Q}^{k=1}_c(T_j) = \dot{Q}^{k=1}_c(67) + \frac{\dot{Q}^{k=1}_c(82) - Q^{k=1}_c(67)}{82-67}\cdot(T_j - 67) \qquad (4.1.3\text{-}1)$$

$$\dot{E}^{k=1}_c(T_j) = E^{k=1}_c(67) + \frac{E^{k=1}_c(82) - E^{k=1}_c(67)}{82-67}\cdot(T_j - 67) \qquad (4.1.3\text{-}2)$$

where $Q^{k=1}_c(82)$ and $E^{k=1}_c(82)$ are determined from the B_1 Test, $Q^{k=1}_c(67)$ and $E^{k=1}_c(67)$ and $E^{k=1}_c(67)$ are determined from the F_1 Test, and all are calculated as specified in section 3.3. Evaluate the space cooling capacity, $Q^{k=2}_c(T_j)$, and electrical power consumption, $E^{k=2}_c(T_j)$, of the test unit when operating at high compressor capacity and outdoor temperature T_j using,

* * * * *

4.1.3.3 * * *

$PLF_j = 1 - C^c_D(k = 2) . [1 - X^{k=2}(T_j)]$, the part load factor, dimensionless.

Obtain the fraction bin hours for the cooling season,

$$\frac{n_j}{N},$$

from Table 16. Use Equations 4.1.3–3 and 4.1.3–4, respectively, to evaluate $Q^{k=2}_c(T_j)$ and $E^{k=2}_c(T_j)$. Use $C^c_D(k=2)$ as determined in sections 3.2.3 and 3.5.3.

* * * * *

4.1.4.2 * * *

For multiple-split air conditioners and heat pumps (only), the following procedures supersede the above requirements for calculating $EER^{k=i}(T_j)$. For each temperature bin where $T_1 < T_j < T_v$,

$$EER^{k=i}(T_j) = EER^{k=1}(T_1) + \frac{EER^{k=v}(T_v) - EER^{k=1}(T_1)}{T_v - T_1}\cdot(T_j - T_1)\cdot$$

For each temperature bin where $T_v \le T_j < T_2$,

$$EER^{k=i}(T_j) = EER^{k=v}(T_v) + \frac{EER^{k=2}(T_2) - EER^{k=v}(T_v)}{T_2 - T_v}\cdot(T_j - T_v)\cdot$$

* * * * *

4.2.3.3 * * * .

$PLF_j = 1 - C^h_D (k = 2) \cdot [1 - X^{k=2} (T^j)]$.

Use C^h_D (k = 2) as determined in sections 3.6.3 and 3.8.1. Determine the low temperature cut-out factor, $\delta'(T_j)$, using Equation 4.2.3–3.

* * * * *

4.2.4.2 * * *

For multiple-split air conditioners and heat pumps (only), the following procedures supersede the above requirements for calculating $COP^{k=i}_h (T_j)$. For each temperature bin where $T_3 > T_j > T_{vh}$,

$$COP_h^{k=i}\left(T_j\right) = COP_h^{k=1}\left(T_3\right) + \frac{COP_h^{k=v}\left(T_{vh}\right) - COP_h^{k=1}\left(T_3\right)}{T_{vh} - T_3} \cdot \left(T_j - T_3\right)."$$

For each temperature bin where $T_{vh} \geq T_j > T_4$,

* * * * *

$$COP_h^{k=i}(T_j) = COP_h^{k=v}\ (T_{vh}) + \frac{COP_h^{k=2}(T_4) - COP_h^{k=v}(T_{vh})}{T_4 - T_{vh}} \cdot (T_j - T_{vh}) \cdot "$$

* * * * *

6. Section 430.62 is amended in subpart F by revising paragraphs (a)(4)(i) and (ii) to read as follows:

§ 430.62 Submission of data.

(a) * * *

(4) * * *

(i) Central air conditioners, the seasonal energy efficiency ratio. For central air conditioners whose seasonal energy efficiency ratio is based on an installation that includes a particular model of furnace, the certification report shall include the product class (as denoted in § 430.32, manufacturer's name, private labeler's name (if applicable) and manufacturer's model number of the furnace.

(ii) Central air conditioning heat pumps, the seasonal energy efficiency ratio and heating seasonal performance factor. For central air conditioner heat pumps whose seasonal energy efficiency ratio and/or heating seasonal performance factor is based on an installation that includes a particular model of furnace, the certification report shall include the product class (as denoted in § 430.32), manufacturer's name, private labeler's name (if applicable) and manufacturer's model number of the furnace.

* * * * *

[FR Doc. 06–6320 Filed 7–19–06; 8:45 am]

BILLING CODE 6450–01–P

Reader Aids

Federal Register

Vol. 71, No. 139

Thursday, July 20, 2006

CUSTOMER SERVICE AND INFORMATION

Federal Register/Code of Federal Regulations	
General Information, indexes and other finding aids	**202–741–6000**
Laws	**741–6000**
Presidential Documents	
Executive orders and proclamations	**741–6000**
The United States Government Manual	**741–6000**
Other Services	
Electronic and on-line services (voice)	**741–6020**
Privacy Act Compilation	**741–6064**
Public Laws Update Service (numbers, dates, etc.)	**741–6043**
TTY for the deaf-and-hard-of-hearing	**741–6086**

ELECTRONIC RESEARCH

World Wide Web

Full text of the daily Federal Register, CFR and other publications is located at: **http://www.gpoaccess.gov/nara/index.html**

Federal Register information and research tools, including Public Inspection List, indexes, and links to GPO Access are located at: **http://www.archives. gov/federal__register/**

E-mail

FEDREGTOC-L (Federal Register Table of Contents LISTSERV) is an open e-mail service that provides subscribers with a digital form of the Federal Register Table of Contents. The digital form of the Federal Register Table of Contents includes HTML and PDF links to the full text of each document.

To join or leave, go to **http://listserv.access.gpo.gov** and select *Online mailing list archives, FEDREGTOC-L, Join or leave the list (or change settings);* then follow the instructions.

PENS (Public Law Electronic Notification Service) is an e-mail service that notifies subscribers of recently enacted laws.

To subscribe, go to **http://listserv.gsa.gov/archives/publaws-l.html** and select *Join or leave the list (or change settings);* then follow the instructions.

FEDREGTOC-L and **PENS** are mailing lists only. We cannot respond to specific inquiries.

Reference questions. Send questions and comments about the Federal Register system to: **fedreg.info@nara.gov**

The Federal Register staff cannot interpret specific documentsor regulations.

FEDERAL REGISTER PAGES AND DATE, JULY

37807–38052 3
38053–38258 5
38259–38510 6
38511–38752 7
38753–38978 10
38979–39202 11
39203–39510 12
39511–40002 13
40003–40382 14
40383–40636 17
40637–40874 18
40875–41090 19
41091–41344 20

CFR PARTS AFFECTED DURING JULY

At the end of each month, the Office of the Federal Register publishes separately a List of CFR Sections Affected (LSA), which lists parts and sections affected by documents published since the revision date of each title.

3 CFR

Proclamations:
7758 (See 8033).....38255
8033.....38255
8034.....38509
8035.....40383
8036.....41091

Executive Orders:
13348 (See Notice of July 18, 2006) 41093
13381 (Amended by 13408) 37807
13408.....37807
13409.....38511

Administrative Orders:
Presidential Determinations:
No. 2006-17 of June 30, 2006 39511
Notices:
Notice of July 18, 2006 41093

5 CFR

534.....38753
724.....41095

Proposed Rules:
1630.....40034
1651.....40034
1653.....40034
1690.....40034

7 CFR

210.....39513
215.....39513
220.....39513
225.....39513
226.....39513
235.....39513
301.....40875, 40879
319.....40875
625.....38053
922.....40637
948.....40639
1402.....40641
1900.....38979

Proposed Rules:
52.....39017
205.....37854, 40624
319.....38302
457.....40194
916.....38115
917.....38115
925.....39019
944.....39019
1421.....37857

9 CFR

94.....38259

10 CFR

72.....39520
110.....40003
727.....40880

Proposed Rules:
20.....37862
32.....37862
430.....41320
431.....38799

11 CFR

104.....38513

12 CFR

201.....39520
915.....40643

Proposed Rules:
41.....40786
222.....40786
308.....40938
328.....40440
334.....40786
364.....40786
563.....37862
563b.....41179
571.....40786
575.....41179
615.....39235
717.....40786
1750.....39399

14 CFR

23 .....39203, 41099, 41101, 41104
25.....38513, 40648
39 .....37980, 38053, 38054, 38059, 38062, 38515, 38979, 39521, 40385, 40387, 40389, 40391, 40886, 40888, 41109, 41113, 41116, 41118, 41121
71 .....38516, 40394, 40651, 40652, 40653
91.....40003
97 .....38064, 39522, 39523
121.....38517, 40003
125.....40003
135.....40003

Proposed Rules:
23.....38539, 40443
25 .....38539, 38540, 38541, 38542, 39235
33.....40675, 41184
39 .....37868, 38304, 38311, 39020, 39023, 39025, 39237, 39242, 39244, 39593, 39595, 39597, 39600, 40940, 40942, 40945, 40948
71 .....39247, 40444, 40445, 40447, 40448
91.....38118, 38542
121 .....38540, 38541, 38542
125.....38542
129 .....38540, 38541, 38542

15 CFR

700 39526

Proposed Rules:

740 ....38313, 39603
742 ....38313, 39603
744 38313
748 ....38313, 39603
754 39603
764 38321
766 38321
772 39603

16 CFR

1031 38754

Proposed Rules:

311 38321
681 40786
1119 39248
1500 39249
1507 39249

17 CFR

1 37809
15 37809
16 37809
17 37809
18 37809
19 37809
21 37809
30 40395
37 37809
41 39534
240 39534

Proposed Rules:

38 38740
240 40866

18 CFR

284 38066

Proposed Rules:

35 39251
37 39251
366 39603
367 39603
368 39603
369 39603
375 39603
803 38692
804 38692
805 38692

19 CFR

Proposed Rules:

4 40035
122 40035

20 CFR

422 38066

21 CFR

73 41125
520 ....38071, 38072, 39203, 39543, 40010
522 ....39204, 39544, 39545, 39547
524 ....38073, 38261
526 39544
556 39545
558 39204

23 CFR

1350 40891

25 CFR

Proposed Rules:

171 40450

26 CFR

1 ....38074, 38261, 38262, 39548
301 ....38262, 38985

Proposed Rules:

1 ....38322, 38323, 39604, 40458
301 38323
602 38323

27 CFR

9 ....40397, 40400, 40401

Proposed Rules:

9 ....37870, 40458, 40465

28 CFR

58 38076

Proposed Rules:

511 38543

29 CFR

1910 38085
1915 38085
1926 ....38085, 41127
1928 41127
2700 40654
4022 40011
4044 40011
4281 39205

30 CFR

250 40904
251 40904
280 40904

Proposed Rules:

206 38545
210 38545
216 38545
218 38545
250 37874

31 CFR

103 39554
Ch. V 39708

Proposed Rules:

103 39606

32 CFR

43 38760
50 38760
54 40656
78 40656

Proposed Rules:

310 40282

33 CFR

1 39206
64 39206
72 39206
81 39206
89 39206
100 ....38517, 38520, 38522, 39206, 39561, 39563, 40012, 40914
101 39206
104 39206
117 ....38524, 38988, 38989, 38990, 39563, 40418, 40916
120 39206
135 39206
146 39206
148 39206
151 39206
153 39206
154 39206
155 39206
156 39206
157 39206
160 39206
164 39206
165 ....37822, 37824, 37825, 37827, 37829, 37831, 37833, 37835, 37837, 38087, 38089, 38526, 38528, 38530, 38532, 38534, 39206, 39565, 39567, 40918, 40920

Proposed Rules:

100 ....38561, 39609, 39611, 39613
117 39028

34 CFR

300 41084
668 37990
674 37990
675 37990
676 37990
682 37990
685 37990
690 37990
691 37990

36 CFR

Proposed Rules:

1193 38324
1194 38324
1195 38563

37 CFR

Proposed Rules:

1 38808

38 CFR

Proposed Rules:

3 39616

39 CFR

111 ....38537, 38966

40 CFR

51 40420
52 ....38770, 38773, 38776, 38990, 38993, 38995, 38997, 39001, 39570, 39572, 39574, 40014, 40023, 40922, 41162
60 ....38482, 39154
63 ....39579, 40316
70 ....38776, 38997
81 ....39001, 39574, 40023
82 41163
85 39154
89 39154
93 40420
94 39154
174 ....40427, 40431
180 39211
260 40354
261 40254
262 40254
264 40254
265 40254
266 40254
267 40254
268 40254
270 40254
271 40254
273 40254
279 40254
281 39213
1039 39154
1065 39154
1068 39154

Proposed Rules:

52 ....38824, 38831, 39030, 39251, 39259, 39618, 40048, 40951, 40952
63 40679
70 38831
81 ....39618, 40952
82 ....38325, 41192
122 37880
141 40828
180 ....38125, 40051
300 39032
412 37880
721 39035

42 CFR

413 38264
435 39214
436 39214
440 39214
441 39214
457 39214
483 39214

43 CFR

4100 39402

44 CFR

64 ....38780, 41172
67 40925
206 40025

Proposed Rules:

67 ....40955, 40978, 40980

45 CFR

Proposed Rules:

1356 40346

46 CFR

Proposed Rules:

401 39629

47 CFR

1 ....38091, 38781, 39592
15 39229
22 38091
24 38091
54 ....38266, 38781
64 ....38091, 38268
73 ....39231, 39232, 39233, 40927

Proposed Rules:

1 38564
2 38564
4 38564
6 38564
7 38564
9 38564
11 38564
13 38564
15 38564
17 38564
18 38564
20 38564
22 38564
24 38564
25 38564
27 38564
52 38564
53 38564
54 ....38564, 38832
63 38564
64 38564
68 38564

73 .....38564, 39278, 40981
74.....38564
76.....38564
78.....38564
79.....38564
90.....38564
95.....38564
97.....38564
101.....38564

48 CFR

Ch. 1.....38238, 38250
2.....38238
7.....38238
18.....38247
34.....38238
52.....38238
Ch. 2.....39004
208.....39004
212.....39005
216.....39006
219.....39008
225 .....39004, 39005, 39008
239.....39009, 39010
252 .....39004, 39005, 39008, 39010
253.....39004
652.....41177
904.....40880
952.....40880

Proposed Rules:

2.....40681
7.....40681
12.....40681
25.....40681
52.....40681

49 CFR

574.....39233

Proposed Rules:

571.....40057

50 CFR

17.....40657
91.....39011
216.....40928
223.....38270
226.....38277
300.....38297, 38298
622.....38797, 41177
648.....40027, 40436
660.....37839, 38111
679 .....38797, 39015, 40028, 40029, 40934, 40935, 40936, 41178
680 .....38112, 38298, 40030

Proposed Rules:

17 .....37881, 38593, 40588
300.....39642
648.....38352
679.....39046

REMINDERS

The items in this list were editorially compiled as an aid to Federal Register users. Inclusion or exclusion from this list has no legal significance.

RULES GOING INTO EFFECT JULY 20, 2006

COMMERCE DEPARTMENT
Economic Analysis Bureau
International services surveys:
BE-577; direct investment abroad; transactions of U.S. reporter with foreign affiliate; quarterly survey; published 6-20-06

DEFENSE DEPARTMENT
Civilian health and medical program of uniformed services (CHAMPUS):
National Institutes of Health-sponsored clinical trials; coverage methodology; published 6-20-06

HEALTH AND HUMAN SERVICES DEPARTMENT
Food and Drug Administration
Color additives:
Mica-based pearlescent pigments; published 7-20-06

HOMELAND SECURITY DEPARTMENT
Coast Guard
Ports and waterways safety; regulated navigation areas, safety zones, security zones, etc.:
Buffalo Outer Harbor, Buffalo, NY; published 7-19-06

LABOR DEPARTMENT
Occupational Safety and Health Administration
Construction and occupational safety and health standards:
Roll-over protective structures; corrections and technical amendments; published 7-20-06

PERSONNEL MANAGEMENT OFFICE
Prevailing rate systems; published 6-20-06

STATE DEPARTMENT
Acquisition regulations:
Miscellaneous amendments
Correction; published 7-20-06

COMMENTS DUE NEXT WEEK

AGRICULTURE DEPARTMENT
Agricultural Marketing Service
Raisins produced from grapes grown in—
California; comments due by 7-24-06; published 5-23-06 [FR 06-04747]
Spearmint oil produced in Far West; comments due by 7-25-06; published 5-26-06 [FR E6-08105]

AGRICULTURE DEPARTMENT
Animal and Plant Health Inspection Service
Plant-related quarantine, domestic:
Emerald ash borer; comments due by 7-24-06; published 5-24-06 [FR 06-04812]
Pine shoot beetle; comments due by 7-24-06; published 5-24-06 [FR 06-04810]
Plant-related quarantine, foreign:
Fruits and vegetables import regulations; revision; comments due by 7-26-06; published 4-27-06 [FR 06-03897]
Fruits and vegetables imported in passenger baggage; phytosanitary certificates; comments due by 7-24-06; published 5-24-06 [FR E6-07923]

COMMERCE DEPARTMENT
International Trade Administration
Antidumping and countervailing duties:
Emergency relief work supplies; importation procedures; comments due by 7-24-06; published 6-22-06 [FR 06-05612]

COMMERCE DEPARTMENT
National Oceanic and Atmospheric Administration
Fishery conservation and management:
Alaska; fisheries of Exclusive Economic Zone—
Gulf of Alaska groundfish; comments due by 7-24-06; published 6-7-06 [FR 06-05104]
Caribbean, Gulf, and South Atlantic fisheries—
Snapper-grouper; comments due by 7-24-06; published 6-9-06 [FR E6-09028]

ENERGY DEPARTMENT
Energy Efficiency and Renewable Energy Office
Energy conservation:
Commercial and industrial equipment, energy efficiency program—
Refrigerated bottled or canned beverage vending machines; meeting and framework document availability; comments due by 7-27-06; published 6-28-06 [FR 06-05838]
Renewable energy production incentives; comments due by 7-26-06; published 6-26-06 [FR E6-09998]
Weatherization Assistance Program for low-income persons; renewable energy technologies and systems; comments due by 7-24-06; published 6-22-06 [FR E6-09858]

ENVIRONMENTAL PROTECTION AGENCY
Air programs; State authority delegations:
Arizona, California, and Nevada; comments due by 7-28-06; published 6-28-06 [FR 06-05841]
Air quality implementation plans; approval and promulgation; various States:
Alabama; comments due by 7-24-06; published 6-22-06 [FR 06-05597]
Kansas; comments due by 7-26-06; published 6-26-06 [FR 06-05623]
Missouri; comments due by 7-26-06; published 6-26-06 [FR 06-05625]
Protection of human subjects:
Pesticides research involving intentional exposure—
Nursing women and nursing infants; additional protections; comments due by 7-24-06; published 6-23-06 [FR 06-05649]
Nursing women and nursing infants; additional protections; comments due by 7-24-06; published 6-23-06 [FR 06-05648]
Superfund program:
National oil and hazardous substances contingency plan priorities list; comments due by 7-24-06; published 6-22-06 [FR E6-09748]
Water pollution control:
National Pollutant Discharge Elimination System—
Water transfers; comments due by 7-24-06; published 6-7-06 [FR E6-08814]

HEALTH AND HUMAN SERVICES DEPARTMENT
Centers for Medicare & Medicaid Services
Medicare:
Ambulance services fee schedule; payment policies revisions; comments due by 7-25-06; published 5-26-06 [FR E6-07929]

HEALTH AND HUMAN SERVICES DEPARTMENT
Food and Drug Administration
Biological Products:
Blood vessels recovered with organs and intended for use in organ transplantation; comments due by 7-26-06; published 5-12-06 [FR 06-04369]
Biological products:
Blood vessels recovered with organs and intended for use in organ transplantation; comments due by 7-26-06; published 5-12-06 [FR 06-04370]

HEALTH AND HUMAN SERVICES DEPARTMENT
Acquisition regulations; comments due by 7-25-06; published 5-26-06 [FR 06-04763]

HEALTH AND HUMAN SERVICES DEPARTMENT
Health Resources and Services Administration
Biological Products:
Blood vessels recovered with organs and intended for use in organ transplantation; comments due by 7-26-06; published 5-12-06 [FR 06-04369]
Biological products:
Blood vessels recovered with organs and intended for use in organ transplantation; comments due by 7-26-06; published 5-12-06 [FR 06-04370]

HOMELAND SECURITY DEPARTMENT
Coast Guard
Drawbridge operations:
Iowa, et al.; comments due by 7-24-06; published 5-25-06 [FR 06-04877]
New York; comments due by 7-24-06; published 5-24-06 [FR E6-07861]

HOMELAND SECURITY DEPARTMENT
Federal Emergency Management Agency
National Flood Insurance Program:
Flood insurance claims; appeals process; comments due by 7-25-06; published 5-26-06 [FR E6-08180]

HOMELAND SECURITY DEPARTMENT
U.S. Citizenship and Immigration Services
Immigration:

Premium Processing Service—
Public notification procedures; changes; comments due by 7-24-06; published 5-23-06 [FR 06-04754]

HOUSING AND URBAN DEVELOPMENT DEPARTMENT

Mortgage and loan insurance programs:
Puerto Rico; presentation of condominium legal documents; FHA approval; comments due by 7-24-06; published 5-23-06 [FR 06-04746]

HOUSING AND URBAN DEVELOPMENT DEPARTMENT

Federal Housing Enterprise Oversight Office

Risk-based capital:
Test methodology and specifications; technical amendments; comments due by 7-26-06; published 6-26-06 [FR 06-05330]

INTERIOR DEPARTMENT

Fish and Wildlife Service

Endangered and threatened species:
Critical habitat designations—
Mountain yellow-legged frog; comments due by 7-24-06; published 7-3-06 [FR E6-10458]
Findings on petitions, etc.—
California brown pelican; 5-year review; comments due by 7-24-06; published 5-24-06 [FR E6-07715]

Endangered Species Convention:
Regulations revised; comments due by 7-28-06; published 4-19-06 [FR 06-03444]

JUSTICE DEPARTMENT

Drug Enforcement Administration

Schedules of controlled substances:
Schedule I controlled substances; positional isomer definition; comments due by 7-24-06; published 5-25-06 [FR E6-07979]

PERSONNEL MANAGEMENT OFFICE

Chief Human Capital Officers Act; implementation:
Civilian workforce strategic management; enhancement and improvement; comments due by 7-24-06; published 5-23-06 [FR E6-07784]

Pay administration:
Fair Labor Standards Act; revisions; comments due by 7-25-06; published 5-26-06 [FR 06-04886]

POSTAL SERVICE

Postage meters:
Manufacture and distribution; authorization—
Postage Evidencing Systems; revisions to requirements; comments due by 7-27-06; published 6-27-06 [FR 06-05675]

SMALL BUSINESS ADMINISTRATION

Business loans:
Premier Certified Lenders Program; loan loss reserve fund pilot programs; comments due by 7-25-06; published 5-26-06 [FR E6-08039]

STATE DEPARTMENT

Visas; immigrant documentation:
Intercountry adoption; Hague Convention adoption cases; consular officer procedures; comments due by 7-24-06; published 6-22-06 [FR E6-09596]

TRANSPORTATION DEPARTMENT

Individuals with disabilities:
Transportation accessibility standards; modifications; comments due by 7-28-06; published 5-1-06 [FR 06-04069]

TRANSPORTATION DEPARTMENT

Federal Aviation Administration

Airworthiness directives:
Airbus; comments due by 7-24-06; published 5-23-06 [FR 06-04712]
Boeing; comments due by 7-24-06; published 6-8-06 [FR E6-08901]
Bombardier; comments due by 7-27-06; published 6-27-06 [FR E6-10090]
McDonnell Douglas; comments due by 7-24-06; published 6-8-06 [FR E6-08899]
Pilatus Aircraft Ltd.; comments due by 7-24-06; published 6-22-06 [FR E6-09845]

Airworthiness standards:
Special conditions—
Cessna Aircraft Co. Model 510 airplane; comments due by 7-24-06; published 6-23-06 [FR 06-05636]
Cessna Aircraft Co. Model 510 airplane; correction; comments due by 7-24-06; published 7-17-06 [FR E6-11153]

TRANSPORTATION DEPARTMENT

Federal Highway Administration

Engineering and traffic operations:
Design-build contracting; comments due by 7-24-06; published 5-25-06 [FR E6-08002]

TRANSPORTATION DEPARTMENT

National Highway Traffic Safety Administration

Motor vehicle safety standards:
Child restraint systems—
Exposed webbing; minimum breaking strength; comments due by 7-24-06; published 6-7-06 [FR E6-08727]

TREASURY DEPARTMENT

Internal Revenue Service

Income taxes:
Life-nonlife consolidated returns; tacking rule requirements; cross-reference; comments due by 7-24-06; published 4-25-06 [FR 06-03883]
Separate limitations application to dividends from noncontrolled section 902 corporations; cross-reference; comments due by 7-24-06; published 4-25-06 [FR 06-03885]

LIST OF PUBLIC LAWS

This is a continuing list of public bills from the current session of Congress which have become Federal laws. It may be used in conjunction with "P L U S" (Public Laws Update Service) on 202–741–6043. This list is also available online at *http://www.archives.gov/federal-register/laws.html*.

The text of laws is not published in the **Federal Register** but may be ordered in "slip law" (individual pamphlet) form from the Superintendent of Documents, U.S. Government Printing Office, Washington, DC 20402 (phone, 202–512–1808). The text will also be made available on the Internet from GPO Access at *http://www.gpoaccess.gov/plaws/index.html*. Some laws may not yet be available.

H.R. 889/P.L. 109–241

Coast Guard and Maritime Transportation Act of 2006 (July 11, 2006; 120 Stat. 516)

Last List July 10, 2006

Public Laws Electronic Notification Service (PENS)

PENS is a free electronic mail notification service of newly enacted public laws. To subscribe, go to *http://listserv.gsa.gov/archives/publaws-l.html*

Note: This service is strictly for E-mail notification of new laws. The text of laws is not available through this service. **PENS** cannot respond to specific inquiries sent to this address.