Federal Register

12–29–05 Thursday
Vol. 70 No. 249 Dec. 29, 2005

Pages 76971–77296

The **FEDERAL REGISTER** (ISSN 0097–6326) is published daily, Monday through Friday, except official holidays, by the Office of the Federal Register, National Archives and Records Administration, Washington, DC 20408, under the Federal Register Act (44 U.S.C. Ch. 15) and the regulations of the Administrative Committee of the Federal Register (1 CFR Ch. I). The Superintendent of Documents, U.S. Government Printing Office, Washington, DC 20402 is the exclusive distributor of the official edition. Periodicals postage is paid at Washington, DC.

The **FEDERAL REGISTER** provides a uniform system for making available to the public regulations and legal notices issued by Federal agencies. These include Presidential proclamations and Executive Orders, Federal agency documents having general applicability and legal effect, documents required to be published by act of Congress, and other Federal agency documents of public interest.

Documents are on file for public inspection in the Office of the Federal Register the day before they are published, unless the issuing agency requests earlier filing. For a list of documents currently on file for public inspection, see *www.archives.gov.*

**The seal of the National Archives and Records Administration authenticates the Federal Register** as the official serial publication established under the Federal Register Act. Under 44 U.S.C. 1507, the contents of the **Federal Register** shall be judicially noticed.

The **Federal Register** is published in paper and on 24x microfiche. It is also available online at no charge as one of the databases on GPO Access, a service of the U.S. Government Printing Office.

The online edition of the **Federal Register** *www.gpoaccess.gov/nara,* available through GPO Access, is issued under the authority of the Administrative Committee of the Federal Register as the official legal equivalent of the paper and microfiche editions (44 U.S.C. 4101 and 1 CFR 5.10). It is updated by 6 a.m. each day the **Federal Register** is published and includes both text and graphics from Volume 59, Number 1 (January 2, 1994) forward.

For more information about GPO Access, contact the GPO Access User Support Team, call toll free 1-888-293-6498; DC area 202-512-1530; fax at 202-512-1262; or via e-mail at *gpoaccess@gpo.gov.* The Support Team is available between 7:00 a.m. and 9:00 p.m. Eastern Time, Monday–Friday, except official holidays.

The annual subscription price for the **Federal Register** paper edition is $749 plus postage, or $808, plus postage, for a combined **Federal Register, Federal Register** Index and List of CFR Sections Affected (LSA) subscription; the microfiche edition of the **Federal Register** including the **Federal Register** Index and LSA is $165, plus postage. Six month subscriptions are available for one-half the annual rate. The prevailing postal rates will be applied to orders according to the delivery method requested. The price of a single copy of the daily **Federal Register,** including postage, is based on the number of pages: $11 for an issue containing less than 200 pages; $22 for an issue containing 200 to 400 pages; and $33 for an issue containing more than 400 pages. Single issues of the microfiche edition may be purchased for $3 per copy, including postage. Remit check or money order, made payable to the Superintendent of Documents, or charge to your GPO Deposit Account, VISA, MasterCard, American Express, or Discover. Mail to: New Orders, Superintendent of Documents, P.O. Box 371954, Pittsburgh, PA 15250-7954; or call toll free 1-866-512-1800, DC area 202-512-1800; or go to the U.S. Government Online Bookstore site, see *bookstore.gpo.gov.*

There are no restrictions on the republication of material appearing in the **Federal Register.**

**How To Cite This Publication:** Use the volume number and the page number. Example: 70 FR 12345.

**Postmaster:** Send address changes to the Superintendent of Documents, Federal Register, U.S. Government Printing Office, Washington DC 20402, along with the entire mailing label from the last issue received.

## SUBSCRIPTIONS AND COPIES

**PUBLIC**

**Subscriptions:**

| | |
|---|---|
| Paper or fiche | **202–512–1800** |
| Assistance with public subscriptions | **202–512–1806** |

**General online information** **202–512–1530; 1–888–293–6498**

**Single copies/back copies:**

| | |
|---|---|
| Paper or fiche | **202–512–1800** |
| Assistance with public single copies | **1–866–512–1800 (Toll-Free)** |

**FEDERAL AGENCIES**

**Subscriptions:**

| | |
|---|---|
| Paper or fiche | **202–741–6005** |
| Assistance with Federal agency subscriptions | **202–741–6005** |

**FEDERAL REGISTER WORKSHOP**

**THE FEDERAL REGISTER: WHAT IT IS AND HOW TO USE IT**

FOR: Any person who uses the Federal Register and Code of Federal Regulations.

WHO: Sponsored by the Office of the Federal Register.

WHAT: Free public briefings (approximately 3 hours) to present:

1. The regulatory process, with a focus on the Federal Register system and the public's role in the development of regulations.

2. The relationship between the Federal Register and Code of Federal Regulations.

3. The important elements of typical Federal Register documents.

4. An introduction to the finding aids of the FR/CFR system.

WHY: To provide the public with access to information necessary to research Federal agency regulations which directly affect them. There will be no discussion of specific agency regulations.

WHEN: Wednesday, January 11, 2006
9:00 a.m.–Noon

WHERE: Office of the Federal Register
Conference Room, Suite 700
800 North Capitol Street, NW.
Washington, DC 20002

RESERVATIONS: (202) 741–6008

Printed on recycled paper.

# Contents

**Federal Register**

Vol. 70, No. 249

Thursday, December 29, 2005

**Agricultural Marketing Service**
RULES
Prunes (dried) produced in—
California, 76971–76973

**Agriculture Department**
*See* Agricultural Marketing Service
*See* Animal and Plant Health Inspection Service
*See* Foreign Agricultural Service
*See* Forest Service
*See* Natural Resources Conservation Service

**Animal and Plant Health Inspection Service**
PROPOSED RULES
Plant-related quarantine, foreign:
Peppers from Korea, 77069–77073

**Antitrust Modernization Commission**
NOTICES
Hearings, 77121

**Arts and Humanities, National Foundation**
*See* National Foundation on the Arts and the Humanities

**Centers for Medicare & Medicaid Services**
NOTICES
Organization, functions, and authority delegations:
Office of External Affairs et al., 77159–77168

**Coast Guard**
NOTICES
Agency information collection activities; proposals, submissions, and approvals, 77169–77170

**Commerce Department**
*See* International Trade Administration
*See* National Oceanic and Atmospheric Administration
*See* Patent and Trademark Office

**Comptroller of the Currency**
NOTICES
Reports and guidance documents; availability, etc.:
Nontraditional mortgage products; interagency guidance, 77249–77257

**Defense Department**
*See* Navy Department
NOTICES
Arms sales notification; transmittal letter, etc., 77147–77150
Meetings:
Military Compensation Advisory Committee, 77150–77151
Science Board task forces, 77151
Women in Services Advisory Committee, 77151
Privacy Act; systems of records, 77152–77153

**Drug Enforcement Administration**
NOTICES
Registration revocations, restrictions, denials, reinstatements:
Boehringer Ingelheim Chemical Inc., 77189

**Education Department**
NOTICES
Grants and cooperative agreements; availability, etc.:
Special education and rehabilitative services—
Vocational Rehabilitation Services Projects for American Indians with Disabilities Program; correction, 77260

**Employment Standards Administration**
NOTICES
Agency information collection activities; proposals, submissions, and approvals, 77190

**Energy Department**
*See* Federal Energy Regulatory Commission

**Environmental Protection Agency**
RULES
Air programs:
Stratospheric ozone protection—
Class I ozone-depleting substances; allowance adjustments for export to Article 5 countries, 77042–77048
Essential Class I ozone depleting substances; extension of global laboratory and analytical use exemption, 77048–77052
Air quality implementation plans; approval and promulgation; various States; air quality planning purposes; designation of areas:
Indiana, 77026–77042
PROPOSED RULES
Air pollutants, hazardous; national emission standards:
Organic liquids distribution (non-gasoline), 77116–77117
Air programs:
Fine particulate matter and ozone; interstate transport control measures
Supplemental reconsideration notice, 77101–77113
Air quality implementation plans; approval and promulgation; various States:
Michigan, 77113–77116
NOTICES
Agency information collection activities; proposals, submissions, and approvals, 77154–77155
Reports and guidance documents; availability, etc.:
Ozone; review of national ambient air quality standards; policy assessment of scientific and technical information, 77155–77156

**Executive Office of the President**
*See* Trade Representative, Office of United States

**Federal Aviation Administration**
RULES
Air carrier certification and operations:
Service difficulty reports; withdrawn, 76974–76979
Airworthiness directives:
Airbus; correction, 76973–76974
PROPOSED RULES
Airworthiness directives:
Honeywell International Inc., 77073–77075
Pratt & Whitney, 77075–77077

Commercial space transportation:
Crew and space flight participants; human space flight requirements, 77262–77290

**Federal Communications Commission**
**RULES**
Common carrier services:
Individuals with hearing and speech disabilities; telecommunications relay services and speech-to-speech services, 77052–77054
Wireless telecommunications services—
71-76 GHz, 81-86 GHz, and 92-95 GHz bands allocations and service rules; effective date, 77054
**NOTICES**
Agency information collection activities; proposals, submissions, and approvals, 77156
Meetings:
North American Numbering Council, 77156–77157

**Federal Deposit Insurance Corporation**
**NOTICES**
Agency information collection activities; proposals, submissions, and approvals, 77157
Reports and guidance documents; availability, etc.:
Nontraditional mortgage products; interagency guidance, 77249–77257

**Federal Energy Regulatory Commission**
**PROPOSED RULES**
Natural gas companies (Natural Gas Act):
Energy Policy Act of 2005; implementation—
Underground storage facilities; rate regulation, 77079–77089

**Federal Maritime Commission**
**NOTICES**
Agreements filed, etc., 77157–77158
Ocean transportation intermediary licenses:
Attila Cargo Express, Inc., et al., 77158
Major Forwarding Co., Inc., et al., 77158
P.O.L. International Inc., et al., 77158–77159

**Federal Reserve System**
**NOTICES**
Reports and guidance documents; availability, etc.:
Nontraditional mortgage products; interagency guidance, 77249–77257

**Federal Trade Commission**
**PROPOSED RULES**
Rules and guides; regulatory review, 77077–77078

**Financial Management Service**
*See* Fiscal Service

**Fiscal Service**
**NOTICES**
Agency information collection activities; proposals, submissions, and approvals, 77257–77258
Surety and reinsuring companies:
Application and renewal fees, 77258

**Fish and Wildlife Service**
**NOTICES**
Environmental statements; notice of intent:
Grand Bay National Wildlife Refuge, MS and AL; conservation plan, 77176–77177
Meetings:
American ginseng; harvest and export, 77177–77178

**Food and Drug Administration**
**NOTICES**
Grants and cooperative agreements; availability, etc.:
Regulatory Project Managers Training Program, 77168–77169

**Foreign Agricultural Service**
**NOTICES**
Adjustment assistance; applications, determinations, etc.:
Florida avocado producers, 77118

**Forest Service**
**NOTICES**
Environmental statements; availability, etc.:
Smoky Canyon Mine, ID; expansion project, 77181–77182
Environmental statements; notice of intent:
Caribou-Targhee National Forest, ID, 77118–77120
Meetings:
Eastern Washington Cascades Provincial and Yakima Provincial Advisory Committees; combined meeting, 77120
Resource Advisory Committees—
Fremont and Winema, 77120

**General Services Administration**
**NOTICES**
Agency information collection activities; proposals, submissions, and approvals, 77159

**Health and Human Services Department**
*See* Centers for Medicare & Medicaid Services
*See* Food and Drug Administration

**Homeland Security Department**
*See* Coast Guard
*See* U.S. Citizenship and Immigration Services

**Housing and Urban Development Department**
**RULES**
Practice and procedure:
Applications for grants and other financial assistance; electronic submission, 77292–77294
**NOTICES**
Agency information collection activities; proposals, submissions, and approvals, 77174–77176

**Indian Affairs Bureau**
**NOTICES**
Energy rights-of-way on tribal lands; congressionally mandated study, 77178–77179

**Interior Department**
*See* Fish and Wildlife Service
*See* Indian Affairs Bureau
*See* Land Management Bureau
*See* National Park Service

**Internal Revenue Service**
**NOTICES**
Agency information collection activities; proposals, submissions, and approvals, 77258–77259

**International Trade Administration**
**NOTICES**
Antidumping:
Diamond sawblades and parts from—
China, 77121–77135
Korea, 77135–77144

Meetings:
United States Travel and Tourism Promotion Advisory Board, 77145–77146
*Applications, hearings, determinations, etc.:*
University of—
Texas, Medical Branch at Galveston, et al., 77145
Vermont et al., 77144–77145

**Justice Department**
*See* Drug Enforcement Administration
**NOTICES**
Pollution control; consent judgments:
Cambridge-Lee Industries, LLC, et al., 77188–77189
Detroit Diesel Corp., 77189

**Labor Department**
*See* Employment Standards Administration
*See* Labor Statistics Bureau
*See* Occupational Safety and Health Administration
**NOTICES**
Secretary's orders; cancellations, etc, 77296

**Labor Statistics Bureau**
**NOTICES**
Committees; establishment, renewal, termination, etc.:
Labor Research Advisory Council, 77190–77191

**Land Management Bureau**
**NOTICES**
Alaska Native claims selection:
Ahtna, Inc., et al., 77179–77180
Shumagin Corp., 77180
Committees; establishment, renewal, termination, etc.:
California Desert District Advisory Council, 77180–77181
Environmental statements; availability, etc.:
Smoky Canyon Mine, ID; expansion project, 77181–77182
Meetings:
Pinedale Anticline Working Group, 77182–77183
Realty actions; sales, leases, etc.:
Arizona, 77183–77184
Nevada, 77184–77186
Recreation management restrictions, etc.:
Knolls Special Recreation Management Area, UT; supplementary rules, 77186–77188
Survey plat filings:
Wyoming, 77188

**Maritime Administration**
**NOTICES**
Agency information collection activities; proposals, submissions, and approvals, 77241
Coastwise trade laws; administrative waivers:
CAT'S MEOW, 77242
GRIN N BARRETT, 77242
HOPSCOTCH, 77242–77243
LANDFALL, 77243
ULTRA VIOLET, 77243–77244

**National Archives and Records Administration**
**NOTICES**
Agency records schedules; availability, 77191–77192

**National Credit Union Administration**
**NOTICES**
Reports and guidance documents; availability, etc.:
Nontraditional mortgage products; interagency guidance, 77249–77257

**National Foundation on the Arts and the Humanities**
**NOTICES**
Committees; establishment, renewal, termination, etc.:
Humanities Panel, 77192–77193

**National Highway Traffic Safety Administration**
**NOTICES**
Motor vehicle defect proceedings; petitions, etc.:
Ruh, Chris, et al.; petition denied, 77244–77245
Motor vehicle safety standards; exemption petitions, etc.:
G&K Automotive Conversion, Inc., 77245–77246
Gifford Bobcat Sales, 77246–77247

**National Oceanic and Atmospheric Administration**
**RULES**
Endangered and threatened species:
Sea turtle conservation—
Shrimp trawling; use limited tow times alternative to Turtle Excluder Devices in Federal waters from Florida/Alabama border, 77054–77057
Fishery conservation and management:
Alaska; fisheries of Exclusive Economic Zone—
Bering Sea and Aleutian Islands groundfish, 77067–77068
Caribbean, Gulf, and South Atlantic fisheries—
Grouper, 77057–77060
Northeastern United States fisheries—
Summer flounder, scup and black sea bass, 77060–77067

**National Park Service**
**PROPOSED RULES**
Special regulations:
Cape Lookout National Seashore, NC; personal watercraft use, 77089–77101

**National Science Foundation**
**NOTICES**
Agency information collection activities; proposals, submissions, and approvals, 77193–77194

**Natural Resources Conservation Service**
**NOTICES**
Environmental statements; availability, etc.:
Floating Marsh Creation Demonstration Project, LA, 77120–77121

**Navy Department**
**NOTICES**
Privacy Act; systems of records, 77153–77154

**Nuclear Regulatory Commission**
**NOTICES**
Meetings:
Nuclear Waste Advisory Committee, 77197–77198
Reactor Safeguards Advisory Committee, 77198
*Applications, hearings, determinations, etc.:*
Energy Department et al., 77194–77195
Nuclear Management Co., LLC, 77195
Westinghouse Electric Co., 77195–77197

**Occupational Safety and Health Administration**
**RULES**
Construction and occupational safety and health standards:
Roll-over protective structures, 76979–77025

**Office of United States Trade Representative**
*See* Trade Representative, Office of United States

**Patent and Trademark Office**
NOTICES
Agency information collection activities; proposals, submissions, and approvals, 77146–77147

**Pension Benefit Guaranty Corporation**
NOTICES
Agency information collection activities; proposals, submissions, and approvals, 77198–77199

**Pipeline and Hazardous Materials Safety Administration**
NOTICES
Agency information collection activities; proposals, submissions, and approvals, 77247–77248

**Public Debt Bureau**
*See* Fiscal Service

**Securities and Exchange Commission**
NOTICES
Agency information collection activities; proposals, submissions, and approvals, 77199–77201
Self-regulatory organizations; proposed rule changes:
American Stock Exchange LLC, 77204–77207
Boston Stock Exchange, Inc., 77207–77209
Chicago Board Options Exchange, Inc., 77209–77214
International Securities Exchange, Inc., 77214–77215
National Association of Securities Dealers, Inc., 77215–77228
New York Stock Exchange, Inc., 77228–77232
Pacific Exchange, Inc., 77232–77233
Philadelphia Stock Exchange, Inc., 77234–77235
*Applications, hearings, determinations, etc.:*
Amerindo Funds, Inc. et al., 77201–77203
Charles Schwab Corp., 77203
Pioneer Kabushiki Kaisha, 77203–77204
Provident Energy Trust, 77204

**Small Business Administration**
NOTICES
Agency information collection activities; proposals, submissions, and approvals, 77236
Disaster loan areas:
Alaska, 77236
Connecticut, 77236–77237
Interest rates; quarterly determinations, 77237

**Surface Transportation Board**
NOTICES
Railroad operation, acquisition, construction, etc.:
Mohall Central Railroad, Inc., 77248–77249
Reading Blue Mountain & Northern Railroad Co., 77248

**Thrift Supervision Office**
NOTICES
Reports and guidance documents; availability, etc.:
Nontraditional mortgage products; interagency guidance, 77249–77257

**Trade Representative, Office of United States**
NOTICES
Generalized System of Preferences:
Competitive need limitations; import statistics, 77239–77240
Liberia; least developed beneficiary developing country designation, 77237–77239

**Transportation Department**
*See* Federal Aviation Administration
*See* Maritime Administration
*See* National Highway Traffic Safety Administration
*See* Pipeline and Hazardous Materials Safety Administration
*See* Surface Transportation Board

**Treasury Department**
*See* Comptroller of the Currency
*See* Fiscal Service
*See* Internal Revenue Service
*See* Thrift Supervision Office

**U.S. Citizenship and Immigration Services**
NOTICES
Agency information collection activities; proposals, submissions, and approvals, 77170–77174

---

**Separate Parts In This Issue**

**Part II**
Transportation Department, Federal Aviation Administration, 77262–77290

**Part III**
Housing and Urban Development Department, 77292–77294

**Part IV**
Labor Department, 77296

---

**Reader Aids**

Consult the Reader Aids section at the end of this issue for phone numbers, online resources, finding aids, reminders, and notice of recently enacted public laws.

To subscribe to the Federal Register Table of Contents LISTSERV electronic mailing list, go to http://listserv.access.gpo.gov and select Online mailing list archives, FEDREGTOC-L, Join or leave the list (or change settings); then follow the instructions.

## CFR PARTS AFFECTED IN THIS ISSUE

A cumulative list of the parts affected this month can be found in the Reader Aids section at the end of this issue.


**7 CFR**
993 ..... 76971
**Proposed Rules:**
319 ..... 77069

**14 CFR**
39 ..... 76973
121 ..... 76974
125 ..... 76974
135 ..... 76974
145 ..... 76974
**Proposed Rules:**
39 (2 documents) ..... 77073, 77075
401 ..... 77262
415 ..... 77262
431 ..... 77262
435 ..... 77262
440 ..... 77262
450 ..... 77262
460 ..... 77262

**16 CFR**
**Proposed Rules:**
Ch. 1 ..... 77077

**18 CFR**
**Proposed Rules:**
284 ..... 77079

**24 CFR**
5 ..... 77292

**29 CFR**
1926 ..... 76979
1928 ..... 76979

**36 CFR**
**Proposed Rules:**
7 ..... 77089

**40 CFR**
52 ..... 77026
81 ..... 77026
82 (2 documents) ..... 77042, 77048
**Proposed Rules:**
51 ..... 77101
52 ..... 77113
63 ..... 77116
96 ..... 77101

**47 CFR**
64 ..... 77052
101 ..... 77054

**50 CFR**
222 ..... 77054
223 ..... 77054
622 ..... 77057
648 ..... 77060
679 ..... 77067

# Rules and Regulations

Federal Register
Vol. 70, No. 249
Thursday, December 29, 2005

This section of the FEDERAL REGISTER contains regulatory documents having general applicability and legal effect, most of which are keyed to and codified in the Code of Federal Regulations, which is published under 50 titles pursuant to 44 U.S.C. 1510.

The Code of Federal Regulations is sold by the Superintendent of Documents. Prices of new books are listed in the first FEDERAL REGISTER issue of each week.

## DEPARTMENT OF AGRICULTURE

### Agricultural Marketing Service

### 7 CFR Part 993

**[Docket No. FV05–993–5 FIR]**

## Dried Prunes Produced in California; Decreased Assessment Rate

**AGENCY:** Agricultural Marketing Service, USDA.

**ACTION:** Final rule.

**SUMMARY:** The Department of Agriculture (USDA) is adopting, as a final rule, without change, an interim final rule which decreased the assessment rate established for the Prune Marketing Committee (committee) under Marketing Order No. 993 for the 2005–06 and subsequent crop years from $6.00 to $0.65 per ton of salable dried prunes. The committee locally administers the marketing order which regulates the handling of dried prunes grown in California. Authorization to assess dried prune handlers enables the committee to incur expenses that are reasonable and necessary to administer the program. The crop year began August 1 and ends July 31. The assessment rate will remain in effect indefinitely unless modified, suspended, or terminated.

**EFFECTIVE DATE:** January 30, 2006.

**FOR FURTHER INFORMATION CONTACT:** Toni Sasselli, Program Analyst, or Terry Vawter, Marketing Specialist, California Marketing Field Office, Fruit and Vegetable Programs, AMS, USDA; Telephone: (559) 487–5901, Fax (559) 487–5906; or George Kelhart, Technical Advisor, Marketing Order Administration Branch, Fruit and Vegetable Programs, AMS, USDA, 1400 Independence Avenue SW., STOP 0237, Washington, DC 20250–0237; Telephone: (202) 720–2491, Fax: (202) 720–8938.

Small businesses may request information on complying with this regulation by contacting Jay Guerber, Marketing Order Administration Branch, Fruit and Vegetable Programs, AMS, USDA, 1400 Independence Avenue SW., STOP 0237, Washington, DC 20250–0237; Telephone: (202) 720–2491, Fax: (202) 720–8938, or E-mail: *Jay.Guerber@usda.gov.*

**SUPPLEMENTARY INFORMATION:** This rule is issued under Marketing Agreement No. 110 and Marketing Order No. 993, both as amended (7 CFR part 993), regulating the handling of dried prunes grown in California, hereinafter referred to as the ''order.'' The marketing agreement and order are effective under the Agricultural Marketing Agreement Act of 1937, as amended (7 U.S.C. 601–674), hereinafter referred to as the ''Act.''

The Department of Agriculture (USDA) is issuing this rule in conformance with Executive Order 12866.

This rule has been reviewed under Executive Order 12988, Civil Justice Reform. Under the marketing order now in effect, California dried prune handlers are subject to assessments. Funds to administer the order are derived from such assessments. It is intended that the assessment rate as issued herein will be applicable to all assessable dried prunes beginning August 1, 2005, and continue until amended, suspended, or terminated. This rule will not preempt any State or local laws, regulations, or policies, unless they present an irreconcilable conflict with this rule.

The Act provides that administrative proceedings must be exhausted before parties may file suit in court. Under section 608c(15)(A) of the Act, any handler subject to an order may file with USDA a petition stating that the order, any provision of the order, or any obligation imposed in connection with the order is not in accordance with law and request a modification of the order or to be exempted therefrom. Such handler is afforded the opportunity for a hearing on the petition. After the hearing USDA would rule on the petition. The Act provides that the district court of the United States in any district in which the handler is an inhabitant, or has his or her principal place of business, has jurisdiction to review USDA's ruling on the petition, provided an action is filed not later than 20 days after the date of the entry of the ruling.

This rule continues in effect the action that decreased the assessment rate established for the committee for the 2005–06 and subsequent crop years from $6.00 to $0.65 per ton of salable dried prunes handled.

The California dried prune marketing order provides authority for the committee, with the approval of USDA, to formulate an annual budget of expenses and collect assessments from handlers to administer the program. The members of the committee are producers and handlers of California dried prunes. They are familiar with the committee's needs and with the costs for goods and services in their local area; and are, thus, in a position to formulate an appropriate budget and assessment rate. The assessment rate is formulated and discussed in at least one public meeting. Thus, all directly affected persons have an opportunity to participate and provide input.

For the 2004–05 and subsequent crop years the committee recommended, and USDA approved, an assessment rate that would continue in effect from crop year to crop year unless modified, suspended, or terminate by USDA upon recommendation and information submitted by the committee or other information available to USDA.

The committee met on June 30, 2005, and unanimously recommended a decreased assessment rate of $0.65 per ton of salable dried prunes and a decreased level of expenses for the 2005–06 crop year. The committee recommended a total budget of $89,090. The assessment rate of $0.65 per ton of salable dried prunes is $5.35 lower than the rate in effect prior to implementation of the interim final rule.

The committee recommended a lower assessment rate based on an estimated production of 104,500 tons of salable dried prunes. The committee's expenses are being reduced significantly from the 2004–05 budget as the result of the August 1, 2005, suspension of the reporting and handling requirements under the order. The assessment rate of $0.65 per ton of salable dried prunes plus excess funds from the 2004–2005 crop year are expected to provide sufficient funds for the committee's reduced activities.

In comparison, the actual expenditures for the 2004–05 crop year

were $284,000 and the assessment rate was $6.00 per ton of salable prunes, based upon 47,203 salable tons.

The following table compares the major budget expenditures recommended by the committee on June 30, 2005, and major budget expenditures in the 2004–05 budget.

| Budget expense categories | 2004–05 | 2005–06 |
|---|---|---|
| Total Personnel Salaries | $208,335 | $45,945 |
| Total Operating Expenses | 54,500 | 16,755 |
| Reserve for Contingencies | 21,165 | 26,390 |

The assessment rate recommended by the committee was derived by dividing anticipated expenses by the estimated salable tons of California dried prunes. Production of dried prunes for the year is estimated to be 104,500 salable tons, which should provide $67,925 in assessment income. Income derived from handler assessments plus excess funds from the 2004–2005 crop year should be adequate to cover budgeted expenses. The committee is authorized to use excess assessment funds from the 2004–05 crop year (currently estimated at $13,000) for up to 5 months beyond the end of the crop year to meet 2005–06 crop year expenses. At the end of the 5 months, the committee either refunds or credits excess funds to handlers (§ 993.81(c)).

The assessment rate will continue in effect indefinitely unless modified, suspended, or terminated by USDA upon recommendation and information submitted by the committee or other available information.

Although this assessment rate is effective for an indefinite period, the committee will continue to meet prior to or during each crop year to recommend a budget of expenses and consider recommendations for modification of the assessment rate. The dates and times of committee meetings are available from the committee or USDA. Committee meetings are open to the public and interested persons may express their views at these meetings. USDA will evaluate committee recommendations and other available information to determine whether modification of the assessment rate is needed. Further rulemaking would be undertaken as necessary. The committee's 2005–06 budget and those for subsequent crop years will be reviewed and, as appropriate, approved by USDA.

**Final Regulatory Flexibility Analysis**

Pursuant to requirements set forth in the Regulatory Flexibility Act (RFA), the Agricultural Marketing Service (AMS) has considered the economic impact of this rule on small entities. Accordingly, AMS has prepared this final regulatory flexibility analysis.

The purpose of the RFA is to fit regulatory actions to the scale of business subject to such actions in order that small businesses will not be unduly or disproportionately burdened. Marketing orders issued pursuant to the Act, and the rules issued thereunder, are unique in that they are brought about through group action of essentially small entities acting on their own behalf. Thus, both statutes have small entity orientation and compatibility.

There are approximately 1,100 producers of dried prunes in the production area and approximately 22 handlers subject to regulation under the marketing order. The Small Business Administration (13 CFR 121.201) defines small agricultural producers as those whose annual receipts are less than $750,000, and small agricultural service firms as those whose annual receipts are less than $6,000,000.

Eight of the 22 handlers (36.4 percent) shipped over $6,000,000 of dried prunes and could be considered large handlers by the Small Business Administration. Fourteen of the 22 handlers (63.6 percent) shipped under $6,000,000 of dried prunes and could be considered small handlers. An estimated 32 producers, or less than 3 percent of the 1,100 total producers, would be considered large producers with annual incomes over $750,000. The majority of handlers and producers of California dried prunes may be classified as small entities.

The producer price for the 2005–06 crop year is expected to average between $1,500 and $1,600 per ton of salable dried prunes. Based on an estimated 104,500 salable tons of dried prunes, assessment revenue as a percentage of producer prices during the 2005–06 crop year is expected to be between .041 and .043 percent.

This rule continues in effect the action that decreased the assessment rate established for the committee and collected from handlers for the 2005–06 and subsequent crop years from $6.00 to $0.65 per ton of salable dried prunes. The committee unanimously recommended a 2005–06 total budget of $89,090 and a decreased assessment rate of $0.65 per ton of salable dried prunes at the meeting on June 30, 2005. The recommended budget of $89,090 is significantly reduced for the 2005–06 crop year as compared to previous crop years. The assessment rate of $0.65 per ton of salable dried prunes is $5.35 lower than the previous rate. The quantity of salable dried prunes for the 2005–06 crop year is now estimated at 104,500 salable tons.

The following table compares the major budget expenditures recommended by the committee on June 30, 2005, and major budget expenditures in the 2004–05 budget.

| Budget expense categories | 2004–05 | 2005–06 |
|---|---|---|
| Total Personnel Salaries | $208,335 | $45,945 |
| Total Operating Expenses | 54,500 | 16,755 |
| Reserve for Contingencies | 21,165 | 26,390 |

Prior to arriving at its budget of $89,090, the committee considered information from various sources, such as the committee's Executive Subcommittee. An alternative to this action would be to continue with the $6.00 per ton assessment rate. However, an assessment rate of $0.65 per ton of salable dried prunes and excess funds from the 2004–2005 crop year will provide enough income is to fund the committee's reduced activities after the August 1, 2005, suspension of the handling and reporting requirements.

Therefore, the Executive Subcommittee and committee agreed that $0.65 per ton of salable dried prunes is an acceptable assessment rate. The committee is authorized to use excess assessment funds from the 2004–05 crop year (currently estimated at $13,000) for up to 5 months beyond the end of the crop year to meet 2003–04 crop year expenses. At the end of the 5 months, the committee either refunds or credits excess funds to handlers (§ 993.81(c)).

This action continues in effect the action that decreased the assessment obligation imposed on handlers. Assessments are applied uniformly on all handlers, and some of the costs may be passed on to producers. However, decreasing the assessment rate reduces the burden on handlers, and may reduce the burden on producers. In addition, the committee's meeting was widely publicized throughout the California dried prune industry and all interested persons were invited to attend the meeting and participate in committee deliberations on all issues. Like all committee meetings, the June 30, 2005, meeting was a public meeting and all entities, both large and small, were encouraged to express views on this issue.

This action imposes no additional reporting or recordkeeping requirements on either small or large California dried prune handlers. As with all Federal marketing order programs, reports and forms are periodically reviewed to reduce information requirements and duplication by industry and public sector agencies.

USDA has not identified any relevant Federal rules that duplicate, overlap, or conflict with this rule.

An interim final rule concerning this action was published in the **Federal Register** on September 15, 2005. The committee staff mailed copies of the rule to all committee members, alternates, and prune handlers. In addition, the rule was made available through the Internet by the Office of the Federal Register and USDA. That rule provided for a 60-day comment period which ended November 14, 2005. Three comments were received. Two comments were not relevant to the rulemaking action, and one comment supported the reduced assessment rate for prunes.

A small business guide on complying with fruit, vegetable, and specialty crop marketing agreements and orders may be viewed at: *http://www.ams.usda.gov/fv/moab/html.* Any questions about the compliance guide should be sent to Jay Guerber at the previously mentioned address in the **FOR FURTHER INFORMATION CONTACT** section.

After consideration of all relevant material presented, including the information and recommendation submitted by the committee and other available information, it is hereby found that this rule, as hereinafter set forth, will tend to effectuate the declared policy of the Act.

### List of Subjects in 7 CFR Part 993

Marketing agreements, Plums, Prunes, Reporting and recordkeeping requirements.

■ For the reasons set forth in the preamble, 7 CFR part 993 is amended as follows:

## PART 993—DRIED PRUNES PRODUCED IN CALIFORNIA

■ Accordingly, the interim final rule amending 7 CFR part 993 which was published at 70 FR 54469 on September 15, 2005, is adopted as a final rule without change.

Dated: December 22, 2005.

**Lloyd C. Day,**

*Administrator, Agricultural Marketing Service.*

[FR Doc. 05–24544 Filed 12–28–05; 8:45 am]

BILLING CODE 3410–02–P

---

## DEPARTMENT OF TRANSPORTATION

## Federal Aviation Administration

## 14 CFR Part 39

**[Docket No. 2002–NM–298–AD; Amendment 39–14354; AD 2005–22–10 R1]**

**RIN 2120–AA64**

## Airworthiness Directives; Airbus Model A320–111 Airplanes, and Model A320–200 Series Airplanes

**AGENCY:** Federal Aviation Administration, DOT.

**ACTION:** Final rule; correction.

**SUMMARY:** This document corrects information in an existing airworthiness directive (AD) that applies to certain Airbus Model A320–111 airplanes, and Model A320–200 series airplanes. That AD currently requires a detailed inspection of the tail cone triangle to determine its position, and corrective actions if necessary. This document corrects the applicability by specifying that the AD affects only airplanes identified in Airbus Service Bulletin A320–27–1132, Revision 01, dated June 19, 2002. This correction is necessary to ensure that only affected airplanes are subject to the requirements of the AD.

**DATES:** Effective December 5, 2005.

The incorporation by reference of a certain publication listed in the regulations was approved previously by the Director of the Federal Register as of December 5, 2005 (70 FR 62232, October 31, 2005).

**FOR FURTHER INFORMATION CONTACT:** Tim Dulin, Aerospace Engineer, International Branch, ANM–116, FAA, Transport Airplane Directorate, 1601 Lind Avenue, SW., Renton, Washington 98055–4056; telephone (425) 227–2141; fax (425) 227–1149.

**SUPPLEMENTARY INFORMATION:** On October 20, 2005, the Federal Aviation Administration (FAA) issued AD 2005–22–10, amendment 39–14354 (70 FR 62232, October 31, 2005), which applies to certain Airbus Model A320–111 airplanes, and Model A320–200 series airplanes. That AD requires a detailed inspection of the tail cone triangle to determine its position, and corrective actions if necessary. That AD was prompted by a report that the tail cone triangles were not installed properly on certain airplanes during production, resulting in possible mis-rigged elevator servo-controls. The actions required by that AD are intended to prevent excessive vibrations of the elevators, which could result in reduced structural integrity and reduced controllability of the airplane.

### Need for the Correction

Information obtained recently by the FAA indicates that we inadvertently changed the applicability from that specified in the Notice of Proposed Rulemaking by omitting from the statement of applicability of AD 2005–22–10 that airplanes affected by the AD are those identified in Airbus Service Bulletin A320–27–1132, Revision 01, dated June 19, 2002.

The FAA has determined that a correction to AD 2005–22–10 is necessary. The correction will revise the applicability to include a reference to Airbus Service Bulletin A320–27–1132, Revision 01, dated June 19, 2002.

### Correction of Publication

This document corrects the error and correctly adds the AD as an amendment to section 39.13 of the Federal Aviation Regulations (14 CFR 39.13).

The AD is reprinted in its entirety for the convenience of affected operators. The effective date of the AD remains December 5, 2005.

Since this action reduces the number of airplanes affected by revising the applicability, it has no adverse economic impact and imposes no additional burden on any person.

Therefore, the FAA has determined that notice and public procedures are unnecessary.

### List of Subjects in 14 CFR Part 39

Air transportation, Aircraft, Aviation safety, Incorporation by reference, Safety.

### Adoption of the Correction

■ Accordingly, pursuant to the authority delegated to me by the Administrator, the Federal Aviation Administration amends part 39 of the Federal Aviation Regulations (14 CFR part 39) as follows:

## PART 39—AIRWORTHINESS DIRECTIVES

■ 1. The authority citation for part 39 continues to read as follows:

**Authority:** 49 U.S.C. 106(g), 40113, 44701.

### § 39.13 [Corrected]

■ 2. Section 39.13 is amended by correctly adding the following airworthiness directive (AD):

**2005–22–10 R1 Airbus:** Amendment 39–14354. Docket 2002–NM–298–AD.

*Applicability:* Model A320–111, –211, –212, –214, –231, –232, and –233 airplanes, certificated in any category; as listed in Airbus Service Bulletin A320–27–1132, Revision 01, dated June 19, 2002.

*Compliance:* Required as indicated, unless accomplished previously.

To prevent excessive vibrations of the elevators, which could result in reduced structural integrity and reduced controllability of the airplane, accomplish the following:

**Detailed Inspection and Corrective Action**

(a) Within 800 flight hours after the effective date of this AD, perform a detailed inspection to determine the position of each tail cone triangle in accordance with the Accomplishment Instructions of Airbus Service Bulletin A320–27–1132, Revision 01, dated June 19, 2002. If the position of the tail cone triangle is not within the limits specified in the service bulletin: Within 3,500 flight hours after the inspection, re-rig the elevator servo controls to adjust the elevator neutral setting, and change the position of the tail cone triangle, in accordance with the service bulletin.

**Note 1:** For the purposes of this AD, a detailed inspection is defined as: ''An intensive visual examination of a specific structural area, system, installation, or assembly to detect damage, failure, or irregularity. Available lighting is normally supplemented with a direct source of good lighting at intensity deemed appropriate by the inspector. Inspection aids such as mirror, magnifying lenses, etc., may be used. Surface cleaning and elaborate access procedures may be required.''

**Actions Accomplished Per Previous Release of the Service Bulletin**

(b) Actions accomplished prior to the effective date of this AD in accordance with Airbus Service Bulletin A320–27–1132, dated March 14, 2001, are considered acceptable for compliance with the corresponding actions required by this AD.

**No Reporting Requirement**

(c) Although the service bulletin specifies to submit certain information to the manufacturer, this AD does not include such a requirement.

**Alternative Methods of Compliance**

(d)(1) In accordance with 14 CFR 39.19, the Manager, International Branch, ANM–116, Transport Airplane Directorate, FAA, is authorized to approve alternative methods of compliance for this AD.

(2) Before using any AMOC approved in accordance with § 39.19 on any airplane to which the AMOC applies, notify the appropriate principal inspector in the FAA Flight Standards Certificate Holding District Office.

**Incorporation by Reference**

(e) Unless otherwise specified in this AD, the actions must be done in accordance with Airbus Service Bulletin A320–27–1132, Revision 01, excluding Appendix 01, dated June 19, 2002. This incorporation by reference was approved previously by the Director of the Federal Register as of December 5, 2005 (70 FR 62232, October 31, 2005). To get copies of this service information, contact Airbus, 1 Rond Point Maurice Bellonte, 31707 Blagnac Cedex, France. To inspect copies of this service information, go to the FAA, Transport Airplane Directorate, 1601 Lind Avenue, SW., Renton, Washington; or to the National Archives and Records Administration (NARA). For information on the availability of this material at the NARA, call (202) 741–6030, or go to *http://www.archives.gov/federal_register/code_of_federal_regulations/ibr_locations.html.*

**Note 2:** The subject of this AD is addressed in French airworthiness directive 2002–514(B) R1, dated November 13, 2002.

**Effective Date**

(f) The effective date of this amendment remains December 5, 2005.

Issued in Renton, Washington, on December 15, 2005.

**Ali Bahrami,**

*Manager, Transport Airplane Directorate, Aircraft Certification Service.*

[FR Doc. 05–24525 Filed 12–28–05; 8:45 am]

BILLING CODE 4910–13–P

## DEPARTMENT OF TRANSPORTATION

### Federal Aviation Administration

### 14 CFR Parts 121, 125, 135, and 145

**[Docket No. FAA–2000–7952; Amendment Nos. 121–319, 125–49, 135–102, and 145–26]**

**RIN 2120–AI08**

## Service Difficulty Reports

**AGENCY:** Federal Aviation Administration, DOT.

**ACTION:** Final rule and withdrawal of delayed final rule.

**SUMMARY:** The Federal Aviation Administration (FAA) is withdrawing a delayed final rule published on September 15, 2000. That final rule would have amended the reporting requirements for certificate holders concerning failures, malfunctions, and defects of aircraft, aircraft engines, systems, and components. We are withdrawing this rule to allow the FAA time to re-examine the service difficulty report (SDR) program and consider the comments received since the delayed final rule was published.

In this action we are also adopting several amendments that improve the functioning of the SDR program.

**DATES:** This amendment becomes effective January 30, 2006.

**FOR FURTHER INFORMATION CONTACT:** Emilio Estrada, Flight Standards Service, Aircraft Maintenance Division (AFS–300), Federal Aviation Administration, 800 Independence Avenue, SW., Washington, DC 20591, telephone (202) 267–5571, e-mail *emilio.estrada@faa.gov.*

**SUPPLEMENTARY INFORMATION:**

### Availability of Rulemaking Documents

You can get an electronic copy of rulemaking documents using the Internet by—

(1) Searching the Department of Transportation's electronic Docket Management System (DMS) Web site *(http://dms.dot.gov/search);*

(2) Visiting the FAA's Regulations and Policies Web page at *http://www.faa.gov/regulations_policies/;* or

(3) Accessing the Government Printing Office's Web page at *http://www.gpoaccess.gov/fr/index.html.*

You can also get a copy by sending a request to the Federal Aviation Administration, Office of Rulemaking, ARM–1, 800 Independence Avenue SW., Washington, DC 20591, or by calling (202) 267–9680. Make sure to identify the amendment number or docket number of this rulemaking.

**Privacy Act**

Using the search function of the Web site, anyone can find and read the comments received into any of our dockets, including the name of the individual submitting the comment (or signing the comment on behalf of an association, business, labor union, etc.). You may review DOT's complete Privacy Act Statement in the **Federal Register** published on April 11, 2000 (65 FR 19477–78) or you may visit *http://dms.dot.gov.*

**Small Business Regulatory Enforcement Fairness Act**

The Small Business Regulatory Enforcement Fairness Act (SBREFA) of 1996 requires FAA to comply with small entity requests for information or advice about compliance with statutes and regulations within its jurisdiction. If you are a small entity and you have a question regarding this document, you may contact the local FAA official, or the person listed under **FOR FURTHER INFORMATION CONTACT.** You can find out more about SBREFA on the Internet at *http://www.faa.gov/regulations_policies/rulemaking/sbre_act/.*

**Statutory Authority**

Title 49, section 44701 of the United States Code, authorizes the FAA Administrator to prescribe regulations for practices the Administrator finds necessary for safety in air commerce [49 U.S.C. 44701(a)(5)]. Under that statutory authority, the Administrator prescribed regulations for certificate holders on the reporting of failures, malfunctions, and defects of aircraft, aircraft engines, systems, and components (commonly called Service Difficulty Reports). These regulations are found at 14 CFR 121.703, 121.704, 121.705, 125.409, 125.410, 135.415, 135.416, and 145.221. This rulemaking action amends these regulations.

**Background**

On September 15, 2000, the FAA published a final rule entitled, ''Service Difficulty Reports,'' Amendment Numbers 121–279, 125–35, 135–77, and 145–22 (65 FR 56191). That final rule, applicable to air carriers and repair station operators, would have amended the requirements for reporting failures, malfunctions, and defects of aircraft, aircraft engines, systems, and components. In the final rule, the FAA also sought comments on the impact of paperwork and other information collection burdens imposed on the public. The final rule effective date was scheduled for January 16, 2001.

The FAA received written comments raising concerns with many of the provisions of the new SDR requirements. In response, the FAA held a public meeting about the final rule on December 11, 2000. Participants at that public meeting raised significant issues concerning the implementation of the final rule.

As a result of the concerns raised during the comment period and at the public meeting, the FAA delayed the effective date of the final rule to January 31, 2006. The purpose of this delay was to provide us more time to consider industry's concerns.

Since the delayed final rule publication, the FAA amended the SDR requirements for repair stations (66 FR 41117, August 6, 2001). This amendment addressed one of the public meeting commenters' concerns about duplicate reporting by a part 145 certificate holder. Under § 145.221(d), a repair station no longer has an independent SDR reporting provision when performing work for a part 121, 125, or 135 certificate holder.

**Discussion of Comments Received**

We received five comments on the proposal to withdraw the delayed final rule and make amendments to the existing SDR rule (70 FR 54454, September 14, 2005).

*Comment:* Four of the comments support the FAA's proposal to withdraw the delayed final rule. The other commenter suggests an amendment to part 145 be included in this rulemaking.

*FAA Response:* The comments to the delayed final rule, the comments at the public meeting, and the comments to the proposal to withdraw the delayed final rule request that the agency make revisions to the delayed final rule before we proceed with implementation. The FAA agrees and is withdrawing the delayed final rule.

*Comment:* The Regional Airline Association (RAA), representing the views of a segment of the affected aviation industry, supports adopting the proposed changes to the existing SDR rules that:

- Extend the reporting time to submit SDRs from 72 hours to 96 hours.
- Require certificate holders to submit SDRs directly to the FAA's Oklahoma City, Oklahoma Office.
- Allow electronic submission of SDR reports.

*FAA Response:* The FAA is adopting these amendments as proposed. The increase in reporting time will result in fewer supplemental reports, the centralized reporting will result in greater internal efficiencies, and the electronic submitting option will benefit the majority of the current submitters.

*Comment:* The Aeronautical Repair Station Association (ARSA), which represents repair stations certificated under 14 CFR part 145, supports the proposed changes to the existing SDR system and requests an additional correcting change.

Section 145.221(d) allows a repair station to submit a SDR on behalf of a part 121, 125, or 135 certificate holder, provided the report meets the requirements of the applicable operational rule. Paragraph (d) states in a parenthetical that such a report may be ''operational or structural.'' This ''operational or structural'' reference reflects the language in the SDR rule the FAA is withdrawing, which the FAA had issued as a final rule for part 121, 125, and 135 certificate holders before § 145.221 became effective in January 2004. For example, the delayed SDR final rule would have changed the titles of §§ 121.703 and 121.704 to read ''Service difficulty reports (operational)'' and ''Service difficulty reports (structural),'' respectively. This distinction was the subject of much controversy. Many commenters, including ARSA, voiced their concerns with the operational and structural categories. The operational and structural distinction is not present in the existing SDR regulatory language. Leaving such language in § 145.221(d) serves no purpose, and can only create confusion for repair stations who prepare SDRs on behalf of part 121, 125, or 135 certificate holders. Therefore, ARSA requests that the FAA remove the parenthetical language, ''(operational or structural),'' in § 145.221(d) to conform the language in part 145 with the language in parts 121, 125, and 135.

*FAA Response:* The FAA is adopting the change to § 145.221(d) as suggested by ARSA. The change corrects the language of § 145.221 to bring it into conformity with the existing SDR requirements of 14 CFR parts 121, 125, and 135. The correcting change, which is a logical outgrowth of the proposal, would not impose any additional burdens on the regulated public.

*Comment:* An individual commenter asks that the proposed changes to the existing SDR rule be included in 14 CFR 145.221, Reports of failures, malfunctions, or defects.

*FAA Response:* Only one of the proposed changes, the requirement for the certificate holder to submit SDRs directly to the FAA's Oklahoma Office, is not already incorporated into § 145.221. The FAA has decided not to add the centralized reporting requirement to § 145.221 in this

rulemaking action. A repair station, operating under part 145, will continue to submit their SDRs to their assigned Principal Inspector using the existing procedures. The FAA would want to receive comments on a change in the reporting procedure for part 145 certificate holders before implementing such a change. The FAA does not want to delay the remainder of this rulemaking while we solicit and review comments on this one change. As part of the FAA's review of the SDR program discussed later in this document we will consider a change to the part 145 reporting procedure as the commenter suggested. Future SDR rulemaking may propose such a requirement.

*Comment:* One individual commenter does not agree with the proposed changes to the existing reporting rule that specifically requires all SDRs be reported to Oklahoma City. The same reasons that are driving the withdrawal of the delayed final rule (software capability, the need for greater FAA efficiency in processing SDRs, etc.) have not been resolved. The commenter claims requiring a person to submit SDRs directly to Oklahoma City will be fraught with error and difficulty.

From the commenter's experience, an SDR submitted electronically creates more work for the individual or air carrier. When submitted electronically, the submitter must continually check the SDR database to insure that the SDR has not been sent back for correction, to make sure that it has been processed. The commenter recently stopped using the electronic submission method because he had a severe back log of unprocessed submitted SDRs. The return to paper submissions has reduced the number of man-hours per week from eight to around one.

The commenter suggests that the FAA fix their internal SDR processing problems before any new SDR requirement of any kind is introduced and made mandatory. Secondly, if the assigned Principal Inspector still has the requirement to review the submissions, then those submissions should go to the inspector first. It would be up to the FAA how to enforce and insure that the principal sends these on to Oklahoma City in a timely manner, not industry.

*FAA response:* The FAA disagrees with the commenter's conclusion about the problems with electronic reporting. Many air carriers, repair stations, and individuals are submitting SDRs electronically without problem. The FAA did experience technical difficulties with electronic reporting prior to 2004. In April 2004, we developed improved SDR web site instructions with the help of a FAA PMI for a major U.S. air carrier. These instructions resulted in new web procedures, which enabled the FAA certificate management office (CMO) to electronically conduct the same SDR reviews and approvals that they performed with the hardcopy SDRs, but in a shorter period of time. As result, the instructions helped to improve the air carrier's, the CMO's, and FAA's Oklahoma City Office efficiency of operation. These new instructions are in wider use today and are available on the Flight Standards Internet Service Difficulty Reporting (iSDR) web site, which is located at *http://av-info.faa.gov/isdr/.* We have found that once the operator and FAA personnel become familiar with these new procedures we have received only enthusiastic and favorable feedback. These instructions are also available upon request to the Aviation Data Systems Branch (AFS–620) 6500 South MacArthur Blvd., Oklahoma City, Oklahoma 73169 (hand delivered), or P.O. Box 25082, Oklahoma City, Oklahoma 73125 (U.S. Mail), Telephone: (405) 954–4391. A copy has also been placed in the Rules Docket.

The FAA concedes that the SDR system still needs improvements, but with the new instructions the system has been enhanced to the point where electronic submission of SDRs to Oklahoma City benefit the majority of submitters. The electronic submission method continues to be optional.

*Comment:* An individual commenter said the FAA is taking positive steps in the direction developed by the Commercial Airplane Certification Process (CPS) group. The commenter requests the recommendations of the CPS committee group be used as a framework to develop new reporting requirements. The commenter emphasized the members of the CPS represented a good cross section of the industry and FAA.

*FAA response:* The FAA agrees, and as described below, is studying the recommendations of the CPS for future rulemaking action.

**The Final Rule Withdrawal**

The FAA's intent in the delayed final rule was to improve the SDR program without having an adverse impact on industry recordkeeping practices. The SDR requirements were adopted to correct known deficiencies in the SDR program and to improve the quality of the data in the SDR database. Based on the comments received and information gathered at the public meeting, we now realize the delayed final rule does not meet this intent. The industry concerns highlight the need to resolve problems with the SDR program before increasing the amount and type of data recorded.

The topic that received the most comments following publication of the delayed final rule was the FAA's economic analysis. The commenters were uniform in their contention that the additional reporting requirements would greatly increase the costs of compliance under the SDR program. The FAA received cost estimates from industry that considerably exceeded our own estimates based, in part, on the wide disparity between the industry's and the FAA's evaluation of the number of SDRs resulting from the rulemaking.

While not completely agreeing with the industry's estimate of the increase in the number of reports or the significant increase in costs, we have determined that varying interpretations of the number of additional reports required by the rule could have led industry to overestimate the costs of compliance with the delayed final rule. We have reevaluated the delayed final rule in light of the data provided in the comments and have determined that the costs of this rulemaking may be higher than projected. We further acknowledge that populating data collection systems with inappropriate data could have a negative impact on our ability to identify and collect meaningful safety data on the operation of aircraft.

Since the public meeting, we have considered how to address industry concerns about the delayed final rule and, at the same time, maintain its original intent to correct deficiencies in the program and improve the quality of data collected. The FAA is also obligated to review and consider the findings about the SDR program noted in the CPS study. The CPS identified certain underlying deficiencies in the SDR program that should be corrected so data collected may provide the maximum safety benefit. A copy of the CPS report has been placed in the docket for this rulemaking.

Based on the comments received and the CPS findings, the FAA has determined there is a need to enhance the SDR program so it meets the needs of the FAA and industry more efficiently and effectively. Rather than continuing to delay the effective date of the final rule while we address this issue, we determined it is prudent to withdraw the delayed final rule. This approach will eliminate uncertainty about the final rule's status and allow us time to thoroughly evaluate and improve the SDR program. The effect of this withdrawal is the retention of the regulations currently in effect.

**The Future of the SDR System**

The FAA is still pursuing changes to the SDR system that will address the CPS findings and the feedback we received from this withdrawn final rule. We plan to evaluate the present SDR system and issues related to its associated Management Information System (MIS) database. We will also reexamine the economic impact of any new changes to the SDR system. All amendments to the SDR regulations will be preceded by an NPRM.

**Amending the Existing Rule**

The FAA is making several changes to the existing SDR program regulations. Most of these changes were already incorporated in the final rule we are now withdrawing. We are proceeding with these changes because they will improve the SDR program.

*Sections 121.703, 125.409, 135.415, and 145.221*

The FAA is renaming §§ 121.703, 125.409, 135.415, and 145.221 as ''Service Difficulty Reports.'' The existing titles reflect the varying names these reports have been called over the years by different parties, which resulted in some confusion. This amendment uses the most common industry term for SDRs and will result in the use of only one consistent term when referring to these reports.

*Sections 121.703(d), 125.409(b), and 135.415(d)*

The FAA adopts three changes to improve the process of submitting SDRs to the FAA under these sections:

(1) Replacing the terms ''send,'' ''mailed,'' or ''delivered'' with the term ''submit.'' This change allows for the use of other means, such as electronic transmission, to submit SDRs to the FAA.

(2) Increasing the time for submitting an SDR from 72 hours to 96 hours after an event occurs that requires an SDR. The increased reporting time gives certificate holders additional time to prepare the SDR and should reduce the number of supplemental SDRs that need to be filed. A reduction of supplemental SDRs should reduce the administrative burden on both the FAA and industry.

(3) Changing the location to which the certificate holder must send SDRs. The existing rule required SDRs to be sent directly to the Certificate Holding District Office (CHDO). There, the SDRs are reviewed by the assigned Principal Maintenance Inspector (PMI) and then forwarded to the FAA offices in Oklahoma City, Oklahoma, where all SDRs are entered into the SDR database. The revised rule requires the certificate holder to send SDRs directly to our Oklahoma City office. The PMI would be instructed by internal agency procedures to review the individual SDR for their assigned certificate holder through an internal FAA computer system that would access the SDR database. This revised procedure removes the intermediate step of processing SDRs through the PMI, but does not relieve the PMI of the responsibility for reviewing them. The change would also facilitate electronic reporting by eliminating the necessity of delivering a copy to the PMI. The certificate holder would retain the option of submitting paper SDRs should it so choose, although the FAA strongly encourages electronic reporting. In this final rule, we made editorial changes to §§ 125.409(b) and 135.415(d) to make them consistent with § 121.703(d). The centralized collection point is the FAA office in Oklahoma City, Oklahoma.

Finally, for only § 135.415, the FAA is removing the provision for aircraft operated where mail is not collected. This was an outdated provision that was rarely used by the industry. Mail service is available now in most locations and various alternatives to the U.S. Mail exist.

*Section 121.703(e)*

The amended rule requires certificate holders to submit SDRs in a form or format acceptable to the Administrator. Many operators have voluntarily adopted reporting formats compatible with the FAA's electronic systems to simplify their reporting under the existing rule. Electronic submission of SDRs through the FAA Web site is an acceptable format. This provision is intended to assure that, regardless of the method and format chosen for use, the information we receive is readable. However, when using electronic technology, the electronic language used must be one the FAA is capable of reading.

*Section 145.221(d)*

The amended rule would delete the parenthetical (operational or structural) to bring the SDR requirements in part 145 into conformity with the language of the existing SDR rules.

**Paperwork Reduction Act**

Information collection requirements associated with this final rule have been approved previously by the Office of Management and Budget (OMB) under the provisions of the Paperwork Reduction Act of 1995 (44 U.S.C. 3507(d)), and have been assigned OMB Control Number 2120–0008 (part 121), 2120–0085 (part 125), 2120–0039 (part 135), and 2120–0003 (part 145). In the NPRM, we incorrectly referenced a single OMB Control Number 2120–0663 for all four parts cited above.

This final rule contains several changes to the existing SDR rule. We changed the mailing address for SDR reports; we replaced the words ''send,'' ''mailed,'' and ''delivered'' with ''submit''; and we lengthened the submittal period for the SDR to reduce the number of supplementary reports from certificate holders.

An agency may not collect or sponsor the collection of information, nor may it impose an information collection requirement unless it displays a currently valid Office of Management and Budget (OMB) control number.

**Economic Assessment, Regulatory Flexibility Determination, Trade Impact Assessment, and Unfunded Mandates Assessment**

Changes to Federal regulations must undergo several economic analyses. First, Executive Order 12866 directs each Federal agency to propose or adopt a regulation only upon a reasoned determination that the benefits of the intended regulation justify its costs. Second, the Regulatory Flexibility Act of 1980 requires agencies to analyze the economic impact of regulatory changes on small entities. Third, the Trade Agreements Act (19 U.S.C. 2531–2533) prohibits agencies from setting standards that create unnecessary obstacles to the foreign commerce of the United States. In developing U.S. standards, this Trade Act also requires agencies to consider international standards and, where appropriate, use them as the basis of U.S. standards. Fourth, the Unfunded Mandates Reform Act of 1995 (Pub. L. 104–4) requires agencies to prepare a written assessment of the costs, benefits, and other effects of proposed or final rules that include a Federal mandate likely to result in the expenditure by State, local, or tribal governments, in the aggregate, or by the private sector, of $100 million or more annually (adjusted for inflation.)

In conducting these analyses, FAA has determined this rule: (1) Has benefits that justify its costs, is not a ''significant regulatory action'' as defined in section 3(f) of Executive Order 12866 and is not ''significant'' as defined in Department of Transportation Regulatory Policies and Procedures; (2) will not have a significant economic impact on a substantial number of small entities; (3) would have only a domestic impact and therefore no affect on any trade-sensitive activity; and (4) does not impose an unfunded mandate on state, local, or tribal governments, or on the

private sector. These analyses, available in the rulemaking docket, are summarized below.

*Costs*

This final rule imposes minimal new costs on industry, and results in cost-savings ranging from $16.13 million ($11.33 million, discounted) to $38.96 million ($27.36 million, discounted). This results in a net cost savings to industry ranging from $15.98 million ($11.23 million, discounted) to $38.97 million ($27.37 million, discounted). The impacts to the FAA are additional costs of $145,200 ($102,000, discounted) and savings of $9,300 ($6,500, discounted). The FAA has determined this rule to be cost beneficial.

*Benefits*

A significant effort is underway to improve the quality of aviation safety data identification and collection. This rulemaking is a component of this effort and proposes changes to improve the existing SDR program. These changes include:

- Extending the reporting time to submit SDRs from 72 hours to 96 hours.
- Requiring part 121, 125, and 135 certificate holders to submit SDRs directly to a centralized collection point, thus allowing the reports to be entered into the SDR database quicker and reducing the administrative workload of the certificate-holding district office (CHDO).
- Allowing electronic submission of SDR reports.

**Regulatory Flexibility Determination**

The Regulatory Flexibility Act of 1980 (RFA) establishes ''as a principle of regulatory issuance that agencies shall endeavor, consistent with the objective of the rule and of applicable statutes, to fit regulatory and informational requirements to the scale of the business, organizations, and governmental jurisdictions subject to regulation.'' To achieve that principle, the RFA requires agencies to solicit and consider flexible regulatory proposals and to explain the rationale for their actions. The RFA covers a wide range of small entities, including small businesses, not-for-profit organizations, and small governmental jurisdictions.

Agencies must perform a review to determine whether a proposed or final rule will have a significant economic impact on a substantial number of small entities. If the agency determines that it will, the agency must prepare a regulatory flexibility analysis as described in the Act.

However, if an agency determines that a proposed or final rule is not expected to have a significant economic impact on a substantial number of small entities, section 605(b) of the 1980 RFA provides that the head of the agency may so certify and a regulatory flexibility analysis is not required. The certification must include a statement providing the factual basis for this determination, and the reasoning should be clear.

For this rule, the small entity group is considered to be 14 CFR part 121, 125, and 135 certificate holders (North American Industry Classification System [NAICS] 481111). For this analysis, the FAA considers each part 125 and 135 certificate holder to be a small entity, and some of the part 121 and 121/135 certificate holders are also small entities.

These regulations result in cost savings for all 121, 125, and 135 certificate holders of between $16.13 million ($11.33 million, discounted) to $38.96 million ($27.36 million, discounted) over the next ten years or, on average, between $1.61 million to $3.90 million per year. Assuming that the cost savings is spread among the types of 121, 125, and 135 certificate holders in proportion to the number of SDRs each type generated from January 1, 2002, through August 31, 2004, the average part 121 certificate holder will save between $13,010 and $31,424 a year, the average part 121/135 certificate holder will save between $3,511 and $8,479 a year, the average part 125 certificate holder will save between $16 and $39 a year, and the average part 135 certificate holder will save between $68 and $165 a year. Thus, the economic impact is minimal. Therefore, I certify that this action would not have a significant economic impact on a substantial number of small entities.

**International Trade Impact Assessment**

The Trade Agreement Act of 1979 prohibits Federal agencies from establishing any standards or engaging in related activities that create unnecessary obstacles to the foreign commerce of the United States. Legitimate domestic objectives, such as safety, are not considered unnecessary obstacles. The statute also requires consideration of international standards and, where appropriate, that they be the basis for U.S. standards. The FAA has assessed the potential effect of this final rule and has determined that it will have only a domestic impact and therefore no affect on any trade-sensitive activity.

**Unfunded Mandates Assessment**

The Unfunded Mandates Reform Act of 1995 (the Act) is intended, among other things, to curb the practice of imposing unfunded Federal mandates on State, local, and tribal governments. Title II of the Act requires each Federal agency to prepare a written statement assessing the effects of any Federal mandate in a proposed or final agency rule that may result in an expenditure of $100 million or more (adjusted annually for inflation) in any one year by State, local, and tribal governments, in the aggregate, or by the private sector; such a mandate is deemed to be a ''significant regulatory action.'' The FAA currently uses an inflation-adjusted value of $120.7 million in lieu of $100 million.

This final rule does not contain such a mandate. The requirements of Title II do not apply.

**Executive Order 13132, Federalism**

The FAA has analyzed this final rule under the principles and criteria of Executive Order 13132, Federalism. We determined that this action will not have a substantial direct effect on the States, or the relationship between the national Government and the States, or on the distribution of power and responsibilities among the various levels of government, and therefore does not have federalism implications.

**Environmental Analysis**

FAA Order 1050.1E identifies FAA actions that are categorically excluded from preparation of an environmental assessment or environmental impact statement under the National Environmental Policy Act in the absence of extraordinary circumstances. The FAA has determined this rulemaking action qualifies for the categorical exclusion identified in Appendix 4, paragraph 4(j) of the FAA Order, and involves no extraordinary circumstances.

**Regulations That Significantly Affect Energy Supply, Distribution, or Use**

The FAA has analyzed this final rule under Executive Order 13211, Actions Concerning Regulations that Significantly Affect Energy Supply, Distribution, or Use (May 18, 2001). We have determined that it is not a ''significant energy action'' under the executive order because it is not a ''significant regulatory action'' under Executive Order 12866, and it is not likely to have a significant adverse effect on the supply, distribution, or use of energy.

**List of Subjects**

*14 CFR Part 121*

Air carriers, Aircraft, Aviation safety, Reporting and recordkeeping requirements, Safety, Transportation.

*14 CFR Part 125*

Aircraft, Aviation safety, Reporting and recordkeeping requirements.

*14 CFR Part 135*

Air taxis, Aircraft, Aviation safety, Reporting and recordkeeping requirements.

*14 CFR Part 145*

Aircraft, Aviation safety, Reporting and recordkeeping requirements.

**The Amendment**

■ In consideration of the foregoing, the Federal Aviation Administration withdraws the final rule published at 65 FR 56192 on September 15, 2000 and delayed at 66 FR 21626, April 30, 2001; 66 FR 58912, November 23, 2001; 67 FR 78970, December 27, 2002; and 68 FR 75116, December 30, 2003. The FAA also amends Chapter I of Title 14, Code of Federal Regulations as follows:

## PART 121—OPERATING REQUIREMENTS: DOMESTIC, FLAG, AND SUPPLEMENTAL OPERATIONS

■ 1. The authority citation for part 121 continues to read as follows:

**Authority:** 49 U.S.C. 106(g), 40113, 40119, 41706, 44101, 44701–44702, 44705, 44709–44711, 44713, 44716–44717, 44722, 44901, 44903–44904, 44912, 45101–45105, 46105, 46301.

### § 121.703 Service difficulty reports.

■ 2. Amend § 121.703 to revise the heading as set forth above and to revise paragraphs (d) and (e) introductory text to read as follows:

* * * * *

(d) Each certificate holder shall submit each report required by this section, covering each 24-hour period beginning at 0900 local time of each day and ending at 0900 local time on the next day, to the FAA offices in Oklahoma City, Oklahoma. Each report of occurrences during a 24-hour period shall be submitted to the collection point within the next 96 hours. However, a report due on Saturday or Sunday may be submitted on the following Monday, and a report due on a holiday may be submitted on the next work day.

(e) The certificate holder shall submit the reports required by this section on a form or in another format acceptable to the Administrator. The reports shall include the following information:

* * * * *

■ 3. Amend § 121.705 to revise the introductory text to read as follows:

### § 121.705 Mechanical interruption summary report.

Each certificate holder shall submit to the Administrator, before the end of the 10th day of the following month, a summary report for the previous month of:

* * * * *

## PART 125—CERTIFICATION AND OPERATIONS: AIRPLANES HAVING A SEATING CAPACITY OF 20 OR MORE PASSENGERS OR A MAXIMUM PAYLOAD CAPACITY OF 6,000 POUNDS OR MORE; AND RULES GOVERNING PERSONS ON BOARD SUCH AIRCRAFT

■ 4. The authority citation for part 125 continues to read as follows:

**Authority:** 49 U.S.C. 106(g), 40113, 44701–44702, 44705, 44710–44711, 44713, 44716–44717, 44722.

### § 125.409 Service difficulty reports.

■ 5. Amend § 125.409 to revise the heading as set forth above and to revise paragraph (b) to read as follows:

* * * * *

(b) Each certificate holder shall submit each report required by this section, covering each 24-hour period beginning at 0900 local time of each day and ending at 0900 local time on the next day, to the FAA office in Oklahoma City, Oklahoma. Each report of occurrences during a 24-hour period shall be submitted to the collection point within the next 96 hours. However, a report due on Saturday or Sunday may be submitted on the following Monday, and a report due on a holiday may be submitted on the next work day.

## PART 135—OPERATING REQUIREMENTS: COMMUTER AND ON-DEMAND OPERATIONS AND RULES GOVERNING PERSONS ON BOARD SUCH AIRCRAFT

■ 6. The authority citation for part 135 continues to read as follows:

**Authority:** 49 U.S.C. 106(g), 41706, 44113, 44701–44702, 44705, 44709, 44711–44713, 44715–44717, 44722.

### § 135.415 Service difficulty reports.

■ 7. Amend § 135.415 to revise the heading as set forth above and to revise paragraph (d) to read as follows:

* * * * *

(d) Each certificate holder shall submit each report required by this section, covering each 24-hour period beginning at 0900 local time of each day and ending at 0900 local time on the next day, to the FAA offices in Oklahoma City, Oklahoma. Each report of occurrences during a 24-hour period shall be submitted to the collection point within the next 96 hours. However, a report due on Saturday or Sunday may be submitted on the following Monday, and a report due on a holiday may be submitted on the next workday.

* * * * *

## PART 145—REPAIR STATIONS

■ 8. The authority citation for part 145 continues to read as follows:

**Authority:** 49 U.S.C. 106(g), 40113, 44701–44702, 44707, 44709, 44717.

### § 145.221 Service difficulty reports.

■ 9. Amend § 145.221 to revise the heading as set forth above and to revise paragraph (d) introductory text to read as follows:

* * * * *

(d) A certificated repair station may submit a service difficulty report for the following:

* * * * *

Issued in Washington, DC, on December 22, 2005.

**Marion C. Blakey,**

*Administrator.*

[FR Doc. 05–24536 Filed 12–28–05; 8:45 am]

BILLING CODE 4910–13–P

---

## DEPARTMENT OF LABOR

## Occupational Safety and Health Administration

## 29 CFR Parts 1926 and 1928

**[Docket No. S–270–A]**

**RIN 1218–AC15**

## Roll-Over Protective Structures

**AGENCY:** Occupational Safety and Health Administration (OSHA), DOL.

**ACTION:** Direct final rule.

**SUMMARY:** In 1996, OSHA published a technical amendment revising the construction and agriculture standards that regulate testing of roll-over protective structures (''ROPS'') used to protect employees who operate wheel-type tractors. This revision removed the original ROPS standards and replaced them with references to national consensus standards for ROPS-testing

requirements. The Agency believed that the national consensus standards essentially duplicated the ROPS standards they replaced, and that any differences between them were not substantive. Subsequently, OSHA identified several substantive differences between the national consensus standards and the original ROPS standards. Therefore, the Agency is reinstating the original ROPS standards by issuing this direct final rule. The reinstated ROPS standards for both construction and agriculture also contain a number of minor revisions that OSHA believes are not substantive and will improve comprehension of, and compliance with, the standards.

**DATES:** This direct final rule will become effective on February 27, 2006 unless significant adverse comment is received by January 30, 2006. If OSHA receives significant adverse comment, it will publish a timely withdrawal of this rule. Submit comments to this direct final rule by the following dates:

*Hard copy:* Submit (i.e., postmarked or sent) comments by *regular mail, express delivery, hand delivery, and courier service* by January 30, 2006.

*Electronic transmission and facsimile:* Submit comments by January 30, 2006.

The incorporation by reference of specific publications listed in this direct final rule is approved by the Director of the Federal Register as of February 27, 2006.

**ADDRESSES:** Submit written comments to this direct final rule—identified by docket number S–270–A or RIN number 1218–AC15—by any of the following methods:

- *Federal eRulemaking Portal: http://www.regulations.gov.* Follow the instructions for submitting comments.
- *OSHA's Web site: http://dockets.osha.gov/.* Follow the instructions for submitting comments.
- *Facsimile:* When written comments are 10 pages or fewer, fax them to the OSHA Docket Office at (202) 693–1648.
- *Regular mail, express delivery, hand delivery, and courier service:* Submit three copies to the OSHA Docket Office, Docket No. S–270–A, U.S. Department of Labor, 200 Constitution Avenue, NW., Room N–2625, Washington, DC 20210; telephone: (202) 693–2350. (OSHA's TTY number is (877) 889–5627.) Please note that security-related problems may result in significant delays in receiving comments and other written materials by regular mail. Telephone the OSHA Docket Office at (202) 693–2350 for information regarding security procedures concerning delivery of materials by express delivery, hand delivery, and messenger service. The hours of operation for the Docket Office are 8:15 a.m. to 4:45 p.m., EST.

*Additional materials:* When a commenter would like to submit additional materials (e.g., studies, journal articles) to supplement comments that were submitted electronically or by facsimile, these materials must be sent, in triplicate hard copy, to the OSHA Docket Office, Technical Data Center, Room N–2625, OSHA, U.S. Department of Labor, 200 Constitution Ave., NW., Washington, DC 20210. These materials must clearly identify the sender's name, date, subject, and docket number (S–270–A) or RIN number (1218–AC15) to enable the Agency to attach them to the appropriate comments.

*Personal information:* OSHA will make available to the public, without revision, all comments and other materials submitted to the docket, including any personal information. Therefore, the Agency cautions commenters about submitting statements they do not want made available to the public, or submitting comments that contain personal information (either about themselves or others) such as social security numbers, birth dates, and medical data.

**FOR FURTHER INFORMATION CONTACT:** For general information and press inquiries, contact Mr. Kevin Ropp, Director, Office of Communications, OSHA, U.S. Department of Labor, Room N–3637, 200 Constitution Avenue, NW., Washington, DC 20210; telephone: (202) 693–1999; fax: (202) 693–1634. For technical inquiries, contact Mr. Mark Hagemann, Acting Director, Office of Safety Systems, OSHA, U.S. Department of Labor, Room N–3609, 200 Constitution Avenue, NW., Washington, DC 20210; telephone: (202) 693–2255; fax: (202) 693–1663. For detailed instructions on submitting comments and for additional information on the rulemaking process, see the ''Public Participation'' heading under the section below titled **SUPPLEMENTARY INFORMATION.**

**SUPPLEMENTARY INFORMATION:**

**Table of Contents**

I. Direct Final Rulemaking
II. Summary and Explanation of the Rulemaking
A. Basis for the Rulemaking
B. Substantive Differences Between the Standards
C. Minor Revisions to the Original OSHA ROPS Standards
III. Procedural Determinations
A. Legal Considerations
B. Economic Analysis and Regulatory Flexibility Certification
C. Paperwork Reduction Act
D. Federalism
E. State-Plan States
F. Unfunded Mandates Reform Act
G. Public Participation
List of Subjects
Authority and Signature
IV. Amended Standards

## I. Direct Final Rulemaking

The Agency uses direct final rulemaking when it expects that a rule will not be controversial. Examples of such rules include minor substantive revisions to regulations, incorporation by reference of the latest edition of a technical or industry consensus standard, and direct incorporations of mandates from new legislation. In direct final rulemaking, OSHA publishes a final rule in the **Federal Register** with a statement that, unless it receives a significant adverse comment by a specified date, the rule will become effective on a designated date thereafter.

OSHA believes that the subject of this rulemaking is suitable for a direct final rule. The Agency bases this decision on substantive differences found between the original OSHA standards on roll-over protective structures (''ROPS'') for the construction and agriculture industries and the national consensus standards issued by the Agency under a 1996 technical amendment to replace the original standards. By replacing the original ROPs testing provisions through a technical amendment, OSHA denied the regulated community an opportunity for notice-and-comment on these substantive differences as required under the Administrative Procedures Act (5 U.S.C. 553(b)) and the Occupational Safety and Health Act of 1970 (29 U.S.C. 655(b)(2) and (b)(3)). Therefore, the Agency has concluded that it has a legal obligation to the regulated community to reinstate the original OSHA standards through this direct final rule. (See section II.A below (''Basis for the Rulemaking'') for a detailed discussion of the Agency's legal analysis of this issue.)

Having concluded that this reinstatement action constitutes a binding legal obligation, the Agency will consider as significant adverse comments only those comments that address: (1) The lawfulness of the procedures used to promulgate the 1996 technical amendment as these procedures relate to the ROPs testing provisions; and (2) whether the minor revisions made to the original ROPS standards in this direct final rule (see a description of these revisions under section II.C of this preamble) are reasonable or appropriate.

The Agency often publishes an identical proposed rule simultaneously

with a direct final rule. In this instance, however, OSHA is not publishing a companion proposed rule. Should OSHA receive any significant adverse comments to this direct final rule, it will withdraw the rule and determine, based on the comments submitted to the record, whether to issue a proposed rule in the future. Accordingly, if OSHA receives timely significant adverse comments on the two issues described in the previous paragraph, it will publish notice of the significant adverse comments in the **Federal Register** and withdraw this direct final rule no later than February 27, 2006.

## II. Summary and Explanation of the Rulemaking

### *A. Basis for the Rulemaking*

On March 7, 1996, OSHA published a technical amendment in the **Federal Register** that revised a number of its standards. Section II.G of the amendment revised the construction and agriculture standards that regulate testing of roll-over protective structures (''ROPS''); employers use these structures to protect employees who operate wheel-type tractors. (See 61 FR 9228.) ROPS testing determines the capacity of ROPS components to absorb energy (i.e., withstand fracturing) during loadings administered under field and/or laboratory conditions, and under different temperature conditions. The revision removed the original, detailed ROPS-testing standards and referred instead to national consensus standards for substantive ROPS-testing requirements. The 1996 technical amendment was part of an OSHA initiative to ''undertake a line-by-line review of * * * regulations to determine where they could be simplified or clarified'' (61 FR 9228).

The Administrative Procedures Act (APA) (5 U.S.C. 553(b)), the Occupational Safety and Health Act of 1970 (OSH Act) (29 U.S.C. 655(b)(2) and (b)(3)), and OSHA's procedural regulations (29 CFR 1911.5) require that OSHA provide notice and an opportunity for comment during substantive rulemaking. However, in the preamble to the 1996 technical amendment, the Agency noted that the technical amendment did not revise the original ROPS standards in any material fashion, and that ''[t]he substantive requirements are unchanged'' between the original ROPS standards and the consensus standards that replaced them (61 FR 9229). For this reason, OSHA determined that the technical amendment did not require notice and an opportunity for comment because it satisfied the ''unnecessary'' exemption specified by the APA (5 U.S.C. 553(b).[1] Relying on the ''unnecessary'' exemption to notice and comment, the Agency stated:

> OSHA has determined that this rulemaking is not subject to the procedures for public notice-and-comment rulemaking specified under section 4 of the Administrative Procedure Act (5 U.S.C. 553) or sec. 6(b) of the Occupational Safety and Health Act of 1970 (29 U.S.C. 655(b)) because this rulemaking does not affect the substantive requirements or coverage of the standards involved. This rulemaking does not modify or revoke existing rights and obligations, and new rights and obligations have not been established. Under this rulemaking, the Agency is merely correcting or clarifying existing regulatory requirements. OSHA therefore finds that public notice-and-comment procedures are unnecessary within the meaning of 5 U.S.C. 553(b)(3)(B) and 29 CFR 1911.5. (61 FR 9229.)

Several years after issuing the 1996 technical amendment, the Agency was informed that several of the original OSHA ROPS provisions differed substantively from the national consensus standards for the construction and agriculture industries (Ex. 4–7). In response to this information, the Agency conducted a thorough evaluation of its original ROPS standards and the ROPS testing requirements contained in the national consensus standards referenced in its current construction and agriculture ROPS standards. OSHA has included in the docket for this rulemaking four side-by-side comparisons of the differences found between the original OSHA standards and the referenced national consensus standards (Exs. 4–1 to 4–4).

Based on the findings of this evaluation, which are described in detail in the following section, the Agency has concluded that differences do exist between its original construction and agriculture ROPS standards and the ROPS standards implemented under the 1996 technical amendment, that these differences have a substantial impact on the regulated community, and that OSHA incorrectly applied the APA's ''unnecessary'' exemption to the ROPs testing procedures. This conclusion is consistent with existing case law. For example, in *Utility Solid Waste Activities Group* v. *Environmental Protection Agency*, 236 F.3d 749 (D.C. Cir. 2001), the court found that an EPA technical amendment had a significant impact on the regulated community and, most importantly, that it did not meet any of the three exemptions to notice-and-comment rulemaking specified by the APA i.e., 5 U.S.C. 553(b)(B) (*Id.* at 754)). In vacating the technical amendment, the court stated, ''The amendment * * * constituted agency action 'without observance of [the] procedure required by law' and, as such, it is 'unlawful and set aside.' 5 U.S.C. 706(2)(D).''

The substantive differences found between the standards and the legal analysis described in the preceding paragraphs support the Agency's conclusion that reinstating the original OSHA standards through this direct final rule is necessary and appropriate. Specifically, the Agency is revoking the references to the national consensus standards for ROPS testing located in paragraphs 29 CFR 1926.1002(a)(i), 1926.1003(a)(i), and 1928.51(b)(1) and reinstating in the construction and agriculture standards the original OSHA ROPS testing provisions. For both the reinstated construction and agriculture ROPS standards, the Agency also has made a number of minor revisions to its original ROPS standards. OSHA believes that these minor revisions will improve comprehension of, and compliance with, the reinstated standards without making substantive revisions.

The following section highlights the substantive differences between its original ROPS testing requirements and the testing provisions of the consensus standards referenced in its current ROPS construction and agriculture standards. The Agency describes in section II.C below the minor revisions it is making to the original OSHA ROPS standards under this direct final rule.

### *B. Substantive Differences Between the Standards*

**Construction standards.** In revising the ROPS standards for construction in the 1996 technical amendment, the Agency deleted paragraphs (c) through (i) and (k) from 29 CFR 1926.1002, which addressed testing of protective frames for wheel-type tractors used in construction, and replaced them with a reference to Society of Automotive Engineers (''SAE'') consensus standard J334a–1970 in paragraph (a)(1) of revised 29 CFR 1926.1002. The Agency also revised 29 CFR 1926.1003, specifying testing requirements for overhead protection used with tractors, by removing paragraphs (c) through (g) and substituting a reference to SAE consensus standard J167–1970 in paragraph (a)(1) of the revised standard.

While most of the revisions to the construction ROPS standards made in the 1996 technical amendment were nonsubstantive, the Agency identified

[1] The three exemptions Specified by this provision of the APA are: Impracticable, unnecessary and contrary to the public interest.

two substantive revisions. The first revision involved paragraph (c)(1) of original 29 CFR 1926.1002, which allowed the regulated community to use *either* a laboratory test *or* a field test for impact testing, while the SAE standard requires *both* tests. Accordingly, this direct final rule reinstates the impact-testing option provided by paragraph (c)(1) of original 29 CFR 1926.1002, and which is not available in the SAE standard. (See Ex. 4–1.)

The second revision addressed paragraphs (i)(ii) of original 29 CFR 1926.1002 and (f)(1) of original 29 CFR 1926.1003, in combination with paragraph (f)(2)(iv) of 29 CFR 1926.1001. These paragraphs permitted manufacturers to conduct the required performance tests using either zero-degree Fahrenheit (0 °F) testing or Charpy V-notch testing, while the SAE standard specifies that performance tests must be conducted only at 0 °F.[2] Therefore, reinstating the original OSHA standards will provide an additional cold-temperature testing option not available in the SAE standard. (See Exs. 4–1 and 4–2.)

**Agriculture standards.** In revising the ROPS standards for the agriculture industry, the Agency deleted entirely original 29 CFR 1928.52 and 1928.53, as well as Appendix B to subpart C of 29 CFR part 1928. The deleted standards specified procedures for testing, respectively, protective frames and enclosures for wheel-type tractors used in agriculture, while Appendix B provided diagrams depicting these testing procedures. In place of these requirements, OSHA referenced SAE consensus standard J334a–1970 and American Society of Agricultural Engineers (''ASAE'') consensus standard S306.3–1974 for protective frames, and SAE consensus standard J168–1970 and ASAE consensus standard S336.1–1974 for protective enclosures, in paragraph (b)(1) of revised 29 CFR 1928.51.

For both protective frames and protective enclosures, the testing conducted under the ASAE and SAE standards generally is consistent with the testing requirements of the original OSHA standards. However, the Agency found several substantive differences between the original OSHA standards and the consensus standards (for testing both protective frames and protective enclosures) that replaced them. First, both the original OSHA standards and the ASAE standards differ substantively from the SAE standards by providing an exemption from field-upset testing based on results for either the static or dynamic versions of the laboratory energy-absorption test,[3] while the SAE standards require field-upset testing only under dynamic test conditions. Consequently, this direct final rule will reinstate the testing exemption found in the original OSHA ROPS standards. (See Exs. 4–3 and 4–4.) Second, the original OSHA and the SAE standards allow either static or dynamic testing at 0 °F, while the ASAE standards limit testing at 0 °F to dynamic testing. Therefore, reinstating the original OSHA standards under this direct final rule restores the testing option found in the original OSHA standards, but which is not in the ASAE standards. (See Exs. 4–3 and 4–4.) Finally, as an alternative to 0 °F testing, the original OSHA and ASAE standards offer the Charpy V-notch test, while the SAE standards do not. Accordingly, reinstating the original OSHA standard will provide an additional cold-temperature testing option not available in the SAE standards. (See Exs. 4–3 and 4–4.)

*C. Minor Revisions to the Original OSHA ROPS Standards*

Paragraph (c)(1) of OSHA's original 29 CFR 1926.1002 contains an editorial error. The original paragraph states that laboratory or field tests ''determine the performance requirements set forth in paragraph (c)(1) of this [standard].'' However, paragraph (i) of the standard, not paragraph (c)(1), provides the performance requirements that the tests must determine. Therefore, OSHA is correcting the reference accordingly.

The Agency also is making two additional revisions related to the original construction standards for ROPS. First, as noted in Ex. 4–1, paragraph 5.3.2 of SAE consensus standard J334a–1970 defines the term ''$P_u$'' as the ''[u]ltimate force capacity of mounting connection, lb (kg).'' However, paragraph (j)(3) of original 29 CFR 1926.1002 lists no definition for this term. Since the original OSHA standard duplicates the remaining terminology of the SAE consensus standard, this rulemaking will add this term and the SAE consensus standard definition to reinstated 29 CFR 1926.1002(j)(3). Second, in reinstating the original 29 CFR 1926.1002 and 1926.1003 standards, OSHA is removing the following sentence from paragraphs (k) and (g) of these respective standards: ''The SAE standard shall be used in the event that questions of interpretation arise.'' The Agency is removing this sentence because the referenced SAE standard provides no additional information on which to base such interpretations.

Finally, the Agency is making a number of plain-language revisions to the regulatory text of the original OSHA ROPS standards for the construction and agriculture industries. The Agency finds that using plain language will improve the comprehensibility of these provisions. These improvements will, in turn, enhance employer compliance with the revised provisions and, concomitantly, increase the protection afforded to employees. OSHA believes that rewriting these provisions in plain language did not alter the substantive requirements of the existing provisions.

## III. Procedural Determinations

*A. Legal Considerations*

The purpose of the Occupational Safety and Health Act of 1970 (''OSH Act''), 29 U.S.C. 651 et seq., is ''to assure so far as possible every working man and woman in the nation safe and healthful working conditions and to preserve our human resources.'' (29 U.S.C. 651(b).) To achieve this goal, Congress authorized the Secretary of Labor to promulgate and enforce occupational safety and health standards. (29 U.S.C. 655(b) and 654(b).) A safety or health standard is a standard ''which requires conditions, or the adoption or use of one or more practices, means, methods, operations, or processes, reasonably necessary or appropriate to provide safe or healthful employment or places of employment.'' (29 U.S.C. 652(8).) A standard is reasonably necessary or appropriate within the meaning of Section 652(8) when a significant risk of material harm exists in the workplace and the standard will reduce substantially or eliminate that workplace risk.

[2] These two tests determine, under controlled laboratory conditions, the reduced-temperature ductility of the carbon steel used to make ROPS. Generally, the less ductile the steel, the more likely it is to fracture with impact during reduced-temperature exposure (thereby losing its protective features). The 0 °F test, used principally by ROPS manufacturers, involves administering impacts and/or loads to the entire ROPS at 0 °F, while the Charpy V-notch test, used primarily by steel manufacturers, applies impacts to steel specimens of a predetermined size at several reduced-temperature levels.

[3] The laboratory energy-absorption test assesses the energy (measured as force multiplied by distance) absorbed by ROPS during laboratory-controlled rear and side impacts. During testing, ROPS components bend as they absorb energy; however, such bending must not exceed the deflection values specified by the OSHA standards (these values represent thresholds beyond which the deflection may endanger the tractor operator). Generally, the tests have a safety margin (e.g., 15%), which means that additional deflection equal to the specified safety margin is possible without jeopardizing safety. The laboratory-based test is derived from the energy-absorbing results obtained for ROPS tested during rear or side field-upset tests, i.e., deflection values are comparable when the same ROPS and tractors are evaluated under the two testing conditions.

OSHA based its original ROPS standards on evidence that these structures are necessary to ensure proper employee protection should wheel-type tractors become unstable and roll backwards or to the side. For this direct final rule, the Agency has determined that the original OSHA construction and agriculture ROPS standards meet the statutory requirements of Section 652(8) of the OSH Act. In addition, OSHA finds that this direct final rule does not increase employers' compliance burdens (see section B (''Economic Analysis and Regulatory Flexibility Certification'') below). Consequently, it is unnecessary to determine significant risk, or the extent to which the direct final rule would reduce that risk, as would typically be required by *Industrial Union Department, AFL–CIO* v. *American Petroleum Institute*, 448 U.S. 607 (1980).

Because OSHA replaced its original ROPs testing provisions through a technical amendment, the regulated community did not have an opportunity for notice and comment on the substantive differences between the original ROPs testing provisions and the consensus standards that replaced them. Such notice and comment are required by the Administrative Procedures Act (5 U.S.C. 553(b)), the Occupational Safety and Health Act of 1970 (29 U.S.C. 655(b)(2) and (b)(3)), and OSHA's procedural regulations (29 CFR 1911.5). Therefore, the Agency has concluded that it has a legal obligation to the regulated community to reinstate the original OSHA standards through this direct final rule.

*B. Economic Analysis and Regulatory Flexibility Certification*

OSHA's Economic Analysis and Regulatory Flexibility Analysis address issues related to the costs, benefits, technological feasibility, and economic impacts (including small business impacts) of this direct final rule reinstating the Agency's original ROPS standards.

Executive Order (''E.O.'') 12866 requires regulatory agencies to conduct an economic analysis for rules that meet certain criteria. The most frequently used criterion under E.O. 12866 is that the rule will have an annual cost impact on the economy of $100 million or more. Neither the benefits nor the costs of this direct final rule exceed $100 million. Nevertheless, the Agency has prepared this economic analysis to summarize this direct final rule's impact, and has concluded that it is not an economically significant regulatory action under E.O. 12866.

Although this direct final rule applies to employers in construction and agriculture so that their employees may operate safe equipment (i.e., wheel-type tractors), it more directly affects equipment manufacturers. Equipment manufacturers design and build machines that have ROPS to meet the testing criteria specified in OSHA's ROPS standards. Fewer than 10 original equipment manufacturers are directly affected by this direct final rule (see Ex. 4–5). Employers in the construction and agriculture industries who purchase and use wheel-type tractors are in violation of OSHA's ROPS standards and are subject to penalty when the tractors do not have protective structures meeting these standards. Therefore, employers in the construction and agriculture industries would be affected indirectly if changing the ROPS testing procedures were to change the price of equipment.

For the purposes of its economic analyses, OSHA generally defines small firms as firms with fewer than 1,000 employees (using the Small Business Administration's definition); however, the Agency may use smaller size categories as well. None of the original equipment manufacturers affected by this direct final rule is a small employer under any of these definitions. However, some small manufacturing firms (e.g., with fewer than 20 employees) may retrofit older, existing equipment with custom-made ROPS, and these firms may be affected by this direct final rule.

As explained in the preamble above, this direct final rule provides equipment manufacturers with more options for testing ROPS than the current OSHA ROPS standards. Therefore, none of the provisions in the direct final rule impose conditions that would generate new costs for equipment manufacturers, including small manufacturing firms. Cost savings under the direct final rule, if any, depend on the extent that equipment manufacturers choose to avail themselves of its alternative provisions. The Agency has not quantified the benefit of the increased testing options to manufacturers. The reinstated standards are both technologically and economically feasible and do not impose new compliance costs on equipment manufacturers or on the construction and agriculture industries. The Agency concludes that the economic impact of the direct final rule will be negligible on any of the potentially affected industries, including potentially affected small employers.

The Regulatory Flexibility Act of 1980 (''RFA''), as amended by the Small Business Regulatory Enforcement Fairness Act of 1996 (5 U.S.C. 601 et seq.), requires regulatory agencies to determine whether regulatory actions will adversely affect small entities. OSHA's threshold criteria for identifying a significant impact include costs exceeding one percent of revenues or five percent of profits. When costs exceed either threshold, then the Agency considers the impact on small entities to be significant for purposes of complying with the RFA. Employers will incur no significant costs of complying with this direct final rule. Accordingly, OSHA certifies that this regulation will not have a significant impact on a substantial number of small entities. In addition, the direct final rule is not a major rule as defined by Section 804 of the Congressional Review Act (5 U.S.C. 801 *et seq.*).

*C. Paperwork Reduction Act*

After analyzing the provisions of this direct final rule in terms of the Paperwork Reduction Act of 1995 (44 U.S.C. 3501 *et seq.* and 5 CFR part 1320), OSHA has determined that these provisions do not impose any collection-of-information (i.e., ''paperwork'') requirements on employers in the construction and agriculture industries who use ROPS to protect employees who operate wheel-type tractors. While several of the provisions reinstated by this direct final rule require that test data be recorded or verified (i.e., 29 CFR 1926.1002(d)(3), (d)(6), (g)(2)(i), (g)(2)(ii), and (g)(2)(iii); 1928.52(d)(2)(iii)(A) and (d)(2)(iii)(F); and 1928.53(d)(1)(iii) and (d)(2)(iii)(B)), these information-collection requirements apply only to ROPS manufacturers, not to the employers who use ROPS on wheel-type tractors. OSHA also concludes that, as a matter of usual and customary business practice, manufacturers record and verify ROPS testing information to ensure the integrity of protective frames and enclosures, and notes that the current SAE and ASAE consensus standards for ROPS require that manufacturers record and verify ROPS test data.

Members of the public may send comments on this paperwork determination to: Office of Information and Regulatory Affairs (Attention: Desk Officer for OSHA), OMB, Room 10235, 726 Jackson Place, NW., Washington, DC 20503. However, no comment received on this paperwork determination will be considered by the Agency to be a ''significant adverse comment'' as specified above under section I (''Direct Final Rulemaking'').

*D. Federalism*

The Agency reviewed the direct final rule according to the most recent Executive Order (''E.O.'') on Federalism (Executive Order 13132, 64 FR 43225, August 10, 1999). This E.O. requires that Federal agencies, to the extent possible, refrain from limiting State policy options, consult with States before taking actions that restrict their policy options, and take such actions only when clear constitutional authority exists and the problem is national in scope. The E.O. allows Federal agencies to preempt State law only with the expressed consent of Congress. In such cases, Federal agencies must limit preemption of State law to the extent possible.

Under Section 18 of the Occupational Safety and Health Act of 1970 (''OSH Act''; 29 U.S.C. 651 *et seq.*), Congress expressly provides OSHA with authority to preempt State occupational safety and health standards. Under the OSH Act, a State can avoid preemption under Section 18 only when it submits, and obtains Federal approval of, a plan for the development and enforcement of safety and health standards (i.e., ''State-Plan State''; see 29 U.S.C. 667). Occupational safety and health standards developed by a State-Plan State must be at least as effective in providing safe and healthful employment and places of employment as the Federal standards. Subject to these requirements, a State-Plan State is free to develop and enforce under State law its own requirements for safety and health standards.

The Agency concludes that this direct final rule complies with E.O. 13132. In States without OSHA-approved State Plans, Congress expressly provides for OSHA standards to preempt State job safety and health rules in areas addressed by Agency standards; in these States, the direct final rule limits State policy options in the same manner as every Agency standard. In States with OSHA-approved State Plans, this action does not significantly limit State policy options.

*E. State-Plan States*

When Federal OSHA promulgates a new standard or imposes additional or more stringent requirements than an existing standard, the 26 States and U.S. Territories with their own OSHA-approved occupational safety and health plans must revise their standards to reflect the new standard or amendment, or show the Agency why such action is unnecessary, e.g., because an existing State standard covering this area already is at least as effective as the new Federal standard or amendment (29 U.S.C. 553.5(a)). The State standard must be at least as effective as the final Federal rule, must be applicable to both the private and public (i.e., State and local government employees) sectors, and must be completed within six months of the publication date of the final Federal rule. When OSHA promulgates a new standard or amendment that does not impose additional or more stringent requirements than an existing standard, States are not required to revise their standards, although the Agency may encourage them to do so. The 26 States and Territories with OSHA-approved State plans are: Alaska, Arizona, California, Hawaii, Indiana, Iowa, Kentucky, Maryland, Michigan, Minnesota, Nevada, New Mexico, North Carolina, Oregon, Puerto Rico, South Carolina, Tennessee, Utah, Vermont, Virginia, Washington, and Wyoming. Connecticut, New Jersey, New York, and the Virgin Islands have OSHA-approved State plans that apply to State and local government employees only. Although this direct final rule does not impose any additional or more stringent requirements on employers compared to the existing standard, the Agency strongly encourages the States and Territories with their own State Plans that currently do not include the original OSHA ROPS testing standards in their construction and agriculture standards to adopt the revisions promulgated under this direct final rule within six months of the date of this **Federal Register** notice, unless OSHA withdraws the Direct Final Rule following the end of the comment period.

*F. Unfunded Mandates Reform Act*

OSHA has reviewed this direct final rule according to the Unfunded Mandates Reform Act of 1995 (''UMRA''; 2 U.S.C. 1501 *et seq.*) and Executive Order 12875. As discussed above in section III.B (''Final Economic Analysis and Regulatory Flexibility Certification'') of this preamble, the Agency has determined that this direct final rule imposes no additional costs on any private-or public-sector entity. Accordingly, this direct final rule requires no additional expenditures by either public or private employers.

As noted earlier, the Agency's standards do not apply to State and local governments, except in States that have voluntarily elected to adopt a State plan approved by the Agency. Consequently, this direct final rule does not meet the definition of a ''Federal intergovernmental mandate'' (see Section 421(5) of the UMRA (2 U.S.C. 658(5)). In conclusion, this direct final rule does not mandate that State, local, and tribal governments adopt new, unfunded regulatory obligations.

*G. Public Participation*

The Agency requests that interested members of the public who submit written comments concerning this direct final rule do so using any of the methods listed above in the section titled **ADDRESSES**. Note, however, that the Agency has defined a significant adverse comment as only those comments that address: (1) The lawfulness of the procedures used to promulgate the 1996 technical amendment as these procedures relate to the ROPs testing provisions; or (2) whether the minor revisions made to the original ROPS standards in this direct final rule are reasonable or appropriate.

OSHA will post all comments received, without revision, to *http://dockets.osha.gov*, including any personal information provided. The Agency cautions commenters about submitting personal information such as social security numbers and birth dates. For access to materials in the docket, including background documents and comments received, go to *http://dockets.osha.gov.* Contact the OSHA Docket Office for information about materials not available through the OSHA webpage, and for assistance in using the webpage to locate docket submissions.

If the Agency receives no significant adverse comment regarding this direct final rule, it will publish a **Federal Register** notice confirming the effective date of this direct final rule. For the purpose of judicial review, OSHA views the date that it confirms the effective date of the direct final rule to be the date of issuance. Additionally, such confirmation may include minor stylistic or technical changes to the regulatory language provided by this notice. If OSHA receives significant adverse comment on this direct final rule, it will withdraw the direct final rule and determine, based on the comments submitted to the record, whether to issue a proposed rule in the future.

**List of Subjects**

*29 CFR Part 1926*

Construction industry, Incorporation by reference, Motor vehicle safety, Occupational safety and health.

*29 CFR Part 1928*

Agriculture, Incorporation by reference, Motor vehicle safety, Occupational safety and health.

**Authority and Signature**

Jonathan L. Snare, Acting Assistant Secretary of Labor for Occupational Safety and Health, U.S. Department of Labor, 200 Constitution Avenue, NW., Washington, DC 20210 authorized the preparation of this direct final rule. The Agency is issuing this direct final rule under the following authorities: Sections 4, 6, and 8 of the Occupational Safety and Health Act of 1970 (29 U.S.C. 653, 655, 657); Section 3704 of the Contract Work Hours and Safety Standards Act (40 U.S.C. 3701 *et seq.*); Secretary of Labor's Order No. 5–2002 (67 FR 65008); and 29 CFR part 1911.

Signed at Washington, DC on December 13, 2005.

**Jonathan L. Snare,**

*Acting Assistant Secretary of Labor.*

## IV. Amended Standards

■ Based on the reasons presented in the preamble to this direct final rule, OSHA is amending 29 CFR parts 1926 and 1928 as follows:

## PART 1926—[AMENDED]

## Subpart W—[Amended]

■ 1. Revise the authority citation for subpart W of part 1926 to read as follows:

**Authority:** Section 3704 of the Contract Work Hours and Safety Standards Act (40 U.S.C. 3701); Sections 4, 6, and 8 of the Occupational Safety and Health Act of 1970 (29 U.S.C. 653, 655, 657); and Secretary of Labor's Order No. 12–71 (36 FR 8754), 8–76 (41 FR 25059), 9–83 (48 FR 35736), 1–90 (55 FR 9033), 6–96 (62 FR 111), 3–2000 (65 FR 50017), or 5–2002 (67 FR 65008), as applicable.

■ 2. Revise §§ 1926.1002 and 1926.1003 and add a new Appendix A to subpart W, to read as follows:

### § 1926.1002 Protective frames (roll-over protective structures, known as ROPS) for wheel-type agricultural and industrial tractors used in construction.

(a) *General.* (1) The purpose of this section is to set forth requirements for frames used to protect operators of wheel-type agricultural and industrial tractors that will minimize the possibility of operator injury resulting from accidental upsets during normal operation. With respect to agricultural and industrial tractors, the provisions of 29 CFR 1926.1001 and 1926.1003 for rubber-tired dozers and rubber-tired loaders may be used instead of the requirements of this section.

(2) The protective frame that is the subject of this standard is a structure mounted to the tractor that extends above the operator's seat and conforms generally to Figure W–14.

(3) When an overhead weather shield is attached to the protective frame, it may be in place during testing, provided that it does not contribute to the strength of the protective frame. When such an overhead weather shield is attached, it must meet the requirements of paragraph (i) of this section.

(4) For overhead protection requirements, see 29 CFR 1926.1003.

(5) The following provisions address requirements for protective enclosures.

(i) When protective enclosures are used on wheel-type agricultural and industrial tractors, they shall meet the requirements of Society of Automotive Engineers (''SAE'') standard J168–1970 (''Protective enclosures—test procedures and performance requirements''), which is incorporated by reference. The incorporation by reference was approved by the Director of the Federal Register in accordance with 5 U.S.C. 552(a) and 1 CFR part 51.

(ii) SAE standard J168–1970 appears in the 1971 SAE Handbook, or it may be examined at: any OSHA Regional Office; the OSHA Docket Office, U.S. Department of Labor, 200 Constitution Avenue, NW., Room N–2625, Washington, DC 20210 (telephone: (202) 693–2350 (TTY number: (877) 889–5627)); or the National Archives and Records Administration (''NARA''). (For information on the availability of this material at NARA, telephone (202) 741–6030 or access the NARA Web site at *www.archives.gov/federal_register/code_of_federal_regulations/ibr_locations.html.*) Copies may be purchased from the Society of Automotive Engineers, 400 Commonwealth Drive, Warrendale, Pennsylvania 15096–0001.

(b) *Applicability.* The requirements of this section apply to wheel-type agricultural and industrial tractors used in construction work. See paragraph (j) of this section for definitions of agricultural tractors set forth in paragraph (i) of this section.

(c) *Performance requirements.* (1) Either a laboratory test or a field test is required to determine the performance requirements set forth in paragraph (i) of this section.

(2) A laboratory test may be either static or dynamic. The laboratory test must be under conditions of repeatable and controlled loading to permit analysis of the protective frame.

(3) A field-upset test, when used, shall be conducted under reasonably controlled conditions, both rearward and sideways to verify the effectiveness of the protective frame under actual dynamic conditions.

(d) *Test procedures—general.* (1) The tractor used shall be the tractor with the greatest weight on which the protective frame is to be used.

(2) A new protective frame and mounting connections of the same design shall be used for each test procedure.

(3) Instantaneous and permanent frame deformation shall be measured and recorded for each segment of the test.

(4) Dimensions relative to the seat shall be determined with the seat unloaded and adjusted to its highest and most rearward latched position provided for a seated operator.

(5) When the seat is offset, the frame loading shall be on the side with the least space between the centerline of the seat and the upright.

(6) The low-temperature impact strength of the material used in the protective structure shall be verified by suitable material tests or material certifications according to 29 CFR 1926.1001(f)(2)(iv).

(e) *Test procedure for vehicle overturn.* (1) *Vehicle weight.* The weight of the tractor, for purposes of this section, includes the protective frame, all fuels, and other components required for normal use of the tractor. Ballast must be added when necessary to achieve a minimum total weight of 130 lb (59 kg) per maximum power-takeoff horsepower at the rated engine speed. The weight of the front end must be at least 33 lb (15 kg) per maximum power-takeoff horsepower. In case power-takeoff horsepower is unavailable, 95 percent of net engine flywheel horsepower shall be used.

(2) Agricultural tractors shall be tested at the weight set forth in paragraph (e)(1) of this section.

(3) Industrial tractors shall be tested with items of integral or mounted equipment and ballast that are sold as standard equipment or approved by the vehicle manufacturer for use with the vehicle when the protective frame is expected to provide protection for the operator with such equipment installed. The total vehicle weight and front-end weight as tested shall not be less than the weights established in paragraph (e)(1) of this section.

(4) The following provisions address soil bank test conditions.

(i) The test shall be conducted on a dry, firm soil bank as illustrated in Figure W–15. The soil in the impact area shall have an average cone index in the 0-in. to 6-in. (0-mm to 153-mm) layer not less than 150 according to American Society of Agricultural Engineers (''ASAE'') recommendation ASAE R313.1–1971 (''Soil cone

penetrometer''), as reconfirmed in 1975, which is incorporated by reference. The incorporation by reference was approved by the Director of the Federal Register in accordance with 5 U.S.C. 552(a) and 1 CFR part 51. The path of vehicle travel shall be 12° ± 2° to the top edge of the bank.

(ii) ASAE recommendation ASAE R313.1–1971, as reconfirmed in 1975, appears in the 1977 Agricultural Engineers Yearbook, or it may be examined at: any OSHA Regional Office; the OSHA Docket Office, U.S. Department of Labor, 200 Constitution Avenue, NW., Room N–2625, Washington, DC 20210 (telephone: (202) 693–2350 (TTY number: (877) 889–5627)); or the National Archives and Records Administration (''NARA''). (For information on the availability of this material at NARA, telephone (202) 741–6030 or access the NARA Web site at *www.archives.gov/federal_register/code_of_federal_regulations/ibr_locations.html*). Copies may be purchased from the American Society of Agricultural Engineers 2950 Niles Road, St. Joseph, MI 49085.

(5) The upper edge of the bank shall be equipped with an 18-in. (457-mm) high ramp as described in Figure W–15 to assist in tipping the vehicle.

(6) The front and rear wheel-tread settings, when adjustable, shall be at the position nearest to halfway between the minimum and maximum settings obtainable on the vehicle. When only two settings are obtainable, the minimum setting shall be used.

(7) *Vehicle overturn test—sideways and rearward.* (i) The tractor shall be driven under its own power along the specified path of travel at a minimum speed of 10 mph (16 kph), or maximum vehicle speed when under 10 mph (16 kph), up the ramp as described in paragraph (d)(5) of this section to induce sideways overturn.

(ii) Rear upset shall be induced by engine power with the tractor operating in gear to obtain 3 to 5 mph (4.8 to 8 kph) at maximum governed engine rpm, preferably by driving forward directly up a minimum slope of two vertical to one horizontal. The engine clutch may be used to aid in inducing the upset.

(f) *Other test procedures.* When the field-upset test is not used to determine ROPS performance, either the static test or the dynamic test, contained in paragraph (g) or (h) of this section, shall be made.

(g) *Static test.* (1) *Test conditions.* (i) The laboratory mounting base shall include that part of the tractor chassis to which the protective frame is attached, including the mounting parts.

(ii) The protective frame shall be instrumented with the necessary equipment to obtain the required load-deflection data at the locations and directions specified in Figures W–16, W–17, and W–18.

(iii) The protective frame and mounting connections shall be instrumented with the necessary recording equipment to obtain the required load-deflection data to be used in calculating *FSB* (see paragraph (j)(3) of this section). The gauges shall be placed on mounting connections before the installation load is applied.

(2) *Test procedure.* (i) The side-load application shall be at the upper extremity of the frame upright at a 90° angle to the centerline of the vehicle. The side load *L* shall be applied according to Figure W–16. *L* and *D* shall be recorded simultaneously. The test shall be stopped when:

(A) The strain energy absorbed by the frame is equal to the required input energy ($E_{is}$);

(B) Deflection of the frame exceeds the allowable deflection; or

(C) The frame load limit occurs before the allowable deflection is reached in the side load.

(ii) The *L–D* diagram (see Figure W–19 for an example) shall be constructed using the data obtained according to paragraph (g)(2)(i) of this section.

(iii) The modified $L_m$–$D_m$ diagram shall be constructed according to paragraph (g)(2)(ii) and Figure W–20 of this section. The strain energy absorbed by the frame ($E_u$) shall then be determined.

(iv) $E_{is}$, *FER*, and *FSB* shall be calculated.

(v) The test procedure shall be repeated on the same frame using *L* (rear input; see Figure W–18) and $E_{ir}$. Rear-load application shall be distributed uniformly along a maximum projected dimension of 27 in. (686 mm) and a maximum area of 160 sq. in. (1,032 sq. cm) normal to the direction of load application. The load shall be applied to the upper extremity of the frame at the point that is midway between the centerline of the seat and the inside of the frame upright.

(h) *Dynamic test.* (1) *Test conditions.* (i) The protective frame and tractor shall meet the requirements of paragraphs (e)(2) or (3) of this section, as appropriate.

(ii) The dynamic loading shall be produced by using a 4,410-lb (2,000-kg) weight acting as a pendulum. The impact face of the weight shall be 27 ± 1 in. by 27 ± 1 in. (686 ± 25 mm by 686 ± 25 mm), and shall be constructed so that its center of gravity is within 1.0 in. (25.4 mm) of its geometric center. The weight shall be suspended from a pivot point 18 to 22 ft (5.5 to 6.7 m) above the point of impact on the frame, and shall be conveniently and safely adjustable for height (see Figure W–21).

(iii) For each phase of testing, the tractor shall be restrained from moving when the dynamic load is applied. The restraining members shall be 0.50- to 0.63-in. (12.5- to 16.0-mm) steel cable, and points for attaching restraining members shall be located an appropriate distance behind the rear axle and in front of the front axle to provide a 15° to 30° angle between the restraining cable and the horizontal. The restraining cables shall either be in the plane in which the center of gravity of the pendulum will swing, or more than one restraining cable shall give a resultant force in this plane (see Figure W–22).

(iv) The wheel-tread setting shall comply with the requirements of paragraph (e)(6) of this section. The tires shall have no liquid ballast, and shall be inflated to the maximum operating pressure recommended by the tire manufacturer. With the specified tire inflation, the restraining cables shall be tightened to provide tire deflection of 6 to 8 percent of the nominal tire-section width. After the vehicle is restrained properly, a wooden beam that is 6-in. × 6-in. (150 mm × 150 mm) shall be driven tightly against the appropriate wheels and clamped. For the test to the side, an additional wooden beam shall be placed as a prop against the wheel nearest to the operator's station, and shall be secured to the floor so that when it is positioned against the wheel rim, it is at an angle of 25° to 40° to the horizontal. It shall have a length 20 to 25 times its depth, and a width two to three times its depth (see Figures W–22 and W–23).

(v) Means shall be provided for indicating the maximum instantaneous deflection along the line f impact. A simple friction device is illustrated in Figure W–23.

(vi) No repair or adjustments may be carried out during the test.

(vii) When any cables, props, or blocking shift or break during the test, the test shall be repeated.

(2) *Test procedure.* (i) *General.* The frame shall be evaluated by imposing dynamic loading to the rear, followed by a load to the side on the same frame. The pendulum dropped from the height (see the definition of ''*H*'' in paragraph (j)(3) of this section) imposes the dynamic load. The position of the pendulum shall be so selected that the initial point of impact on the frame shall be in line with the arc of travel of the center of gravity of the pendulum. A quick-release mechanism should be

used but, when used, it shall not influence the attitude of the block.

(ii) *Impact at rear.* The tractor shall be restrained properly according to paragraphs (h)(1)(iii) and (h)(1)(iv) of this section. The tractor shall be positioned with respect to the pivot point of the pendulum so that the pendulum is 20° from the vertical prior to impact as shown in Figure W–22. The impact shall be applied to the upper extremity of the frame at the point that is midway between the centerline of the frame and the inside of the frame upright of a new frame.

(iii) *Impact at side.* The blocking and restraining shall conform to paragraphs (h)(1)(iii) and (h)(1)(iv) of this section. The center point of impact shall be that structural member of the protective frame likely to hit the ground first in a sideways accidental upset. The side impact shall be applied to the side opposite that used for rear impact.

(i) *Performance requirements.* (1) *General.* (i) The frame, overhead weather shield, fenders, or other parts in the operator area may be deformed in these tests, but shall not shatter or leave sharp edges exposed to the operator, or violate the dimensions shown in Figures W–16 and W–17, and specified as follows:

$D$ = 2 in. (51 mm) inside of the frame upright to the vertical centerline of the seat;
$E$ = 30 in. (762 mm);
$F$ = Not less than 0 in. (0 mm) and not more than 12 in. (305 mm), measured at the centerline of the seat backrest to the crossbar along the line of load application as shown in Figure W–17; and
$G$ = 24 in. (610 mm).

(ii) The material and design combination used in the protective structure must be such that the structure can meet all prescribed performance tests at 0 °F (−18 °C) according to 29 CFR 1926.1001(f)(2)(iv).

(2) *Vehicle overturn performance requirements.* The requirements of this paragraph (i) must be met in both side and rear overturns.

(3) *Static test performance requirements.* Design factors shall be incorporated in each design to withstand an overturn test as specified by this paragraph (i). The structural requirements will be met generally when *FER* is greater than 1.0 and *FSB* is greater than *K*–1 in both side and rear loadings.

(4) *Dynamic test performance requirements.* Design factors shall be incorporated in each design to withstand the overturn test specified by this paragraph (i). The structural requirements will be met generally when the dimensions in this paragraph (i) are used during both side and rear loads.

(j) *Definitions applicable to this section.* (1) ''Agricultural tractor'' means a wheel-type vehicle of more than 20 engine horsepower, used in construction work, that is designed to furnish the power to pull, propel, or drive implements. (SAE standard J333a–1970 (''Operator protection for wheel-type agricultural and industrial tractors'') defines ''agricultural tractor'' as a ''wheel-type vehicle of more than 20 engine horsepower designed to furnish the power to pull, carry, propel, or drive implements that are designed for agricultural usage.'' Since this part 1926 applies only to construction work, the SAE definition of ''agricultural tractor'' is adopted for purposes of this subpart.)

(2) ''Industrial tractor'' means that class of wheel-type tractors of more than 20 engine horsepower (other than rubber-tired loaders and dozers described in 29 CFR 1926.1001), used in operations such as landscaping, construction services, loading, digging, grounds keeping, and highway maintenance.

(3) The following symbols, terms, and explanations apply to this section:

$E_{is}$ = Energy input to be absorbed during side loading in ft-lb ($E'_{is}$ in J [joules]);
$E_{is} = 723 + 0.4\ W$ ft-lb ($E'_{is} = 100 + 0.12\ W'$, J);
$E_{ir}$ = Energy input to be absorbed during rear loading in ft-lb ($E'_{ir}$ in J);
$E_{ir} = 0.47\ W$ ft-lb ($E'_{ir} = 0.14\ W'$, J);
$W$ = Tractor weight as specified by 29 CFR 1926.1002(e)(1) and (e)(3), in lb ($W'$, kg);
$L$ = Static load, lb (kg);
$D$ = Deflection under $L$, in. (mm);
$L$–$D$ = Static load-deflection diagram;
$L_m$–$D_m$ = Modified static load-deflection diagram (Figure W–20). To account for an increase in strength due to an increase in strain rate, raise $L$ in the plastic range $L \times K$;
$K$ = Increase in yield strength induced by higher rate of loading (1.3 for hot, rolled, low-carbon steel 1010–1030). Low carbon is preferable; however, when higher carbon or other material is used, $K$ must be determined in the laboratory. Refer to Norris, C.H., Hansen, R.J., Holley, M.J., Biggs, J.M., Namyet, S., and Minami, J.V., *Structural Design for Dynamic Loads*, McGraw-Hill, New York, 1959, p. 3;
$L_{max}$ = Maximum observed static load;
*Load Limit* = Point on a continuous $L$–$D$ curve at which the observed static load is 0.8 $L_{max}$ (refer to Figure W–19);
$E_u$ = Strain energy absorbed by the frame, ft-lb (J); area under the $L_m$–$D_m$ curve;
*FER* = Factor of energy ratio, $FER = E_u E_{is}$; also, $FER = E_u E_{ir}$;
$P_b$ = Maximum observed force in mounting connection under a static load, $L$, lb (kg);
$P_u$ = Ultimate force capacity of mounting connection, lb (kg);
*FSB* = Design margin for a mounting connection $(P_u P_b) - 1$; and
$H$ = Vertical height of lift of 4,410-lb (2,000-kg) weight, in. ($H'$, mm). The weight shall be pulled back so that the height of its center of gravity above the point of impact is defined as follows: $H = 4.92 + 0.00190\ W$ ($H' = 125 + 0.107\ W'$) (see Figure W–24).

(k) *Source of standard.* The standard in this section is derived from, and restates, in part, Society of Automotive Engineers (''SAE'') standard J334a-1970 (''Protective frame test procedures and performance requirements''). The SAE standard appears in the 1971 SAE Handbook, which may be examined at any OSHA regional office.

**§ 1926.1003 Overhead protection for operators of agricultural and industrial tractors used in construction.**

(a) *General.* (1) *Purpose.* When overhead protection is provided on wheel-type agricultural and industrial tractors, the overhead protection shall be designed and installed according to the requirements contained in this section. The provisions of 29 CFR 1926.1001 for rubber-tired dozers and rubber-tired loaders may be used instead of the standards contained in this section. The purpose of this standard is to minimize the possibility of operator injury resulting from overhead hazards such as flying and falling objects, and at the same time to minimize the possibility of operator injury from the cover itself in the event of accidental upset.

(2) *Applicability.* This standard applies to wheel-type agricultural and industrial tractors used in construction work (see 29 CFR 1926.1002(b) and (j)). In the case of machines to which 29 CFR 1926.604 (relating to site clearing) also applies, the overhead protection may be either the type of protection provided in 29 CFR 1926.604, or the type of protection provided by this section.

(b) *Overhead protection.* When overhead protection is installed on wheel-type agricultural or industrial tractors used in construction work, it shall meet the requirements of this paragraph. The overhead protection may be constructed of a solid material. When grid or mesh is used, the largest permissible opening shall be such that

the maximum circle that can be inscribed between the elements of the grid or mesh is 1.5 in. (38 mm) in diameter. The overhead protection shall not be installed in such a way as to become a hazard in the case of upset.

(c) *Test procedures—general.* (1) The requirements of 29 CFR 1926.1002(d), (e), and (f) shall be met.

(2) Static and dynamic rear load application shall be distributed uniformly along a maximum projected dimension of 27 in. (686 mm), and a maximum area of 160 sq. in. (1,032 sq. cm), normal to the direction of load application. The load shall be applied to the upper extremity of the frame at the point that is midway between the centerline of the seat and the inside of the frame upright.

(3) The static and dynamic side load application shall be distributed uniformly along a maximum projected dimension of 27 in. (686 mm), and a maximum area of 160 sq. in. (1,032 sq. cm), normal to the direction of load application. The direction of load application is the same as in 29 CFR 1926.1002 (g) and (h). To simulate the characteristics of the structure during an upset, the center of load application may be located from a point 24 in. (610 mm) (*K*) forward to 12 in. (305 mm) (*L*) rearward of the front of the seat backrest, to best use the structural strength (see Figure W–25).

(d) *Drop test procedures.* (1) The same frame shall be subjected to the drop test following either the static or dynamic test.

(2) A solid steel sphere or material of equivalent spherical dimension weighing 100 lb (45.4 kg) shall be dropped once from a height 10 ft (3.08 m) above the overhead cover.

(3) The point of impact shall be on the overhead cover at a point within the zone of protection as shown in Figure W–26, which is furthest removed from major structural members.

(e) *Crush test procedure.* (1) The same frame shall be subjected to the crush test following the drop test and static or dynamic test.

(2) The test load shall be applied as shown in Figure W–27, with the seat positioned as specified in 29 CFR 1926.1002(d)(4). Loading cylinders shall be mounted pivotally at both ends. Loads applied by each cylinder shall be equal within two percent, and the sum of the loads of the two cylinders shall be two times the tractor weight as set forth in 29 CFR 1926.1002(e)(1). The maximum width of the beam illustrated in Figure W–27 shall be 6 in. (152 mm).

(f) *Performance requirements.* (1) *General.* The performance requirements set forth in 29 CFR 1926.1002(i)(2), (3), and (4) shall be met.

(2) *Drop test performance requirements.* (i) Instantaneous deformation due to impact of the sphere shall not enter the protected zone as illustrated in Figures W–25, W–26, and W–28.

(ii) In addition to the dimensions set forth in 29 CFR 1926.1002(i)(1)(i), the following dimensions apply to Figure W–28:

*H* = 17.5 in. (444 mm); and

*J* = 2 in. (50.8 mm), measured from the outer periphery of the steering wheel.

(3) *Crush test performance requirements.* The protected zone as described in Figure W–28 must not be violated.

(g) *Source of standard.* This standard is derived from, and restates, in part, the portions of Society of Automotive Engineers (''SAE'') standard J167–1970 (''Protective frame with overhead protection—test procedures and performance requirements''), which pertain to overhead protection requirements. The SAE standard appears in the 1971 SAE Handbook, which may be examined at any OSHA regional office.

## Appendix A to Subpart W—Figures W–14 through W–28

BILLING CODE 4510–26–P

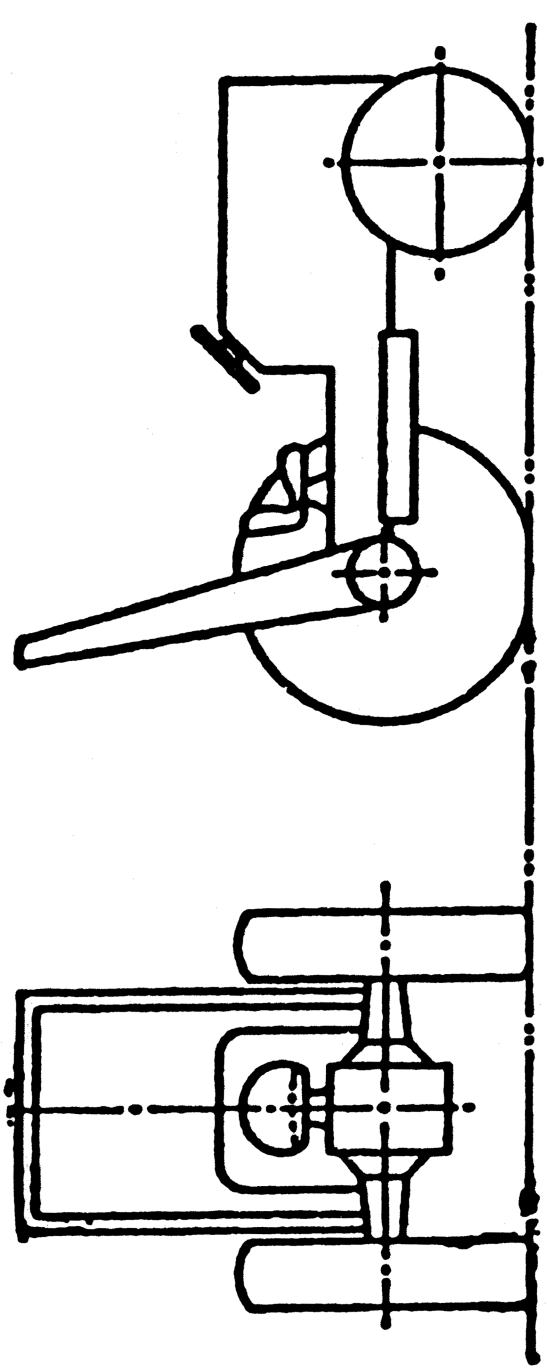

FIGURE W-14—Typical frame configuration.

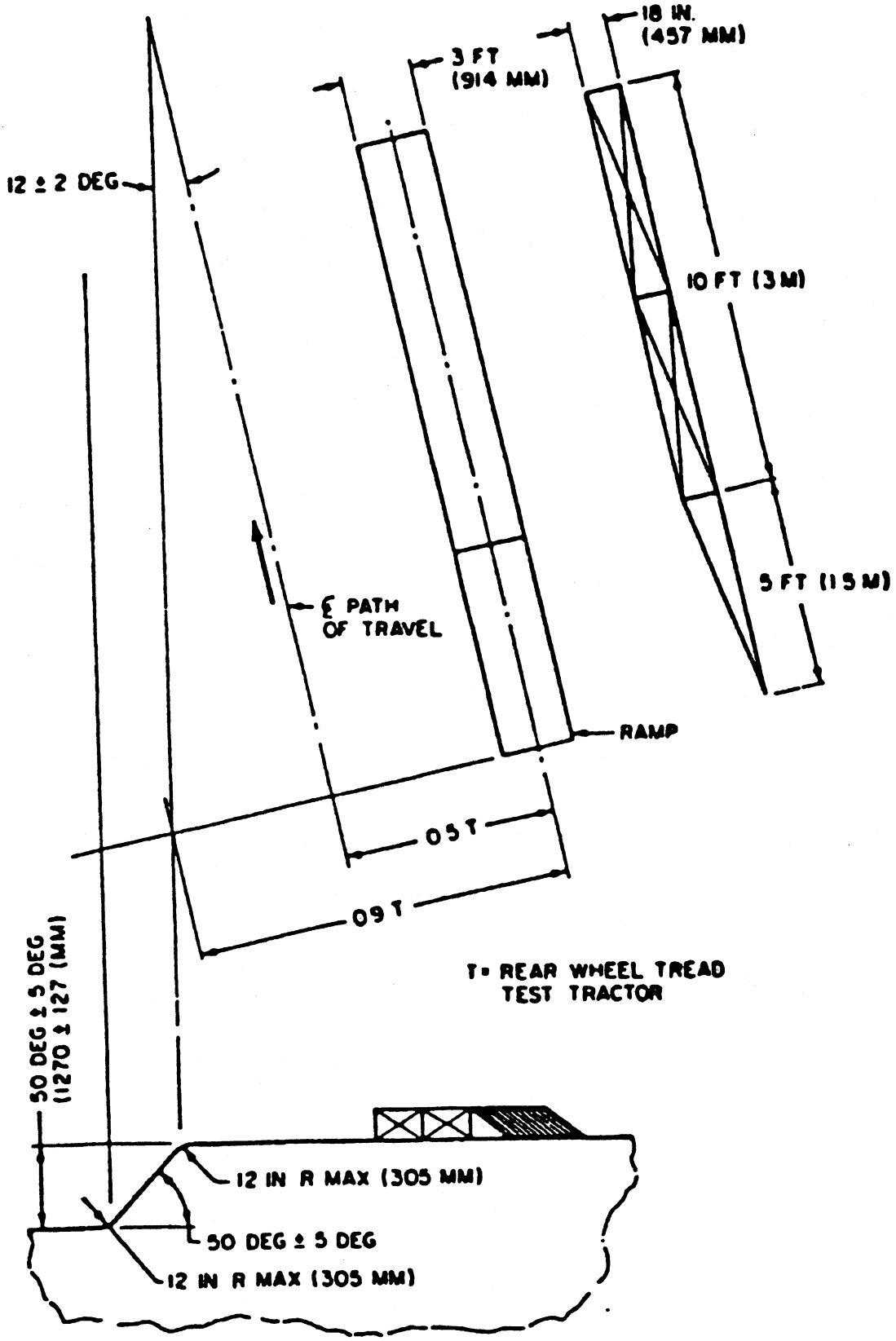
18 IN.
(457 MM)
3 FT
(914 MM)
12 ± 2 DEG
10 FT (3 M)
5 FT (1.5 M)
℄ PATH
OF TRAVEL
RAMP
0.5 T
0.9 T
T = REAR WHEEL TREAD
TEST TRACTOR
50 DEG ± 5 DEG
(1270 ± 127 (MM)
12 IN R MAX (305 MM)
50 DEG ± 5 DEG
12 IN R MAX (305 MM)

FIGURE W–15.

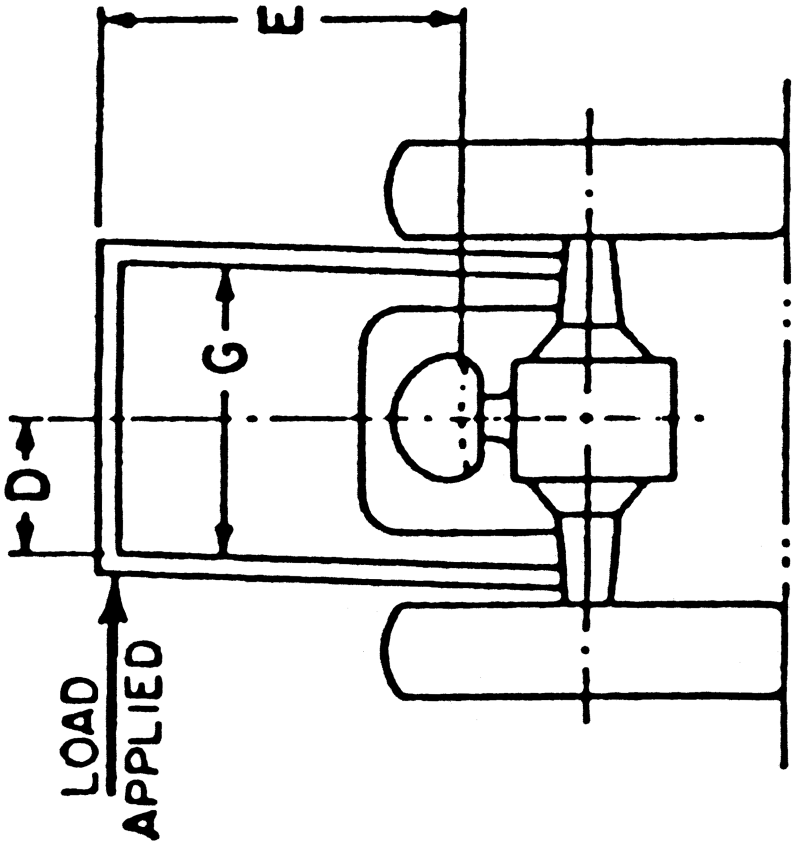


FIGURE W-16—Side load application.

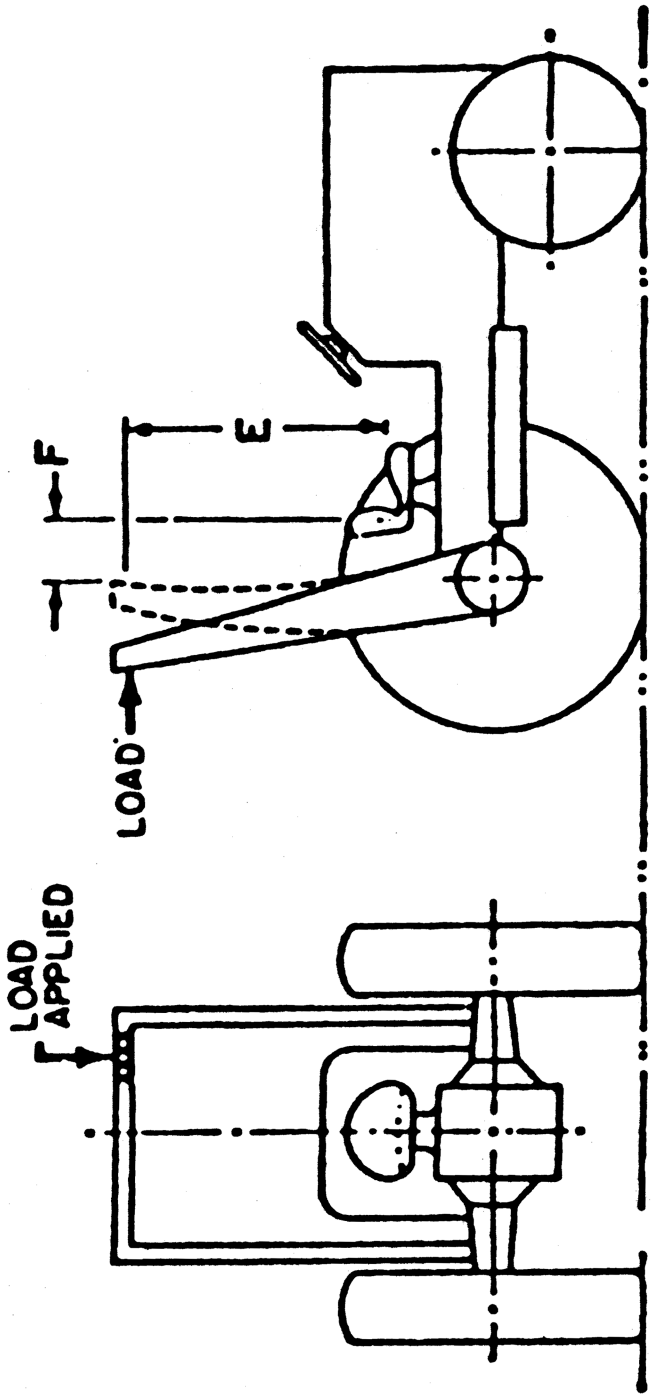


FIGURE W-17—Rear load application.

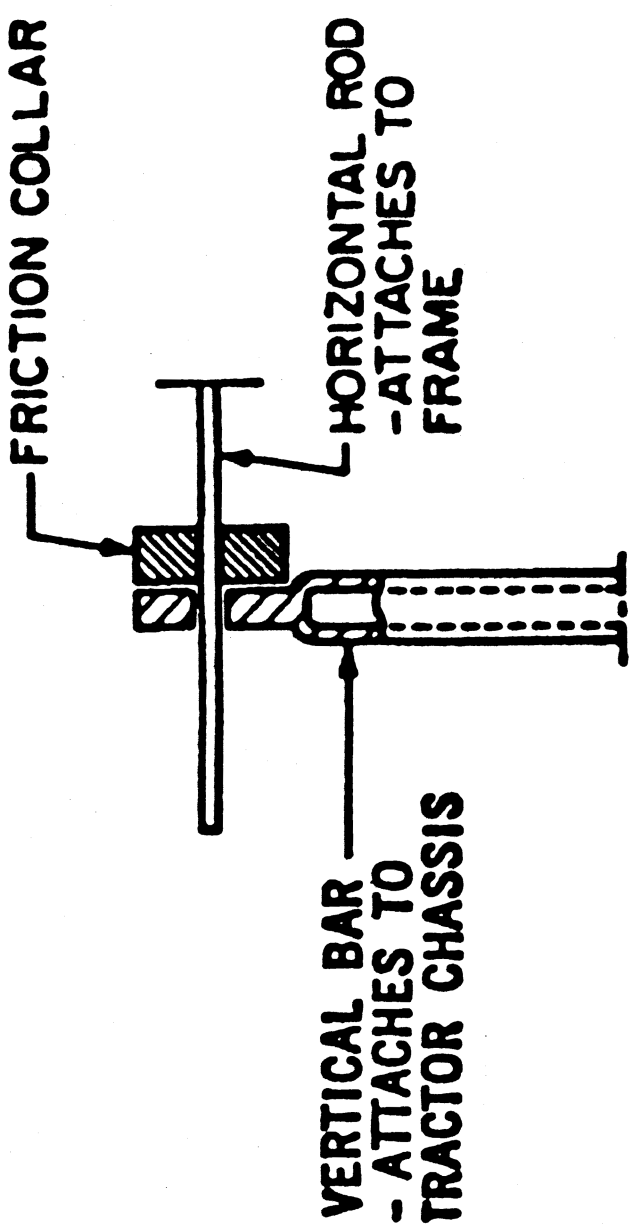


FIGURE W-18—Method of measuring instantaneous deflection.

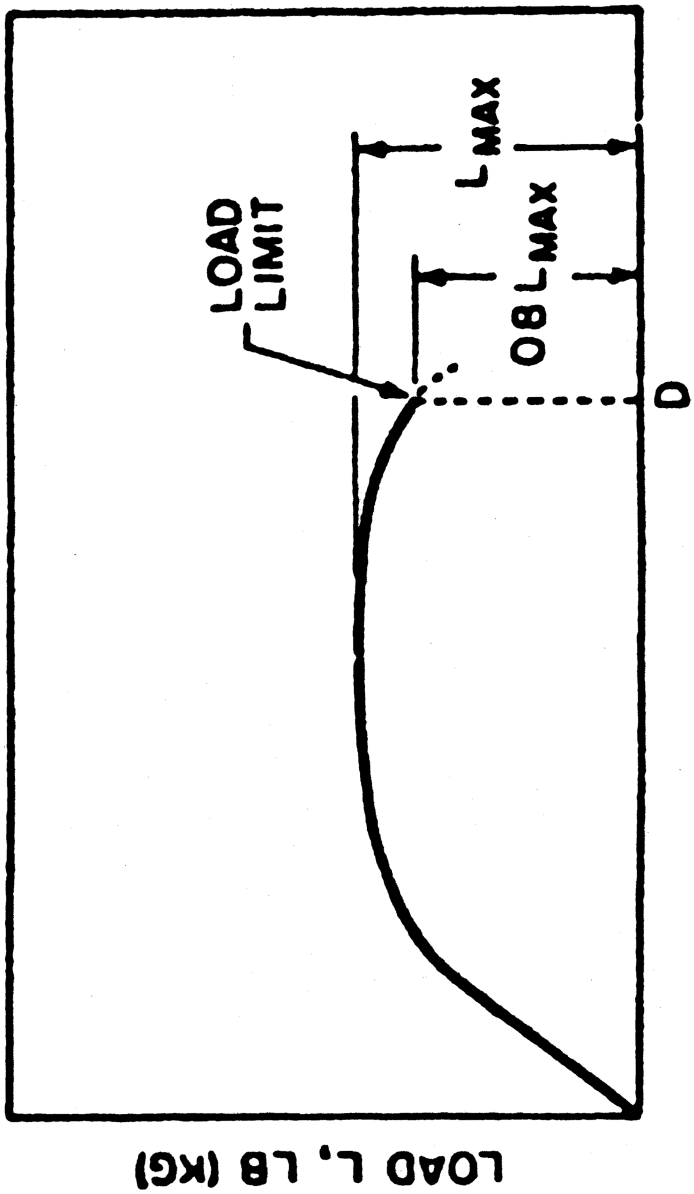


**FIGURE W–18—Typical L–D diagram**

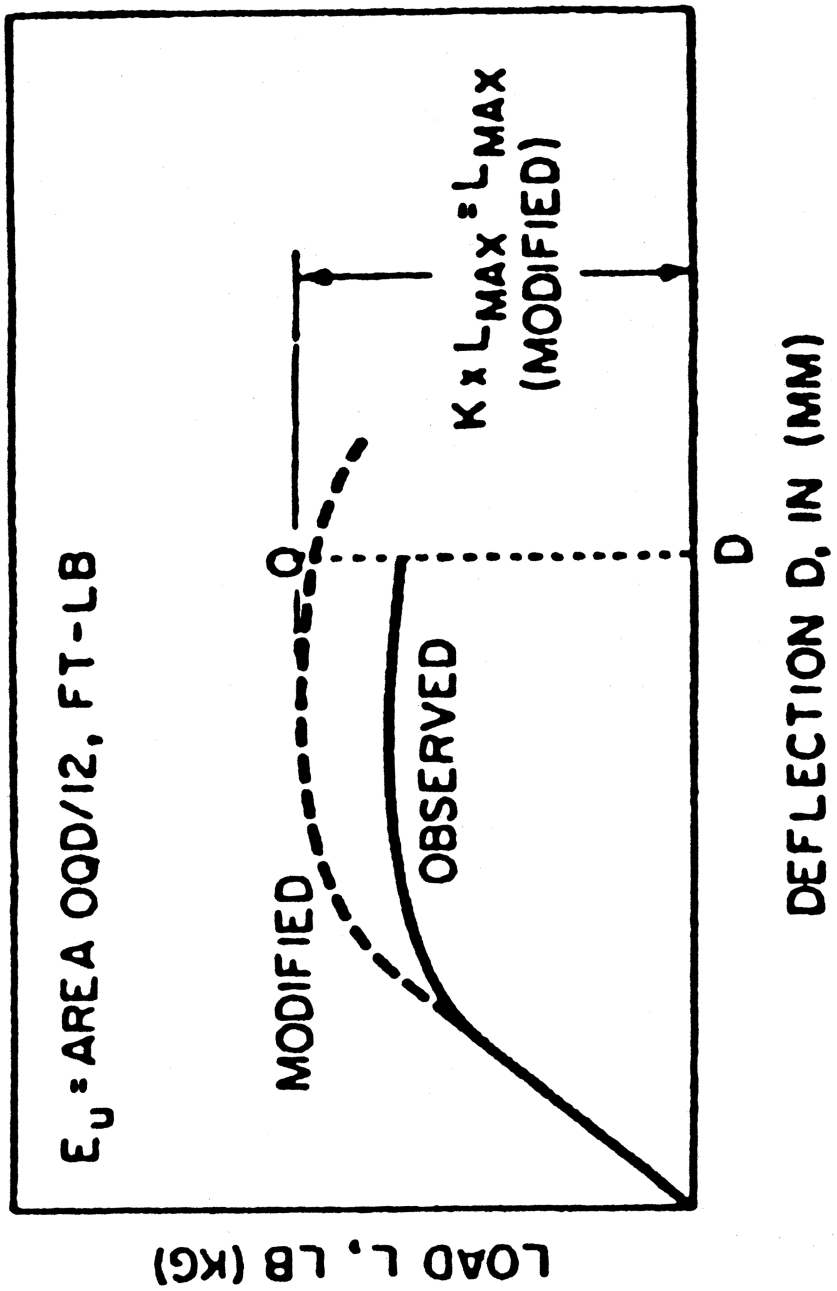


**FIGURE W–20—Typical modified $L_m$–D diagram.**

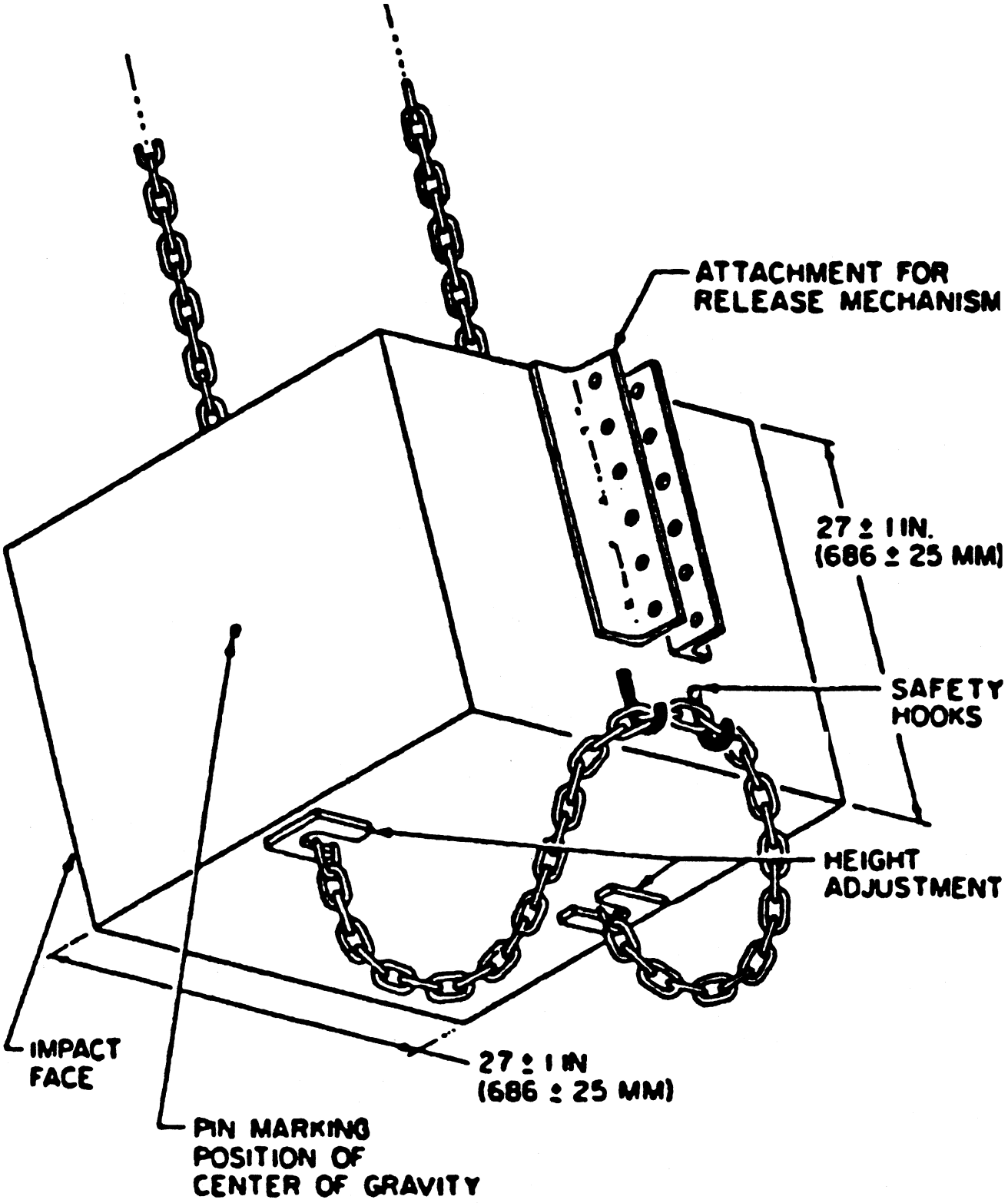


**FIGURE W–21—Pendulum.**

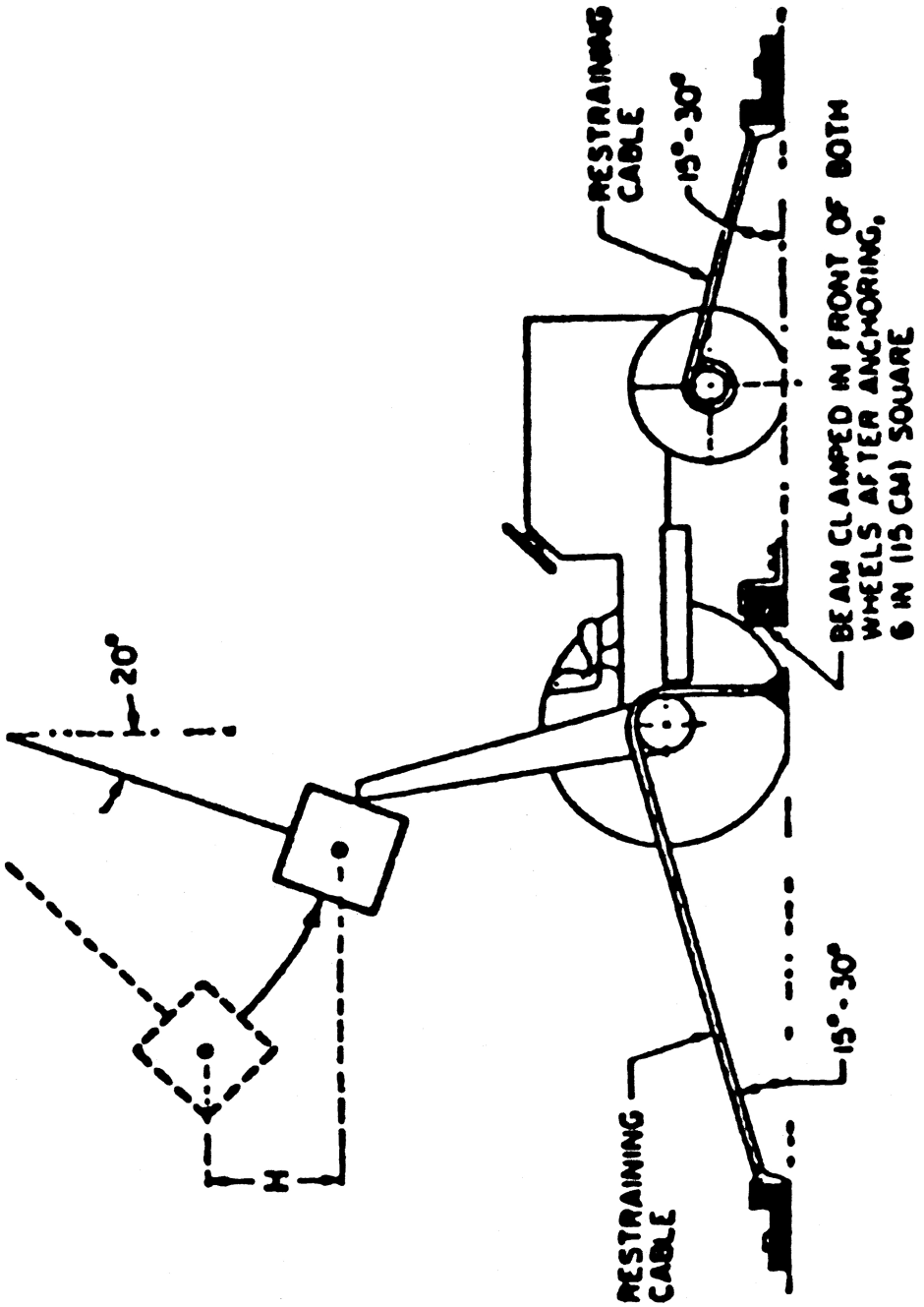


FIGURE W-22—Method of Impact from rear

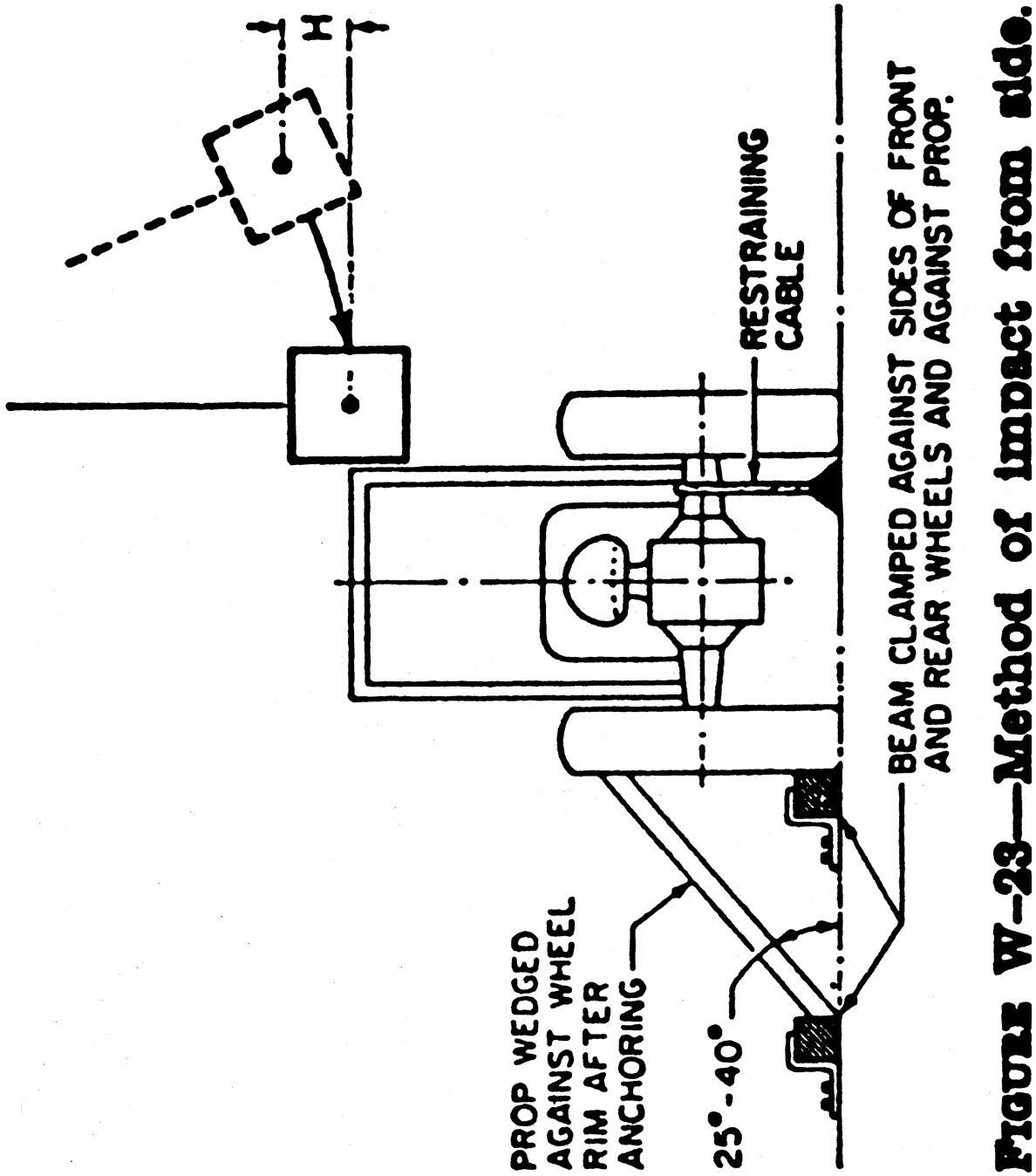


**FIGURE W-23—Method of impact from side.**

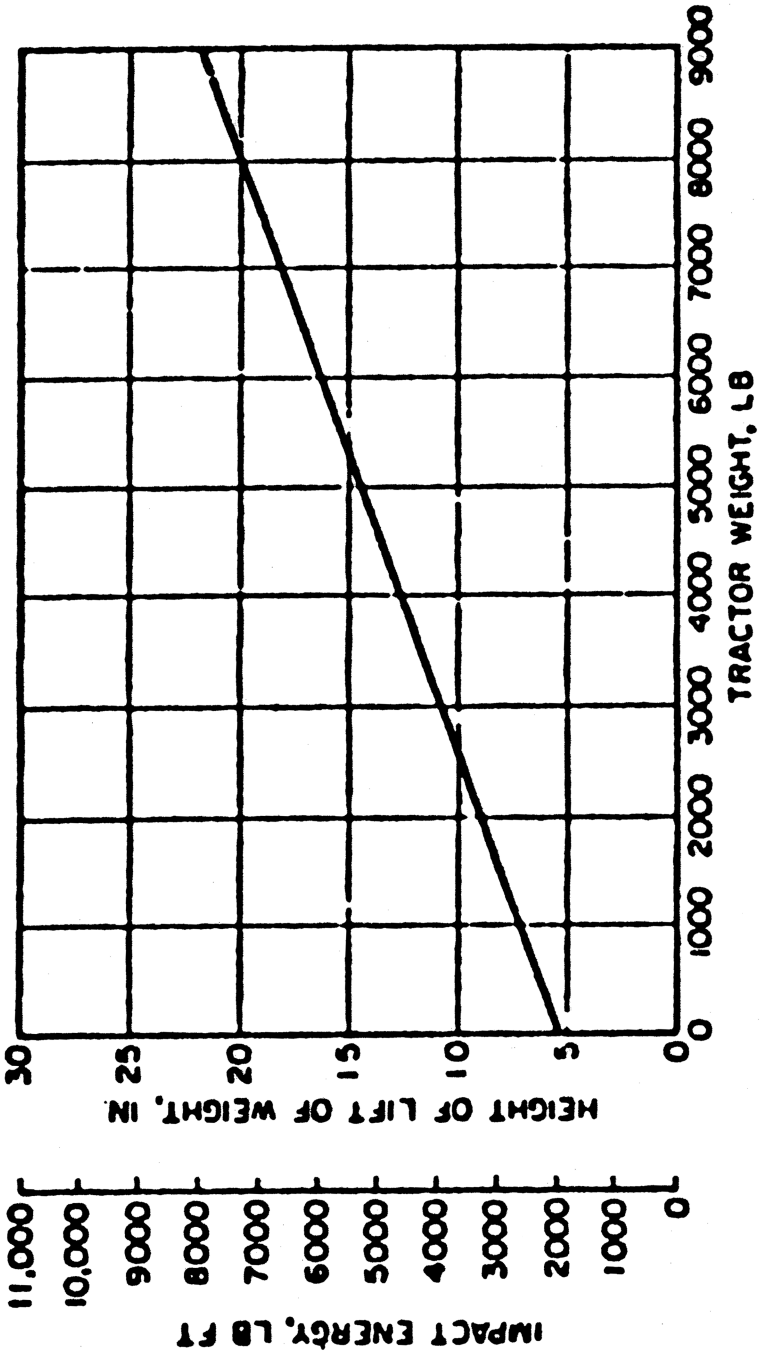


NOTATION OF FORMULAE

H = 4.92 + .00019 W OR (H' = .125 + 0.107 W')

W = TRACTOR WEIGHT AS DEFINED IN PARAGRAPH 3.3 IN POUNDS (W' IN KG)

FIGURE W–24—Impact energy and corresponding lift height of 4,410 lb. (2,000 kg.) weight.

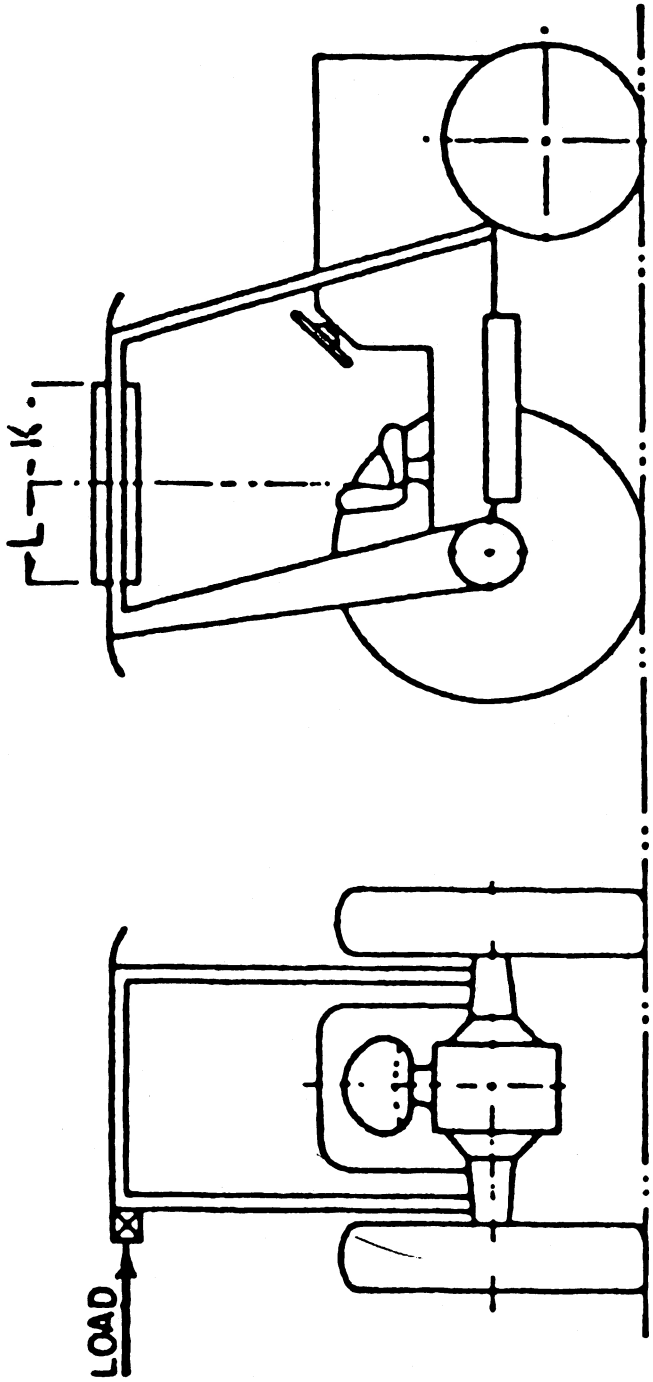


FIGURE W–25—Location for side load.

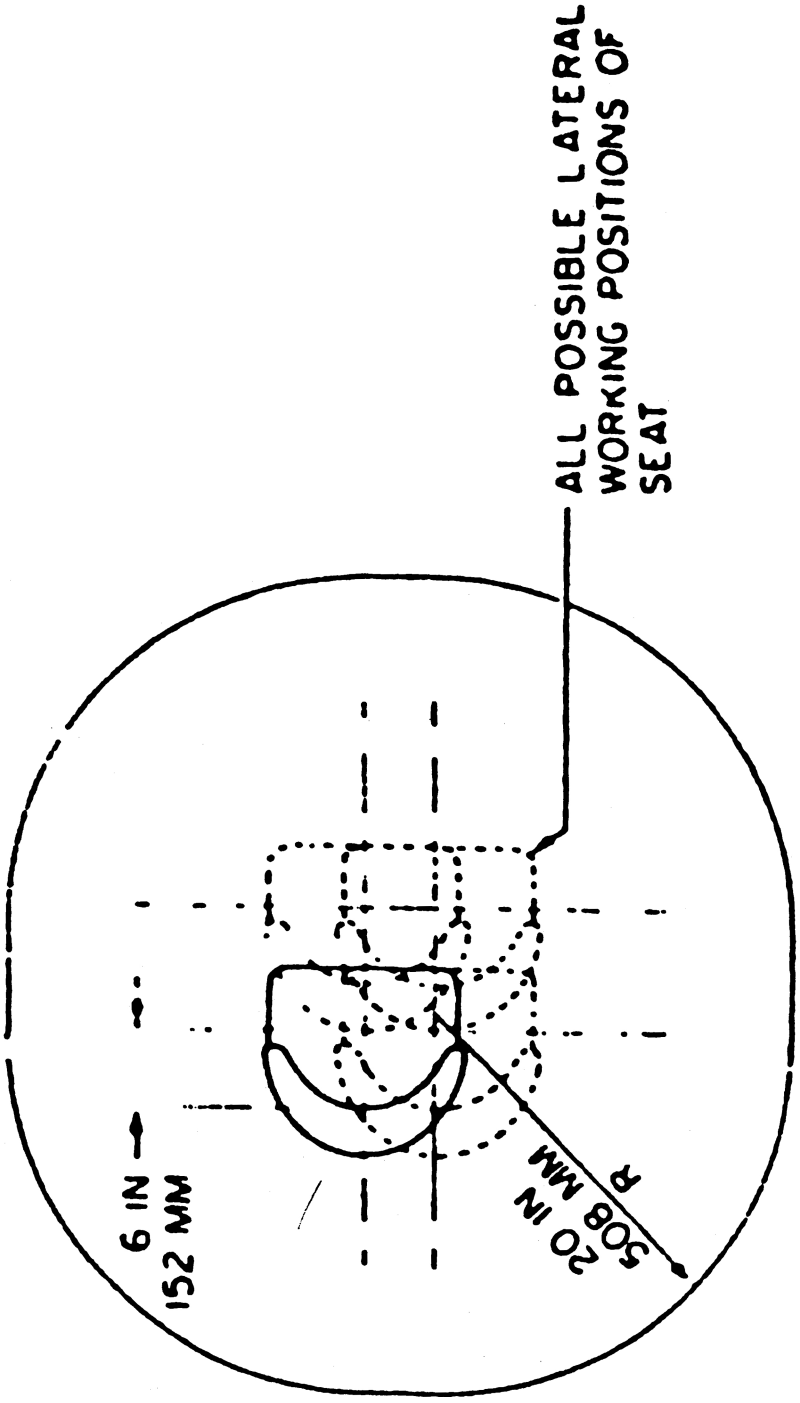


FIGURE W–26—Zone of protection for drop test.

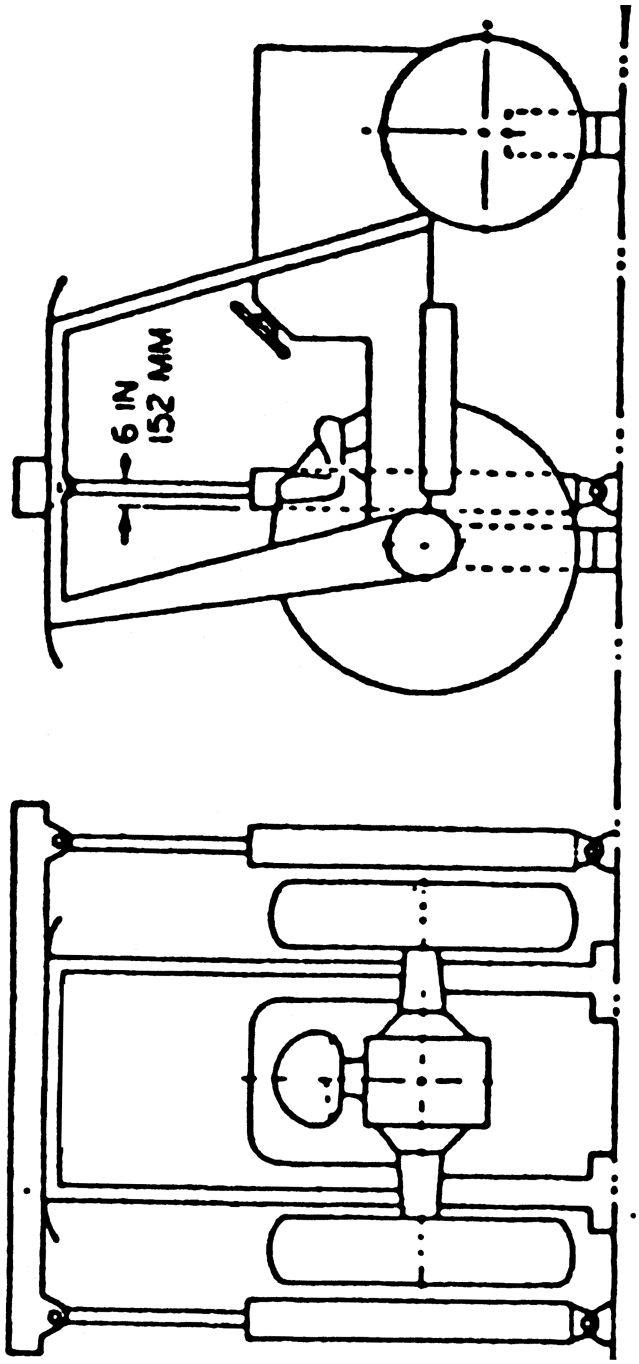


FIGURE W–27—Method of load application for crush test.

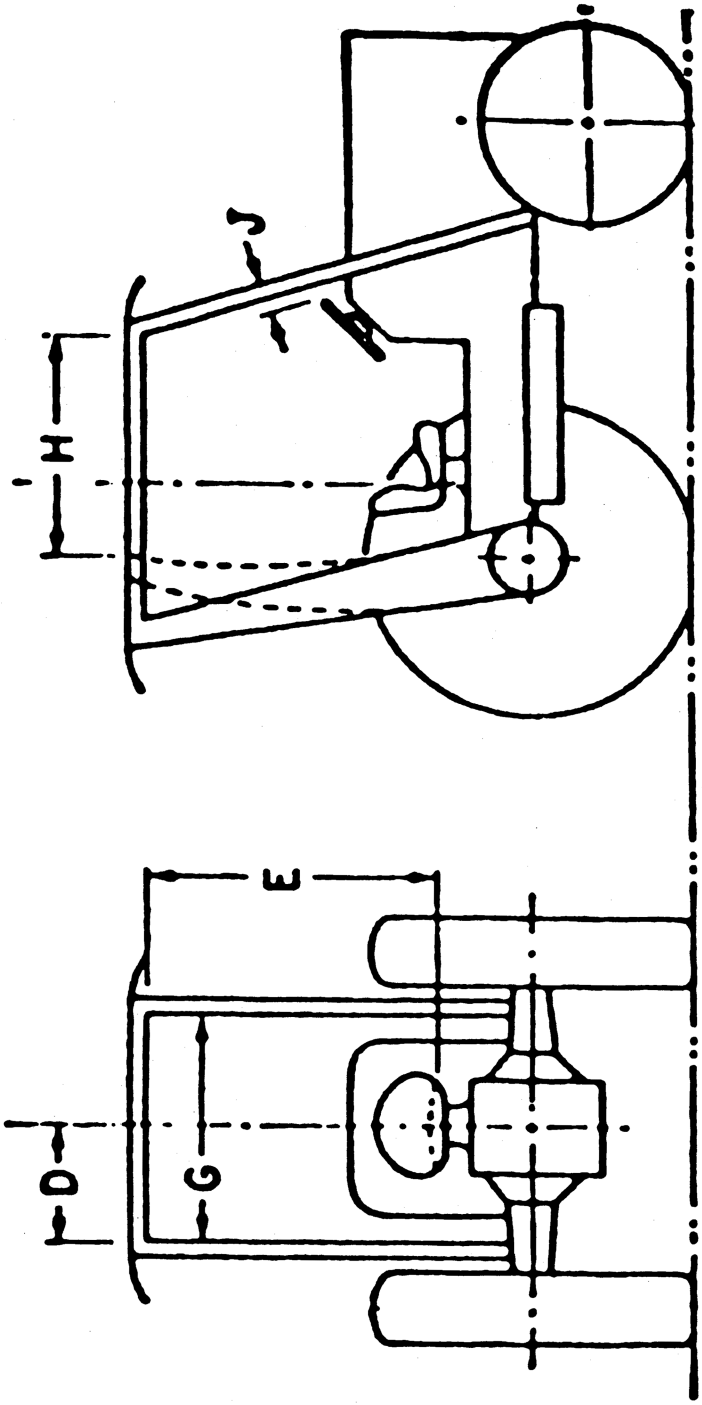


FIGURE W–28—Protected zone during crush and drop tests.

BILLING CODE 4510–26–C

## PART 1928—[AMENDED]

### Subpart C—[Amended]

■ 3. Revise the authority citation to part 1928 to read as follows:

**Authority:** Sections 4, 6, and 8 of the Occupational Safety and Health Act of 1970 (29 U.S.C. 653, 655, 657); and Secretary of Labor's Order No. 12–71 (36 FR 8754), 8–76 (41 FR 25059), 9–83 (48 FR 35736), 1–90 (55 FR 9033), 6–96 (62 FR 111), 3–2000 (65 FR 50017) or 5–2002 (67 FR 65008) as applicable; and 29 CFR part 1911.

Section 1928.21 also issued under section 29, Hazardous Materials Transportation Uniform Safety Act of 1990 (Pub. L. 101–615, 104 Stat. 3244 (49 U.S.C. 1801–1819 and 5 U.S.C. 553)).

■ 4. Revise paragraph (b)(1) of § 1928.51 to read as follows:

**§ 1928.51 Roll-over protective structures (ROPS) for tractors used in agricultural operations.**

* * * * *

(b) * * *

(1) *Roll-over protective structures (ROPS).* ROPS shall be provided by the employer for each tractor operated by an employee. Except as provided in paragraph (b)(5) of this section, a ROPS used on wheel-type tractors shall meet the test and performance requirements of 29 CFR 1928.52, 1928.53, or 1926.1002 as appropriate. A ROPS used on track-type tractors shall meet the test

and performance requirements of 29 CFR 1926.1001.

* * * * *

■ 5. Add §§ 1928.52, 1928.53, and a new Appendix B to subpart C to read as follows:

**§ 1928.52 Protective frames for wheel-type agricultural tractors—test procedures and performance requirements.**

(a) *Purpose.* The purpose of this section is to establish the test and performance requirements for a protective frame designed for wheel-type agricultural tractors to minimize the frequency and severity of operator injury resulting from accidental upsets. General requirements for the protection of operators are specified in 29 CFR 1928.51.

(b) *Types of tests.* All protective frames for wheel-type agricultural tractors shall be of a model that has been tested as follows:

(1) *Laboratory test.* A laboratory energy-absorption test, either static or dynamic, under repeatable and controlled loading, to permit analysis of the protective frame for compliance with the performance requirements of this standard.

(2) *Field-upset test.* A field-upset test under controlled conditions, both to the side and rear, to verify the effectiveness of the protective system under actual dynamic conditions. Such testing may be omitted when:

(i) The analysis of the protective-frame static-energy absorption test results indicates that both $FER_{is}$ and $FER_{ir}$ (as defined in paragraph (d)(2)(ii) of this section) exceed 1.15; or

(ii) The analysis of the protective-frame dynamic-energy absorption test results indicates that the frame can withstand an impact of 15 percent greater than the impact it is required to withstand for the tractor weight as shown in Figure C–7.

(c) *Descriptions.* (1) *Protective frame.* A protective frame is a structure comprised of uprights mounted to the tractor, extending above the operator's seat. A typical two-post frame is shown in Figure C–1.

(2) *Overhead weather shield.* When an overhead weather shield is available for attachment to the protective frame, it may be in place during tests provided it does not contribute to the strength of the protective frame.

(3) *Overhead falling object protection.* When an overhead falling-object protection device is available for attachment to the protective frame, it may be in place during tests provided it does not contribute to the strength of the protective frame.

(d) *Test procedures.* (1) *General.* (i) The tractor weight used shall be that of the heaviest tractor model on which the protective frame is to be used.

(ii) Each test required under this section shall be performed on a new protective frame. Mounting connections of the same design shall be used during each such test.

(iii) Instantaneous deflection shall be measured and recorded for each segment of the test; see paragraph (e)(1)(i) of this section for permissible deflections.

(iv) The seat-reference point (''*SRP*'') in Figure C–3 is that point where the vertical line that is tangent to the most forward point at the longitudinal seat centerline of the seat back, and the horizontal line that is tangent to the highest point of the seat cushion, intersect in the longitudinal seat section. The seat-reference point shall be determined with the seat unloaded and adjusted to the highest and most rearward position provided for seated operation of the tractor.

(v) When the centerline of the seat is off the longitudinal center, the frame loading shall be on the side with the least space between the centerline of seat and the protective frame.

(vi) Low-temperature characteristics of the protective frame or its material shall be demonstrated as specified in paragraph (e)(1)(ii) of this section.

(vii) Rear input energy tests (static, dynamic, or field-upset) need not be performed on frames mounted to tractors having four driven wheels and more than one-half their unballasted weight on the front wheels.

(viii) Accuracy table:

| Measurements | Accuracy |
|---|---|
| Deflection of the frame, in. (mm) | ±5 percent of the deflection measured. |
| Vertical weight, lb (kg) | ±5 percent of the weight measured. |
| Force applied to the frame, pounds force (newtons) | ±5 percent of the force measured. |
| Dimensions of the critical zone, in. (mm) | ±0.5 in. (12.5 mm). |

(2) *Static test procedure.* (i) The following test conditions shall be met:

(A) The laboratory mounting base shall be the tractor chassis for which the protective frame is designed, or its equivalent;

(B) The protective frame shall be instrumented with the necessary equipment to obtain the required load-deflection data at the locations and directions specified in Figures C–2 and C–3; and

(C) When the protective frame is of a one- or two-upright design, mounting connections shall be instrumented with the necessary equipment to record the required force to be used in paragraph (d)(2)(iii)(E) and (J) of this section. Instrumentation shall be placed on mounting connections before installation load is applied.

(ii) The following definitions shall apply:

$W$ = Tractor weight (see 29 CFR 1928.51(a)) in lb ($W'$ in kg);

$E_{is}$ = Energy input to be absorbed during side loading in ft-lb ($E'_{is}$ in J [joules]);

$E_{is} = 723 + 0.4\ W$ ($E'_{is} = 100 + 0.12\ W'$);

$E_{ir}$ = Energy input to be absorbed during rear loading in ft-lb ($E'_{ir}$ in J);

$E_{ir} = 0.47\ W$ ($E'_{ir} = 0.14\ W'$);

$L$ = Static load, lbf [pounds force], (N) [newtons];

$D$ = Deflection under $L$, in. (mm);

$L$–$D$ = Static load-deflection diagram;

$L_{max}$ = Maximum observed static load;

*Load Limit* = Point on a continuous $L$–$D$ curve where the observed static load is 0.8 $L_{max}$ on the down slope of the curve (see Figure C–5);

$E_u$ = Strain energy absorbed by the frame in ft-lb (J); area under the $L$–$D$ curve;

$FER$ = Factor of energy ratio;

$FER_{is} = E_u E_{is}$;

$FER_{ir} = E_u E_{ir}$;

$P_b$ = Maximum observed force in mounting connection under a static load, $L$ lbf (N);

$P_u$ = Ultimate force capacity of a mounting connection, lbf (N);

$FSB$ = Design margin for a mounting connection; and

$FSB = P_u/P_b$

(iii) The test procedures shall be as follows:

(A) Apply the rear load according to Figure C–3, and record $L$ and $D$ simultaneously. Rear-load application shall be distributed uniformly on the frame over an area perpendicular to the direction of load application, no greater than 160 sq. in. (1,032 sq. cm) in size, with the largest dimension no greater than 27 in. (686 mm). The load shall be applied to the upper extremity of the frame at the point that is midway between the center of the frame and the

inside of the frame upright. When no structural cross member exists at the rear of the frame, a substitute test beam that does not add strength to the frame may be used to complete this test procedure. The test shall be stopped when:

*(1)* The strain energy absorbed by the frame is equal to or greater than the required input energy $E_{ir}$; or

*(2)* Deflection of the frame exceeds the allowable deflection (see paragraph (e)(1)(i) of this section); or

*(3)* Frame load limit occurs before the allowable deflection is reached in rear load (see Figure C–5).

(B) Using data obtained under paragraph (d)(2)(iii)(A) of this section, construct the *L–D* diagram shown in Figure C–5;

(C) Calculate $E_{ir}$;

(D) Calculate $FER_{ir}$;

(E) Calculate *FSB* as required by paragraph (d)(2)(i)(C) of this section;

(F) Apply the side-load tests on the same frame, and record *L* and *D* simultaneously. Side-load application shall be at the upper extremity of the frame at a 90° angle to the centerline of the vehicle. The side load shall be applied to the longitudinal side farthest from the point of rear-load application. Apply side load *L* as shown in Figure C–2. The test shall be stopped when:

*(1)* The strain energy absorbed by the frame is equal to or greater than the required input energy $E_{is}$; or

*(2)* Deflection of the frame exceeds the allowable deflection (see paragraph (e)(1)(i) of this section); or

*(3)* Frame load limit occurs before the allowable deflection is reached in side load (see Figure C–5).

(G) Using data obtained in paragraph (d)(2)(iii)(F) of this section, construct the *L–D* diagram as shown in Figure C–5;

(H) Calculate $E_{is}$;

(I) Calculate $FER_{is}$; and

(J) Calculate *FSB* as required by paragraph (d)(2)(i)(C) of this section.

(3) *Dynamic test procedure.* (i) The following test conditions shall be met:

(A) The protective frame and tractor shall be tested at the weight defined by 29 CFR 1928.51(a);

(B) The dynamic loading shall be accomplished by using a 4,410-lb (2,000-kg) weight acting as a pendulum. The impact face of the weight shall be 27 ± 1 in. by 27 ± 1 in. (686 ± 25 mm by 686 ± 25 mm), and shall be constructed so that its center of gravity is within 1.0 in. (25.4 mm) of its geometric center. The weight shall be suspended from a pivot point 18 to 22 ft (5.5 to 6.7 m) above the point of impact on the frame, and shall be conveniently and safely adjustable for height (see Figure C–6);

(C) For each phase of testing, the tractor shall be restrained from moving when the dynamic load is applied. The restraining members shall have strength no less than, and elasticity no greater than, that of 0.50-in. (12.7-mm) steel cable. Points of attachment for the restraining members shall be located an appropriate distance behind the rear axle and in front of the front axle to provide a 15° to 30° angle between a restraining cable and the horizontal. For impact from the rear, the restraining cables shall be located in the plane in which the center of gravity of the pendulum will swing, or alternatively, two sets of symmetrically located cables may be used at lateral locations on the tractor. For impact from the side, restraining cables shall be used as shown in Figures C–8 and C–9;

(D) The front and rear wheel-tread settings, when adjustable, shall be at the position nearest to halfway between the minimum and maximum settings obtainable on the vehicle. When only two settings are obtainable, the minimum setting shall be used. The tires shall have no liquid ballast, and shall be inflated to the maximum operating pressure recommended by the manufacturer. With the specified tire inflation, the restraining cable shall be tightened to provide tire deflection of 6 to 8 percent of the nominal tire-section width. After the vehicle is restrained properly, a wooden beam no less than 6-in. x 6-in. (150-mm x 150-mm) in cross section shall be driven tightly against the appropriate wheels and clamped. For the test to the side, an additional wooden beam shall be placed as a prop against the wheel nearest to the operator's station, and shall be secured to the base so that it is held tightly against the wheel rim during impact. The length of this beam shall be chosen so that it is at an angle of 25° to 40° to the horizontal when it is positioned against the wheel rim. It shall have a length 20 to 25 times its depth, and a width two to three times its depth (see Figures C–8 and C–9);

(E) Means shall be provided for indicating the maximum instantaneous deflection along the line of impact. A simple friction device is illustrated in Figure C–4;

(F) No repairs or adjustments shall be made during the test; and

(G) When any cables, props, or blocking shift or break during the test, the test shall be repeated.

(ii) $H$ = Vertical height of the center of gravity of a 4,410-lb (2,000-kg) weight in in. ($H'$ in mm). The weight shall be pulled back so that the height of its center of gravity above the point of impact is: $H = 4.92 + 0.00190\ W$ ($H' = 125 \pm 0.170\ W'$) (see Figure C–7).

(iii) The test procedures shall be as follows:

(A) The frame shall be evaluated by imposing dynamic loading from the rear, followed by a load to the side on the same frame. The pendulum swinging from the height determined by paragraph (d)(3)(ii) of this section shall be used to impose the dynamic load. The position of the pendulum shall be so selected that the initial point of impact on the frame is in line with the arc of travel of the center of gravity of the pendulum. When a quick-release mechanism is used, it shall not influence the attitude of the block;

(B) *Impact at rear.* The tractor shall be restrained properly according to paragraphs (d)(3)(i)(C) and (d)(3)(i)(D) of this section. The tractor shall be positioned with respect to the pivot point of the pendulum so that the pendulum is 20° from the vertical prior to impact as shown in Figure C–8. The impact shall be applied to the upper extremity of the frame at the point that is midway between the centerline of the frame and the inside of the frame upright. When no structural cross member exists at the rear of the frame, a substitute test beam that does not add to the strength of the frame may be used to complete the test procedure; and

(C) *Impact at side.* The blocking and restraining shall conform to paragraphs (d)(3)(i)(C) and (d)(3)(i)(D) of this section. The center point of impact shall be at the upper extremity of the frame at a point most likely to hit the ground first, and at a 90° to the centerline of the vehicle (see Figure C–9). The side impact shall be applied to the longitudinal side farthest from the point of rear impact.

(4) *Field-upset test procedure.* (i) The following test conditions shall be met:

(A) The tractor shall be tested at the weight defined in 29 CFR 1928.51(a);

(B) The following provisions address soil bank test conditions.

(1) The test shall be conducted on a dry, firm soil bank. The soil in the impact area shall have an average cone index in the 0-in. to 6-in. (0-mm to 152-mm) layer of not less than 150. Cone index shall be determined according to American Society of Agricultural Engineers (''ASAE'') recommendation ASAE R313.1–1971 (''Soil cone penetrometer''), as reconfirmed in 1975, which is incorporated by reference. The incorporation by reference was approved by the Director of the Federal Register in accordance with 5 U.S.C. 552(a) and 1 CFR part 51. The path of vehicle travel shall be 12° ± 2° to the top edge of the bank.

(2) ASAE recommendation R313.1–1971, as reconfirmed in 1975, appears in the 1977 Agricultural Engineers Yearbook, or it may be examined at: Any OSHA Regional Office; the OSHA Docket Office, U.S. Department of Labor, 200 Constitution Avenue, NW., Room N–2625, Washington, DC 20210 (telephone: (202) 693–2350 (TTY number: (877) 889–5627)); or the National Archives and Records Administration (''NARA''). (For information on the availability of this material at NARA, telephone (202) 741–6030 or access the NARA Web site at *http://www.archives.gov/federal_register/code_of_federal_regulations/ibr_locations.html.*) Copies may be purchased from the American Society of Agricultural Engineers, 2950 Niles Road, St. Joseph, MI 49085.

(C) An 18-in. (457-mm) high ramp (see Figure C–10) shall be used to assist in upsetting the vehicle to the side; and

(D) The front and rear wheel-tread settings, when adjustable, shall be at the position nearest to halfway between the minimum and maximum settings obtainable on the vehicle. When only two settings are obtainable, the minimum setting shall be used.

(ii) Field upsets shall be induced to the rear and side as follows:

(A) Rear upset shall be induced by engine power, with the tractor operating in gear to obtain 3 to 5 mph (4.8 to 8.0 kph) at maximum governed engine rpm by driving forward directly up a minimum slope of 60° ± 5° as shown in Figure C–11, or by an alternative equivalent means. The engine clutch may be used to aid in inducing the upset; and

(B) To induce side upset, the tractor shall be driven under its own power along the specified path of travel at a minimum speed of 10 mph (16 kph), or at maximum vehicle speed when under 10 mph (16 kph), and over the ramp as described in paragraph (d)(4)(i)(C) of this section.

(e) *Performance requirements.* (1) *General requirements.* (i) The frame, overhead weather shield, fenders, or other parts in the operator area may be deformed in these tests, but shall not shatter or leave sharp edges exposed to the operator, or encroach on the dimensions shown in Figures C–2 and C–3, and specified as follows:

*d* = 2 in. (51 mm) inside of the frame upright to the vertical centerline of the seat;

*e* = 30 in. (762 mm) at the longitudinal centerline;

*f* = Not greater than 4 in. (102 mm) to the rear edge of the crossbar, measured forward of the seat-reference point (''*SRP*'');

g = 24 in. (610 mm) minimum; and

*m* = Not greater than 12 in. (305 mm), measured from the seat-reference point to the forward edge of the crossbar.

(ii) The protective structure and connecting fasteners must pass the static or dynamic tests described in paragraphs (d)(2), (d)(3), or (d)(4) of this section at a metal temperature of 0 °F (−18 °C) or below, or exhibit Charpy V-notch impact strengths as follows:

10-mm x 10-mm (0.394-in. x 0.394-in.) specimen: 8.0 ft-lb (10.8 J) at −20 °F (−30 °C);

10-mm x 7.5-mm (0.394-in. x 0.296-in.) specimen: 7.0 ft-lb (9.5 J) at −20 °F (−30 °C);

10-mm x 5-mm (0.394-in. x 0.197-in.) specimen: 5.5 ft-lb (7.5 J) at −20 °F (−30 °C); or

10-mm x 2.5-mm (0.394-in. x 0.098-in.) specimen: 4.0 ft-lb (5.5 J) at −20 °F (−30 °C).

Specimens shall be longitudinal and taken from flat stock, tubular, or structural sections before forming or welding for use in the frame. Specimens from tubular or structural sections shall be taken from the middle of the side of greatest dimension, not to include welds.

(2) *Static test-performance requirements.* In addition to meeting the requirements of paragraph (e)(1) of this section for both side and rear loads, $FER_{is}$ and $FER_{ir}$, shall be greater than 1.0, and when the ROPS contains one or two upright frames only, *FSB* shall be greater than 1.3.

(3) *Dynamic test-performance requirements.* The structural requirements shall be met when the dimensions in paragraph (e)(1) of this section are used in both side and rear loads.

(4) *Field-upset test performance requirements.* The requirements of paragraph (e)(1) of this section shall be met for both side and rear upsets.

**§ 1928.53 Protective enclosures for wheel-type agricultural tractors—test procedures and performance requirements.**

(a) *Purpose.* The purpose of this section is to establish the test and performance requirements for a protective enclosure designed for wheel-type agricultural tractors to minimize the frequency and severity of operator injury resulting from accidental upset. General requirements for the protection of operators are specified in 29 CFR 1928.51.

(b) *Types of tests.* All protective enclosures for wheel-type agricultural tractors shall be of a model that has been tested as follows:

(1) *Laboratory test.* A laboratory energy-absorption test, either static or dynamic, under repeatable and controlled loading, to permit analysis of the protective enclosure for compliance with the performance requirements of this standard; and

(2) *Field-upset test.* A field-upset test under controlled conditions, both to the side and rear, to verify the effectiveness of the protective system under actual dynamic conditions. This test may be omitted when:

(i) The analysis of the protective-frame static-energy absorption test results indicates that both $FER_{is}$ and $FER_{ir}$ (as defined in paragraph (d)(2)(ii) of this section) exceed 1.15; or

(ii) The analysis of the protective-frame dynamic-energy absorption test results indicates that the frame can withstand an impact 15 percent greater than the impact it is required to withstand for the tractor weight as shown in Figure C–7.

(c) *Description.* A protective enclosure is a structure comprising a frame and/or enclosure mounted to the tractor. A typical enclosure is shown in Figure C–12.

(d) *Test procedures.* (1) *General.* (i) The tractor weight used shall be that of the heaviest tractor model on which the protective enclosure is to be used.

(ii) Each test required under this section shall be performed on a protective enclosure with new structural members. Mounting connections of the same design shall be used during each test.

(iii) Instantaneous deflection shall be measured and recorded for each segment of the test; see paragraph (e)(1)(i) of this section for permissible deflections.

(iv) The seat-reference point (''*SRP*'') in Figure C–14 is that point where the vertical line that is tangent to the most forward point at the longitudinal seat centerline of the seat back, and the horizontal line that is tangent to the highest point of the seat cushion, intersect in the longitudinal seat section. The seat-reference point shall be determined with the seat unloaded and adjusted to the highest and most rearward position provided for seated operations of the tractor.

(v) When the centerline of the seat is off the longitudinal center, the protective-enclosure loading shall be on the side with least space between the centerline of the seat and the protective enclosure.

(vi) Low-temperature characteristics of the protective enclosure or its material shall be demonstrated as

specified in paragraph (e)(1)(ii) of this section.

(vii) Rear input energy tests (static, dynamic, or field-upset) need not be performed on enclosures mounted to tractors having four driven wheels and more than one-half their unballasted weight on the front wheels.

(viii) Accuracy table:

| Measurements | Accuracy |
|---|---|
| Deflection of the enclosure, in. (mm) | ± 5 percent of the deflection measured. |
| Vertical weight, pounds (kg) | ± 5 percent of the weight measured. |
| Force applied to the enclosure, pounds force (newtons) | ± 5 percent of the force measured. |
| Dimensions of the critical zone, in. (mm) | ± 0.5 in. (12.5 mm). |

(ix) When movable or normally removable portions of the enclosure add to structural strength, they shall be placed in configurations that contribute least to structural strength during the test.

(2) *Static test procedure.* (i) The following test conditions shall be met:

(A) The laboratory mounting base shall be the tractor chassis for which the protective enclosure is designed, or its equivalent; and

(B) The protective enclosure shall be instrumented with the necessary equipment to obtain the required load-deflection data at the locations and directions specified in Figures C–13 and C–14.

(ii) The following definitions shall apply:

$W$ = Tractor weight (see 29 CFR 1928.31(a)) in lb ($W'$ in kg);
$E_{is}$ = Energy input to be absorbed during side loading in ft-lb ($E'_{is}$ in J [joules]);
$E_{is} = 723 + 0.4\ W$ ($E'_{is} = 100 + 0.12\ W'$);
$E_{ir}$ = Energy input to be absorbed during rear loading in ft-lb ($E'_{ir}$ in J);
$E_{ir} = 0.47\ W$ ($E'_{ir} = 0.14\ W'$);
$L$ = Static load, lbf [pounds force], (N) [newtons];
$D$ = Deflection under $L$, in. (mm);
$L$–$D$ = Static load-deflection diagram;
$L_{max}$ = Maximum observed static load;
*Load Limit* = Point on a continuous $L$–$D$ curve where the observed static load is 0.8 $L_{max}$ on the down slope of the curve (see Figure C–5);
$E_u$ = Strain energy absorbed by the protective enclosure in ft-lbs (J); area under the $L$–$D$ curve;
*FER* = Factor of energy ratio;
$FER_{is} = E_u/E_{is}$; and
$FER_{ir} = E_u/E_{ir}$

(iii) The test procedures shall be as follows:

(A) When the protective-frame structures are not an integral part of the enclosure, the direction and point of load application for both side and rear shall be the same as specified in 29 CFR 1928.52(d)(2);

(B) When the protective-frame structures are an integral part of the enclosure, apply the rear load according to Figure C–14, and record $L$ and $D$ simultaneously. Rear-load application shall be distributed uniformly on the frame structure over an area perpendicular to the load application, no greater than 160 sq. in. (1,032 sq. cm) in size, with the largest dimension no greater than 27 in. (686 mm). The load shall be applied to the upper extremity of the structure at the point that is midway between the centerline of the protective enclosure and the inside of the protective structure. When no structural cross member exists at the rear of the enclosure, a substitute test beam that does not add strength to the structure may be used to complete this test procedure. The test shall be stopped when:

*(1)* The strain energy absorbed by the structure is equal to or greater than the required input energy $E_{ir}$; or

*(2)* Deflection of the structure exceeds the allowable deflection (see paragraph (e)(1)(i) of this section); or

*(3)* The structure load limit occurs before the allowable deflection is reached in rear load (see Figure C–5);

(C) Using data obtained in paragraph (d)(2)(iii)(B) of this section, construct the $L$–$D$ diagram for rear loads as shown in Figure C–5;

(D) Calculate $E_{ir}$;

(E) Calculate $FER_{ir}$;

(F) When the protective-frame structures are an integral part of the enclosure, apply the side load according to Figure C–13, and record $L$ and $D$ simultaneously. Static side-load application shall be distributed uniformly on the frame over an area perpendicular to the direction of load application, and no greater than 160 sq. in. (1,032 sq. cm) in size, with the largest dimension no greater than 27 in. (686 mm). Side-load application shall be at a 90° angle to the centerline of the vehicle. The center of the side-load application shall be located between point $k$, 24 in. (610 mm) forward of the seat-reference point, and point $l$, 12 in. (305 mm) rearward of the seat-reference point, to best use the structural strength (see Figure C–13). This side load shall be applied to the longitudinal side farthest from the point of rear-load application. The test shall be stopped when:

*(1)* The strain energy absorbed by the structure is equal to or greater than the required input energy $E_{is}$; or

*(2)* Deflection of the structure exceeds the allowable deflection (see paragraph (e)(1)(i) of this section); or

*(3)* The structure load limit occurs before the allowable deflection is reached in side load (see Figure C–5);

(G) Using data obtained in paragraph (d)(2)(iii)(F) of this section, construct the $L$–$D$ diagram for the side load as shown in Figure C–5;

(H) Calculate $FER_{is}$; and

(I) Calculate $FER_{ir}$.

(3) *Dynamic test procedure.* (i) The following test conditions shall be met:

(A) The protective enclosure and tractor shall be tested at the weight defined by 29 CFR 1928.51(a);

(B) The dynamic loading shall be accomplished by using a 4,410-lb (2,000-kg) weight acting as a pendulum. The impact face of the weight shall be 27 ± 1 in. by 27 ± 1 in. (686 ± 25 mm by 686 ± 25 mm), and shall be constructed so that its center of gravity is within 1.0 in. (25.4 mm) of its geometric center. The weight shall be suspended from a pivot point 18 to 22 ft (5.5 to 6.7 m) above the point of impact on the enclosure, and shall be conveniently and safely adjustable for height (see Figure C–6);

(C) For each phase of testing, the tractor shall be restrained from moving when the dynamic load is applied. The restraining members shall have strength no less than, and elasticity no greater than, that of 0.50-in. (12.7-mm) steel cable. Points of attachment for the restraining members shall be located an appropriate distance behind the rear axle and in front of the front axle to provide a 15° to 30° angle between the restraining cable and the horizontal. For impact from the rear, the restraining cables shall be located in the plane in which the center of gravity of the pendulum will swing, or alternatively, two sets of symmetrically located cables may be used at lateral locations on the tractor. For the impact from the side, restraining cables shall be used as shown in Figures C–15 and C–16;

(D) The front and rear wheel-tread settings, when adjustable, shall be at the position nearest to halfway between the minimum and maximum settings obtainable on the vehicle. When only two settings are obtainable, the minimum setting shall be used. The tires shall have no liquid ballast, and shall be inflated to the maximum operating pressure recommended by the manufacturer. With specified tire inflation, the restraining cable shall be tightened to provide tire deflection of 6 to 8 percent of nominal tire section width. After the vehicle is retrained properly, a wooden beam no smaller than 6-in. x 6-in. (150-mm x 150-mm) cross-section shall be driven tightly against the appropriate wheels and clamped. For the test to the side, an additional wooden beam shall be placed as a prop against the wheel nearest the operator's station, and shall be secured to the base so that it is held tightly against the wheel rim during impact. The length of this beam shall be chosen so that it is at an angle of 25° to 40° to the horizontal when it is positioned against the wheel rim. It shall have a length 20 to 25 times its depth, and a width two to three times its depth (see Figures C–15 and C–16);

(E) Means shall be provided for indicating the maximum instantaneous deflection along the line of impact. A simple friction device is illustrated in Figure C–4;

(F) No repair or adjustments shall be made during the test; and

(G) When any cables, props, or blocking shift or break during the test, the test shall be repeated.

(ii) $H$ = Vertical height of the center of gravity of a 4,410-lb (2,000-kg) weight in in. ($H'$ in mm). The weight shall be pulled back so that the height of its center of gravity above the point of impact is: $H = 4.92 + 0.00190\ W$ ($H' = 125 + 0.107\ W'$) (see Figure C–7).

(iii) The test procedures shall be as follows:

(A) The enclosure structure shall be evaluated by imposing dynamic loading from the rear, followed by a load to the side on the same enclosure structure. The pendulum swinging from the height determined by paragraph (d)(3)(ii) of this section shall be used to impose the dynamic load. The position of the pendulum shall be so selected that the initial point of impact on the protective structure is in line with the arc of travel of the center of gravity of the pendulum. When a quick-release mechanism is used, it shall not influence the attitude of the block;

(B) *Impact at rear.* The tractor shall be restrained properly according to paragraphs (d)(3)(i)(C) and (d)(3)(i)(D) of this section. The tractor shall be positioned with respect to the pivot point of the pendulum so that the pendulum is 20° from the vertical prior to impact as shown in Figure C–15. The impact shall be applied to the upper extremity of the enclosure structure at the point that is midway between the centerline of the enclosure structure and the inside of the protective structure. When no structural cross member exists at the rear of the enclosure structure, a substitute test beam that does not add to the strength of the structure may be used to complete the test procedure; and

(C) *Impact at side.* The blocking and restraining shall conform to paragraphs (d)(3)(i)(C) and (d)(3)(i)(D) of this section. The center point of impact shall be at the upper extremity of the enclosure at a 90° angle to the centerline of the vehicle, and located between a point *k,* 24 in. (610 mm) forward of the seat-reference point, and a point *l,* 12 in. (305 mm) rearward of the seat-reference point, to best use the structural strength (see Figure C–13). The side impact shall be applied to the longitudinal side farthest from the point of rear impact.

(4) *Field-upset test procedure.* (i) The following test conditions shall be met:

(A) The tractor shall be tested at the weight defined in 29 CFR 1928.51(a);

(B) The following provisions address soil bank test conditions.

(1) The test shall be conducted on a dry, firm soil bank. The soil in the impact area shall have an average cone index in the 0-in. to 6-in. (0-mm to 152-mm) layer of not less than 150. Cone index shall be determined according to American Society of Agricultural Engineers (''ASAE'') recommendation ASAE R313.1–1971 (''Soil cone penetrometer''), as reconfirmed in 1975, which is incorporated by reference. The incorporation by reference was approved by the Director of the Federal Register in accordance with 5 U.S.C. 552(a) and 1 CFR part 51. The path of vehicle travel shall be 12° ± 2° to the top edge of the bank.

(2) ASAE recommendation R313.1–1971, as reconfirmed in 1975, appears in the 1977 Agricultural Engineers Yearbook, or it may be examined at: Any OSHA Regional Office; the OSHA Docket Office, U.S. Department of Labor, 200 Constitution Avenue, NW., Room N–2625, Washington, DC 20210 (telephone: (202) 693–2350 (TTY number: (877) 889–5627)); or the National Archives and Records Administration (''NARA''). (For information on the availability of this material at NARA, telephone (202) 741–6030 or access the NARA Web site at *http://www.archives.gov/federal_register/code_of_federal_regulations/ibr_locations.html.*) Copies may be purchased from the American Society of Agricultural Engineers 2950 Niles Road, St. Joseph, MI 49085.

(C) An 18-in. (457 mm) high ramp (see Figure C–10) shall be used to assist in upsetting the vehicle to the side; and

(D) The front and rear wheel-tread settings, when adjustable, shall be at the position nearest to halfway between the minimum and maximum settings obtainable on the vehicle. When only two settings are obtainable, the minimum setting shall be used.

(ii) Field upsets shall be induced to the rear and side.

(A) Rear upset shall be induced by engine power, with the tractor operating in gear to obtain 3 to 5 mph (4.8 to 8.0 kph) at maximum governed engine rpm by driving forward directly up a minimum slope of 60° ± 5° as shown in Figure C–11, or by an alternate equivalent means. The engine clutch may be used to aid in inducing the upset; and

(B) To induce side upset, the tractor shall be driven under its own power along the specified path of travel at a minimum speed of 10 mph (16 kph), or at maximum vehicle speed when under 10 mph (16 kph), and over the ramp as described in paragraph (d)(4)(i)(C) of this section.

(e) *Performance requirements.* (1) *General requirements.* (i) The protective enclosure structural members or other parts in the operator area may be deformed in these tests, but shall not shatter or leave sharp edges exposed to the operator. They shall not encroach on a transverse plane passing through points *d* and *f* within the projected area defined by dimensions *d, e,* and *g,* or on the dimensions shown in Figures C–13 and C–14, as follows:

*d* = 2 in. (51 mm) inside of the protective structure to the vertical centerline of the seat;
*e* = 30 in. (762 mm) at the longitudinal centerline;
*f* = Not greater than 4 in. (102 mm) measured forward of the seat-reference point (''*SRP*'') at the longitudinal centerline as shown in Figure C–14;
*g* = 24 in. (610 mm) minimum;
*h* = 17.5 in. (445 mm) minimum; and
*j* = 2.0 in. (51 mm) measured from the outer periphery of the steering wheel.

(ii) The protective structure and connecting fasteners must pass the static or dynamic tests described in paragraphs (d)(2), (d)(3), or (d)(4) of this section at a metal temperature of 0 °F (−8 °C) or below, or exhibit Charpy V-notch impact strengths as follows:

10-mm x 10-mm (0.394-in. x 0.394-in.) specimen: 8.0 ft-lb (10.8 J) at −20 °F (−30 °C);
10-mm x 7.5-mm (0.394-in. x 0.296-in.) specimen: 7.0 ft-lb (9.5 J) at −20 °F (−30 °C);
10-mm x 5-mm (0.394-in. x 0.197-in.) specimen: 5.5 ft-lb (7.5 J) at −20 °F (−30 °C); or
10-mm x 2.5-mm (0.394-in. x 0.098-in.) specimen: 4.0 ft-lb (5.5 J) at −20 °F (−30 °C).

Specimens shall be longitudinal and taken from flat stock, tubular, or structural sections before forming or welding for use in the protective enclosure. Specimens from tubular or structural sections shall be taken from the middle of the side of greatest dimension, not to include welds.

(iii) The following provisions address glazing requirements.

(A) Glazing shall conform to the requirements contained in Society of Automotive Engineers (''SAE'') standard J674–1963 (''Safety glazing materials''), which is incorporated by reference. The incorporation by reference was approved by the Director of the Federal Register in accordance with 5 U.S.C. 552(a) and 1 CFR part 51.

(B) SAE standard J674–1963 appears in the 1965 SAE Handbook, or it may be examined at: any OSHA Regional Office; the OSHA Docket Office, U.S. Department of Labor, 200 Constitution Avenue, NW., Room N–2625, Washington, DC 20210 (telephone: (202) 693–2350 (TTY number: (877) 889–5627)); or the National Archives and Records Administration (''NARA''). (For information on the availability of this material at NARA, telephone (202) 741–6030 or access the NARA Web site at *http://www.archives.gov/federal_register/code_of_federal_regulations/ibr_locations.html.*) Copies may be purchased from the Society of Automotive Engineers, 400 Commonwealth Drive, Warrendale, Pennsylvania 15096–0001.

(iv) Two or more operator exits shall be provided and positioned to avoid the possibility of both being blocked by the same accident.

(2) *Static test-performance requirements.* In addition to meeting the requirements of paragraph (e)(1) of this section for both side and rear loads, $FER_{is}$ and $FER_{ir}$ shall be greater than 1.0.

(3) *Dynamic test-performance requirements.* The structural requirements shall be met when the dimensions in paragraph (e)(1) of this section are used in both side and rear loads.

(4) *Field-upset test performance requirements.* The requirements of paragraph (e)(1) of this section shall be met for both side and rear upsets.

## Appendix B to Subpart C—Figures C–1 through C–16

BILLING CODE 4510–16–P

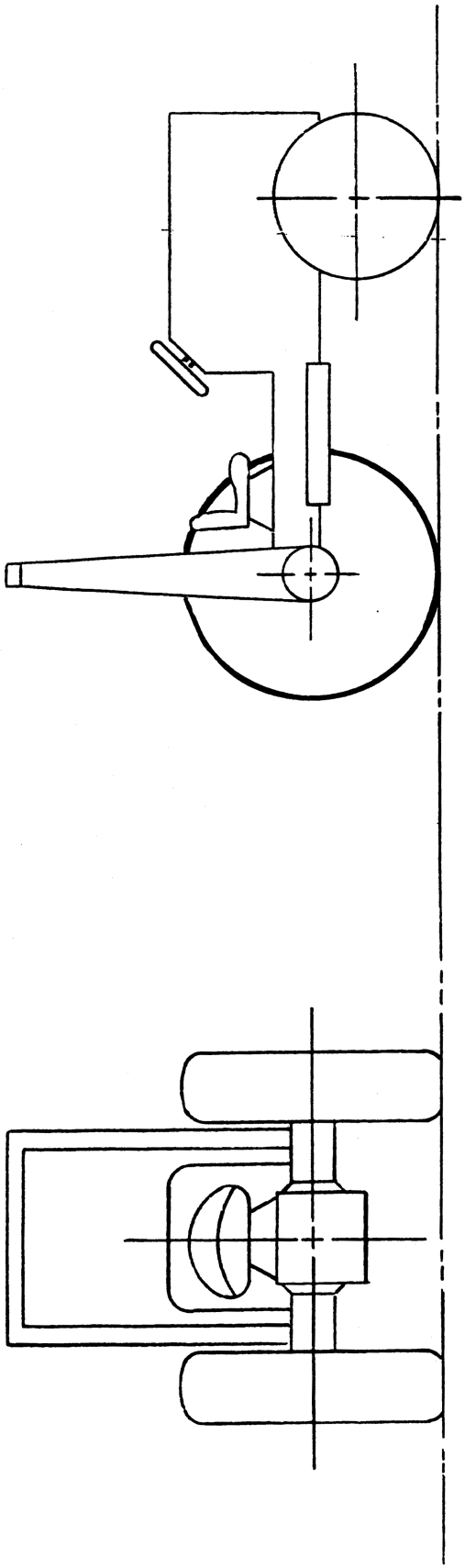

FIG. C-1 TRACTOR WITH TYPICAL PROTECTIVE FRAME

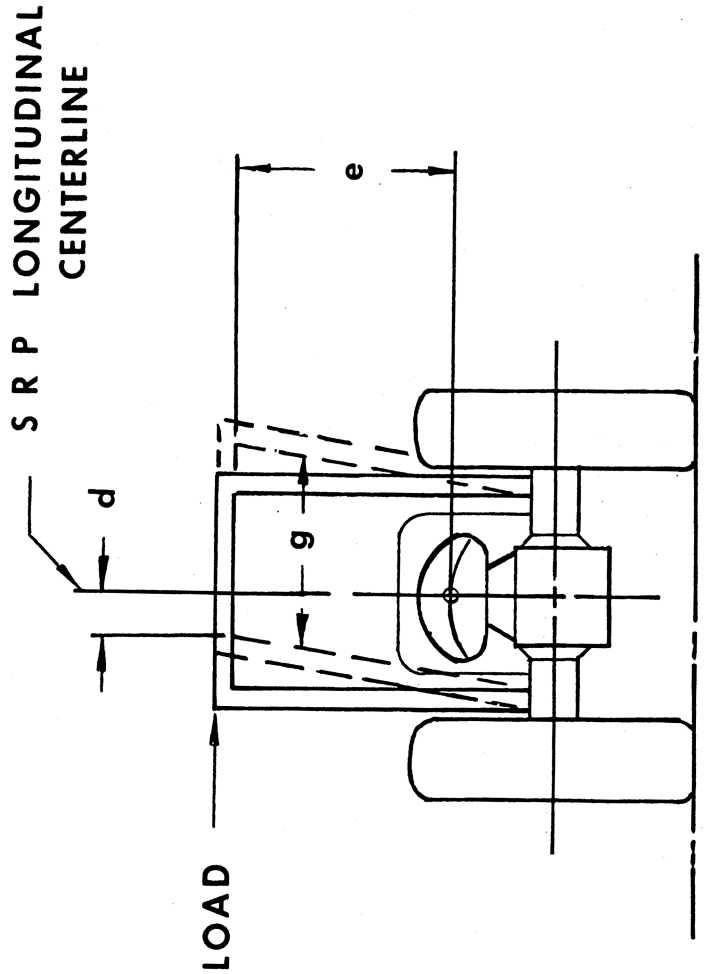


FIG. C-2 SIDE LOAD APPLICATION

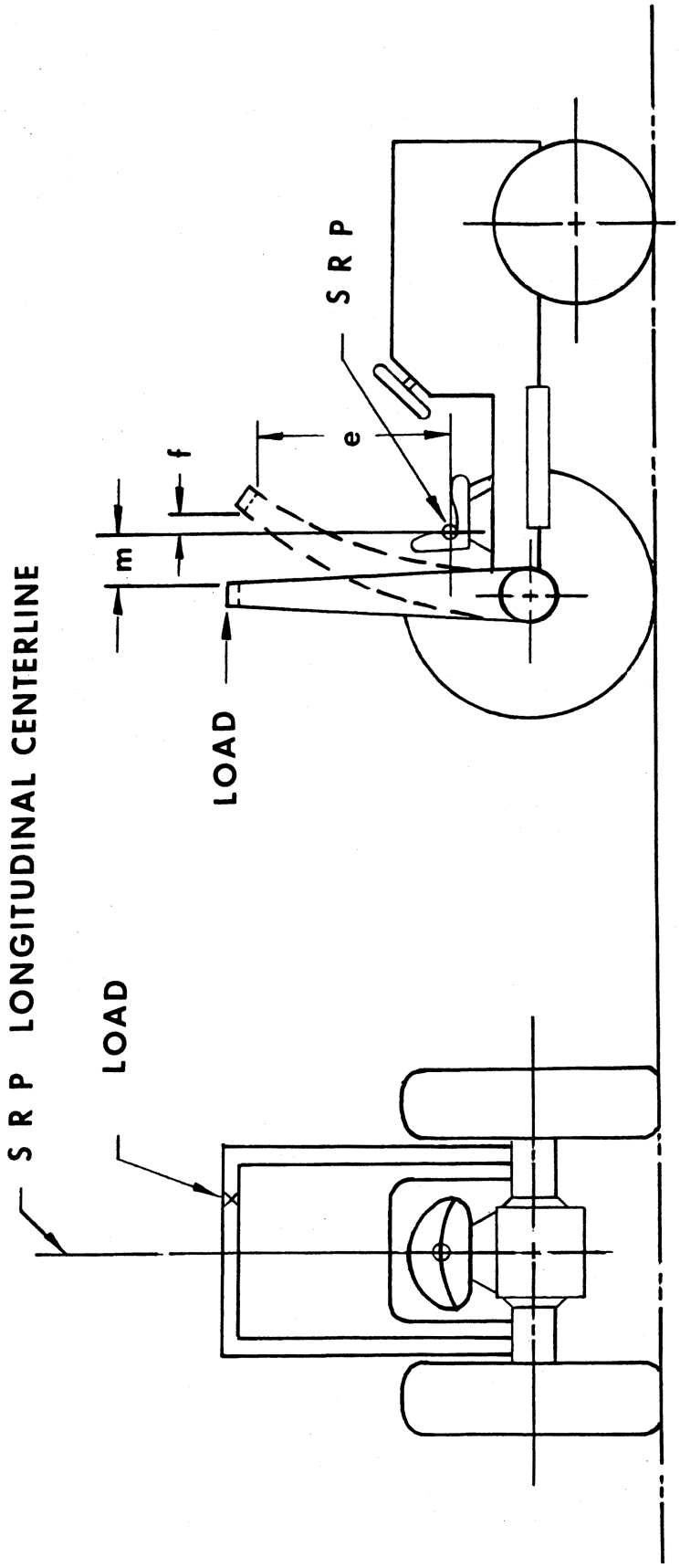


FIG. C-3 REAR LOAD APPLICATION

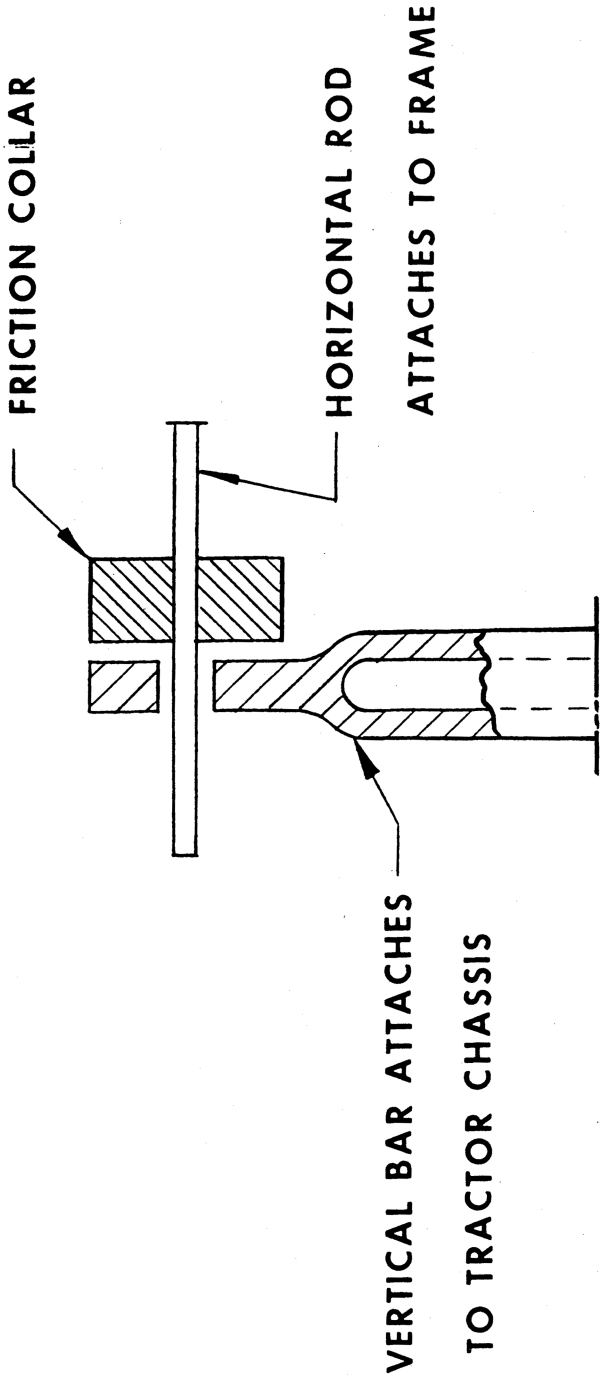


FIG. C-4 TYPICAL METHOD OF MEASURING DEFLECTION

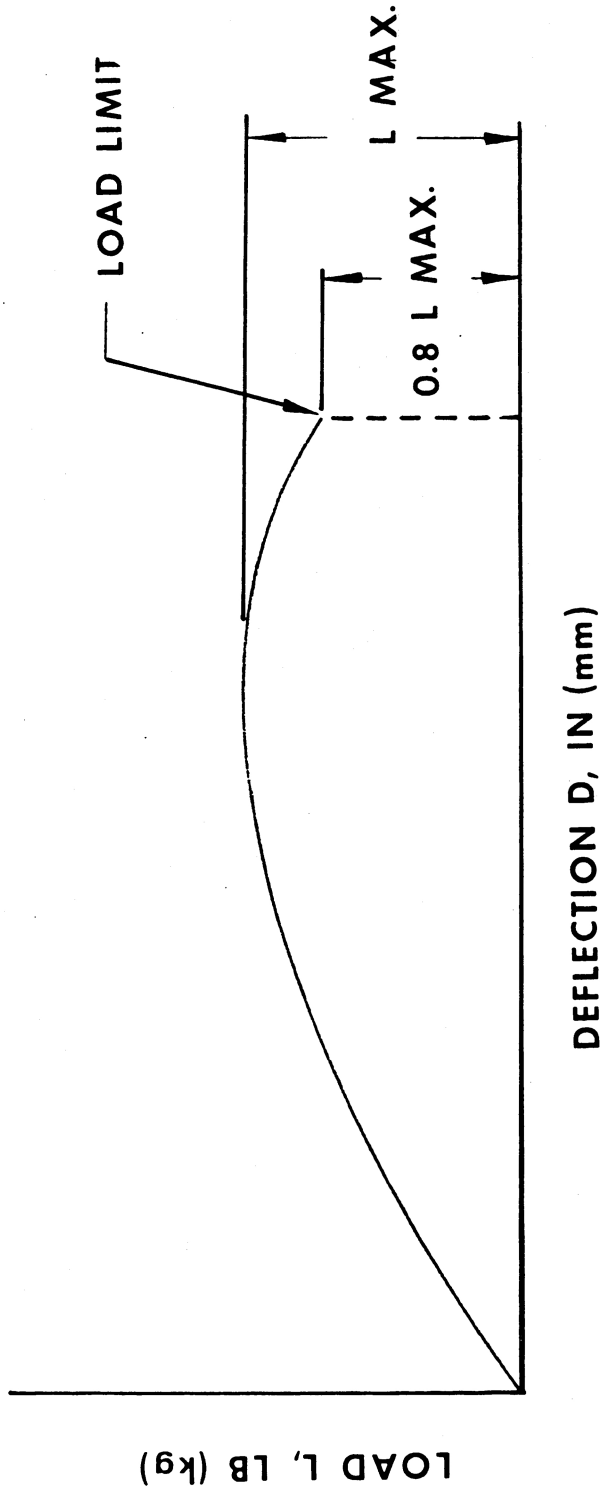


FIG. C-5 TYPICAL L-D DIAGRAM

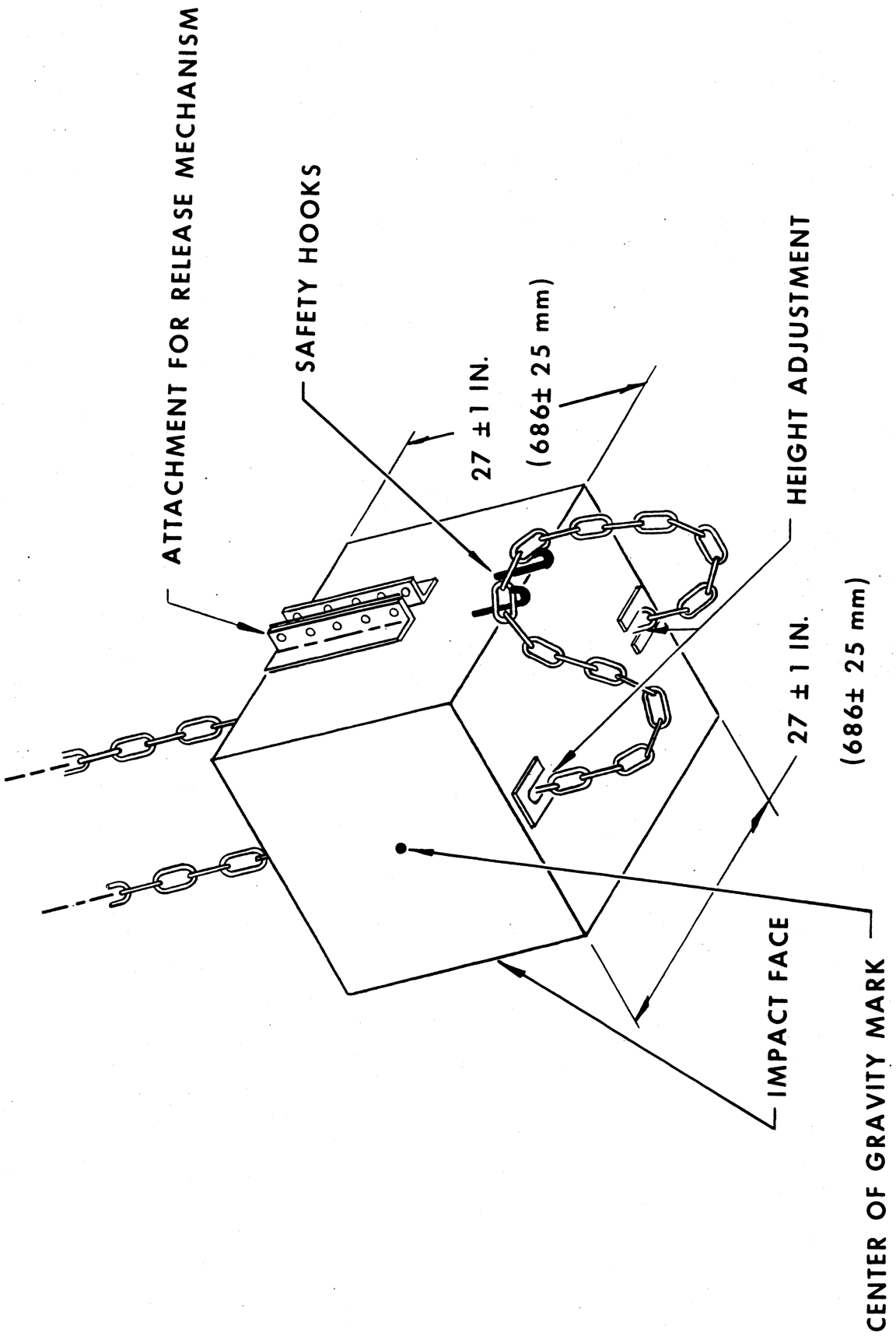


FIG. C-6 PENDULUM

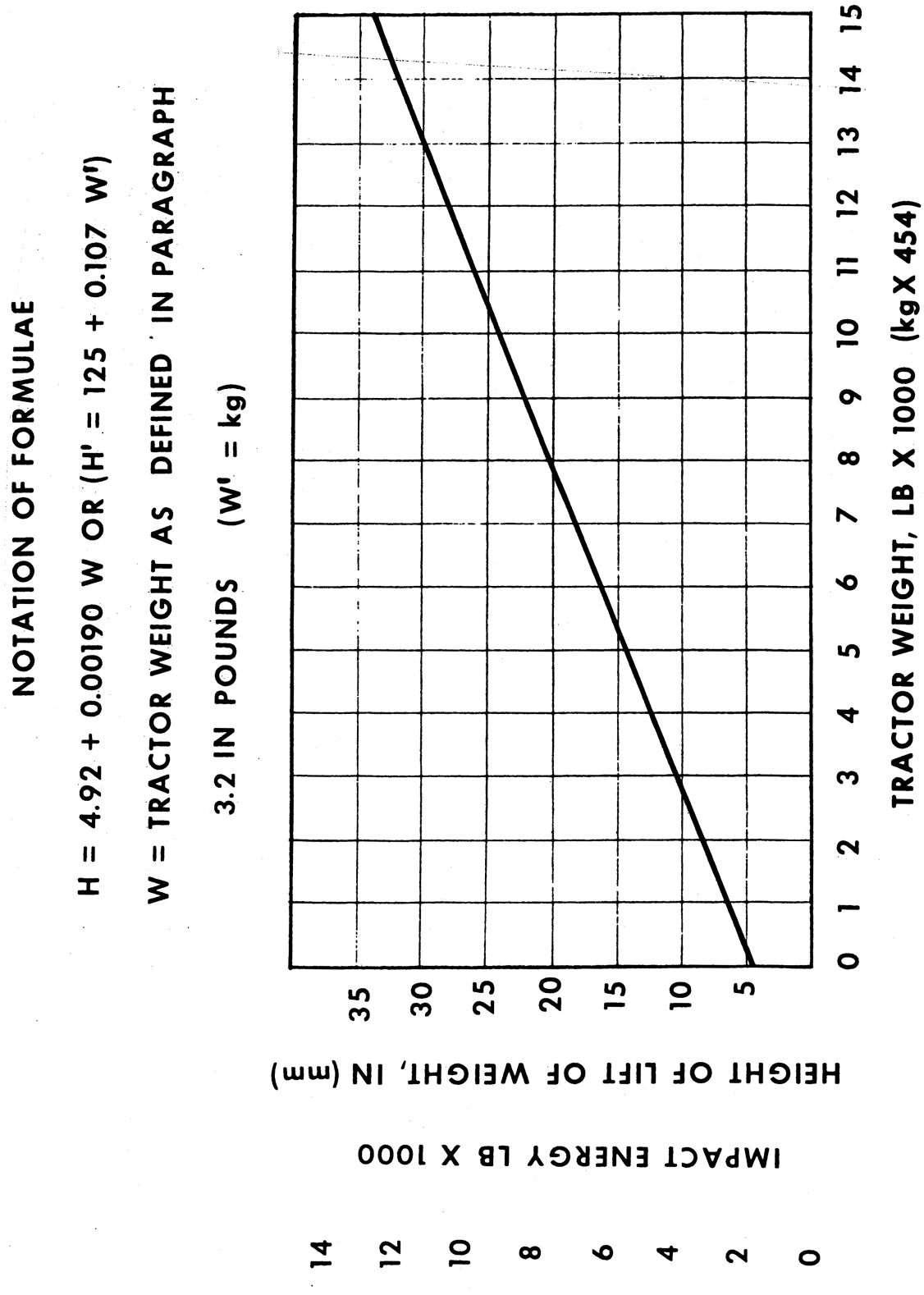


FIG. C-7 IMPACT ENERGY AND CORRESPONDING LIFT HEIGHT OF 4410 LB. (2000 kg) WEIGHT

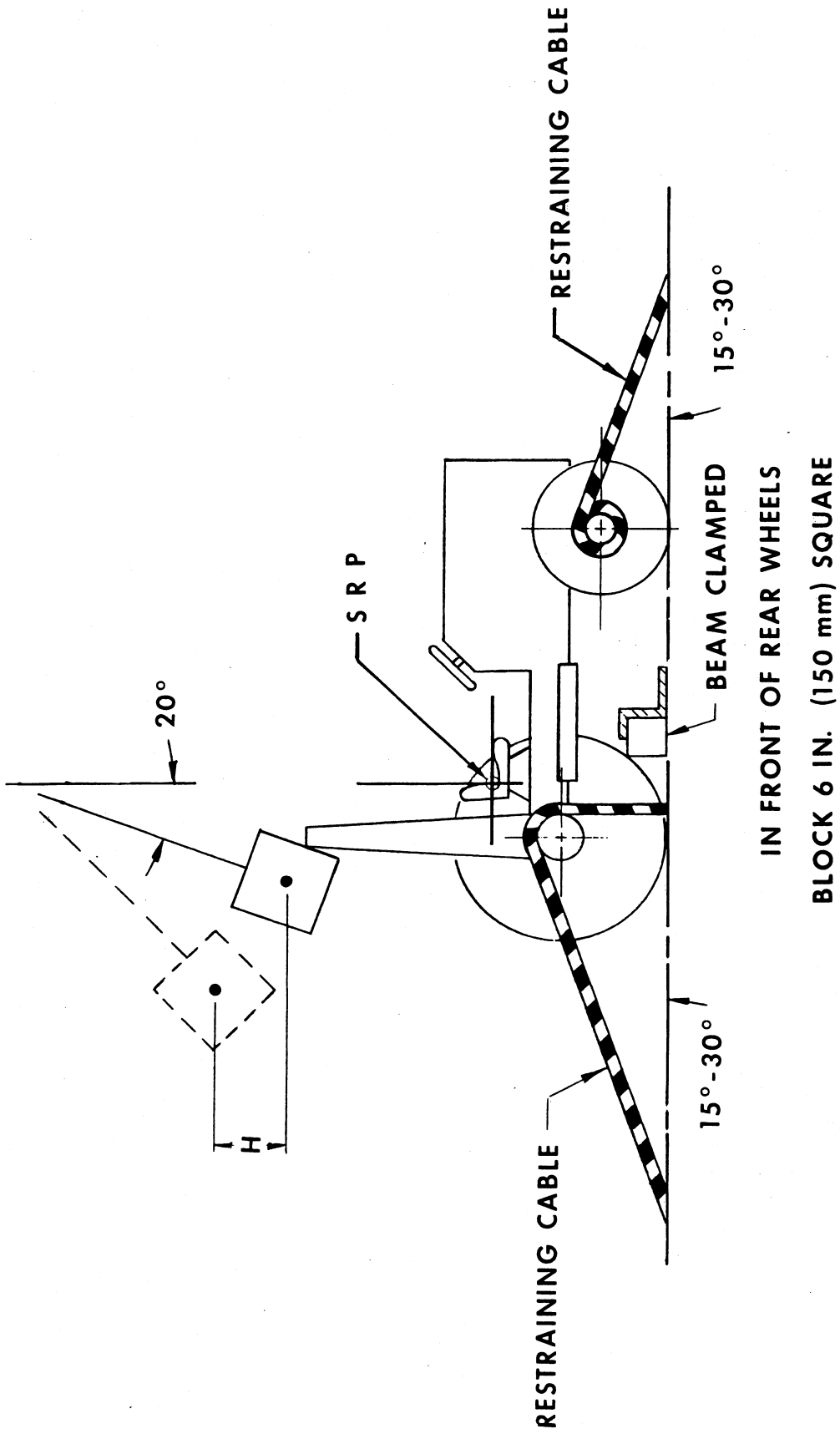


FIG. C-8 REAR IMPACT APPLICATION

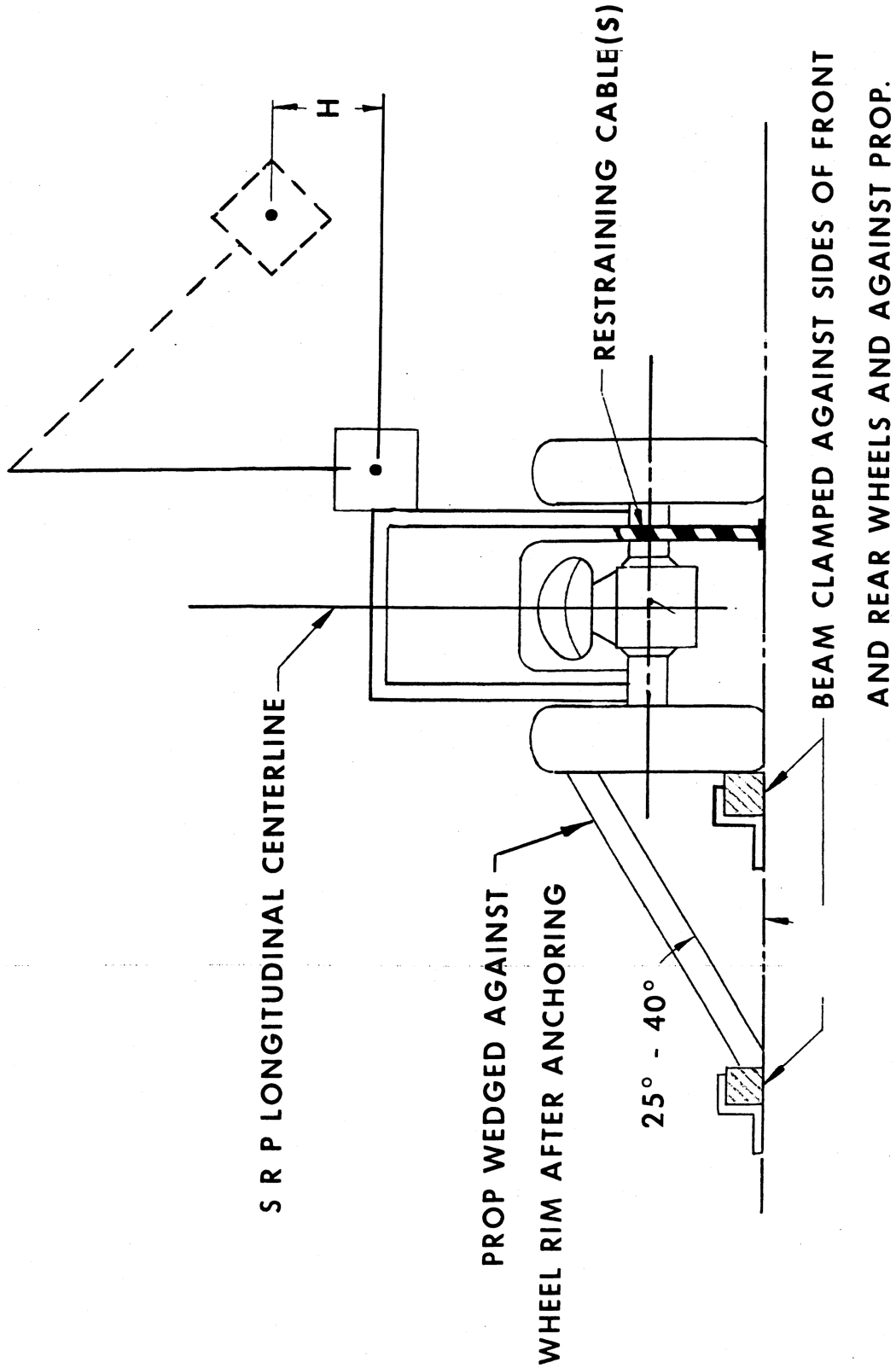


FIG. C-9 SIDE IMPACT APPLICATION

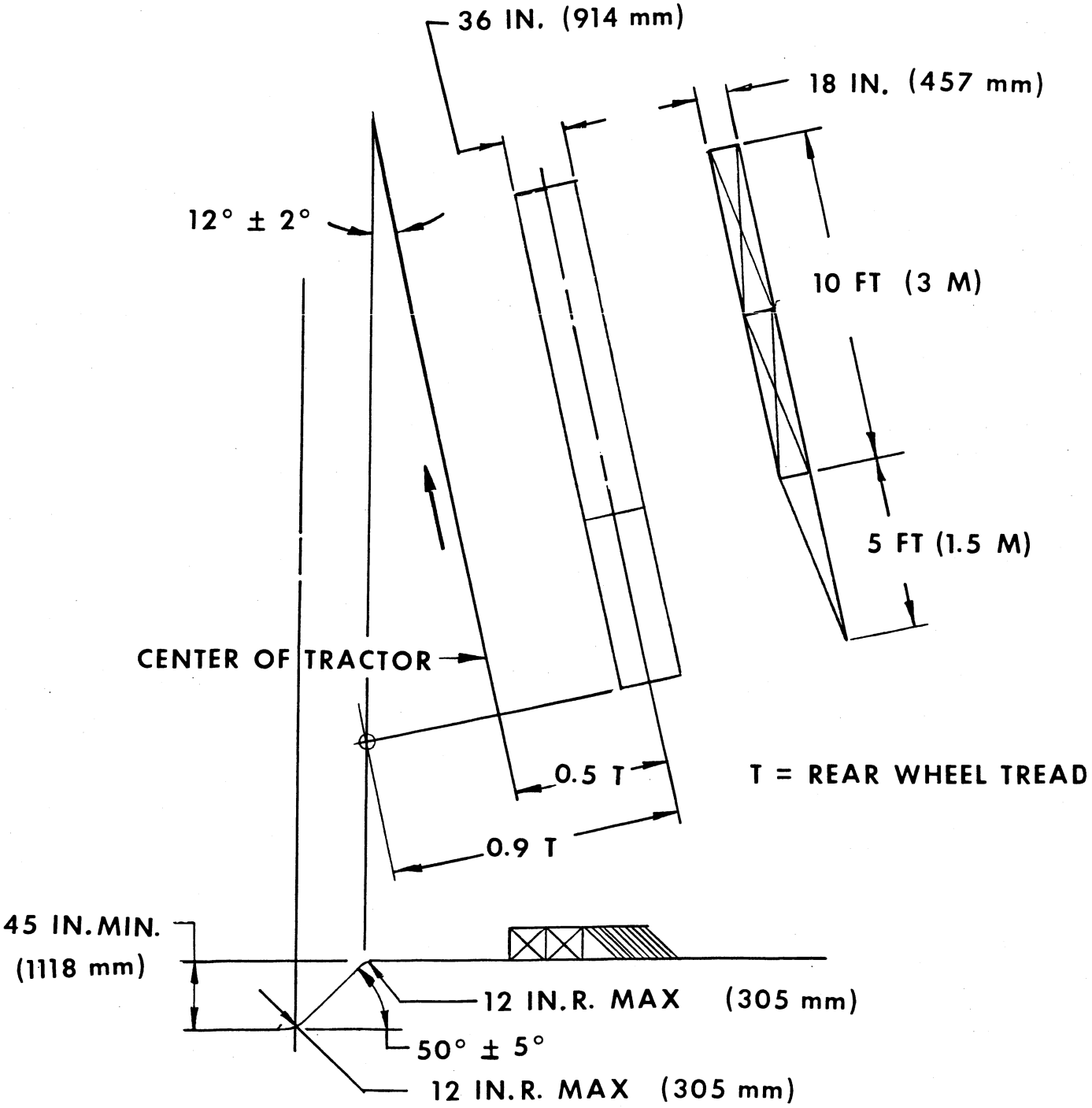


FIG. C-10 SIDE OVERTURN BANK AND RAMP

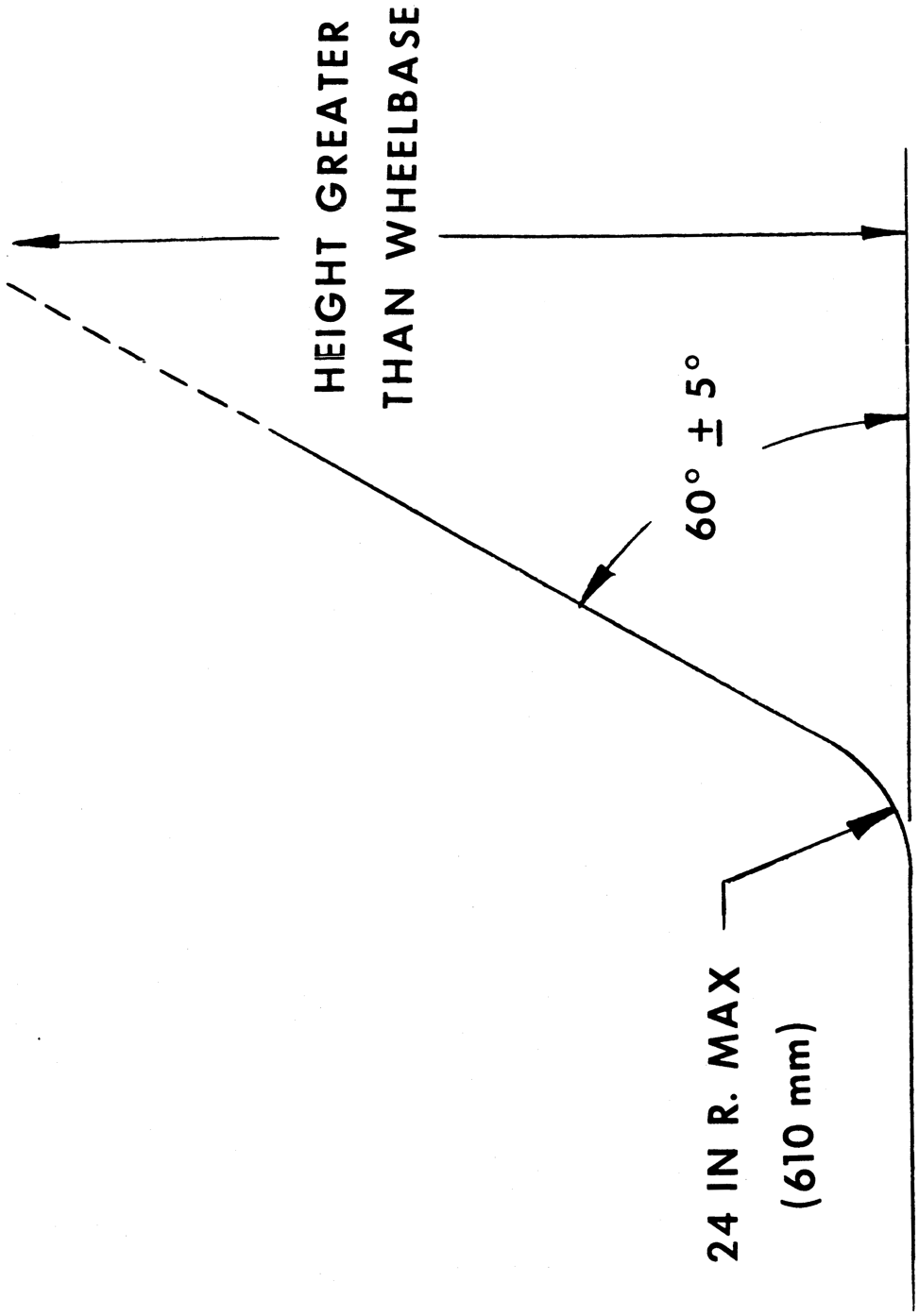


FIG. C-11 TYPICAL REAR OVERTURN BANK

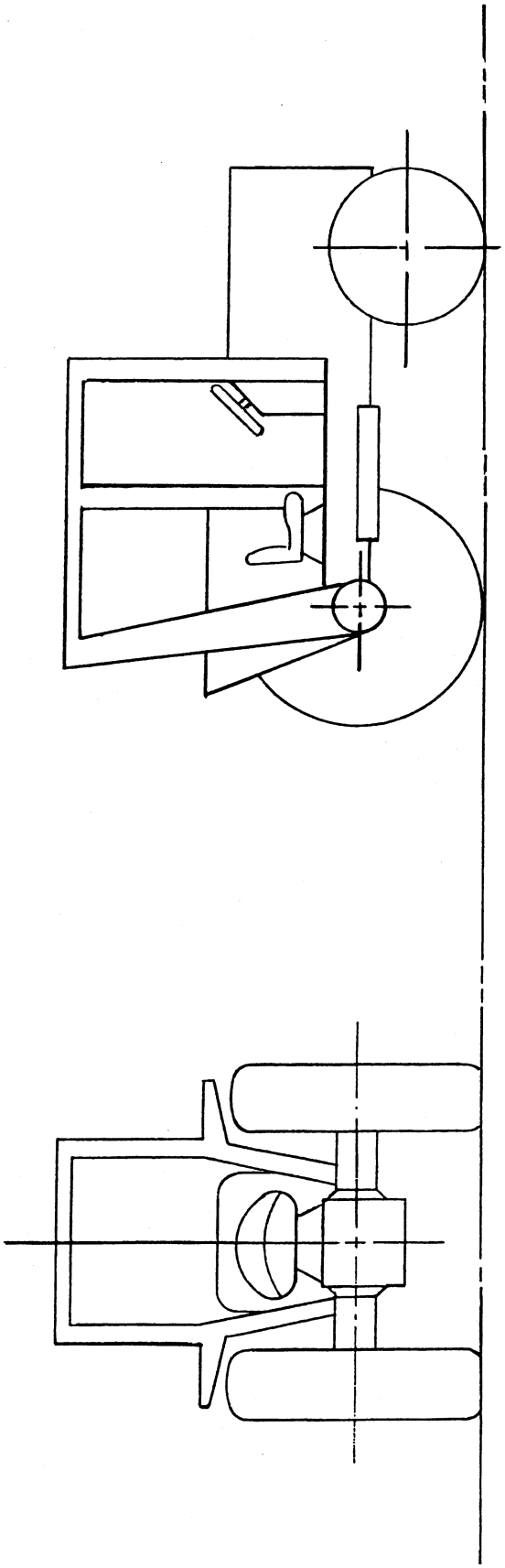

FIG. C-12 TRACTOR WITH TYPICAL PROTECTIVE ENCLOSURE

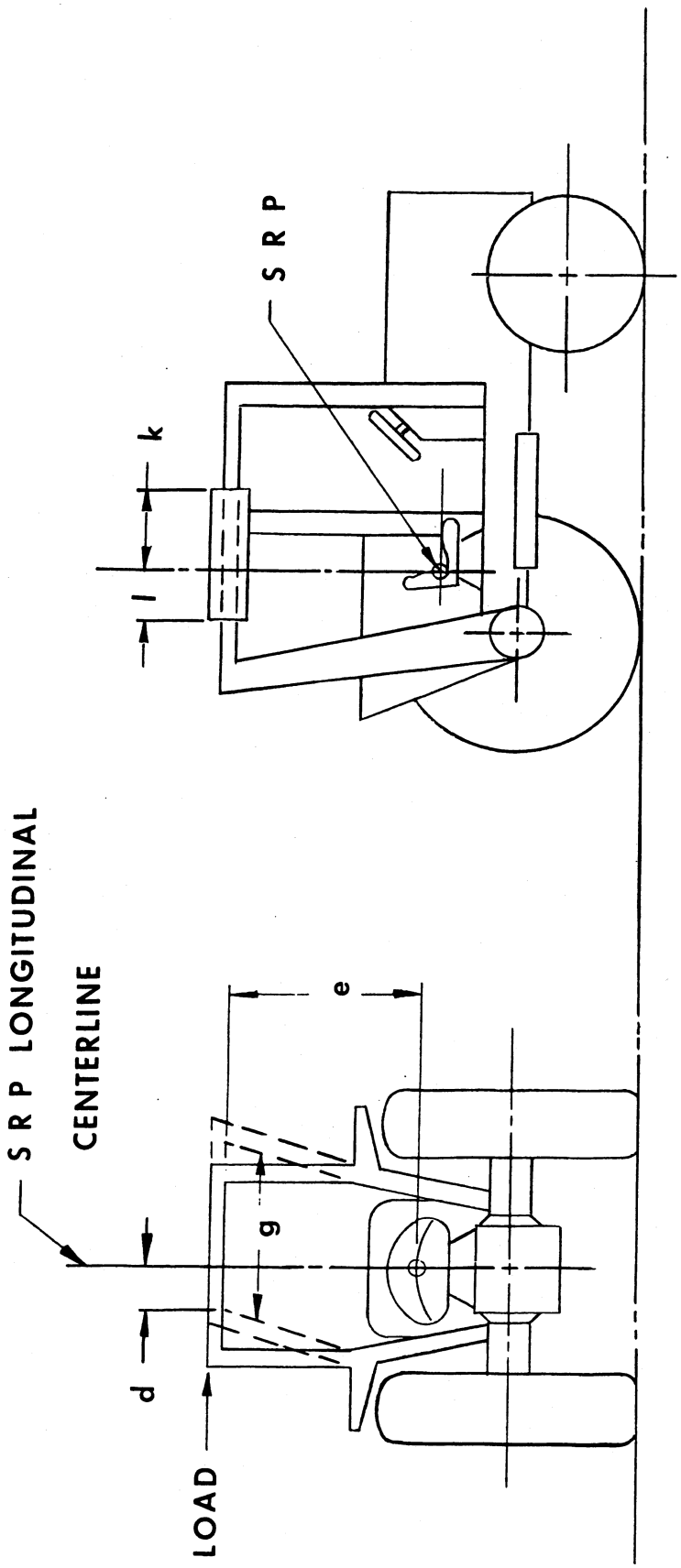


FIG. C-13 SIDE LOAD APPLICATION

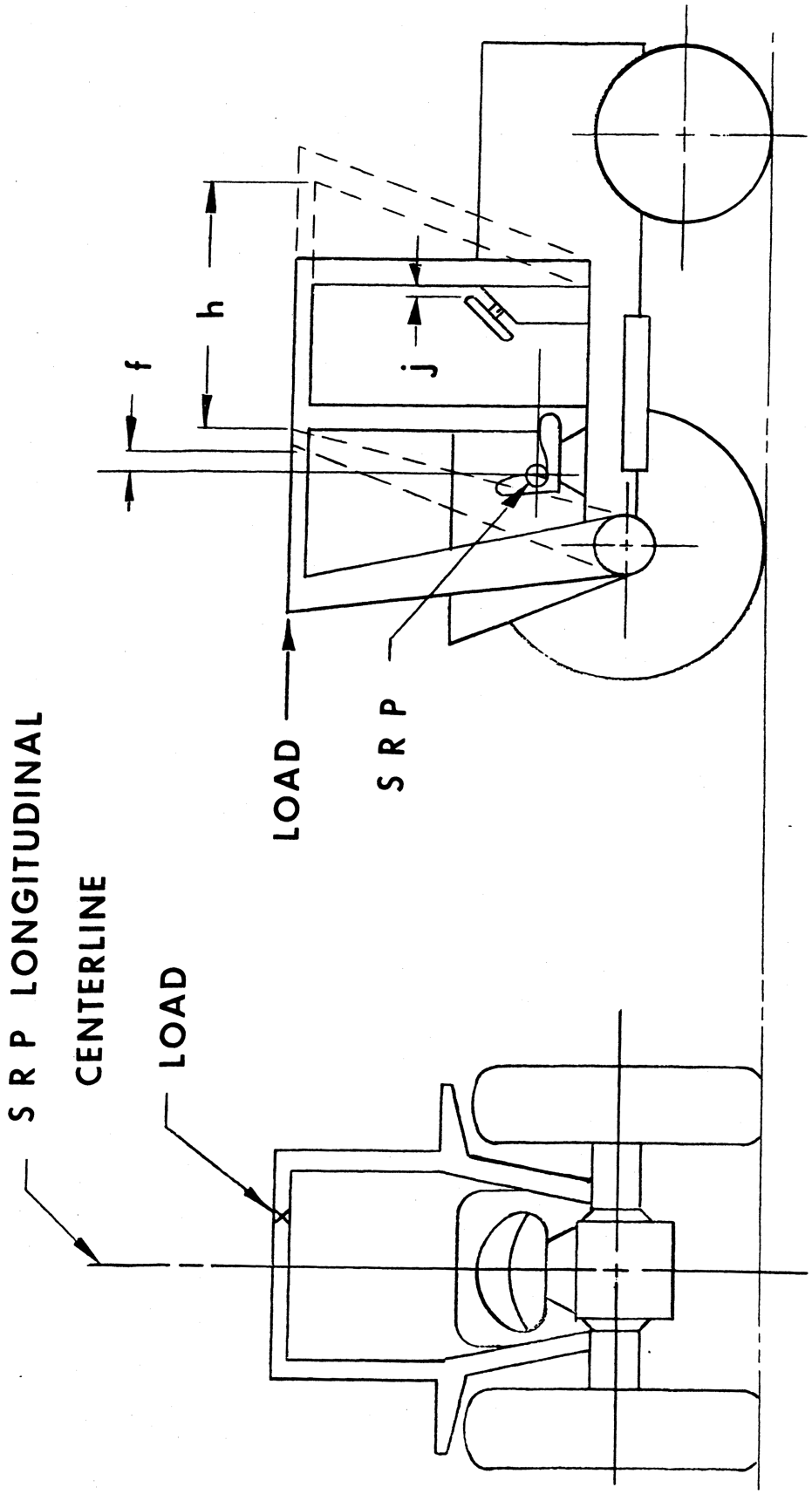


FIG. C-14 REAR LOAD APPLICATION

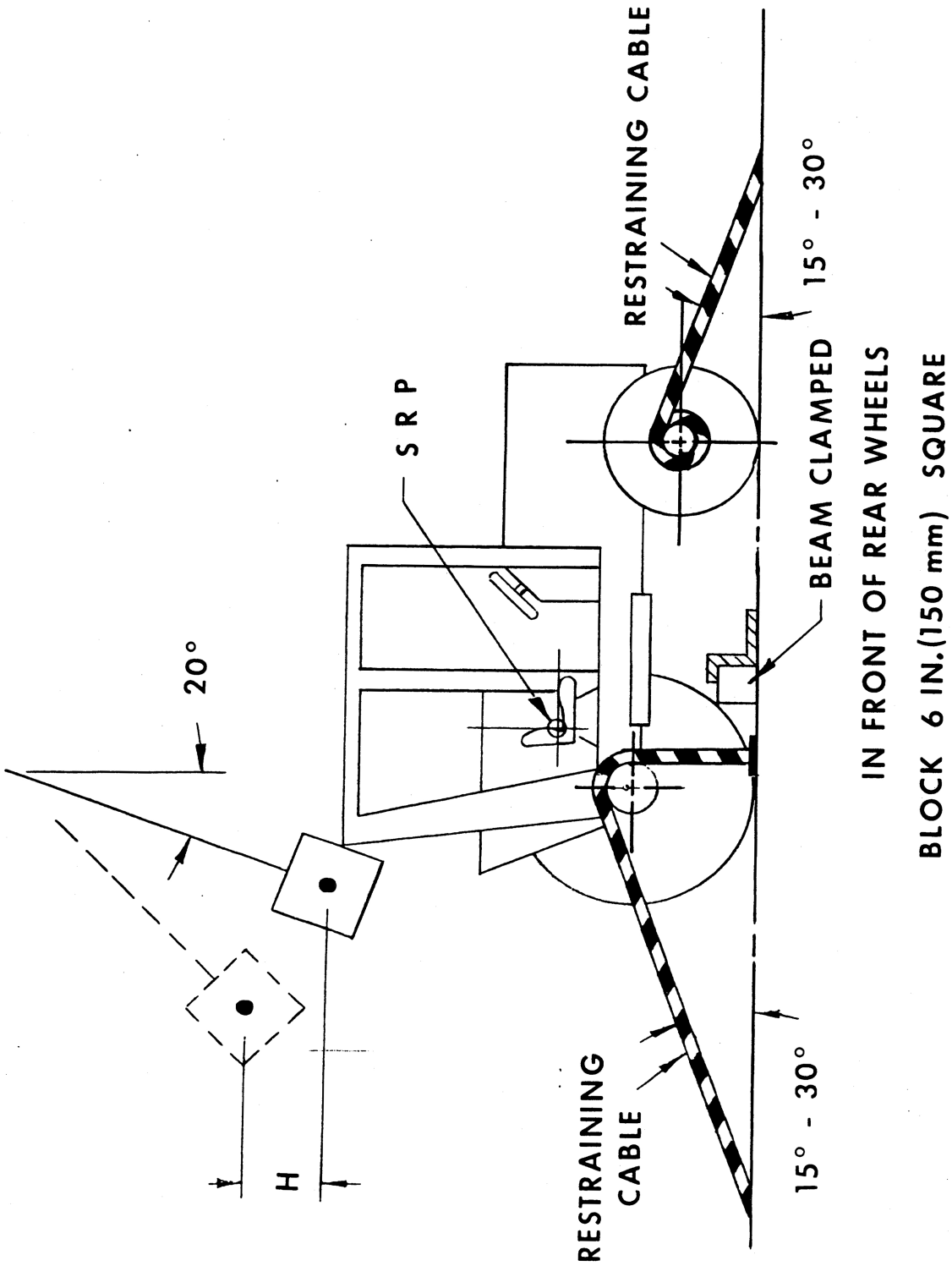


FIG. C-15 REAR IMPACT APPLICATION

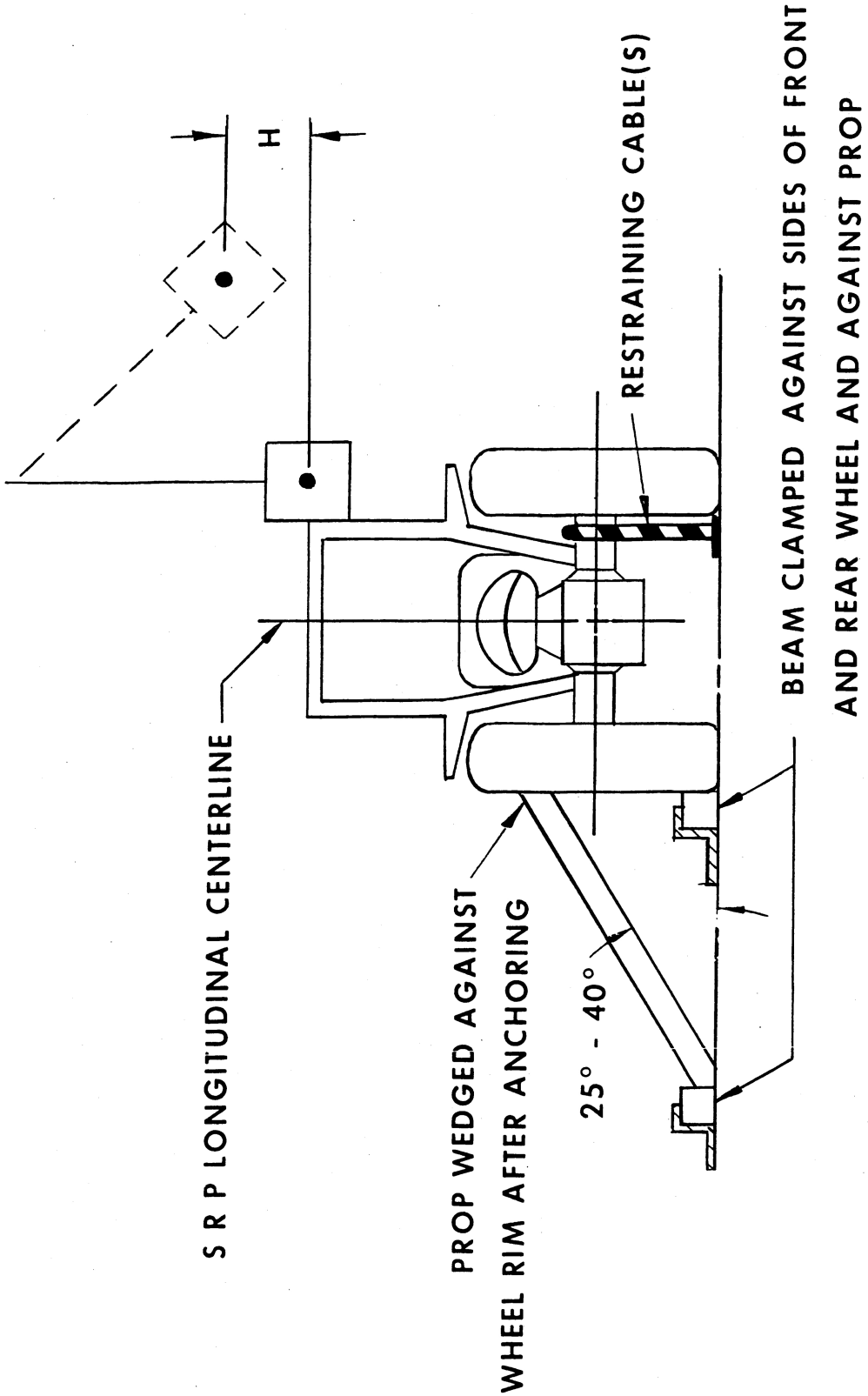


FIG. C-16 SIDE IMPACT APPLICATION

[FR Doc. 05–24462 Filed 12–28–05; 8:45 am]
BILLING CODE 4510–26–C

**ENVIRONMENTAL PROTECTION AGENCY**

**40 CFR Parts 52 and 81**

**[EPA–R05–OAR–2005–IN–0006; FRL–8015–7]**

# Determination of Attainment, Approval and Promulgation of Implementation Plans and Designation of Areas for Air Quality Planning Purposes; Indiana; Redesignation of the Evansville Area To Attainment of the 8-Hour Ozone Standard

**AGENCY:** Environmental Protection Agency (EPA).

**ACTION:** Final rule.

**SUMMARY:** EPA is determining that the Evansville 8-hour ozone nonattainment area (Evansville area) has attained the 8-hour ozone National Ambient Air Quality Standard (NAAQS). The Evansville area includes Vanderburgh and Warrick Counties. EPA is approving a request from the State of Indiana, submitted on June 2, 2005, to redesignate the Evansville area from nonattainment to attainment for the 8-hour ozone NAAQS. EPA's approval of the redesignation request is based on the determination that the Evansville area and the State of Indiana have met the criteria for redesignation to attainment set forth in the Clean Air Act (CAA), including the determination that the Evansville area has attained the 8-hour ozone standard. In conjunction with this approval, EPA is approving the State's plan for maintaining the 8-hour ozone NAAQS in the Evansville area through 2015 as a revision to the Indiana State Implementation Plan (SIP). EPA also finds as adequate and approves the 2015 Volatile Organic Compounds (VOC) and Nitrogen Oxides ($NO_X$) Motor Vehicle Emission Budgets (MVEBs) for the Evansville area contained in the Evansville area ozone maintenance plan.

**DATES:** This rule is effective on January 30, 2006.

**ADDRESSES:** EPA has established a docket for this action under Docket ID No. EPA–R05–OAR–2005–IN–0006. All documents in the docket are listed on the *www.regulations.gov* Web site. Although listed in the index, some information is not publicly available, *i.e.*, Confidential Business Information (CBI) or other information whose disclosure is restricted by statute. Certain other material, such as copyrighted material, is not placed on the Internet and will be publicly available only in hard copy form. Publicly available docket materials are available either electronically through *www.regulations.gov* or in hard copy at the Environmental Protection Agency, Region 5, Air and Radiation Division, 77 West Jackson Boulevard, Chicago, Illinois 60604. This facility is open from 8:30 a.m. to 4:30 p.m., Monday through Friday, excluding Federal holidays. We recommend that you telephone Edward Doty, Environmental Scientist, at (312) 886–6057 before visiting the Region 5 office.

**FOR FURTHER INFORMATION CONTACT:** Edward Doty, Environmental Scientist, Criteria Pollutant Section, Air Programs Branch (AR–18J), U.S. Environmental Protection Agency, Region 5, 77 West Jackson Boulevard, Chicago, Illinois 60604, (312) 886–6057, *doty.edward@epa.gov.*

**SUPPLEMENTARY INFORMATION:** In the following, whenever ''we,'' ''us,'' or ''our'' are used, we mean the United States Environmental Protection Agency.

**Table of Contents**

I. What Is the Background for This Rule?
II. What Actions Are We Taking and When Are They Effective?
A. Determination of Attainment and Redesignation of the Evansville Area To Attainment of the 8-Hour Ozone NAAQS
B. Approval of Indiana's Ozone Maintenance Plan for the Evansville Area
C. Approval and Finding of Adequacy of VOC and $NO_X$ Motor Vehicle Emission Budgets for the Evansville Area
D. Effective Date of These Actions
III. Why Are We Taking These Actions?
IV. What Are the Effects of These Actions?
V. What Comments Did We Receive and What Are Our Responses?
VI. What Are Our Final Actions?
VII. Statutory and Executive Order Review

## I. What Is the Background for This Rule?

EPA has determined that ground-level ozone is detrimental to human health. On July 18, 1997, the EPA promulgated an 8-hour ozone NAAQS (62 FR 38856) of 0.08 parts per million parts of air (0.08 ppm). This standard is violated in an area when any ozone monitor in the area records an average of the annual fourth-highest daily maximum 8-hour ozone concentrations equaling or exceeding 0.085 ppm over a three-year period. Ground-level ozone is not emitted directly by sources. Rather, emitted VOC and $NO_X$ react in the presence of sunlight to form ground-level ozone along with other secondary compounds. VOC and $NO_X$ are referred to as ''ozone precursors.''

In accordance with section 107(d) of the CAA as amended in 1977, EPA designated the Evansville area (Vanderburgh and Warrick Counties) as an ozone nonattainment area for the 8-hour ozone NAAQS based on ozone data collected in this area during the 2001–2003 period. The **Federal Register** notice making this designation was signed on April 15, 2004, and was published on April 30, 2004 (69 FR 23857).

The Clean Air Act contains two sets of provisions—subpart 1 and subpart 2—that address planning and emission control requirements for nonattainment areas (both subparts are found in title I, part D of the CAA). Subpart 1 contains general, less prescriptive requirements for nonattainment areas governed by any NAAQS, and applies to all nonattainment areas. Subpart 2 contains more specific requirements for certain ozone nonattainment areas, and applies to ozone nonattainment areas classified under section 181 of the CAA.

In the April 30, 2004 ozone designation rulemaking, EPA divided 8-hour ozone nonattainment areas into the categories of subpart 1 nonattainment and subpart 2 nonattainment based on their 8-hour ozone design values (*i.e.*, the three-year average annual fourth-highest daily maximum 8-hour ozone concentrations at the worst-case ozone monitoring sites in the designated areas) and their 1-hour ozone design values (*i.e.*, the fourth-highest daily maximum 1-hour ozone concentrations over the three-year period at the worst-case monitoring sites in the designated areas).[1] 8-hour ozone nonattainment areas with 1-hour ozone design values equaling or exceeding 0.121 ppm were designated as classified nonattainment areas (as nonattainment areas required to meet the requirements of subpart 2 of the CAA). All other 8-hour nonattainment areas were designated as ''basic'' nonattainment areas subject only to the requirements of subpart 1 of the CAA.

In the April 30, 2004 designation rulemaking, the Evansville area was designated as nonattainment for the 8-hour ozone standard, and was identified as a subpart 1 basic nonattainment area. This designation was based on ozone data collected in the Evansville area during the period of 2001–2003.

On June 2, 2005, the State of Indiana requested redesignation of the

[1] The 1-hour ozone standard, 0.12 ppm, has been replaced by the 8-hour ozone standard, with the 1-hour ozone standard being revoked on June 15, 2005.

Evansville area to attainment of the 8-hour ozone NAAQS based on ozone data collected during the period of 2002–2004. This redesignation request also included a 10-year ozone maintenance plan for the Evansville area and VOC and $NO_X$ MVEBs for the Evansville area based on emission projections in the ozone maintenance plan.

On September 9, 2005, EPA published a proposed rule (70 FR 53605), proposing to: (1) Determine that the Evansville area has attained the 8-hour ozone NAAQS and to approve Indiana's request to redesignate the Evansville area to attainment of the 8-hour ozone NAAQS; (2) approve Indiana's ozone maintenance plan for the Evansville area; and (3) approve the 2015 VOC and $NO_X$ MVEBs for the Evansville area and notify the public that these MVEBs are adequate for purposes of transportation conformity. This proposed rule established a 30-day public comment period. EPA received several requests for a hearing and for extension of the comment period on the proposed rule. EPA denied the requests for the hearing, stating it believed that the opportunity to submit written comments provided an adequate opportunity for public input. EPA did, however, grant a seven-day extension to the public comment period. See 70 FR 58167 (October 5, 2005).

## II. What Actions Are We Taking and When Are They Effective?

After consideration of the comments received in response to the September 9, 2005 proposed rule, as described in section V below, and the State's final adopted SIP revision and supporting material (reviewed in detail in the September 9, 2005 proposed rule), we are taking the following actions:

### *A. Determination of Attainment and Redesignation of the Evansville Area To Attainment of the 8-Hour Ozone NAAQS*

In the September 9, 2005 proposed rule (70 FR 53605), EPA proposed to determine that the Evansville area had attained the 8-hour ozone NAAQS and to approve Indiana's request to redesignate this area to attainment of the 8-hour ozone NAAQS. These proposed actions were based on ozone data from the period of 2002–2004 and on the State's demonstration that the criteria for redesignation to attainment, as specified in section 107 of the Clean Air Act, had been satisfied. EPA has reviewed the ambient monitoring data for ozone consistent with the requirements contained in 40 CFR part 58 and recorded in EPA's Aerometric Information Retrieval System (AIRS) for the Evansville area for both the 2002–2004 ozone seasons and the 2003–2005 [2] ozone seasons. On the basis of this review, EPA has determined that the area has attained the 8-hour ozone standard. Review of the ozone data, the State's submissions, and the public comments for and against the redesignation (see section V below) lead us to the conclusion that: (1) The Evansville ozone nonattainment area has attained the 8-hour ozone standard; and (2) the State of Indiana has met the criteria for redesignation of the Evansville area to attainment of the 8-hour ozone NAAQS. Therefore, in this final rule, we are finalizing our determination of attainment, and we are approving Indiana's request for redesignation of the Evansville area to attainment of the 8-hour ozone NAAQS.

The State must continue to operate an appropriate ozone monitoring network, in accordance with 40 CFR part 58, to verify the attainment status of the Evansville area. The air quality data relied on to determine that the area continues to attain the ozone NAAQS must be consistent with 40 CFR part 58 requirements and other relevant EPA guidance and must be recorded in EPA's AIRS.

### *B. Approval of Indiana's Ozone Maintenance Plan for the Evansville Area*

EPA is approving Indiana's plan for maintaining the 8-hour ozone NAAQS in the Evansville area through 2015 as a revision to the Indiana SIP. The maintenance plan meets the requirements of sections 175A and 107(d) of the Clean Air Act. The adopted maintenance plan contains triggering mechanisms and contingency measures designed to promptly correct (or prevent) a violation of the 8-hour ozone NAAQS occurring after redesignation of the Evansville area to attainment of the NAAQS. Section 175A of the Clean Air Act requires that a maintenance plan include such contingency measures as EPA deems necessary to assure that the State will promptly correct a violation of the NAAQS that occurs after redesignation.

The contingency measures listed in the adopted maintenance plan include, but are not limited to, the following:

1. Lower Reid vapor pressure gasoline requirements; [3]
2. Broader geographic applicability of existing emission control measures;
3. Tightened Reasonably Available Control Technology (RACT) requirements on existing sources covered by EPA Control Technique Guidelines (CTGs) issued in response to the 1990 Clean Air Act amendments;
4. Application of RACT to smaller existing sources;
5. Vehicle Inspection and Maintenance (I/M);
6. One or more Transportation Control Measures (TCM) sufficient to achieve at least a 0.5 percent reduction in actual area-wide VOC emissions;
7. Alternative fuel and diesel retrofit programs for fleet vehicle operations;
8. Controls on consumer products consistent with those adopted elsewhere in the United States;
9. VOC and $NO_X$ emission offsets for new or modified sources;
10. Increased ratio of the emission offset required for new sources; and,
11. VOC and $NO_X$ emission controls on new minor sources (with VOC or $NO_X$ emissions less than 100 tons per year).

Consideration and selection of one or more of the contingency measures will take place when a two-year average annual fourth-high monitored daily peak 8-hour ozone concentration of 0.085 ppm or a violation of the 8-hour ozone NAAQS [4] is recorded at any monitor in the Evansville area after the redesignation of the Evansville area to attainment of the ozone NAAQS. The selected contingency measures will be adopted and implemented within 18 months after the close of the ozone season with the ozone data that trigger the need for the implementation of the contingency measure(s).

The maintenance plan estimates emissions through 2015, ten years after the year in which the State anticipated that EPA would complete rulemaking on the State's ozone redesignation request, as required by section 175A of the Clean Air Act. These VOC and $NO_X$ emission estimates are for point, area, and mobile sources in the Evansville area. The emissions estimates

[2] The 2005 ozone data have not been entered into AIRS, but have been quality assured by the State. The State has submitted a summary of the peak 2005 8-hour ozone concentrations at the request of the EPA to respond to public comments addressed in this final rule.

[3] Prior to implementing lower Reid vapor pressure gasoline requirements, the State of Indiana would have to be granted a waiver to address preemption requirements under section 211(c)(4)(C) of the Clean Air Act.

[4] On October 20, 2005, the Indiana Department of Environmental Management submitted a letter verifying the State's intent to implement an ''Action Level Response'' and the triggering of a requirement to select and implement contingency measures in the event of a violation of the 8-hour ozone NAAQS in several areas, including Vanderburgh and Warrick Counties.

demonstrate continued maintenance of the 8-hour ozone standard through 2015. The latest available emissions information was used to project the emissions. The mobile source emissions estimates were developed using the MOBILE6 emission factor model. The State has committed to update the maintenance plan and maintenance demonstration eight years after the redesignation of the Evansville area to attainment of the 8-hour ozone NAAQS to demonstrate maintenance of the standard for an additional ten years, through 2025.

*C. Approval and Finding of Adequacy of VOC and $NO_X$ Motor Vehicle Emission Budgets for the Evansville Area*

EPA finds as adequate and approves the 2015 MVEBs of 4.20 tons per day for VOC and 5.40 tons per day for $NO_X$ for the Evansville area in the State-adopted ozone maintenance plan. These MVEBs have been addressed through the appropriate public involvement and review process without receiving adverse comment. These MVEBs meet the adequacy criteria, 40 CFR 93.118(e)(4), and are approvable as part of the 8-hour ozone maintenance plan. The approved 2015 MVEBs will replace the MVEBs currently used for transportation conformity analyses and demonstrations, as detailed in our September 9, 2005 proposed rule, upon the effective date of this rule. The newer MVEBs, which are being approved as part of the 8-hour ozone maintenance plan, are consistent with the goals of section 110(l) of the Clean Air Act because they set a tighter cap on mobile source VOC and $NO_X$ emissions for transportation conformity purposes, thereby limiting growth in mobile source emissions allowed in the area's transportation plan.

Subsequent to the effective date of this rule, the State of Indiana and local planning agencies in the Evansville area will have to use the 2015 MVEBs in all transportation conformity analyses and demonstrations.

*D. Effective Date of These Actions*

These actions will become effective 30 days after today's publication of this final rule in the **Federal Register**.

## III. Why Are We Taking These Actions?

EPA has determined that the Evansville area has attained the 8-hour ozone standard. EPA has determined that the State of Indiana has demonstrated that all other criteria for the redesignation of the Evansville area from nonattainment to attainment of the 8-hour ozone NAAQS have been met. EPA is fully approving the ozone maintenance plan for the Evansville area as meeting the requirements of sections 175A and 107(d) of the Clean Air Act.

In the September 9, 2005 proposed rule at 70 FR 53606, EPA described the applicable criteria for redesignation to attainment. Specifically, section 107(d)(3)(E) of the Clean Air Act allows for redesignation provided that: (1) The Administrator determines that the area has attained the applicable NAAQS; (2) the Administrator has fully approved the applicable implementation plan for the area under section 110(k) of the Clean Air Act; (3) the Administrator determines that the improvement in air quality is due to permanent and enforceable reductions in emissions resulting from the implementation of the applicable state implementation plan, applicable Federal air pollution control regulations, and other permanent and enforceable emission reductions; (4) the Administrator has fully approved a maintenance plan for the area as meeting the requirements of section 175A of the Clean Air Act; and, (5) the state containing such area has met all requirements applicable to the area under section 110 and part D of the Clean Air Act.

EPA has determined that the Evansville area has attained the 8-hour ozone NAAQS. EPA has approved all requirements in the Indiana SIP applicable to the Evansville area under section 110(k) of the Clean Air Act for purposes of redesignation. EPA has determined that the improvement in ozone air quality in the Evansville area is due to permanent and enforceable emission reductions resulting from the implementation of the Indiana SIP, applicable Federal air pollution control regulations, and other permanent and enforceable emission reductions. EPA is fully approving an ozone maintenance plan for the Evansville area meeting the requirements of section 175A of the Clean Air Act. Finally, EPA concludes that the State of Indiana has met all requirements applicable to the Evansville area under section 110 and part D of the Clean Air Act for purposes of redesignation. Therefore, EPA concludes that the State of Indiana and the Evansville area have met all requirements applicable to the Evansville area for purposes of redesignation to attainment of the 8-hour ozone NAAQS under section 107 of the Clean Air Act.

By finding that the ozone maintenance plan provides for maintenance of the 8-hour ozone NAAQS through 2015, EPA is hereby finding adequate and approving the 2015 VOC and $NO_X$ MVEBs contained in the maintenance plan. The MVEB for VOC in the Evansville area is 4.20 tons per day, and the MVEB for $NO_X$ in the Evansville area is 5.40 tons per day.

The rationale for these findings and actions is stated in this rulemaking and in more detail in the September 9, 2005 proposed rule, found at 70 FR 53605.

## IV. What Are the Effects of These Actions?

Approval of the Indiana redesignation request changes the official designation for the 8-hour ozone NAAQS found at 40 CFR part 81 for Vanderburgh and Warrick Counties, Indiana from nonattainment to attainment. It also incorporates into the Indiana SIP a plan for maintaining the 8-hour ozone NAAQS through 2015. The maintenance plan includes contingency measures to remedy any future violation or threatened violation of the 8-hour ozone NAAQS in the Evansville area, and includes VOC and $NO_X$ MVEBs for 2015 for the Evansville area.

## V. What Comments Did We Receive and What Are Our Responses?

We received comments from eight individuals and organizations responding to the September 9, 2005 proposed rule. Six of the commenters submitted comments critical of various portions of the proposed rule. One of the critical commenters included a petition signed by 125 individuals asserting that the Evansville area has an air quality problem requiring cleanup by the State and opposing a State lawsuit against the EPA.[5] One commenter, the Vanderburgh County Ozone Officer, supported the proposed rule, and provided additional data and analyses to support the proposed rule. Another commenter supported the proposed rule. A summary of the comments and EPA's responses to them are provided below.

*Comment 1: Air Quality in 2005 Shows That the Evansville Area Continues To Have an Ozone Problem*

A number of commenters have expressed the concern that the current air quality in the Evansville area does not warrant redesignation to attainment of the 8-hour ozone standard. These commenters focused primarily on the following: (1) A number of ozone alerts[6]

[5] The nature of the State lawsuit against the EPA is not defined in the signed petition.

[6] Ozone alerts are issued based on monitored ozone concentrations approaching or exceeding the standard and forecasted meteorology favoring the formation of high ozone concentrations. Ozone alerts are intended to alert the public to the potential for high ozone concentrations. Ozone alerts are not necessarily associated with ozone standard exceedances. Some ozone standard

were issued for southwestern Indiana during the summer of 2005; (2) certain days in 2005 had high ozone concentrations but lacked ozone alerts; (3) high levels of fine particulates ($PM_{2.5}$[7]) occurred on a number of days in 2005; and (4) the presence of haze and gray skies in southern Indiana during 2005 indicated an ongoing air quality problem. The commenters questioned whether air quality had improved enough to justify redesignation and expressed a further concern that a redesignation to attainment would result in the removal of air quality monitoring equipment from the area.

In addition, one commenter, Joanne M. Alexandrovich, Ph.D., Vanderburgh County Department of Public Health's Ozone Officer, expressed support for EPA's redesignation proposal. In so doing, she provided 2005 ozone data for Posey, Vanderburgh, and Warrick Counties showing that the Evansville area continues to meet the 8-hour ozone standard. This includes data containing peak 8-hour ozone concentrations for each monitoring site in the area for 2005 and three-year ozone design values for each monitoring site for the period of 2003–2005. Dr. Alexandrovich also presented ozone concentration trends data for each of the monitoring sites for the period of 1995–2005 to demonstrate a robust downward trend in ozone design values at all monitoring sites in the area, including at the Yankeetown site (the site on the property of Alcoa, Incorporated (Alcoa), see Comment/Response 2 below) and at other sites in Warrick County, where the worst-case ozone monitors in the area are located.

Dr. Alexandrovich notes that there were four exceedance days in the vicinity of the Evansville area in 2005 (three in the Evansville area and one in Posey County) and that the exceedances were recorded at several sites, with only one site (Boonville High School in Warrick County) recording exceedances on two days, and with no sites recording exceedances on three or more days. This shows that the fourth-high daily peak 8-hour ozone concentrations at all monitors in the area in 2005 were below 0.085 ppm (a monitored exceedance level cutoff). Finally, Dr. Alexandrovich provided information regarding the dates of ozone alerts and high ozone concentrations in 2005. These data show that ozone alerts were issued on eight days in 2005, with only two of the alert days actually having exceedances of the 8-hour ozone standard. Two days without ozone alerts also had ozone standard exceedances, one in the Evansville area and the other in Posey County. Most ozone alert days had relatively high peak ozone concentrations, but had peak ozone concentrations which failed to reach ozone standard-exceedance levels.

*Response 1*

In determining whether the 8-hour ozone standard is met, the 8-hour ozone standard requires the use of the three most recent, consecutive calendar years of monitoring data. 40 CFR 50.10, appendix I, parts 2.2 and 2.3. Thus, EPA has determined that the Evansville area has attained the 8-hour ozone standard based on the data for the period of 2002–2004. EPA has also reviewed quality assured data for 2005 provided by the Indiana Department of Environmental Management (IDEM), and has determined that they show that the Evansville area continued to attain the 8-hour ozone standard through 2005. The quality assured peak ozone concentrations for 2005 are summarized in Table 1 by monitoring site as submitted by the State.

TABLE 1.—PEAK 2005 8-HOUR OZONE CONCENTRATIONS IN THE EVANSVILLE AREA IN CONCENTRATIONS OF PPM

| Site | County | First High | Second High | Third High | Fourth High |
|---|---|---|---|---|---|
| Evansville—Mill Road | Vanderburgh | 0.090 | 0.081 | 0.081 | 0.080 |
| Scott School—Inglefield | Vanderburgh | 0.058 | 0.057 | 0.057 | 0.056 |
| Booneville High School | Warrick | 0.096 | 0.085 | 0.081 | 0.080 |
| Dayville | Warrick | 0.083 | 0.078 | 0.077 | 0.077 |
| Tecumseh High School—Lynnville | Warrick | 0.082 | 0.078 | 0.077 | 0.076 |

Although a number of ozone alerts were issued for Southwestern Indiana during the summer of 2005, quality assured data supplied by the State show that no monitors recorded fourth-high ozone concentrations above the 8-hour ozone standard. In addition, the 2003–2005 ozone design values for all monitors in the Evansville area were below the ozone standard violation cut-off level (below 0.085 ppm). Table 2 documents the 2003–2005 ozone design values by monitoring site in the vicinity of Evansville.

TABLE 2.—8-HOUR OZONE DESIGN VALUES IN THE EVANSVILLE AREA IN CONCENTRATIONS OF PPM FOR 2003–2005[1]

| Monitoring Site | County | Ozone Design Value |
|---|---|---|
| Evansville—Mill Road | Vanderburgh | 0.077 |
| Scott School—Inglefield | Vanderburgh | 0.063 |
| Boonville High School | Warrick | 0.076 |
| Tecumseh High School—Lynnville | Warrick | 0.073 |

[1] Ozone was also monitored at the Yankeetown-Alcoa and Dayville monitoring sites (both in Warrick County) during the period of 2003–2005. Ozone was monitored during 2003 and 2004 at the Yankeetown site, with an average fourth-high 8-hour daily maximum ozone concentration of 0.078 ppm. Ozone was monitored during 2005 at the Dayville site, with a fourth-high 8-hour daily maximum ozone concentration of 0.077 ppm.

These data show that no violations of the 8-hour ozone standard were monitored in the Evansville area even when 2005 ozone data are considered. This is true despite the commenters' observation that a number of ozone

exceedances simply fail to develop as forecasted. In addition, as the result of the ozone action alerts, some companies and individuals change operations or activities, lowering emissions, and possibly averting ozone standard exceedances.

[7] Particulate matter with nominal aerodynamic diameters of 2.5 micrometers or less.

alerts were issued in 2005 for this area. In addition, as noted by one of the commenters, ozone alerts were issued on eight days, but only two of these alert days had monitored exceedances of the ozone standard. On only two days lacking ozone alerts were ozone standard exceedances monitored (only one of these was in the Evansville area, with the other in Posey County, outside of the ozone nonattainment area [8]). Only one monitoring site, Boonville High School, recorded multiple days of ozone standard exceedances in 2005, but did not record a violation of the 8-hour ozone standard during the period of 2003–2005. No monitors in the Evansville area have recorded violations of the 8-hour ozone NAAQS based on the three most recent years of quality assured monitoring data.[9]

A number of states and local area governments, including Indiana and Evansville, have chosen to activate ozone alerts when ozone concentrations are thought to be approaching the ozone standard and meteorological conditions are forecasted to be favorable for the formation of high ozone levels. Besides alerting the public to the potential for high ozone concentrations and to the potential for the need to change outdoor activities to avoid exposure to these high ozone levels, the ozone alerts also inform owners of ozone precursor emitting sources and the public that operations and activities should be altered if possible to mitigate the ozone precursor emissions. This reduces the potential for high ozone concentrations, and helps avoid violations of the ozone NAAQS. Therefore, even though ozone action alerts were issued on a number of days in 2005, this is not an indication of a violation of the ozone standard, as demonstrated by the 2003–2005 ozone data for the Evansville area. The quality assured monitoring data for 2002–2004 show that the Evansville area attained the 8-hour ozone standard, and the quality assured 2003–2005 ozone data show that the area continues to attain the ozone standard. EPA is correct in determining that the Evansville area has attained the ozone standard, thus satisfying the criterion for redesignation pursuant to section 107(d)(3)(E)(i) of the Clean Air Act.

The 8-hour ozone design values submitted by Dr. Alexandrovich also show that ozone air quality has improved in the Evansville area. Ozone design values for all sites for the period of 1995–2005 show a significant downward trend, as noted by the commenter. The areawide ozone design value for 2002–2004 was 0.083 ppm and the areawide ozone design value for 2003–2005, based on the average of the fourth-highest daily maximum 8-hour ozone concentrations for this period, was 0.077 ppm. The data show several aspects of special note. All sites in the Evansville area exhibit essentially the same downward trend in ozone design values. This shows that an ozone problem has not simply shifted from one monitor site/area to another. In addition, the similar trends in ozone design values show that the peak ozone concentrations are reacting to common effects, including long-term downward trends in regional ozone precursor emissions. An increase in the downward trend of the ozone design values in the period of 2003–2005 at all monitoring sites implies that the decrease in regional $NO_X$ emissions resulting from EPA's $NO_X$ SIP call and other regional emission reductions are having a beneficial impact on ozone levels on a regional basis. See the response to Comment 10 below. As this commenter notes and we agree, the trend toward decreasing ozone design values is not expected to reverse in the near future as additional reductions in regional emissions are expected to result through the implementation of federally enforceable emission controls on vehicles, fuels, electric utilities, and other major combustion sources.

To demonstrate the downward trend in ozone design values, Table 3 summarizes ozone design values by monitoring site for the most recent three three-year periods taken from the quality assured ozone data supplied by the State.

TABLE 3.—8-HOUR OZONE DESIGN VALUES FOR PERIODS OF 2001–2003, 2002–2004, AND 2003–2005 IN CONCENTRATIONS OF PPM

| Monitoring Site | 2001–2003 | 2002–2004 | 2003–2005 |
|---|---|---|---|
| Evansville—Mill Road | 0.083 | 0.082 | 0.077 |
| Scott School—Inglefield | 0.077 | 0.073 | 0.063 |
| Alcoa—Yankeetown | 0.085 | 0.083 | NA |
| Dayville | NA | NA | [1] 0.077 |
| Boonville | 0.081 | 0.080 | 0.076 |
| Tecumseh High School | 0.081 | 0.078 | 0.073 |

[1] The Dayville site is only several miles from the discontinued Alcoa-Yankeetown site and is a replacement for the Alcoa monitor. The ozone design value given here is the fourth-high daily maximum 8-hour ozone concentration for 2005, the only year of monitoring data currently available for this monitoring site.

With regard to the claims of high $PM_{2.5}$ levels, it is noted that this rulemaking addresses only the ozone designation of the Evansville area. This rule does not address or affect the $PM_{2.5}$ designation for this area, and, thus, the $PM_{2.5}$ concentrations in this area have no bearing on EPA's determinations regarding the attainment status of this area for the 8-hour ozone NAAQS.

The comment concerned with the ending of monitoring in the Evansville area upon redesignation to attainment of the ozone NAAQS is wrong for several reasons. First, and most importantly, the State of Indiana has committed to continuing ozone monitoring in this area. See 70 FR 53613 (September 9, 2005). Second, the ozone maintenance plan requires and depends on continued ozone monitoring during the lifetime of the maintenance plan. Note that the ozone maintenance plan contains action triggers directly tied to ozone monitoring. Under the approved

[8] Even though 8-hour ozone standard exceedances have been monitored in Posey County, this County is not in violation of the 8-hour ozone standard.

[9] Occasional exceedances of the standard are allowed at any monitor without a violation of the 8-hour ozone NAAQS occurring. As long as the average annual fourth-high daily maximum 8-hour ozone concentrations at all relevant ozone monitoring sites in an area remain at or below 0.084 ppm for the most recent three-year period, the area is not violating the 8-hour ozone NAAQS. With multiple monitoring sites in an area, multiple exceedance days (exceedance of the standard anywhere in the monitoring system) may occur during any period without a violation of the ozone NAAQS actually occurring. That was the case for the Evansville area for 2005 and for the period of 2003–2005. Despite three exceedance days, the area continued to attain the standard, the relevant criterion for our determination of attainment and one of the criteria for redesignation to attainment.

maintenance plan, ozone levels will be tracked and certain corrective actions or further analyses will be triggered if monitored ozone concentrations reach specified levels. To implement the ozone maintenance plan, the State must continue ozone monitoring in the Evansville area.

With regard to haze and gray skies in southern Indiana, this issue also is not relevant to a redesignation of the area for the ozone standard, where the area has been shown to be attaining the 8-hour ozone standard. A number of pollutant sources lead to the formation of fine particulates, which can contribute to haze levels. Since the Evansville area is a nonattainment area for fine particulates, the State of Indiana is expected to assess the sources of the emissions leading to these fine particulates and to develop strategies and emission control regulations leading to attainment of the fine particulates standards. In doing so, the State's actions should also lead to reductions in haze levels and to cleaner skies. In addition, regional emission reductions achieved through EPA's $NO_X$ SIP call and Clean Air Interstate Rule (CAIR) will further lower haze levels and clear the skies of this area.

With regard to the claim that the State and the City of Evansville failed to issue an ozone alert when it would have been warranted, the record of ozone alerts provided by Dr. Alexandrovich shows more overpredictions of high ozone levels than underpredictions (more issued ozone alerts on days with no ozone standard exceedances than failures to issue ozone alerts on days with ozone standard exceedances). This claim is also irrelevant to a redesignation action, which is based on demonstrated attainment of the standard. There is no evidence to support the claim that actions with respect to prior ozone alerts call the maintenance plan into question. The maintenance plan contains corrective actions that will occur if high ozone levels are monitored, and does not conflict with or depend upon the State's plans for issuing ozone alerts in the future. The fact that there were ozone alerts also does not indicate that the area violated the ozone standard. The ozone maintenance plan is designed to provide corrective actions if high ozone levels or violation of the standard occur after redesignation of the area to attainment of the NAAQS. The maintenance plan's contingency measures are triggered by monitored ozone levels. The triggering of the contingency measures in no way depends on the forecasting of high ozone concentrations. Therefore, the issuing of ozone alerts is in no way connected to the implementation of the ozone maintenance plan. The maintenance plan relies on monitored ozone data and not on forecasted concentrations. Regardless of the status of the ozone alert efforts, the relevant issue for redesignation is that the Evansville area has attained the 8-hour ozone NAAQS and has an approved plan for maintaining the ozone standard.

*Comment 2: The Critical Ozone Monitor at the Alcoa, Incorporated Site Is No Longer Operating, Resulting in the Loss of Data That Would Have Been a Violation of the Ozone Standard in 2005*

A commenter notes that Alcoa, Incorporated (Alcoa) had sought the ozone redesignation while, at the same time, asking that the ozone monitor on its property be terminated and/or relocated to another site. This is a particular concern to the commenter since the Alcoa monitor (which was shut down in October 2004) was the monitor that had recorded the ozone standard violation on which the 2004 Evansville area ozone nonattainment designation had been based. The commenter believes that, had the monitor been left on the Alcoa property, it would likely have continued to show a violation of the ozone NAAQS during the summer of 2005. This commenter also suggests that this redesignation request was originated by Alcoa. Finally, the commenter believes that EPA and the State are taking the approach of ''no data, no problem.''

*Response 2*

The Alcoa (Yankeetown) monitor operated through the end of the 2004 ozone season. Data from the Alcoa monitor were considered both in designating the Evansville area as nonattainment based on 2001–2003 data and in EPA's determination that the area attained the 8-hour ozone standard based on 2002–2004 data. The State considered this monitor to represent ambient air and requested Alcoa to quality assure the data from this site, meeting State monitoring standards, so that these data could be considered to be on par with the ozone data from other monitors in the Evansville area and in the State. Alcoa disagreed with the State, arguing that this monitor does not represent ambient air. Alcoa objected to and challenged the designation of the Evansville area as an 8-hour ozone nonattainment area based on the ozone monitoring at the Alcoa site. Alcoa terminated the monitor at the end of the 2004 ozone season and the State located a new ozone monitor very close to the Alcoa site, but off the premises of Alcoa. This new monitor, the Dayville site, was operated in 2005.

Prior to the establishment of the Dayville ozone monitoring site, EPA was given the opportunity to review the characteristics of the Dayville site relative to the characteristics of the Alcoa site. The proximity of the two monitoring sites and the similarity of the emissions near the monitoring sites (particularly the similarity and spatial distribution of $NO_X$ emissions close to the monitoring sites) led us to the conclusion that the two monitoring sites were equivalent. We have seen no data to the contrary.

The ozone trends data provided by Dr. Alexandrovich, as discussed in Comment/Response 1, indicate that the Dayville monitoring data may be generally considered in conjunction with the Alcoa data to assess the long-term trend in the 8-hour ozone data for this area. The Alcoa/Dayville ozone data show an ozone trend very similar to the ozone trends for other monitors in the Evansville region. The 2005 data for Dayville fit well with the prior data for the Alcoa site to produce an ozone trend that matches those from other long-term sites in the area. If the Dayville site was significantly different in local emission characteristics and ozone response relative to the Alcoa site, one might expect the short-term ozone trend (2004–2005) for this site pair to be significantly different from the ozone trends for the long-term sites. This is not the case. Based on this observation and considering the close proximity and similarities of the Alcoa and Dayville monitoring sites and the fact that the Dayville monitor recorded a fourth-high daily maximum 8-hour ozone concentration of 0.077 ppm in 2005, we see no basis to assume or to speculate that the Alcoa site would have recorded a violation of the 8-hour ozone standard based on 2003–2005 ozone data. Therefore, we disagree with the commenters on this point.

EPA can base its determination on whether the standard has been met only on available ozone monitoring data and not on speculation. There is no evidence that air quality at the Alcoa monitor would have violated the 8-hour ozone standard in 2005. On the contrary, the data show no violation of the ozone standard during the period of 2002–2004 for the Alcoa monitor, and no exceedances of the 8-hour ozone standard at the replacement Dayville monitor in 2005. If anything, the available data indicate that the Alcoa site would not have violated the 8-hour ozone standard in 2005. At minimum, we cannot conclude that a violation of

the 8-hour ozone standard would have been recorded at the Alcoa monitor in 2005. The termination of the Alcoa monitor and its replacement by the Dayville monitor do not affect the eligibility of the Evansville area to qualify for redesignation. The available ozone data support this redesignation, and the State has demonstrated that the area has attained the 8-hour ozone NAAQS.

While EPA acknowledges that Alcoa chose to discontinue monitoring on its property, it is the State of Indiana—and not Alcoa—that developed, adopted, and submitted the ozone redesignation request. As discussed above, EPA believes that the new, nearby ozone monitor at Dayville provides ozone data equivalent those produced by the Alcoa-Yankeetown monitor.

The State is not exhibiting an attitude of ''no data, no problem,'' and has replaced the terminated Alcoa monitoring site with the Dayville monitoring site. The State has supported the original 8-hour ozone nonattainment designation for Warrick County (the county in which the Alcoa site was located), and has supported maintaining an ozone monitor in this area, recognizing that this area has a potential for relatively high ozone concentrations. This is why the Dayville ozone monitoring site was selected and implemented.

EPA is not taking the approach of ''no data, no problem.'' First, EPA (along with the State) considered the data from the Alcoa site in both its original ozone designation of the area and in determining that the area subsequently attained the 8-hour ozone standard. Second, EPA has routinely required states to operate and maintain adequate ozone monitoring networks to record ozone concentrations and to maintain such networks after redesignation to assure maintenance of the standard. EPA's guidance provides that an area's maintenance plan should contain provisions for continued operation of air quality monitors to verify continued attainment, and that the state should continue to operate an appropriate air quality monitoring network in accordance with 40 CFR part 58. Memorandum of John Calcagni, ''Procedures for Processing Requests to Redesignate Areas to Attainment,'' September 4, 1992. The State has committed to continue operating an appropriate monitoring network in the Evansville area. IDEM has committed to continue operating and maintaining an approved ozone monitoring network in accordance with 40 CFR part 58 through the 10-year maintenance period.

*Comment 3: High Ozone Concentrations Have Been Monitored in Downwind Perry County, and This Monitoring Site Should Be Considered in This Ozone Redesignation Review as Part of the Evansville Area*

Several commenters expressed concerns about high ozone concentrations monitored at the Leopold monitor in Perry County. The commenters believe that during the first two years that the Leopold monitor was operated, it showed exceedances of the 1-hour ozone standard. Because the monitor was removed before it collected three years of ozone data, the data for this monitoring site were not used to designate Perry County as nonattainment for the 1-hour ozone standard. The monitor has been replaced, although at a different site, and the new monitor has recorded exceedances of the 8-hour ozone standard, but has not collected three years of data showing a violation of the 8-hour ozone NAAQS. The commenters believe that the Leopold monitoring site should be considered to be part of the Evansville area, and that the Leopold data should be considered in EPA's determination of the ozone attainment status for the Evansville area. One of these commenters wants a commitment from the EPA that the Leopold monitor will become part of the Evansville ozone monitoring network, and that such action will be considered as part of the ozone maintenance plan addressed in EPA's final rule on Indiana's ozone redesignation request.

Dr. Alexandrovich, the Vanderburgh County Ozone Officer, notes that an ozone monitor was operated in Perry County from 1998 through 2001, Aerometric Information Retrieval System (AIRS) site 18–123–0008. Although ozone levels were elevated at this site, no exceedances of the 1-hour ozone standard were monitored at this site through the 2001 ozone season. After the 2001 ozone season (April–September in Indiana), this monitoring site was shut down. In 2004, a new monitoring site was established at Leopold, AIRS site 18–123–0009. In 2005, this monitor recorded exceedances of the 8-hour ozone standard on four days.[10] Analyses of wind speeds and directions by hour (transport analyses) for the high ozone days in 2005 show that the Evansville area was not a likely source area for the ozone standard exceedances on three of the four days.

*Response 3*

The Leopold monitoring site should not be considered to be part of the Evansville area. The boundary of the Evansville nonattainment area was set in EPA's designation rulemaking of April 30, 2004, and EPA is not re-visiting that rulemaking in this final rule. In its designation rulemaking, EPA evaluated the boundary of the Evansville nonattainment area in accordance with the statute, EPA guidance, and the criteria that EPA applied nationally, and we considered all relevant factors. See 69 FR 23858. Perry County, located to the east and separated from the Evansville area by Spencer County, is designated as attainment for the 8-hour ozone standard. See 40 CFR 81.315. There is no showing that Perry County is monitoring a violation of the 8-hour ozone standard. There is, thus, no possibility of showing that the Evansville area is contributing to a violation of the ozone standard in Perry County.

As noted by Dr. Alexandrovich, wind speed and direction analyses for high ozone days in 2005 indicate that the Evansville area emissions may be impacting the Leopold monitoring site on only one out of four exceedance days during 2005 at this site. Areas south and east of the Leopold monitor (and not west in the direction of the Evansville area) appear to be the primary emission source areas that may be affecting Perry County on three of the four exceedance days. These data show that the Evansville area cannot be held responsible for the majority of the days on which there are high levels of ozone at the Leopold monitoring site. It appears that a number of other ozone precursor source areas in Indiana, Kentucky, and other upwind areas may be affecting ozone concentrations in Perry County.

For all of these reasons, we disagree with the commenters' assertions that Perry County should be part of the Evansville area and that the Leopold monitoring data should change EPA's decisions on the attainment and maintenance status of the Evansville area.

The 1-hour ozone concentrations monitored in Perry County have no bearing on our decision regarding the attainment status of the Evansville area for the 8-hour ozone NAAQS. We are not considering 1-hour ozone concentrations in any decision regarding 8-hour ozone redesignations. In addition, as of June 15, 2005, the 1-

[10] No exceedance of the 8-hour ozone standard was monitored at this site in 2004. The average fourth-high daily maximum 8-hour ozone concentration for this site is 0.082 ppm for the period of 2004–2005 based on quality assured data supplied by the State.

hour ozone NAAQS was revoked and no longer exists.

There is no showing that Perry County and the other Counties cited by the commenters are monitoring violations of the 8-hour ozone standard. Therefore, neither EPA nor the State is failing to disclose a current violation of the standard in this area. Monitored air quality data for Perry County are available to the public through AIRS or through the State's data system and air quality data summaries. In addition, it should be noted that the adequacy of monitoring in areas which are outside of the Evansville area, and which have not been shown to affect the determination of attainment in the Evansville area, is not relevant to this rulemaking.

*Comment 4: There Was Unusually Cool Meteorology in 2003 and 2004 That Led to Abnormally Low Peak Ozone Concentrations*

Several commenters have asserted that the Evansville area experienced unusually cool weather in 2003 and 2004, and that EPA should consequently reject the State's redesignation request. A commenter further states that redesignation guidance issued by the EPA in September 1992 is clear in requiring that a redesignation to attainment must not be a result of ''unusual meteorology.'' On the other hand, 2002 data show clear exceedances of the 8-hour ozone standard. This commenter also believes that the summer of 2005 clearly shows that, under the right conditions, the Evansville Metropolitan Statistical Area (MSA) will continue to exceed the 8-hour ozone standard.

Another commenter, Dr. Alexandrovich, notes that meteorological statistics indicate that over the last 10 years, with a few exceptions, the weather in the Evansville area was within normal ranges. The commenter presents data on the departure of daily average temperatures from normal daily temperature averages, the departure of monthly average temperatures from normal monthly average temperatures, and the departure of monthly precipitation levels from normal monthly precipitation levels for the April through September periods of 1995 through 2005 to support conclusions regarding whether 2003 and 2004 were atypical years unusually favorable to lower peak ozone concentrations. The commenter also documents the ozone standard exceedance days with respect to departures of daily average temperatures from normal daily average temperatures. The data, in the accumulative, indicate that: (1) The weather in 2003 and 2004 was not atypically colder or drier/wetter than the weather during the ozone seasons in other years during the period of 1995–2005; (2) ozone standard exceedance days were not limited to days with atypically high temperatures; and (3) ozone exceedance trends (in number of exceedance days per year) were not associated with year-to-year trends in peak daily temperatures or precipitation. In other words, meteorological trends or deviations from normal meteorological conditions cannot explain the observed trends in peak ozone concentrations. This leaves one to conclude that the downward trend in peak ozone concentrations in the Evansville area is due to emission decreases in this area or in the surrounding region.

*Response 4*

As part of the State's ozone redesignation request, the State documented a temperature analysis conducted to show that unusually favorable meteorology was not responsible for the observed air quality improvement. In this analysis, the State considered temperatures during the ozone-conducive months of May through September for the period of 1971–2000 versus the same months during the attainment period, 2002–2004. Temperature data were reviewed for a number of weather stations, including Indiana weather stations at: Bloomfield; Boonville; Dubois; Freelandville; Huntingburg; Mount Vernon; Shoals; Saint Meinrad; and Washington, along with temperature data supplied by the Evansville National Weather Service office. The temperature data were used to calculate the monthly average number of 90 degree days [11] during the period of 1995–1999. Temperature data were also used to determine the monthly normal maximum temperatures for the summer months for the period of 1971–2004. Monthly maximum temperatures were compared by month for various years for 1996 through 2004. Based on these analyses, it was concluded that the temperatures during the 2002 summer months of May, June, July, August, and September, were 1 to 2 percent higher than the long-term monthly norms, while the monthly maximum temperatures during the 1996, 1997, 2000, 2001, 2003, and 2004 summer months were 1 to 5 percent lower than the long-term averages. On average, the monthly maximum temperatures in the summer months of 2003 and 2004 were 3 percent and 2 percent below the long-term averages, respectively, whereas, on average, the monthly maximum temperatures in 2002 were 2 percent higher than the long-term averages. It should be noted that monthly maximum temperature ranges (when compared to the long-term monthly average maximum temperatures) were essentially identical between the 2001–2003 period used to designate the Evansville area as nonattainment for the 8-hour ozone NAAQS and the 2002–2004 attainment period. This is one indicator that temperature differences between various years were not the key factor in the observed air quality improvement.

The State also compared the number of 90 degree days during the summer months for each year during the period of 1995–2004 to the ''normal'' number of such days (the average for all years in this period) for the Evansville Regional Airport. The State compared these data to the number of 8-hour ozone standard exceedance days for each year. These data point to 2002 as being an abnormally warm summer, having a higher than average number of ozone standard exceedance days, whereas 2003 and 2004 were below average in warm summer days, but with numbers of ozone standard exceedance days more indicative of the averages during the period of 2000–2004, excluding 2002. The State concludes from these data that a greater number of ozone exceedance days per year correlates with a greater number of 90 degree days per year. This analysis supports a connection between meteorology and the number of ozone standard exceedance days per year, but does not support or address the case that 2003 and 2004 were atypically cool years. The State does conclude that, based on long-term trends, the annual number of 8-hour ozone standard exceedance days shows a greater downward trend than the annual number of 90 degree days. That is, the local summer climate is cooling, but the ozone air quality is improving at a faster rate, implying that emission decreases are responsible for the air quality improvement rather than the long-term change in meteorology.

To further consider this issue, we refer to the temperature and precipitation analyses documented by Dr. Alexandrovich (other commenters made assertions without providing supporting data). This commenter analyzed the ozone season departure of daily average temperatures from normal and the long-term daily average temperatures for each year during the

[11] Days with peak temperatures equal to or greater than 90 degrees Fahrenheit at any of the meteorological monitoring sites considered.

period of 1996–2005. This analysis also indicated the departures of daily average temperatures on 8-hour ozone standard exceedance days during this period. Considering temperature variations throughout the ozone seasons, the commenter concluded that 2003, 2004, and 2005 were not atypically colder during the ozone season than other years in the 1996–2005 period. No years showed departures of daily average temperatures outside of the typical meteorological variability range. Additionally, the commenter concluded that ozone standard exceedances occurred on days with both above and below average daily peak temperatures, but do preferentially occur over periods of increasing temperatures, reflecting the influence of warming air masses on increasing ozone levels.

Dr. Alexandrovich also analyzed the departures of average monthly temperatures and precipitation levels from normal levels during the ozone seasons for the period of 1995–2005 along with the annual number of 8-hour ozone standard exceedance days for this period. This analysis failed to show any connection between monthly average temperatures and monthly precipitation and the annual number of ozone standard exceedance days. This commenter concludes that the weather over the last 10 years in the Evansville area was within normal ranges and no ''unusually favorable meteorology'' influenced the downward trend in peak ozone levels (towards cleaner air).

Given the data supplied by the State and Dr. Alexandrovich and the lack of data countering their conclusions, we see no support for the commenter's claim that the improvement in ozone air quality was due to unusually favorable meteorology. See the John Calcagni memorandum at 4. We agree that meteorology does influence peak ozone concentrations, but we see greater evidence in this case that emission reductions, both local and, more significantly, regional, were responsible for the reduction in peak ozone concentrations leading to attainment of the 8-hour ozone NAAQS. See our response to Comment 10 below. Therefore, we disagree with the commenters that unusually favorable meteorology led to attainment of the ozone NAAQS.

*Comment 5: The Maintenance Plan Failed To Address Surrounding Counties, and Emission Increases in These Surrounding Areas and in the Evansville Area Will Threaten Maintenance of the Ozone Standard*

A commenter questions why the maintenance plan did not include the surrounding counties in the Evansville MSA and why the surrounding counties were not included in the original ozone nonattainment area.

A commenter asserts that, if EPA allows this redesignation, this will allow increases in pollution levels instead of reducing emissions as required by the Clean Air Act.

A commenter notes that there is nothing in the State's maintenance plan that deals with counties besides Warrick and Vanderburgh Counties. The commenter contends that additional counties should have been included in the original Evansville nonattainment area as required by EPA's designation guidance. The commenter claims that EPA's guidance required all of the counties in the MSA to be treated equally and to be included in the nonattainment area, and that EPA failed to follow its own guidance, excluding counties in Indiana and Kentucky from the nonattainment area that are part of the Evansville MSA. As a result of this, the commenter argues that nothing in the maintenance plan will apply to the ''other'' counties, whose emissions impact the ozone levels in the entire region.

A commenter asserts that the failure to include the other counties will bode poorly for the health of citizens in this region since new coal-fired power plants are proposed for Henderson County, Kentucky, just a few miles from the current ozone nonattainment area. The commenter claims that, had EPA followed its own guidance in establishing the original nonattainment area, the prospect of new coal-fired power plants for the region would have been different, if not impossible.

Several commenters demand that all counties in the Evansville MSA comply with the Indiana maintenance plan. The commenters believe that to let these counties ''off the hook'' when they have emission sources that are larger than anything in Vanderburgh County is outside of the spirit, legal guidance, and rules of the Clean Air Act. A commenter contends that Gibson and Posey Counties in Indiana and Henderson County in Kentucky should also be included in the maintenance plan for the Evansville area.

A commenter questions whether EPA and IDEM considered the impact of several new power plants proposed for the region, including a ''giant'' 1500 megawatt old technology plant just upwind of the ozone nonattainment area in Kentucky that has already received an operating permit from the Kentucky Division of Air Quality. This commenter additionally notes that proposals for at least three additional large power plants are pending, one just northwest of the ozone nonattainment area, one to the north of the nonattainment area, and one just south of the nonattainment area in Henderson County, Kentucky. The commenter claims that these power plants, together with those already permitted, will likely make it impossible to maintain the attainment of the 8-hour ozone standard in the future.

A commenter contends that there are at least 15 coal-fired power plants in the Evansville region, and that these plants emit sulfur dioxide, nitrogen oxide, fine and course particulates, mercury, and hydrochloric acid. The commenter claims that it stands to reason, especially since the Evansville area is not in attainment according to EPA standards, that the Evansville area needs to have a monitor in place to ensure that the area's air quality is at safe levels needed for healthy, productive lives.

Another commenter expressed the hope that, if new coal-fired power plants are brought on line in the future, the older coal-fired plants will be phased out and clean coal technologies will be used.

One of the commenters raising concerns about the growth of new power plants in the area attached a copy of a ''Clean Air Petition to Governor Daniels.'' This document was signed by a number of citizens of Newburgh, Indiana, and expresses opposition to ''the state's lawsuit against the E.P.A.'' The nature of the State lawsuit against EPA is not specified in the petition, nor in the commenter's cover letter.

Finally, a commenter states that, aside from the potential for new power plants, an attainment designation would tell companies that they have done enough toward reducing their emissions. The commenter argues that companies will do no more than is necessary, and that power plants will not make any improvements to decrease emissions of carcinogens. The commenter asserts that people are beginning to see the problem in the Evansville area, that government agencies are failing the people.

*Response 5*

Regarding the issue of whether other counties should have been included in the Evansville ozone nonattainment area, as indicated above in the response to Comment 3, the appropriateness of

the designation of the area, which was promulgated on April 30, 2004, is not the subject of this rulemaking. EPA evaluated the designation of the Evansville area in accordance with the statute, EPA guidance, and criteria that EPA applied in designations nationally. EPA considered all appropriate factors and concluded that Vanderburgh and Warrick Counties were the appropriate area for the nonattainment area. See 69 FR 23858.

Regarding the issue of whether additional counties should be included in the maintenance plan, section 107(d)(3)(E)(iv) of the Clean Air Act provides that, in approving a redesignation request, the Administrator must have a ''fully approved a maintenance plan for the area'' as meeting the requirements of section 175A. Thus, EPA need only approve a plan adequate to cover the nonattainment area that is being redesignated. Nevertheless, EPA and the State also reviewed the emission levels in other southwestern Indiana counties and determined that further declines in emissions are projected there as well. In our proposed rulemaking, we considered the attainment year and projected year $NO_X$ emissions for five other counties in southwestern Indiana, and determined that emissions totals in these counties were projected to decrease during the Evansville area's ozone maintenance period (through 2015). See 70 FR 53612 (September 9, 2005). In addition, we note that ozone modeling conducted by the EPA and by the Lake Michigan Air Directors Consortium (LADCO) to support the Clean Air Interstate Rule (CAIR) for 2010 and 2015 shows that regional $NO_X$ emission reductions at electric generating units (power plants) in the eastern states will result in peak ozone reductions throughout the eastern states, and most importantly for the purposes of this rulemaking, throughout southwestern Indiana. CAIR will result in $NO_X$ emission reductions throughout southwestern Indiana that will contribute to the maintenance of the ozone standard in the Evansville area. See also response to Comment 10.

Other counties outside the maintenance area are not ''being let off the hook,'' as one commenter alleges, since they remain subject to the Clean Air Act requirements applicable to them and must demonstrate attainment of the 8-hour ozone standard. The fact that the counties are not included in the Evansville area ozone maintenance plan does not exempt these counties from the applicable requirements of the Clean Air Act with respect to attainment and maintenance of the 8-hour ozone standard. Thus, there is no requirement or need to extend the maintenance plan beyond the Evansville area.

Redesignation of the Evansville area is not expected to result in overall emissions increases. Redesignation does not relax any pollution control measures on existing sources in place at the time of the redesignation. Indiana has committed to maintaining all existing emission control measures that affect the Evansville area after redesignation. If the area were not redesignated, the only difference would be that the area would be subject to New Source Review (NSR) requirements under part D of title I for nonattainment areas, rather than the NSR requirements under part C of title I for attainment areas. This difference, however, does not mean that redesignation itself would result in increased emissions from the area. Note that the State demonstrated that overall emissions will decrease in the ten years following redesignation, even with part C NSR requirements. The maintenance plan also provides for contingency measures to be activated in the event that ozone levels increase to exceedance levels, so that, if increased emissions cause ozone air quality problems, implementation of new emission controls would be required.

With regard to power plants in the areas surrounding the Evansville area, several points are relevant to this set of comments. First, the existence of a number of power plants in the area has not prevented the Evansville area from achieving attainment of the 8-hour ozone standard. Despite the emissions from these power plants, the air quality in the Evansville area has improved to the point of attaining the 8-hour ozone standard. In fact, the reduction of regional $NO_X$ emissions at these power plants, as a result of EPA's $NO_X$ SIP call, is believed to be a significant contributor to the air quality improvement in the Evansville area. Second, the redesignation of the Evansville area to attainment will have no bearing on the implementation of the state $NO_X$ emission control rules resulting from the $NO_X$ SIP call and on the State's adoption and implementation of emission control rules resulting from CAIR. $NO_X$ emissions at the power plants will continue to be capped on statewide bases and states will have to account for new power plant emissions within these statewide emission caps. Finally, the designation of the Evansville area has little or no bearing on the permitting of new power plant emissions, particularly those in areas outside of Indiana. The impact of any new power plant on the area should be considered in the permitting process. Section 165(a)(3) of the Clean Air Act provides that there must be an air quality analysis to demonstrate that a proposed project will not cause or contribute to a violation of a NAAQS. Indiana has demonstrated that emissions inside of the Evansville area will remain at or below the attainment year levels through 2015, which indicates that the 8-hour ozone standard will be maintained during this period. As for the impact of emissions outside of the Evansville area, the commenters provided no analysis indicating that any such emissions would be likely to cause or contribute to violations of the ozone NAAQS in the future. In fact, $NO_X$ emissions projections for other counties within southwestern Indiana show that they are expected to decrease. See 70 FR 53612 (September 9, 2005). Furthermore, EPA notes that $NO_X$ emissions from proposed power plants will be subject to the regional $NO_X$ emission reduction requirements of the $NO_X$ SIP call and, in the future, CAIR. See 70 FR 25162 (May 12, 2005). Since Kentucky and Indiana are subject to these programs, sources subject to these programs and to the state rules that result from these programs will remain subject to $NO_X$ emissions budgets for the States that will not increase as a result of a possible new power plant. Consequently, new power plants will have to obtain $NO_X$ emission allowances from other existing sources subject to the $NO_X$ SIP call and/or CAIR, maintaining statewide $NO_X$ emissions from power plants at or below the statewide $NO_X$ emission budgets. Therefore, permitting of new power plants subject to these rules is not expected to result in increases in regional $NO_X$ emissions. In addition, this rulemaking concerns only the 8-hour ozone standard and does not address emissions for other pollutants. Sources remain subject to the statutory and regulatory requirements governing those pollutants.

In addition, as noted by a commenter, if new power plants are built in the future, they may utilize lower-emitting technologies as they replace older, less-controlled power plants. To the extent this occurs, regional emissions could be further reduced and not necessarily increased.

Finally, with regard to the petition to Governor Daniels, we believe that the referenced lawsuit against EPA is *Catawba County, North Carolina* v. *EPA,* Case No. 05–1064, and consolidated cases (D.C. Cir.). In that action, a number of parties (including State of Indiana) have challenged EPA's January and April 2005 designation of certain areas as nonattainment for the $PM_{2.5}$

NAAQS. As that matter deals solely with EPA's $PM_{2.5}$ designations, it is not relevant to the subject matter of this rulemaking, which concerns a redesignation for the 8-hour ozone standard.

*Comment 6: Serious Health Problems Occur at Ozone Concentrations Below 80 Parts Per Billion, and the Evansville Area Should Not Redesignate To Attainment Until the Area Meets a Tighter Ozone Standard*

Several commenters expressed their belief that serious health problems from ozone exposure occur at levels below the 0.08 ppm standard established by the EPA, noting that the State of California has adopted a 70 parts per billion (ppb) (0.07 ppm) ozone standard. One commenter added that EPA should adopt this tighter ozone standard, and should not redesignate the Evansville area to attainment until it has attained this more stringent standard. Another commenter stated his belief that EPA is considering the promulgation of a tighter ozone standard, and that it made no sense to redesignate the Evansville area to attainment only to shortly thereafter designate the Evansville area as nonattainment for the tighter ozone standard.

*Response 6*

The issue of whether EPA should adopt a tighter ozone standard is not part of this rulemaking. In this rulemaking, EPA is addressing the attainment status of the Evansville area for the 0.08 ppm ozone standard currently in effect. Under the Clean Air Act, EPA can determine the attainment status of areas based only on currently adopted air quality standards. The Clean Air Act does not provide for nonattainment designations based on air quality standards that have not been promulgated. See section 107(d)(3)(E) of the Clean Air Act.

If, after a future review of the available health data, the EPA revises the ozone standard, the Evansville area and other areas would be judged against that new standard. Redesignating the Evansville area to attainment of the current standard now would not prevent designating the Evansville area as a nonattainment area under the new standard if the available ozone monitoring data warrant such a designation. Until then, EPA can only judge the Evansville area under the current ozone standard.

*Comment 7: Political and Industrial Pressures Have Preempted Both Public and Environmental Health Concerns, and This Redesignation Will Allow More Emissions and Worse Air Quality*

A number of commenters asserted that the redesignation process was politically motivated, and that the State and EPA were more concerned about the area's economic status than about public health. Referring in part to comments made by local officials during a 2003 public hearing, they argued that political and industrial pressures have preempted public health and environmental concerns with little or no input from the affected public. One commenter questioned EPA's delegation of programs to Indiana. Another commenter asserted that EPA's action was inconsistent with EPA's mission to protect human health and the environment.

*Response 7*

The comments as to the motivation of State and Federal regulators are irrelevant to the issue of whether the Evansville area qualifies for redesignation under the Clean Air Act. The pertinent issue is whether the redesignation meets the applicable requirements and procedures. As discussed in greater detail in response to Comment 9, the State has complied with all of the substantive and procedural requirements established by Congress for redesignation pursuant to section 107(d)(3) of the Clean Air Act. This includes a determination that the area has attained the 8-hour ozone NAAQS, as evidenced by quality-assured monitoring data which show no NAAQS violations. It also includes a 10-year maintenance plan to ensure that the area continues to attain the NAAQS.

The State also complied with all applicable notice and hearing requirements prior to submitting the redesignation request and ozone maintenance plan to the EPA. Similarly, EPA followed the applicable procedures when it proposed action on September 9, 2005, and provided for the submission of written comments. Thus, the State and EPA have followed all statutory procedures for notice and public participation.

EPA has evaluated the State's submission in light of the applicable statutory criteria. After notice and consideration of the State's submission, the data, and all comments, EPA has determined that the area has attained the 8-hour ozone standard and that it meets the other criteria for redesignation to attainment set forth in the Clean Air Act. Contrary to a commenter's allegation, EPA is not working to ''mask the true state of nonattainment'' in the area, and is not ''conspiring'' to ''doctor'' or ''deny'' the scientific data on record. EPA has carried out its obligation to review the redesignation request in conformance with the statute and with all prescribed procedures. Contrary to a commenter's contention, EPA, in redesignating the area, is not giving ''deference to big polluters.'' Nor has EPA ignored or concealed monitored violations in the Evansville area. When the Evansville area monitored a violation of the 8-hour ozone standard, EPA took action to designate the area as nonattainment, as evidenced by the nonattainment designation promulgated for the area on April 30, 2004. As stated in the response to Comment 5, the redesignation action is not expected to cause overall emissions increases in the area.

Statements made during a state hearing in 2003 regarding the prospective designation of the area are irrelevant as to whether the area qualifies for redesignation to attainment based on subsequent air quality data, plan submissions, and rulemaking proceedings. In redesignating the area, EPA is acting in good faith and in accordance with the statute and applicable regulations and with all prescribed procedures, and in keeping with its obligations to administer the law in the public interest

To the extent that the comments reflect concern about new industrial growth in the area, EPA notes that statutory and regulatory requirements remain in place to ensure that such growth occurs in a manner consistent with today's action. In addition to the State's maintenance plan, this includes the State and Federal requirements for the Prevention of Significant Deterioration (PSD) at 326 IAC 2–2 and 40 CFR part 52.21, respectively. Under PSD, major new sources cannot be constructed unless the source owners/operators install the Best Available Control Technology (BACT), can demonstrate that the applicable air quality increments will be protected, and meet additional requirements to ensure that the area remains in attainment.

*Comment 8: The EPA has Misinterpreted the Ozone Standard in Concluding That an Ozone Design Value of 83 Parts Per Billion Is At or Below the Ozone Standard*

Several commenters have noted that the 2002–2004 ozone design value at the Yankeetown monitor (Alcoa monitor in Warrick County) was 83 ppb. The commenters argue that this ozone

design value is above the 80 ppb ozone standard, and, therefore, should be considered to be a violation of the ozone standard. They also assert that the 83 ppb ozone design value is closer to the 85 ppb ozone exceedance cutoff level than to the 80 ppb standard, and that EPA should err on the side of caution to protect public health and the environment and not redesignate the Evansville area to attainment of the ozone NAAQS with this monitored ozone design value. A commenter believes that the rounding protocol (rounding of monitored ozone concentrations to the digital accuracy reflected in the ozone standard itself) should not be allowed in the redesignation of nonattainment areas, and that following it indicates that EPA's decision is more based on politics than on science or common sense.

*Response 8*

In assessing an area's ozone air quality data in the review of an ozone redesignation request, EPA must determine whether the area has attained the 8-hour ozone NAAQS based on the definition of the NAAQS contained in 40 CFR 50.10, as interpreted in appendix I. The definition of the standard and its interpretation in appendix I establish specific criteria for the review of air quality data.

The definition of the ozone standard (primary and secondary [12]) in 40 CFR 50.10 specifies that the level of the standard is 0.08 ppm, daily maximum 8-hour average. Note that the ozone standard level is not specified in units of ppb. We sometimes refer to the standard in units of ppb only for purposes of readability, avoiding the use of fractional numbers; but this is not a precise reference to the standard. Therefore, the commenters err in asserting that the 8-hour ozone standard level is 80 ppb.

The definition of the ozone standard in 40 CFR part 50.10 states that ''the 8-hour primary and secondary ozone standards are met at an ambient air quality monitoring site when the average of the annual fourth-highest daily maximum 8-hour average ozone concentration is less than or equal to 0.08 ppm, as determined in accordance with appendix I to this part.'' Ozone data from air quality monitors are reported with decimal levels of three digits, although the 8-hour standard itself contains just two decimal digits. 40 CFR part 50, appendix I, parts 2.1, 2.1.2, and 2.2. Appendix I, part 2.1.1 requires that hourly average ozone concentrations shall be reported in parts per million to the third decimal place. EPA applies an established rounding convention, set forth in regulations, to determine whether a monitoring result expressed to the third decimal place complies with the two-decimal-place standard. Specifically, section 2.3 of 40 CFR part 50, appendix I, ''Comparisons with the Primary and Secondary Standards'' states:

> The primary and secondary ozone ambient air quality standards are met at an ambient air quality monitoring site when the 3-year average of the annual fourth-highest daily maximum 8-hour average ozone concentration is less than or equal to 0.08 ppm. The number of significant figures in the level of the standard dictates the rounding convention for comparing the computed 3-year average annual fourth-highest daily maximum 8-hour average ozone concentration with the level of the standard. The third decimal place of the computed value is rounded, with values equal to or greater than 5 rounding up. Thus a computed 3-year average ozone concentration of 0.085 ppm is the smallest value that is greater than 0.08 ppm.

The examples provided in appendix I also make it clear that the standard is met when the 3-year average of the annual fourth-highest daily maximum 8-hour average ozone concentration is less than or equal to 0.084 ppm (84 ppb). EPA has consistently used this rounding convention since promulgating the standard, and properly applied the convention here to assess compliance with the standard. Thus, an ozone design value of 83 ppb (0.083 ppm) is not a violation of the 8-hour ozone NAAQS. Moreover, the Evansville area ozone design value for the most recent three years, through the end of the 2005 ozone season, based on the average of the annual fourth-highest daily maximum 8-hour ozone concentrations over three years, is 0.077 ppm. Thus, the most recent ozone data show an ozone design value for the area substantially lower than 0.085 ppm, the level set as the smallest ozone concentration average that exceeds the 8-hour ozone standard.

Previously, under the 1-hour ozone standard, EPA followed a rounding convention similar to that in appendix I. EPA's application of the rounding convention under the 1-hour standard to determinations of attainment has been upheld by the Ninth Circuit Court of Appeals in *Our Children's Earth Foundation* v. *EPA*, No. 04–73032, Memorandum Opinion at 2 (June 28, 2005).

Based on the above, we conclude that we have not erred in determining that the Evansville area has attained the 8-hour ozone standard. EPA based its determination of attainment in this case squarely on the interpretation of the ozone NAAQS set forth in its regulations. We disagree with the commenters on this point.

*Comment 9: EPA Should Conduct a Public Hearing Before EPA Finalizes the Ozone Redesignation of the Evansville Area*

While several commenters acknowledge that public hearings have been held by the State regarding the requested ozone redesignation and the ozone maintenance plan, they assert that they did not realize until the summer of 2005 how serious the pollution problem is in southern Indiana. As a result, the commenters request that EPA conduct a public hearing prior to acting on the State's ozone redesignation request. One commenter asserted that the Evansville area is well above the national average in many major diseases, thus further justifying the need for a public hearing.

Several other commenters have registered complaints regarding EPA's denial of requests for a public hearing on the proposed redesignation of the Evansville area to attainment of the 8-hour ozone NAAQS. One of these commenters acknowledges that the State held a public hearing on the redesignation request in April 2005, but this commenter believes that the State was anything but objective in preparing the redesignation request and in conducting this public hearing, giving deference to large polluters in the area. A commenter also questioned the State of Indiana's objectivity on the basis of IDEM's testimony supporting a new power plant over the objections of local residents.

One commenter stated that EPA should address the issue of environmental justice, noting that the EPA had recently proposed a broader definition of environmental justice to encompass criteria beyond those related to race and minority populations.

*Response 9*

The EPA believes that interested parties were given ample opportunities to comment on Indiana's ozone redesignation request and associated SIP revision request. Section 553(c) of the Administrative Procedure Act (APA), which governs informal rulemaking actions, such as redesignation rulemakings, does not require EPA to provide for a hearing. Section 553(c) states that:

> ''The agency shall give interested persons an opportunity to participate in the rulemaking

[12] Primary standards are set to protect human health, and secondary standards are set to protect the environment. In the case of ozone, the primary and secondary standards are identical.

through submission of written data, views, or arguments with or without opportunity for oral presentation.''

EPA does not, as a matter of standard practice, conduct hearings on redesignation requests. EPA believes that the opportunity to provide written comments is sufficient, and stated in its response to requests for a hearing that it believed that to be the case with respect to Evansville. In denying the requests for a hearing, EPA explained that it had determined that the opportunity to submit written comments on its proposed rulemaking action constituted an adequate means of providing input from the public, and extended the public comment period. See 70 FR 58167 (October 5, 2005). Indeed several sets of written comments were received and EPA is addressing those comments in this final rule. There is no contention that the commenters lacked adequate time to prepare and submit written comments. EPA has provided an opportunity for interested parties to present data, views, and arguments through written comments. No showing was made that the opportunity to provide written comments precluded meaningful public participation.

The State has provided evidence that it notified the public of its intent to hold a public hearing on the redesignation request. The State held a public hearing and received feedback on its plans and draft submittals. EPA finds that the State met the public participation requirements of the Clean Air Act. Section 110(a). There was no change in circumstances that would have required the State to hold additional hearings, and commenters did not indicate that they requested additional hearings at the state level. The State submissions were adequate to support the redesignation request and the requested SIP revision. Claims that the State lacked objectivity are irrelevant to EPA's finding that the quality-assured monitoring data and other documentation submitted by the State are sufficient to support the request for redesignation of the area to attainment.

The incidence of cancer and other diseases noted by a commenter is not relevant to the issue of whether the area should be redesignated to attainment based on recent air quality in the Evansville area that meets the 8-hour ozone NAAQS, and the fulfillment of other statutory criteria for redesignation as described elsewhere in this notice.

With regard to the comment on environmental justice, based on its commitment to environmental justice, EPA seeks to ensure that its actions do not have disproportionately high and adverse environmental effects on communities, including minority and low-income communities. As explained elsewhere in this document (see the response to Comment 5), today's action is designed to prevent violations of the health-based national ambient air quality standard. It does not result in the relaxation of control measures on existing sources and therefore will not cause emissions increases from those sources. Overall, as discussed in response to Comment 5, emissions in the area are projected to decline following the redesignation. Thus, today's action will not have disproportionately high and adverse effects on any communities in the area, including minority or low-income communities.

*Comment 10: The State Has Not Adopted and Implemented Federally Enforceable Emission Controls as Required by the Clean Air Act as a Condition for Redesignation to Attainment*

A commenter notes that the Clean Air Act requires that areas seeking redesignation to attainment must undertake actions that are ''federally enforceable'' to improve air quality. The commenter claims that the State has not done so. The commenter argues that the State is, instead, relying entirely on the Federal $NO_X$ SIP call, which was promulgated in 2001—three years before EPA made the decision to make the Evansville area nonattainment for the ozone NAAQS. The commenter also claims that there has been no action by any level of government to reduce ozone forming conditions since the Evansville area was designated nonattainment.

Another commenter contends that, while there were some reductions in ozone precursor emissions in the immediate nonattainment area as a result of EPA's $NO_X$ SIP call, it is unclear, at this time, whether these emission reductions will have a positive or negative impact on the local air quality as the result of ''$NO_X$ scavenging'' of ozone. The commenter claims that this phenomenon appears to be the case in the summer of 2005, when the ozone monitor in Inglefield recorded low levels of ozone compared to the other monitors in the area.

Dr. Alexandrovich states that the ozone trends at monitors in the Evansville area, particularly in the most recent years, are explained by regional emission reductions achieved through the Federal Motor Vehicle Emissions Control Program, acid rain control program, and $NO_X$ SIP call supplemented by local emissions reductions in Vanderburgh and Warrick Counties. Further emissions reductions will be achieved through additional Federal emission reductions from vehicles, fuels, and electric utilities. This commenter goes on to state that ozone formation in the Evansville area is $NO_X$-limited and ozone reduction through $NO_X$ scavenging is not an issue. Ozone levels have declined as regional $NO_X$ emissions have decreased. The ozone decrease is most evident at the Inglefield monitor, AIRS 18–163–0013 (Vanderburgh County). The ozone decrease in this area is consistently greater than at other monitoring sites in the Evansville area, probably due to regional $NO_X$ emission reductions in an area that is $NO_X$-limited.

*Response 10*

Although the $NO_X$ SIP call was issued by the EPA in 2001, the State of Indiana can claim credit for the regional $NO_X$ emission reductions that have resulted from the implementation of the $NO_X$ emission control rules adopted by the State to comply with the $NO_X$ SIP call. The State of Indiana adopted $NO_X$ emission control regulations which were implemented beginning in the period of 2003–2004, and which will result in additional reductions in regional $NO_X$ emissions through 2007 or later. The State can take credit for these federally enforceable emission reductions when considering the emission reductions that led to the air quality improvement in the Evansville area. The State may also consider these emission reductions in its maintenance demonstration, to the extent that such emission reductions are permanent, enforceable, and will continue to occur after the attainment period (after 2002–2004).

The EPA and the Clean Air Act do not require the State to consider only emission reductions resulting from rules adopted after designation of areas as nonattainment of the NAAQS. The State may consider emission reductions resulting from ''existing'' regulations as long as the emission reductions themselves occur subsequent to the period of NAAQS violation upon which a nonattainment designation is based. Since the nonattainment designation for the Evansville area was based on ozone data for the period of 2001–2003, the State can consider the emission reductions that occurred subsequent to any year in this period. The State is correct in taking credit for the $NO_X$ emission reductions that resulted from the implementation of the State's emission control regulations under the $NO_X$ SIP call. In addition, EPA has implemented several programs that have resulted in reduced emissions in recent

years. For cars and light trucks, EPA has instituted the National Low Emissions Vehicle (NLEV) program, which went into effect nationally in 2001, and EPA's Tier 2 rules, which went into effect in 2004. In addition, Tier 2 standards for nonroad diesel engines were phased in between 2001 and 2004. Over time, the phase-in of these programs has resulted in reductions in emissions as new vehicles have replaced older, higher-polluting vehicles. Further emission reductions have occurred as a result of implementation of EPA standards for small spark-ignited engines (e.g., lawnmowers) and locomotives. The heavy duty highway truck engine rule also implemented emission reductions beginning in 2004. See also the discussion in our September 9, 2005 proposed rule, 70 FR 53610–53611 and the responses to Comments 1 and 4 above.

As noted in the State's June 2, 2005 submittal, significant $NO_X$ emission reductions have occurred in the southwestern Indiana area as a result of the implementation of State $NO_X$ emission control rules for electric generating units. The State $NO_X$ emission control rules were adopted and implemented to comply with EPA's acid rain control requirements and EPA's $NO_X$ SIP call. On December 6, 2005 and December 7, 2005, IDEM submitted to the EPA more detailed information to document the $NO_X$ emission reductions resulting from the implementation of these $NO_X$ emission control regulations. Based on ozone season-specific, facility-specific $NO_X$ emissions data, IDEM has determined that electric generating unit $NO_X$ emissions have steadily declined between 1998 and 2005. Table 4 documents the change in ozone season $NO_X$ emissions for these facilities.

TABLE 4.—OZONE SEASON $NO_X$ EMISSIONS FROM ELECTRIC GENERATING UNITS IN SOUTHWESTERN INDIANA[1] IN UNITS OF TONS PER OZONE SEASON.

| Year | $NO_X$ Emissions (tons per ozone season) |
|---|---|
| 1998 | 66707 |
| 1999 | 63242 |
| 2000 | 58852 |
| 2001 | 57922 |
| 2002 | 52719 |
| 2003 | 47784 |
| 2004 | 30427 |
| 2005 | 22294 |

[1] Southwestern Indiana includes Dubois, Gibson, Pike, Posey, Spencer, Vanderburgh, and Warrick Counties.

These data clearly show the reduction in regional $NO_X$ emissions that resulted between 2001–2003, the ozone nonattainment period, and 2002–2004, the attainment period. These data also show continued reduction of regional $NO_X$ emissions through 2005. Note that the $NO_X$ emissions from electric generating units in southwestern Indiana declined by 47.5 percent between 2001 (a year during the 2001–2003 nonattainment period) and 2004 (a year during the 2002–2004 attainment period). These emissions decreased an additional 26.7 percent between 2004 and 2005 as a result of the implementation of Indiana's $NO_X$ emission control regulations in compliance with EPA's $NO_X$ SIP call. These emission reductions have resulted from the implementation of permanent and enforceable emission reduction requirements, and have contributed to the attainment of the 8-hour ozone standard in the Evansville area and to maintenance of this standard in this area. Emission reductions from these sources will continue through 2007 and beyond, and will be supplemented by CAIR through 2015 and beyond.

Besides the Federal and State emission control programs mentioned above, permanent and enforceable emission reductions have been achieved through other means, such as enforcement of existing regulations. A prime example of such emission reductions resulted from an enforcement action against the Southern Gas and Electric Company, Incorporated (SIGECO). In June 2003, the United States and SIGECO entered into a consent decree in which, among other things, SIGECO agreed to implement certain $NO_X$ control measures at its F.B. Culley Station in Warrick County. *U.S.* v. *SIGECO*, No. IP99–1692 (S.D. Ind.). More specifically, by no later than September 1, 2003, the Company was required to continuously operate Selective Catalytic Reduction (SCR) emission controls at the Culley Station Unit 3 to reduce $NO_X$ emissions. In addition, by December 31, 2006, SIGECO is required to undertake additional, substantial $NO_X$ emission reduction measures at Culley Station Unit 1, which will help to maintain the 8-hour ozone standard in the Evansville area. These measures collectively should result in a total $NO_X$ emission reduction of 4,000 tons per year at this facility.

We agree with Dr. Alexandrovich, the Vanderburgh County Ozone Officer, that the Evansville area appears to be $NO_X$-limited. This explains why peak ozone concentrations in the area have decreased as state $NO_X$ rules controlling emissions from electric generating units (power plants) and other major combustion sources have been implemented. We also agree with this commenter that other federally enforceable emission controls on regional emissions from mobile sources and fuels, and through CAIR, will be implemented in the future and that these emission controls will further lower ozone concentrations in the Evansville area.

It should be noted that the EPA and other organizations and institutions conducted considerable ozone modeling analyses to support the $NO_X$ SIP call. These analyses supported the conclusion that the $NO_X$ SIP call, and the state regulations resulting from the $NO_X$ SIP call, would result in regional $NO_X$ emission reductions and significantly lower ozone levels east of the Mississippi River. We disagree with the commenter's claim that the benefits of the $NO_X$ SIP call are dubious. The commenter has presented no data or evidence to support this claim. We, along with the State, believe that the $NO_X$ SIP call was instrumental in the attainment of the ozone NAAQS in the Evansville area. The State's $NO_X$ emission control regulations helped to attain the ozone NAAQS in the Evansville area, and will help to maintain the ozone NAAQS in this area.

To demonstrate that regional VOC and $NO_X$ emission reductions have contributed to attainment of the 8-hour ozone standard in the Evansville area and will contribute to maintenance of the 8-hour ozone standard, IDEM used ozone modeling results from various studies to assess ozone impacts resulting from the implementation of regional emission controls. In the State's June 2, 2005 ozone redesignation request for the Evansville area, IDEM draws the following conclusions from the various ozone modeling analyses that have addressed the Midwest:

EPA modeling analysis for the Heavy Duty Engine rule. EPA conducted modeling for Tier II vehicle and low-sulfur fuels to support the final rulemaking for the Heavy Duty Engine (HDE) and Vehicle Standards and Highway Diesel Fuel Rule. This modeling, in part, addressed ozone levels in Indiana, including the Evansville area. A base year of 1996 was modeled, and the impacts of fuel changes and the $NO_X$ SIP call were addressed for high ozone episodes in 1995. The modeling supports the conclusion that fuel improvements and the $NO_X$ SIP call result in significant ozone improvements (lower projected peak ozone concentrations) in the

Evansville area. Using the modeling results to determine Relative Reduction Factors (RRFs) [13] and considering the 2001–2003 ozone design values for each monitor in the Evansville area, IDEM projected the 2007 ozone design values for the monitoring sites. The worst-case monitoring site (based on the 2001–2003 ozone design values), the Alcoa-Yankeetown monitoring site, was projected to have a 2007 ozone design value of 0.071 ppm, down from a 2001–2003 ozone design value of 0.085 ppm. All monitoring sites in the Evansville area were projected to experience significant decreases in peak ozone concentrations between 2001–2003 and 2007. The highest peak ozone concentration in 2007 was projected to be 0.073 ppm at the Evansville-Mill Road monitoring site, with a projected 2007 ozone design value of 0.073 ppm. All monitoring sites were projected to experience 12 to 17 percent decreases in peak 8-hour ozone concentrations between 2001–2003 and 2007. Therefore, the $NO_X$ SIP call and the fuel modifications considered in the ozone modeling were found to significantly improve the ozone levels in the Evansville area.

LADCO modeling analysis for the 8-hour ozone standard assessment. LADCO has performed ozone modeling to evaluate the effect of the $NO_X$ SIP call and Tier II/Low Sulfur Fuel Rule on 2007 ozone levels in the Lake Michigan area, which includes the Evansville area. Like the EPA modeling discussed above, this modeling indicates that the 2001–2003 ozone design values for the ozone monitoring sites in the Evansville area would be significantly reduced to below-standard levels in 2007 as the result of the implementation of the $NO_X$ SIP call and the Tier II/Low Sulfur Fuel Rule.

EPA and LADCO modeling analysis for CAIR. EPA conducted modeling in support of the CAIR rulemaking. IDEM used the EPA modeling results and 2000–2002 monitored ozone design values for Posey, Vanderburgh, and Warrick Counties to project 2010 ozone design values with and without the implementation of CAIR. The implementation of CAIR was projected to slightly decrease the 2010 ozone design values in these counties. Similar to EPA, LADCO modeled base period and future ozone levels to assess the impact of CAIR in the Lake Michigan area. IDEM used the LADCO ozone modeling results along with the 2001–2003 ozone design values for the ozone monitors in the Evansville area to derive RRFs and to project 2010 ozone design values. All projected 2010 ozone design values were significantly below the 8-hour ozone standard, with the worst-case 2010 ozone design value projected to be 0.075 ppm at the Alcoa-Yankeetown monitoring site. These modeling results show that CAIR will further reduce peak ozone levels in the Evansville area and that, with the implementation of the $NO_X$ SIP call (also factored into EPA's and LADCO's ozone modeling) and CAIR, the Evansville area will continue to maintain the 8-hour ozone standard.

The modeling analyses and demonstrations discussed above provide further support for our determination that the area will maintain the 8-hour ozone standard. See the response to Comment 5.

With regard to the negative comment regarding $NO_X$ scavenging, it is noted that $NO_X$ scavenging refers to a decrease in local ozone concentrations associated with significant local $NO_X$ emissions or with increases in local $NO_X$ emissions (some ozone is converted to oxygen and nitrogen dioxide due to reaction with $NO_X$). Similarly, there can be an increase in local ozone concentrations associated with a decrease in local $NO_X$ emissions. $NO_X$ scavenging is always a possibility near large $NO_X$ sources. This does not appear to be a factor in this case. Please note that any such $NO_X$ scavenging, if a factor, was likely to have been present in the area when the 8-hour ozone NAAQS was originally violated in 2001–2003, when the EPA designated the Evansville area as nonattainment for the 8-hour ozone NAAQS. In the period of 2001–2003, the pre-$NO_X$ SIP call emissions would have been relatively high and could have decreased local ozone concentrations to some degree; yet the area violated the ozone standard. Beginning in 2003–2004 and later, $NO_X$ emissions from power plants would have been lower due to implementation of $NO_X$ emission control regulations resulting from the $NO_X$ SIP call. If $NO_X$ scavenging were a factor, local ozone concentrations should have increased, yet the Evansville area attained the ozone standard. Thus, it is unlikely that $NO_X$ scavenging due to power plant emissions is an explanation for why the Evansville area ozone monitors are now recording attainment of the 8-hour ozone standard. (In addition, as pointed out by Dr. Alexandrovich, the area appears to be $NO_X$-limited; as such, future regional $NO_X$ emission reductions will further lower ozone concentrations in this area.) Finally, the commenter concerned about $NO_X$ scavenging has provided no data showing that such has occurred.

For all of the above reasons, and for the reasons stated in our September 9, 2005 proposed rule, we believe that the criterion set forth in section 107(d)(3)(E)(iii) of the Clean Air Act is satisfied, and that ''the improvement in air quality is due to permanent and enforceable reductions in emissions resulting from implementation of the applicable implementation plan and applicable Federal air pollutant control regulations and other permanent and enforceable reductions.'' EPA, thus, is not acting illegally in approving the State's ozone redesignation request for the Evansville area.

## VI. What Are Our Final Actions?

EPA is making a determination that Vanderburgh and Warrick Counties have attained the 8-hour ozone NAAQS, and EPA is approving the redesignation of Vanderburgh and Warrick Counties from nonattainment to attainment for the 8-hour ozone NAAQS. After evaluating Indiana's redesignation request, EPA has determined that it meets the redesignation criteria set forth in section 107(d)(3)(E) of the CAA. The final approval of this redesignation request changes the official designation for Vanderburgh and Warrick Counties from nonattainment to attainment for the 8-hour ozone standard.

EPA is also approving the maintenance plan SIP revision for Vanderburgh and Warrick Counties. Approval of the maintenance plan is based on Indiana's demonstration that the plan meets the requirements of section 175A of the CAA, as described more fully above. Additionally, EPA is finding adequate and approving the 2015 MVEBs submitted by Indiana in conjunction with the redesignation request.

We have reviewed comments on our September 9, 2005 proposed rule, and have found no comments that would cause us to reverse the actions we documented in the proposed rule. Therefore, all proposed actions are being finalized here.

## VII. Statutory and Executive Order Review

### *Executive Order 12866: Regulatory Planning and Review*

Under Executive Order 12866 (58 FR 51735, October 4, 1993), this action is not a ''significant regulatory action'' and

[13] Relative Reduction Factors are fractional changes in peak ozone concentrations projected to occur as a result of assumed changes in precursor emissions resulting from the implementation of emission control strategies. Relative Reduction Factors are derived through modeling of peak ozone concentrations before and after implementation emission controls and are applied to monitored ozone concentrations to project post-control peak ozone levels.

therefore is not subject to review by the Office of Management and Budget.

*Executive Order 13211: Actions Concerning Regulations That Significantly Affect Energy Supply, Distribution, or Use*

Because it is not a ''significant regulatory action'' under Executive Order 12866 or a ''significant energy action,'' this action is also not subject to Executive Order 13211, ''Actions Concerning Regulations That Significantly Affect Energy Supply, Distribution, or Use'' (66 FR 28355, May 22, 2001).

*Regulatory Flexibility Act*

This action merely approves state law as meeting federal requirements and imposes no additional requirements beyond those imposed by state law. Redesignation of an area to attainment under section 107(d)(3)(E) of the Clean Air Act does not impose any new requirements on small entities. Redesignation is an action that affects the status of a geographical area and does not impose any new regulatory requirements on sources. Accordingly, the Administrator certifies that this rule will not have a significant economic impact on a substantial number of small entities under the Regulatory Flexibility Act (5 U.S.C. 601 *et seq.*).

*Unfunded Mandates Reform Act*

Because this rule approves pre-existing requirements under state law and does not impose any additional enforceable duty beyond that required by state law, it does not contain any unfunded mandate or significantly or uniquely affect small governments, as described in the Unfunded Mandates Reform Act of 1995 (Pub. L. 104–4).

*Executive Order 13175: Consultation and Coordination With Indian Tribal Governments*

This rule also does not have tribal implications because it will not have a substantial direct effect on one or more Indian tribes, on the relationship between the Federal Government and Indian tribes, or on the distribution of power and responsibilities between the Federal Government and Indian tribes, as specified by Executive Order 13175 (65 FR 67249, November 9, 2000).

*Executive Order 13132: Federalism*

This action also does not have Federalism implications because it does not have substantial direct effects on the states, on the relationship between the national government and the states, or on the distribution of power and responsibilities among the various levels of government, as specified in Executive Order 13132 (64 FR 43255, August 10, 1999). Redesignation is an action that merely affects the status of a geographical area, and does not impose any new requirements on sources, or allows a state to avoid adopting or implementing additional requirements, and does not alter the relationship or distribution of power and responsibilities established in the Clean Air Act.

*Executive Order 13045: Protection of Children From Environmental Health and Safety Risks*

This rule also is not subject to Executive Order 13045 ''Protection of Children from Environmental Health Risks and Safety Risks'' (62 FR 19885, April 23, 1997), because it is not economically significant.

*National Technology Transfer Advancement Act*

In reviewing SIP submissions, EPA's role is to approve state choices, provided that they meet the criteria of the Clean Air Act. In this context, in the absence of a prior existing requirement for the state to use voluntary consensus standards (VCS), EPA has no authority to disapprove a SIP submission for failure to use VCS. It would thus be inconsistent with applicable law for EPA, when it reviews a SIP submission, to use VCS in place of a SIP submission that otherwise satisfies the provisions of the Clean Air Act. Redesignation is an action that affects the status of a geographical area but does not impose any new requirements on sources. Thus, the requirements of section 12(d) of the National Technology Transfer and Advancement Act of 1995 (15 U.S.C. 272 note) do not apply.

*Environmental Justice*

Executive Order 12898 establishes a Federal policy for incorporating environmental justice into Federal agency actions by directing agencies to identify and address, as appropriate, disproportionately high and adverse human health or environmental effects of their programs, policies, and activities on minority and low-income populations. As explained elsewhere in this document (see responses to Comments 5 and 9), today's action is designed to prevent violations of the health-based national ambient air quality standard. It does not result in the relaxation of control measures on existing sources and therefore will not cause emissions increases from those sources. Overall, as discussed in response to Comments 5 and 9, emissions in the area are projected to decline following the redesignation. Thus, today's action will not have disproportionately high and adverse effects on any communities in the area, including minority and low-income communities.

*Paperwork Reduction Act*

This rule does not impose an information collection burden under the provisions of the Paperwork Reduction Act of 1995 (44 U.S.C. 3501 *et seq.*).

*Congressional Review Act*

The Congressional Review Act, 5 U.S.C. 801 *et seq.*, as added by the Small Business Regulatory Enforcement Fairness Act of 1996, generally provides that before a rule may take effect, the agency promulgating the rule must submit a rule report, which includes a copy of the rule, to each House of the Congress and to the Comptroller General of the United States. EPA will submit a report containing this rule and other required information to the U.S. Senate, the U.S. House of Representatives, and the Comptroller General of the United States prior to publication of the rule in the **Federal Register**. A major rule cannot take effect until 60 days after it is published in the **Federal Register**. This action is not a ''major rule'' as defined by 5 U.S.C. 804(2).

Under section 307(b)(1) of the Clean Air Act, petitions for judicial review of this action must be filed in the United States Court of Appeals for the appropriate circuit by February 27, 2006. Filing a petition for reconsideration by the Administrator of this final rule does not affect the finality of this rule for the purposes of judicial review nor does it extend the time within which a petition for judicial review may be filed, and shall not postpone the effectiveness of such rule or action. This action may not be challenged later in proceedings to enforce its requirements. (See Section 307(b)(2).)

**List of Subjects**

*40 CFR Part 52*

Environmental protection, Air pollution control, Intergovernmental relations, Nitrogen dioxide, Ozone, Particulate matter, Volatile organic compounds.

*40 CFR Part 81*

Environmental protection, Air pollution control, National parks, Wilderness areas.

Dated: December 15, 2005.

**Bharat Mathur,**

*Acting Regional Administrator, Region 5.*

■ Parts 52 and 81, chapter I, title 40 of the Code of Federal Regulations is amended as follows:

## PART 52—[AMENDED]

■ 1. The authority citation for part 52 continues to read as follows:

**Authority:** 42 U.S.C. 7401 *et seq.*

### Subpart P—Indiana

■ 2. Section 52.777 is amended by adding paragraph (ee) to read as follows:

**§ 52.777 Control strategy: photochemical oxidants (hydrocarbons).**

* * * * *

(ee) Approval—On June 2, 2005, Indiana submitted a request to redesignate Vanderburgh and Warrick Counties to attainment of the 8-hour ozone National Ambient Air Quality Standard. This request was supplemented with a submittal dated October 20, 2005. As part of the redesignation request, the State submitted a maintenance plan as required by section 175A of the Clean Air Act. Elements of the section 175 maintenance plan include a contingency plan and an obligation to submit a subsequent maintenance plan revision in 8 years as required by the Clean Air Act. Also included were motor vehicle emission budgets for use to determine transportation conformity in Vanderburgh and Warrick Counties. The 2015 motor vehicle emission budgets are 4.20 tons per day for VOC and 5.40 tons per day for $NO_X$ for both counties combined.

## PART 81—[AMENDED]

■ 1. The authority citation for part 81 continues to read as follows:

**Authority:** 42 U.S.C. 7401 *et seq.*

■ 2. Section 81.315 is amended by revising the entry for Evansville, IN: Vanderburgh and Warrick Counties in the table entitled ''Indiana Ozone (8-Hour Standard)'' to read as follows:

**§ 81.315 Indiana.**

* * * * *

INDIANA OZONE (8-HOUR STANDARD)

| Designated area | Designation [a] | | Classification | |
|---|---|---|---|---|
| | Date [1] | Type | Date [1] | Type |
| * * * | * | * | * | * |
| Evansville, IN: | | | | |
| Vanderburgh County | 1/30/06 | Attainment. | | |
| Warrick County | 1/30/06 | Attainment. | | |
| * * * | * | * | * | * |

[a] Includes Indian Country located in each county or area, except as otherwise specified.
[1] This date is June 15, 2004, unless otherwise noted.

[FR Doc. 05–24542 Filed 12–28–05; 8:45 am]
BILLING CODE 6560–50–P

## ENVIRONMENTAL PROTECTION AGENCY

### 40 CFR Part 82

**[FRL–8017–2]**

**RIN 2060–AK45**

### Protection of Stratospheric Ozone: Adjusting Allowances for Class I Substances for Export to Article 5 Countries

**AGENCY:** Environmental Protection Agency (EPA).

**ACTION:** Final rule.

**SUMMARY:** This action finalizes adjustments to allocations of Article 5 allowances that permit production of Class I ozone-depleting substances (ODSs) solely for export to developing countries to meet those countries' basic domestic needs. This action adjusts the baseline Article 5 allowances for companies for specific Class I controlled substances and establishes a schedule for reductions in the Article 5 allowances for these Class I controlled substances in accordance with the Montreal Protocol on Substances that Deplete the Ozone Layer (Montreal Protocol) and the Clean Air Act (CAA). This action also extends the allocation of Article 5 allowances for the manufacture of methyl bromide solely for export to developing countries beyond January 1, 2005, in accordance with the Montreal Protocol and the CAA.

**EFFECTIVE DATE:** This final rule is effective on December 29, 2005.

**ADDRESSES:** EPA has established a docket for this action under Docket ID No. OAR–2004–0506. All documents in the docket are listed on the *www.regulations.gov* Web site. Although listed in the index, some information is not publicly available, i.e., CBI or other information whose disclosure is restricted by statute. Certain other material, such as copyrighted material, is not placed on the Internet and will be publicly available, only in hard copy form. Publicly available docket materials are available either electronically through *www.regulations.gov* or in hard copy at the Air Docket, EPA/DC, EPA West, Room B102, 1301 Constitution Ave., NW., Washington, DC. This Docket Facility is open from 8:30 a.m. to 4:30 p.m., Monday through Friday, excluding legal holidays. The Public Reading Room is open from 8:30 a.m. to 4:30 p.m., Monday through Friday, excluding legal holidays. The telephone number for the Public Reading Room is (202) 566–1744, and the telephone number for the Air Docket is (202) 566–1742.

**FOR FURTHER INFORMATION CONTACT:** Hodayah Finman, U.S. Environmental Protection Agency, Office of Air and Radiation, Stratospheric Protection Division (6205J), 1200 Pennsylvania Avenue, NW., Washington, DC, 20460; telephone number: (202) 343–9246; fax number: (202) 343–2338; *finman.hodayah@epa.gov*. You may also visit the EPA's Ozone Depletion Web site at *www.epa.gov/ozone* for further information about EPA's Stratospheric Ozone Protection regulations, the science of ozone layer depletion, and other related topics.

**SUPPLEMENTARY INFORMATION:** This action establishes a new Article 5 allowance baseline for specified Class I

substances, establishes a schedule for phased reductions in such production, and extends the time allowed for Article 5 production for methyl bromide. Article 5 allowances are solely for production to meet the basic domestic needs of developing countries referred to in the Protocol as ''Article V'' parties.

Section 533(d) of the Administrative Procedure Act (APA), 5 U.S.C., Chapter 5, generally provides that rules may not take effect earlier than 30 days after they are published in the **Federal Register**. This final rule is issued under section 307(d) of the CAA, which states: ''The provisions of section 553 through 557 * * * of Title 5 shall not, except as expressly provided in this subsection, apply to actions to which this subsection applies.'' CAA section 307(d)(1). Thus, section 553(d) of the APA does not apply to this rule. EPA nevertheless is acting consistently with the policies underlying APA section 553(d) in making this rule effective on December 29, 2005. APA section 553(d) provides an exception for any action that grants or recognizes an exemption or relieves a restriction. This final rule extends the grant of an exemption from the phaseout of methyl bromide to producers of this Class I ozone depleting substance (ODS) for the manufacture of methyl bromide to meet the basic domestic needs of developing countries. In addition, EPA finds that there is good cause to make the new Article 5 allowances baselines and phased reduction schedules effective without 30 days' prior notice. These new baselines and phased reduction schedules will make EPA regulations consistent with the adjustments to the Montreal Protocol agreed to at the Meeting of the Parties in Beijing in 1999. Those adjustments are already in effect. In addition, the new baselines and allowance allocations conform to current industry levels of production for export. Therefore, producers do not require advance notice to comply with today's regulatory amendment.

**Table of Contents**

I. What Is the Legislative and Regulatory Background of the Phaseout Regulations for Ozone-Depleting Substances?
II. How Did the Beijing Adjustments to the Montreal Protocol Change the Levels and Schedules of ODS Production To Meet the Basic Domestic Needs of Developing Countries?
III. Today's Action
IV. Statutory and Executive Order Reviews
A. Executive Order No. 12866: Regulatory Planning and Review
B. Paperwork Reduction Act
C. Regulatory Flexibility Act
D. Unfunded Mandates Reform Act
E. Executive Order No. 13132: Federalism
F. Executive Order No. 13175: Consultation and Coordination With Indian Tribal Governments
G. Executive Order No. 13045: Protection of Children From Environmental Health and Safety Risks
H. Executive Order No. 13211: Actions That Significantly Affect Energy Supply, Distribution, or Use
I. National Technology Transfer Advancement Act
J. Congressional Review Act

## I. What Is the Legislative and Regulatory Background of the Phaseout Regulations for Ozone-Depleting Substances?

The current regulatory requirements of the Stratospheric Ozone Protection Program that limit production and consumption of ozone-depleting substances can be found at 40 CFR part 82, subpart A. The regulatory program was originally published in the **Federal Register** on August 12, 1988 (53 FR 30566), in response to the 1987 signing and subsequent ratification of the Montreal Protocol on Substances that Deplete the Ozone Layer (Protocol). The U.S. was one of the original signatories to the 1987 Montreal Protocol and the U.S. ratified the Protocol on April 21, 1988. Congress then enacted, and President Bush signed into law, the Clean Air Act Amendments of 1990 (CAAA of 1990), which included Title VI on Stratospheric Ozone Protection, codified as 42 U.S.C. Chapter 85, Subchapter VI, to ensure that the United States could satisfy its obligations under the Protocol. EPA issued regulations to implement this legislation and has made several amendments to the regulations since.

The requirements contained in the final rules published in the **Federal Register** on December 20, 1994 (59 FR 65478) and May 10, 1995 (60 FR 24970) establish an Allowance Program. The Allowance Program and its history are described in the notice of proposed rulemaking published in the **Federal Register** on November 10, 1994 (59 FR 56276). The control and the phaseout of the production and consumption of Class I ODSs as required under the Protocol and the CAA are accomplished through the Allowance Program.

In developing the Allowance Program, we collected information on the amounts of ODSs produced, imported, exported, transformed and destroyed within the U.S. for specific baseline years for specific chemicals. This information was used to establish the U.S. production and consumption ceilings for these chemicals. The data were also used to assign company-specific production and import rights to companies that were in most cases producing or importing during the specific year of data collection. These production or import rights are called ''allowances.'' During the complete phaseout of many ODSs, the quantities of allowances granted to companies for those chemicals were gradually reduced and eventually eliminated. Production allowances and consumption allowances no longer exist for any Class I ODSs. All production and consumption of Class I controlled substances is prohibited under the Protocol and the CAA, except for a few narrow exemptions.

In the context of the regulatory program, the use of the term ''consumption'' may be misleading. Consumption does not mean the ''use'' of a controlled substance, but rather is defined as the formula: production + imports − exports, of controlled substances (Article 1 of the Protocol and Section 601 of the CAA). Class I controlled substances that were produced or imported through the expenditure of allowances prior to their phaseout date may continue to be used by industry and the public after that specific chemical's phaseout except where the regulations include explicit use restrictions. Use of such substances may be subject to other regulatory limitations.

The specific names and chemical formulas for the Class I ODSs are in Appendix A and Appendix F in Subpart A of 40 CFR part 82. The specific names and chemical formulas for the Class II ODSs are in Appendix B and Appendix F in Subpart A.

Although the regulations phased out the production and consumption of Class I controlled substances, a very limited number of exemptions exist, consistent with U.S. obligations under the Protocol. The regulations allow for the production of phased-out Class I controlled substances provided the substances are either transformed or destroyed. They also allow limited production if the substances are (1) exported to countries operating under Article 5 of the Protocol or (2) produced for essential or critical uses as authorized by the Protocol and the regulations. Limited exceptions to the ban on the import of phased-out Class I controlled substances exist if the substances are: (1) Previously used, (2) imported for essential or critical uses as authorized by the Protocol and the regulations, (3) imported for destruction or transformation only, or (4) a transhipment or a heel (a small amount of controlled substance remaining in a container after discharge) (40 CFR 82.4).

**II. How Did the Beijing Adjustments to the Montreal Protocol Change the Levels and Schedules of ODS Production To Meet the Basic Domestic Needs of Developing Countries?**

Under the Montreal Protocol, industrialized countries and developing countries have different schedules for phasing out the production and import of ODSs. Developing countries operating under Article 5, paragraph 1 of the Protocol in most cases have additional time in which to phase out ODSs. The Parties to the Protocol recognized that it would be inadvisable for developing countries to spend their scarce resources to build new ODS manufacturing facilities to meet their basic domestic needs as industrialized countries phase out. The Parties therefore decided to permit a small amount of production in industrialized countries, above and beyond the amounts permitted under those countries' phaseout schedules, to meet the basic domestic needs of developing countries.

The original Montreal Protocol schedule for industrialized country production of ODSs to meet the basic domestic needs of developing countries was based on a percentage of each producing country's baseline. The initial level was set at 10 percent of the baseline and this level changed to 15 percent upon phaseout of each specific ODS or group of chemicals. EPA regulations prior to today's action reflect this approach.

The adjustments to the Montreal Protocol adopted by the Parties at their 11th meeting in Beijing change the basis for calculating production by industrialized countries to meet the basic domestic needs of developing countries for specific ODSs or groups of ODSs. Instead of being calculated as a percentage of total production of the ODS in a given year, the new baselines for basic domestic need production are calculated based on the average quantity of the ODS exported to Article 5 countries over a specified range of years. The new baseline calculation agreed to in Beijing reflects the Parties' concern, which EPA shares, that global oversupply of certain Class I ODSs is interfering with the transition to alternatives. The oversupply of these ODSs results in low prices that make it difficult for non-ozone-depleting alternatives to compete in the marketplace. Businesses and individuals thus lack an economic incentive to transition to alternatives. The new baseline calculation is designed to overcome this problem with respect to Article 5 countries by reducing supply to those countries. The price of these ODSs should rise to reflect the decrease in supply.

The adjustments agreed to in Beijing also establish reduction schedules for the manufacture of ODSs by industrialized countries to meet the basic domestic needs of developing countries. Article 5 countries are subject to periodic step-downs in the amount of ODSs they may consume. If industrialized countries' production for export to Article 5 countries were not adjusted to take into account these step-downs, the problem of oversupply likely would recur. Therefore, the Parties agreed at Beijing to reduction schedules that would mirror each step-down in Article 5 consumption. The schedules also reflect the complete consumption phaseouts in Article 5 countries. Under these schedules, industrialized countries must cease production for export to developing countries of CFCs by January 1, 2010, and of methyl bromide by January 1, 2015.

To ensure consistency with the Montreal Protocol, EPA proposed to adopt new baselines and reduction schedules at 40 CFR part 82, subpart A (70 FR 55480). Under that proposed rule, the amount of ODSs that could be produced to meet the basic domestic needs of developing countries would be reduced by a certain percentage of the baseline in accordance with the step-down schedule for Article 5 developing countries for those chemicals until they are completely phased out. In today's action, EPA is finalizing the proposed provisions described in this paragraph.

**III. Today's Action**

EPA published a proposed rule on September 21, 2005 in the **Federal Register** (70 FR 55480) to amend regulations found at 40 CFR part 82 by establishing new baselines for companies that manufacture Class I ODS to meet the basic domestic needs of so-called ''Article 5'' developing countries, issuing Article 5 allowances in accordance with the revised baselines, and creating a phasedown schedule for these allowances to reflect the phasedown schedules of developing countries as specified in the Montreal Protocol and the Adjustment adopted at the 11th Meeting of the Parties in Beijing.

Specifically, EPA proposed new baselines for the CFCs subject to the earliest controls on production and import, other halogenated CFCs, and methyl bromide to reflect changes to the Montreal Protocol. As a result of the Beijing Adjustments to the Protocol, Article 2A, paragraphs 4–7 state that an industrialized Party's allowable production of CFCs 11, 12, 113, 114, and 115, referred to under the Clean Air Act as Class I, Group I substances, to meet the basic domestic needs of Article 5 Parties shall be measured against ''the annual average of its production of [these substances] for basic domestic needs for the period 1995 to 1997 inclusive.''

In regard to other halogenated CFCs, referred to in the Clean Air Act as Class I, Group III ODS, the Beijing Adjustments state that the new baseline for Article 5 production should be ''the annual average of its production of [these substances] for basic domestic needs for the period 1998–2000 inclusive.''

EPA proposed using more recent export data from the years 2000–2003 to establish the baselines for these two groups of chemicals. The Agency believes that the use of more recent export data represents a truer picture of the actual basic domestic needs for these chemicals in developing countries and addresses the concerns regarding oversupply of CFCs as discussed in section I of this preamble.

EPA would like to note that for Class I, Group III substances the new baseline years provide the U.S. with a baseline that is nearly zero. Since the baseline for Class I, Group III substances is negligible, EPA proposed a baseline of zero for these substances.

In addition to proposing new baselines, EPA also proposed phasedown schedules for Article 5 allowances consistent with the schedule set forth in the Beijing adjustments to the Montreal Protocol. While the baseline proposed by EPA was different, and more stringent, than the baselines agreed to in the Beijing adjustment for CFCs, the phasedown schedule proposed by the Agency followed the Beijing adjustment exactly. Hence, the proposed Article 5 allowance reduction schedule for production of the Class I, Group I controlled substances was as follows: 50% of the Article 5 allowance baseline for the 2006 control period; 15% of baseline for each of the control periods from January 1, 2007, to December 31, 2009; and 0% (complete phaseout) for the control periods beginning January 1, 2010, and thereafter.

The proposed Article 5 allowance reduction schedule for production of the Class I, Group III controlled substances was 80% of baseline for the 2006 control period; 15% of baseline for each of the control periods from January 1, 2007 to December 31, 2009; and 0% (complete phaseout) for the control periods beginning January 1, 2010 and thereafter. However, under EPA's preferred option of a zero baseline based

on 2000–2003 data, this reduction schedule would be unnecessary.

In regard to methyl bromide production for the basic domestic needs of developing countries, EPA proposed establishing the same baseline and the same phasedown schedule as that agreed to under the Beijing adjustments. The Beijing adjustments state that a country's baseline for Article 5 production of methyl bromide is ''the annual average of its production of [methyl bromide] for basic domestic needs for the period 1995 to 1998 inclusive.'' The reduction schedule for the production of methyl bromide (Class I, Group VI controlled substances) proposed by EPA is 80% of the Article 5 allowance baseline for each of the control periods from January 1, 2006 to December 31, 2014; 0% (complete phaseout) starting January 1, 2015 and thereafter.

As noted in the proposal, Article 5 production for Class I Group IV and Group V chemicals was not altered under the Beijing Amendments and EPA did not propose to take any action to change the baselines or reduction schedules for these substances.

EPA did not receive any comments on the proposed revisions to the baselines or reduction schedules for Article 5 allowances. Nor did EPA receive any comments on extending the availability of Article V allowances for methyl bromide. Therefore, with today's action, EPA is finalizing the amendments to the Agency's regulations as proposed. The revised baseline and the percentage of baseline allocated in each control period beginning with 2006 are located in section 82.11 of the regulations.

## IV. Statutory and Executive Order Reviews

### *A. Executive Order 12866: Regulatory Planning and Review*

Under Executive Order 12866 (58 FR 51735, October 4, 1993), the Agency must determine whether this regulatory action is ''significant'' and therefore subject to OMB review and the requirements of the Executive Order. The Order defines a ''significant'' regulatory action as one that is likely to result in a rule that may: (1) Have an annual effect on the economy of $100 million or more, or adversely affect in a material way the economy, a sector of the economy, productivity, competition, jobs, the environment, public health or safety, or State, local, or tribal governments or communities; (2) create a serious inconsistency or otherwise interfere with an action taken or planned by another agency; (3) materially alter the budgetary impact of entitlements, grants, user fees, or loan programs or the rights and obligations of recipients thereof; or (4) raise novel legal or policy issues arising out of legal mandates, the President's priorities, or the principles set forth in the Executive Order. It has been determined by OMB and EPA that this final action is not a ''significant regulatory action'' under the terms of Executive Order 12866, and is therefore not subject to OMB review under the Executive Order.

### *B. Paperwork Reduction Act*

This final action does not add any information collection requirements or increase burden under the provisions of the Paperwork Reduction Act, 44 U.S.C. 3501 *et seq.* The OMB has previously approved the information collection requirements contained in the existing regulations, 40 CFR part 82, under the provisions of the Paperwork Reduction Act, 44 U.S.C. 3501 *et seq.* and has assigned OMB control number 2060–0170, EPA ICR number 1432. A copy of the OMB-approved Information Collection Request (ICR) may be obtained from Susan Auby, Collection Strategies Division; U.S. Environmental Protection Agency (2822T); 1200 Pennsylvania Ave., NW., Washington, DC 20460 or by calling (202) 566–1672.

Burden means the total time, effort, or financial resources expended by persons to generate, maintain, retain, or disclose or provide information to or for a Federal agency. This includes the time needed to review instructions; develop, acquire, install, and utilize technology and systems for the purposes of collecting, validating, and verifying information, processing and maintaining information, and disclosing and providing information; adjust the existing ways to comply with any previously applicable instructions and requirements; train personnel to be able to respond to a collection of information; search data sources; complete and review the collection of information; and transmit or otherwise disclose the information.

An Agency may not conduct or sponsor, and a person is not required to respond to, a collection of information unless it displays a currently valid OMB control number. The OMB control numbers for EPA's regulations are listed in 40 CFR Part 9 and 48 CFR Chapter 15.

### *C. Regulatory Flexibility Act*

EPA has determined that it is not necessary to prepare a regulatory flexibility analysis in connection with this final rule. For purposes of assessing the impacts of today's rule on small entities, small entity is defined as: (1) A small business that is identified by the North American Industry Classification System (NAICS) Code in the Table below; (2) a small governmental jurisdiction that is a government of a city, county, town, school district or special district with a population of less than 50,000; and (3) a small organization that is any not-for-profit enterprise which is independently owned and operated and is not dominant in its field.

| Category | NAICS Code | SIC Code | SIC small business size standard (in number of employees) |
|---|---|---|---|
| 1. Chemical and Allied Products, NEC | 424690 | 5169 | 100 |

After considering the economic impacts of today's rule on small entities, EPA has concluded that this action will not have a significant economic impact on a substantial number of small entities. This final rule will not impose any requirements on small entities, as it regulates large corporations that produce Class I ODSs. There are no small entities in this regulated industry.

### *D. Unfunded Mandates Reform Act*

Title II of the Unfunded Mandates Reform Act of 1995 (UMRA), Public Law 104–4, establishes requirements for Federal agencies to assess the effects of their regulatory actions on State, local, and tribal governments and the private sector. Under section 202 of the UMRA, EPA generally must prepare a written statement, including a cost-benefit analysis, for proposed and final rules with ''Federal mandates'' that may result in expenditures to State, local, and tribal governments, in the aggregate, or to the private sector, of $100 million

or more in any one year. Before EPA may promulgate a rule for which a written statement is needed, section 205 of the UMRA generally requires EPA to identify and consider a reasonable number of regulatory alternatives and adopt the least costly, most cost-effective, or least burdensome alternative that achieves the objectives of the rule. The provisions of section 205 do not apply when they are inconsistent with applicable law. Moreover, section 205 allows EPA to adopt an alternative other than the least costly, most cost-effective, or least burdensome alternative if the Administrator publishes with the final rule an explanation why that alternative was not adopted. Before EPA establishes any regulatory requirements that may significantly or uniquely affect small governments, including tribal governments, it must have developed under section 203 of the UMRA a small government agency plan. The plan must provide for notifying potentially affected small governments, enabling officials of affected small governments to have meaningful and timely input in the development of EPA regulatory proposals with significant Federal intergovernmental mandates, and informing, educating, and advising small governments on compliance with the regulatory requirements.

EPA has determined that this rule does not contain a Federal mandate that may result in expenditures of $100 million or more for State, local, and tribal governments, in the aggregate, or the private sector in any one year. Thus, today's rule is not subject to the requirements of sections 202 and 205 of the UMRA. Further, EPA has determined that this rule contains no regulatory requirements that might significantly or uniquely affect small governments because it does not impose any requirements on any State, local, or tribal government.

*E. Executive Order No. 13132: Federalism*

Executive Order 13132, entitled ''Federalism'' (64 FR 43255, August 10, 1999), requires EPA to develop an accountable process to ensure ''meaningful and timely input by State and local officials in the development of regulatory policies that have federalism implications.'' ''Policies that have federalism implications'' is defined in the Executive Order to include regulations that have ''substantial direct effects on the States, on the relationship between the national government and the States, or on the distribution of power and responsibilities among the various levels of government.''

This final rule does not have federalism implications. It will not have substantial direct effects on the States, on the relationship between the national government and the States, or on the distribution of power and responsibilities among the various levels of government, as specified in Executive Order 13132. Today's rule is expected to primarily affect producers and exporters of CFCs and methyl bromide. Thus, Executive Order 13132 does not apply to this rule.

*F. Executive Order No. 13175: Consultation and Coordination With Indian Tribal Governments*

Executive Order No. 13175, entitled ''Consultation and Coordination with Indian Tribal Governments'' (65 FR 67249, November 9, 2000), requires EPA to develop an accountable process to ensure ''meaningful and timely input by tribal officials in the development of regulatory policies that have tribal implications.'' This final rule does not have tribal implications, as specified in Executive Order No. 13175. Today's final rule does not significantly or uniquely affect the communities of Indian tribal governments. The final rule does not impose any enforceable duties on communities of Indian tribal governments. Thus, Executive Order No. 13175 does not apply to this final rule.

*G. Executive Order No. 13045: Protection of Children From Environmental Health and Safety Risks*

Executive Order 13045: ''Protection of Children from Environmental Health Risks and Safety Risks'' (62 FR 19885, April 23, 1997) applies to any rule that: (1) Is determined to be ''economically significant'' under E.O. 12866, and (2) concerns an environmental health or safety risk that EPA has reason to believe may have a disproportionate effect on children. If the regulatory action meets both criteria, the Agency must evaluate the environmental health or safety effects of the planned rule on children, and explain why the planned regulation is preferable to other potentially effective and reasonably feasible alternatives considered by the Agency.

While this final rule is not subject to the Executive Order because it is not economically significant as defined in E.O. 12866, we nonetheless have reason to believe that the environmental health or safety risk addressed by this action may have a disproportionate effect on children. Depletion of stratospheric ozone results in greater transmission of the sun's ultraviolet (UV) radiation to the earth's surface. The following studies describe the effects on children of excessive exposure to UV radiation: (1) Westerdahl J, Olsson H, Ingvar C. ''At what age do sunburn episodes play a crucial role for the development of malignant melanoma,'' Eur J Cancer 1994; 30A: 1647–54; (2) Elwood JM, Jopson J. ''Melanoma and sun exposure: an overview of published studies,'' Int J Cancer 1997; 73:198–203; (3) Armstrong BK. ''Melanoma: childhood or lifelong sun exposure,'' In: Grobb JJ, Stern RS, Mackie RM, Weinstock WA, eds. ''Epidemiology, causes and prevention of skin diseases,'' 1st ed. London, England: Blackwell Science, 1997: 63–6; (4) Whiteman D., Green A. ''Melanoma and Sunburn,'' Cancer Causes Control, 1994: 5:564–72; (5) Kricker A, Armstrong, BK, English, DR, Heenan, PJ. ''Does intermittent sun exposure cause basal cell carcinoma? A case control study in Western Australia,'' Int J Cancer 1995; 60: 489–94; (6) Gallagher, RP, Hill, GB, Bajdik, CD, et. al. ''Sunlight exposure, pigmentary factors, and risk of nonmelanocytic skin cancer I, Basal cell carcinoma,'' Arch Dermatol 1995; 131: 157–63; (7) Armstrong, BK. ''How sun exposure causes skin cancer: an epidemiological perspective,'' Prevention of Skin Cancer. 2004. 89–116.

The methyl bromide phaseout date for Article 5 countries is 2015 and allowing continuing U.S. production to meet such countries' basic domestic needs avoids the need for those countries to install new ODS manufacturing facilities. The effect of extending the availability of Article 5 allowances for methyl bromide should be that methyl bromide that would otherwise be produced at new facilities in developing countries will instead be produced in the U.S. for export to those countries. The amount of methyl bromide that will be released to the atmosphere should remain the same regardless of the manufacturing location. In addition, avoiding the installation of new capacity is one means of ensuring that production levels continue to decline. Thus, this rule is not expected to increase the impacts on children's health from stratospheric ozone depletion.

*H. Executive Order No. 13211: Actions That Significantly Affect Energy Supply, Distribution, or Use*

This final rule is not a ''significant energy action'' as defined in Executive Order No. 13211, ''Actions Concerning Regulations That Significantly Affect Energy Supply, Distribution, or Use'' (66 FR 28355 (May 22, 2001)) because it is not a significant regulatory action under Executive Order 12866.

*I. National Technology Transfer Advancement Act*

As noted in the proposed rule, section 12(d) of the National Technology Transfer and Advancement Act of 1995 (''NTTAA''), Public Law 104–113, section 12(d) (15 U.S.C. 272 note) directs EPA to use voluntary consensus standards in its regulatory activities unless to do so would be inconsistent with applicable law or otherwise impractical. Voluntary consensus standards are technical standards (e.g., materials specifications, test methods, sampling procedures, and business practices) that are developed or adopted by voluntary consensus standards bodies. The NTTAA directs EPA to provide Congress, through OMB, explanations when the Agency decides not to use available and applicable voluntary consensus standards. This action does not involve technical standards. Therefore, EPA did not consider the use of any voluntary consensus standards.

*J. Congressional Review Act*

The Congressional Review Act, 5 U.S.C. 801 *et seq.*, as added by the Small Business Regulatory Enforcement Fairness Act of 1996, generally provides that before a rule may take effect, the agency promulgating the rule must submit a rule report, which includes a copy of the rule, to each House of the Congress and to the Comptroller General of the United States. EPA will submit a report containing this rule and other required information to the U.S. Senate, the U.S. House of Representatives, and the Comptroller General of the United States prior to publication of the rule in the **Federal Register**. A Major rule cannot take effect until 60 days after it is published in the **Federal Register**. This action is not a ''major rule'' as defined by 5 U.S.C. 804(2). This rule will be effective on December 29, 2005.

**List of Subjects in 40 CFR Part 82**

Environmental protection, Administrative practice and procedures, Air pollution control, Chemicals, Exports, Imports, Ozone, Production, Reporting and recordkeeping requirements, Treaties.

Dated: December 22, 2005.

**Stephen L. Johnson,**

*Administrator.*

■ 40 CFR Part 82 is amended as follows:

## PART 82—PROTECTION OF STRATOSPHERIC OZONE

■ 1. The authority citation for part 82 continues to read as follows:

**Authority:** 42 U.S.C. 7414, 7601, 7671–7671q.

■ 2. Section 82.3 is amended by revising the entry for ''Article 5 allowance'' to read as follows:

**§ 82.3 Definitions for class I and class controlled substances.**

* * * * *

*Article 5 allowances* means the allowances apportioned under § 82.9(a), § 82.11(a)(2), and § 82.18(a).

* * * * *

■ 3. Section 82.4 is amended by revising paragraphs (b)(1) and (h) to read as follows:

**§ 82.4 Prohibitions for class I controlled substances.**

* * * * *

(b)(1) Effective January 1, 1996, for any Class I, Group I, Group II, Group III, Group IV, Group V or Group VII controlled substances, and effective January 1, 2005 for any Class I, Group VI controlled substances, and effective August 18, 2003, for any Class I, Group VIII controlled substance, no person may produce, at any time in any control period (except that are transformed or destroyed domestically or by a person of another Party) in excess of the amount of conferred unexpended essential use allowances or exemptions, or in excess of the amount of unexpended critical use allowances, or in excess of the amount of unexpended Article 5 allowances as allocated under § 82.9 and § 82.11, as may be modified under § 82.12 (transfer of allowances) for that substance held by that person under the authority of this subpart at that time for that control period. Every kilogram of excess production constitutes a separate violation of this subpart.

* * * * *

(h) No person may sell in the U.S. any Class I controlled substance produced explicitly for export to an Article 5 country.

* * * * *

■ 4. Section 82.9 is amended by revising paragraph (a)(4) to read as follows:

**§ 82.9 Availability of production allowances in addition to baseline production allowances for Class I controlled substances.**

(a) * * *

(4) 15 percent of their baseline production allowances for Class I, Group IV and Group V controlled substances listed under § 82.5 of this subpart for each control period beginning January 1, 1996 until January 1, 2010;

* * * * *

■ 5. Section 82.11 is amended by revising paragraph (a) introductory text and adding a new paragraph (a)(2) and (a)(3) to read as follows:

**§ 82.11 Exports of Class I controlled substances to Article 5 Parties.**

(a) If apportioned Article 5 allowances under § 82.9(a) or § 82.11(a)(2), a person may produce Class I controlled substances, in accordance with the prohibitions in § 82.4 and the reduction schedule in § 82.11(a)(3), to be exported (not including exports resulting in transformation or destruction, or exports of used controlled substances) to foreign states listed in appendix E to this subpart (Article 5 countries).

* * * * *

(2) Persons who reported exports of Class I, Group I controlled substances to Article 5 countries in 2000–2003 are apportioned baseline Article 5 allowances as set forth in § 82.11(a)(2)(i). Persons who reported exports of Class I, Group VI controlled substances to Article 5 countries in 1995–1998 are apportioned baseline Article 5 allowances as set forth in § 82.11(a)(2)(ii)).

(i) For Group I Controlled Substances

| Controlled Substance | Person | Allowances (kg) |
|---|---|---|
| CFC–11 | Honeywell | 7,150 |
| | Sigma Aldrich | 1 |
| CFC–113 | Fisher Scientific. | 5 |
| | Honeywell | 313,686 |
| | Sigma Aldrich | 48 |
| CFC–114 | Honeywell | 24,798 |
| | Sigma Aldrich | 1 |

(ii) For Group VI Controlled Substances

| Controlled Substance | Person | Allowances (kg) |
|---|---|---|
| Methyl Bromide. | Albemarle | 1,152,714 |
| | Ameribrom | 176,903 |
| | Great Lakes Chemical Corporation. | 3,825,846 |

(3) Phased Reduction Schedule for Article 5 Allowances allocated in § 82.11. For each control period specified in the following table, each person is granted the specified percentage of the baseline Article 5 allowances apportioned under § 82.11.

| Control Period | Class I substances in group I (In percent) | Class I substances in group VI (In percent) |
|---|---|---|
| 2006 | 50 | 80 |
| 2007 | 15 | 80 |
| 2008 | 15 | 80 |
| 2009 | 15 | 80 |

| Control Period | Class I substances in group I (In percent) | Class I substances in group VI (In percent) |
|---|---|---|
| 2010 | 0 | 80 |
| 2011 | 0 | 80 |
| 2012 | 0 | 80 |
| 2013 | 0 | 80 |
| 2014 | 0 | 80 |
| 2015 | 0 | 0 |

* * * * *

[FR Doc. 05–24606 Filed 12–28–05; 8:45 am]

**BILLING CODE 6560–50–P**

## ENVIRONMENTAL PROTECTION AGENCY

## 40 CFR Part 82

**[FRL–8016–7]**

**RIN 2060–AM56**

## Protection of Stratospheric Ozone: Extension of Global Laboratory and Analytical Use Exemption for Essential Class I Ozone Depleting Substances

**AGENCY:** Environmental Protection Agency (EPA).

**ACTION:** Final rule.

**SUMMARY:** EPA is taking final action to extend the global laboratory and analytical use exemption for production and import of class I ozone-depleting substances from December 31, 2005, to December 31, 2007, consistent with recent actions by the Parties to the Montreal Protocol on Substances that Deplete the Ozone Layer. The exemption allows persons in the United States to produce and import controlled substances for laboratory and analytical uses that have not been already identified by EPA as nonessential.

**EFFECTIVE DATE:** This final rule is effective on January 1, 2006.

**ADDRESSES:** EPA has established a docket for this action under Docket ID No. OAR–2004–0064. All documents in the docket are listed in the EDOCKET index at *http://www.epa.gov/edocket*. Although listed in the index, some information is not publicly available, i.e., CBI or other information whose disclosure is restricted by statute. Certain other material, such as copyrighted material, is not placed on the Internet and will be publicly available only in hard copy form. Publicly available docket materials are available either electronically in EDOCKET or in hard copy at the Air Docket, EPA/DC, EPA West, Room B102, 1301 Constitution Ave., NW., Washington, DC. This Docket Facility is open from 8:30 a.m. to 4:30 p.m., Monday through Friday, excluding legal holidays. The Public Reading Room is open from 8:30 a.m. to 4:30 p.m., Monday through Friday, excluding legal holidays. The telephone number for the Public Reading Room is (202) 566–1744, and the telephone number for the Air Docket is (202) 566–1742.

**FOR FURTHER INFORMATION CONTACT:** Hodayah Finman, U.S. Environmental Protection Agency, Office of Air and Radiation, Stratospheric Protection Division (6205J), 1200 Pennsylvania Avenue, NW., Washington, DC 20460; telephone number: (202) 343–9246; fax numbers: (202) 343–2338; *finman.hodayah@epa.gov*. You may also visit the EPA's Ozone Depletion Web site at *www.epa.gov/ozone* for further information about EPA's Stratospheric Ozone Protection regulations, the science of ozone layer depletion, and other related topics.

**SUPPLEMENTARY INFORMATION:** This final rule concerns the exemption for laboratory and analytical uses from CAA restrictions on the consumption and production of class I controlled substances. In May 2005, EPA proposed extending this exemption program from December 31, 2005, to December 31, 2007, consistent with action taken by the Parties to the Montreal Protocol (70 FR 25726, May 13, 2005). Today's action finalizes the proposed extension. In addition, the Agency solicited comment on clarifying the status of methyl bromide, a class I controlled substance, under the laboratory and analytical use exemption program. EPA is deferring final action on that aspect of the proposed rule.

Section 553(d) of the Administrative Procedure Act (APA), 5 U.S.C., Chapter 5, generally provides that rules may not take effect earlier than 30 days after they are published in the **Federal Register**. Today's final rule is issued under section 307(d) of the CAA, which states: ''The provisions of section 553 through 557 * * * of Title 5 shall not, except as expressly provided in this subsection, apply to actions to which this subsection applies.'' CAA section 307(d)(1). Thus, section 553(d) of the APA does not apply to this rule. EPA nevertheless is acting consistently with the policies underlying APA section 553(d) in making this rule effective on January 1, 2006 APA section 553(d) provides an exception for any action that grants or recognizes an exemption or relieves a restriction. Today's final rule extends an exemption from the phaseout of class I ozone-depleting substances. Because the current exemption expires at the end of 2005, EPA is making this rule effective immediately to ensure that the exemption will not lapse.

### Table of Contents

I. Background on the Montreal Protocol and the Global Laboratory and Analytical Use Exemption
II. Extension of the Global Laboratory and Analytical Use Exemption
III. Applicability of the Global Laboratory and Analytical Use Exemption to Methyl Bromide
IV. Statutory and Executive Order Reviews
A. Executive Order No. 12866: Regulatory Planning and Review
B. Paperwork Reduction Act
C. Regulatory Flexibility Act
D. Unfunded Mandates Reform Act
E. Executive Order No. 13132: Federalism
F. Executive Order No. 13175: Consultation and Coordination With Indian Tribal Governments
G. Executive Order No. 13045: Protection of Children From Environmental Health & Safety Risks
H. Executive Order No. 13211: Actions That Significantly Affect Energy Supply, Distribution, or Use
I. National Technology Transfer Advancement Act
J. Congressional Review Act

### I. Background on the Montreal Protocol and the Global Laboratory and Analytical Use Exemption

The Montreal Protocol on Substances that Deplete the Ozone Layer (Protocol) is the international agreement to reduce and eventually eliminate the production and consumption [1] of all stratospheric ozone-depleting substances (ODSs). The elimination of production and consumption of ODSs is accomplished through adherence to phaseout schedules for specific class I ODSs,[2] including: chlorofluorocarbons (CFCs), halons, carbon tetrachloride, and methyl chloroform. The Clean Air Act, as amended in 1990 and 1998, requires EPA to promulgate regulations implementing the Protocol's phaseout schedules in the United States. Those regulations are codified at 40 CFR part 82. As of January 1, 1996, production and import of most class I ODSs were phased out in developed countries, including the United States.

However, the Protocol provides exemptions that allow for the continued import and/or production of ODSs for specific uses. Under the Protocol, for

[1] ''Consumption'' is defined as the amount of a substance produced in the United States, plus the amount imported into the United States, minus the amount exported to Parties to the Montreal Protocol (*see* Section 601(6) of the Clean Air Act). Stockpiles of class I ODSs produced or imported prior to the 1996 phaseout may be used for purposes not expressly banned at 40 CFR part 82.

[2] Class I ozone depleting substances are listed at 40 CFR part 82, subpart A, appendix A.

most class I ODSs, the Parties may collectively grant exemptions to the ban on production and import of ODSs for uses that they determine to be ''essential.'' For example, with respect to CFCs, Article 2A(4) provides that the phaseout will apply ''save to the extent that the Parties decide to permit the level of production or consumption that is necessary to satisfy uses agreed by them to be essential.'' Similar language appears in the control provisions for halons (Art. 2B), carbon tetrachloride (Art. 2D), methyl chloroform (Art. 2E), hydrobromochlorofluorocarbons (Art. 2G), and bromochloromethane (Art. 2I). As defined by Decision IV/25 of the Parties, use of a controlled substance is essential only if (1) it is necessary for the health, safety or is critical for the functioning of society (encompassing cultural and intellectual aspects), and (2) there are no available technically and economically feasible alternatives or substitutes that are acceptable from the standpoint of environment and health.

Decision X/19 under the Protocol (taken in 1998) allowed a general exemption for essential laboratory and analytical uses through December 31, 2005. EPA included this exemption in our regulations at 40 CFR part 82, subpart A. While the Clean Air Act does not specifically provide for this exemption, EPA determined that an exemption for essential laboratory and analytical uses was allowable under the Act as a *de minimis* exemption. EPA addressed the *de minimis* exemption in the final rule of March 13, 2001 (66 FR 14760–14770).

Decision X/19 also asked the Protocol's Technology and Economic Assessment Panel (TEAP), a group of technical experts from member countries, to report annually on procedures that could be performed without the use of controlled substances and stated that at future meetings the Parties would decide whether such procedures should no longer be eligible for exemptions. Based on the TEAP's recommendation, the Parties to the Protocol decided in 1999 (Decision XI/15) that the general exemption no longer applied to the following uses: Testing of oil and grease, and total petroleum hydrocarbons in water; testing of tar in road-paving materials; and forensic finger-printing. EPA incorporated this exclusion at Appendix G to Subpart A of 40 CFR part 82 on February 11, 2002 (67 FR 6352).

Subsequently, in its May 2003 progress report the TEAP noted, ''No new non-ODS methods have been forthcoming which would enable the TEAP to recommend the elimination of further uses of controlled substances for analytical and laboratory uses'' (p. 106, see Air Docket OAR–2004–0064). Based on this statement, and in consideration of the pending cessation of the laboratory use exemption in 2005, the European Community proposed an extension of the exemption that would allow further time for development of non-ODS methods. At their fifteenth Meeting in November 2003, the Parties adopted the proposal in Decision XV/8, which extended the global exemption for laboratory and analytical uses to December 31, 2007.

EPA's regulations regarding this exemption at 40 CFR 82.8(b) currently state, ''A global exemption for class I controlled substances for essential laboratory and analytical uses shall be in effect through December 31, 2005 subject to the restrictions in appendix G of this subpart, and subject to the record-keeping and reporting requirements at § 82.13(u) though (x). There is no amount specified for this exemption.'' Because certain laboratory procedures continue to require the use of class I substances in the United States, and because non-ODS replacements for the class I substances have not been identified for all uses, EPA is revising 40 CFR 82.8(b) to reflect the extension of the exemption to 2007 consistent with Decision XV/8. For a more detailed discussion of the reasons for the exemption, refer to the March 13, 2001, **Federal Register** notice.

## II. Extension of the Global Laboratory and Analytical Use Exemption

With today's action, EPA is extending the laboratory and analytical use exemption from December 31, 2005, to December 31, 2007. This exemption allows for production and import of certain ODSs to meet laboratory and analytical needs.

EPA received three sets of comments on the proposed rule (70 FR 25726), two of which did not support extending the exemption and one late comment which did support extending the exemption. One commenter indicated that as long as there is an exemption program, industry will not have an incentive to seek alternatives. EPA believes that the time-limited nature of the exemption program, first through 2005 and now through 2007, does provide industry with an incentive to continue to explore alternatives. The Agency notes that many of the exempted uses are for niche applications or for experimental work of importance to society. For example, some federal and state laws, including regulations issued under the Clean Air Act and the Clean Water Act, require testing of the water, soil, or air to measure compliance with environmental standards. A pure sample of an ODS may be necessary to properly calibrate the testing equipment and effectively monitor the presence of chemicals of interest in the environment. A fuller description of laboratory and analytical uses may be found in EPA's 2001 rulemaking on the topic (66 FR 14760) and in the comments in the accompanying paper docket #A–93–39.

Furthermore, EPA notes that total consumption (defined as production plus imports minus exports) for laboratory uses is small relative to baseline and has declined over time. The amount of phased-out class I substances being supplied to laboratories under this exemption decreased each year since 1997 to reach the level of eight metric tons in 2001 (approximately one-quarter the amount supplied in 1997), according to EPA's tracking system for ODSs.

Another commenter expressed concern that the exemption would be phased out ''eventually'' as described in the proposal and suggested that the exemption should last only another two years. In today's action, EPA is extending the laboratory and analytical use exemption by two years recognizing, however, that after December 2007 there still may be a need for this exemption. Should the Parties to the Montreal Protocol take a decision to further extend the exemption beyond 2007, EPA will seek comment on a new timeframe for the exemption.

The commenter continues to express concern that the exemption benefits companies at the expense of children and other members of the public. As described above, this exemption services the research and analytical community who are often engaged in work to protect the public. The laboratory and analytical exemption was agreed to by the Parties to the Montreal Protocol in Decisions X/19 and XV/8 as part of the careful balancing intrinsic in any public policy discussion. As discussed in the March 2001 notice, the controls in place for laboratory and analytical uses provide adequate assurance that very little, if any, environmental damage will result from the handling and disposal of the small amounts of class I ODSs used in such applications. Therefore, EPA does not anticipate significant environmental impacts on the ozone layer as a result of today's action.

## III. Applicability of the Global Laboratory and Analytical Use Exemption to Methyl Bromide

As of January 1, 2005, production and import of methyl bromide is no longer allowed in the United States, except for limited exemptions (40 CFR 82.4(d)). Methyl bromide is a class I controlled substance used chiefly as a fumigant for soil treatment and pest control. In the proposed rule, EPA sought comment on whether the global laboratory exemption should include methyl bromide and also sought information on laboratory and analytical processes that involve the use of small quantities of methyl bromide. EPA only received one comment and it was general in nature. The commenter indicated that she did not support any exemptions for methyl bromide. Recognizing that further discussion of whether the global laboratory exemption should include methyl bromide may occur at a future meeting of the Parties to the Montreal Protocol, EPA is deferring final action on this aspect of the proposed rule.

## IV. Statutory and Executive Order Reviews

### *A. Executive Order 12866: Regulatory Planning and Review*

Under Executive Order 12866 (58 FR 51735 (October 4, 1993)), the Agency must determine whether the regulatory action is ''significant'' and therefore subject to OMB review and the requirements of the Executive Order. The Order defines ''significant regulatory action'' as one that is likely to result in a rule that may: (1) Have an annual effect on the economy of $100 million or more or adversely affect in a material way the economy, a sector of the economy, productivity, competition, jobs, the environment, public health or safety, or State, local, or tribal governments or communities; (2) create a serious inconsistency or otherwise interfere with an action taken or planned by another agency; (3) materially alter the budgetary impact of entitlements, grants, user fees, or loan programs or the rights and obligations of recipients thereof; or (4) raise novel legal or policy issues arising out of legal mandates, the President's priorities, or the principles set forth in the Executive Order.

It has been determined that this rule is not a ''significant regulatory action'' under the terms of Executive Order 12866 and is therefore not subject to OMB review.

### *B. Paperwork Reduction Act*

This action does not impose any new information collection burden because EPA is not creating new information or reporting requirements. However, the Office of Management and Budget (OMB) has previously approved the information collection requirements contained in the existing regulations, as part of the final rule promulgated by the Agency on May 10, 1995, under the provisions of the Paperwork Reduction Act, 44 U.S.C. 3501 *et seq.* and has assigned OMB control number 2060–0170 (EPA ICR number 1432). A copy of the OMB approved Information Collection Request (ICR) may be obtained from Susan Auby, Collection Strategies Division; U.S. Environmental Protection Agency (2822T); 1200 Pennsylvania Ave., NW., Washington, DC 20460 or by calling (202) 566–1672.

Burden means the total time, effort, or financial resources expended by persons to generate, maintain, retain, or disclose or provide information to or for a Federal agency. This includes the time needed to review instructions; develop, acquire, install, and utilize technology and systems for the purposes of collecting, validating, and verifying information, processing and maintaining information, and disclosing and providing information; adjust the existing ways to comply with any previously applicable instructions and requirements; train personnel to be able to respond to a collection of information; search data sources; complete and review the collection of information; and transmit or otherwise disclose the information.

An agency may not conduct or sponsor, and a person is not required to respond to a collection of information unless it displays a currently valid OMB control number. The OMB control numbers for EPA's regulations in 40 CFR are listed in 40 CFR part 9.

### *C. Regulatory Flexibility Act*

EPA has determined that it is not necessary to prepare a regulatory flexibility analysis in connection with this final rule.

For purposes of assessing the impact of today's rule on small entities, the term small entities is defined as: (1) A Pharmaceutical preparations manufacturing business (NAICS code 325412); (2) a small governmental jurisdiction that is a government of a city, county, town, school district or special district with a population of less than 50,000; and (3) a small organization that is any not-for-profit enterprise which is independently owned and operated and is not dominant in its field.

After considering the economic impacts of today's final rule on small entities, EPA has concluded that this action will not have a significant economic impact on a substantial number of small entities. In determining whether a rule has a significant economic impact on a substantial number of small entities, the impact of concern is any significant adverse economic impact on small entities, since the primary purpose of the regulatory flexibility analyses is to identify and address regulatory alternatives ''which minimize any significant economic impact of the proposed rule on small entities.'' 5 U.S.C. 603 and 604. Thus, an agency may conclude that a rule will not have a significant economic impact on a substantial number of small entities if the rule relieves regulatory burden, or otherwise has a positive economic effect on all of the small entities subject to the rule.''

This rule provides an otherwise unavailable benefit to those companies that obtain ozone depleting substances under the essential laboratory and analytical use exemption. Today's action will extend the Global Laboratory and Analytical Use Exemption (The Lab Exemption) from its current expiration date of December 31, 2005 to December 31, 2007. The Lab Exemption allows companies to produce CFCs and other Class I ozone depleting substances (ODS), that are otherwise phased out, for use of very small quantities of ODS in laboratory settings. We have therefore concluded that today's final rule will relieve regulatory burden for all small entities.

### *D. Unfunded Mandates Reform Act*

Title II of the Unfunded Mandates Reform Act of 1995 (UMRA), Public Law 104–4, establishes requirements for Federal agencies to assess the effects of their regulatory actions on State, local, and tribal governments and the private sector. Under section 202 of the UMRA, EPA generally must prepare a written statement, including a cost-benefit analysis, for proposed and final rules with ''Federal mandates'' that may result in expenditures to State, local, and tribal governments, in the aggregate, or to the private sector, of $100 million or more in any one year. Before promulgating an EPA rule for which a written statement is needed, section 205 of the UMRA generally requires EPA to identify and consider a reasonable number of regulatory alternatives and adopt the least costly, most cost-effective or least burdensome alternative that achieves the objectives of the rule. The provisions of section 205 do not apply when they are inconsistent with applicable law. Moreover, section 205 allows EPA to adopt an alternative other

than the least costly, most cost-effective or least burdensome alternative if the Administrator publishes with the final rule an explanation why that alternative was not adopted. Before EPA establishes any regulatory requirements that may significantly or uniquely affect small governments, including tribal governments, it must have developed under section 203 of the UMRA a small government agency plan. The plan must provide for notifying potentially affected small governments, enabling officials of affected small governments to have meaningful and timely input in the development of EPA regulatory proposals with significant Federal intergovernmental mandates, and informing, educating, and advising small governments on compliance with the regulatory requirements.

Today's rule contains no Federal mandates (under the regulatory provisions of Title II of the UMRA) for State, local, or tribal governments or the private sector, since it merely extends the availability of an already available exemption to the ban on production and import of class I ODSs. For the same reason, EPA has determined that this rule contains no regulatory requirements that might significantly or uniquely affect small governments.

*E. Executive Order No. 13132: Federalism*

Executive Order 13132, entitled ''Federalism'' (64 FR 43255, August 10, 1999), requires EPA to develop an accountable process to ensure ''meaningful and timely input by State and local officials in the development of regulatory policies that have federalism implications.'' ''Policies that have federalism implications'' is defined in the Executive Order to include regulations that have ''substantial direct effects on the States, on the relationship between the national government and the States, or on the distribution of power and responsibilities among the various levels of government.''

This final rule does not have federalism implications. It will not have substantial direct effects on the States, on the relationship between the national government and the States, or on the distribution of power and responsibilities among the various levels of government, as specified in Executive Order 13132. Today's rule affects only the companies that produce or import class I ozone-depleting substances for laboratory or analytical uses. Thus, Executive Order 13132 does not apply to this rule.

*F. Executive Order No. 13175: Consultation and Coordination With Indian Tribal Governments*

Executive Order No. 13175, entitled ''Consultation and Coordination with Indian Tribal Governments'' (65 FR 67249, November 9, 2000), requires EPA to develop an accountable process to ensure ''meaningful and timely input by tribal officials in the development of regulatory policies that have tribal implications.'' This final rule does not have tribal implications, as specified in Executive Order No. 13175. Today's final rule does not significantly or uniquely affect the communities of Indian tribal governments. The final rule does not impose any enforceable duties on communities of Indian tribal governments. Thus, Executive Order No. 13175 does not apply to this final rule.

*G. Executive Order No. 13045: Protection of Children From Environmental Health & Safety Risks*

Executive Order No. 13045: ''Protection of Children from Environmental Health Risks and Safety Risks'' (62 FR 19885, April 23, 1997) applies to any rule that: (1) Is determined to be ''economically significant'' as defined under Executive Order 12866, and (2) concerns an environmental health or safety risk that EPA has reason to believe may have a disproportionate effect on children. If the regulatory action meets both criteria, the Agency must evaluate the environmental health or safety effects of the planned rule on children, and explain why the planned regulation is preferable to other potentially effective and reasonably feasible alternatives considered by the Agency.

While this proposed rule is not subject to the Executive Order because it is not economically significant as defined in Executive Order 12866, we nonetheless have reason to believe that the environmental health or safety risk addressed by this action may have a disproportionate effect on children. Depletion of stratospheric ozone results in greater transmission of the sun's ultraviolet (UV) radiation to the earth's surface. The following studies describe the effects on children of excessive exposure to UV radiation: (1) Westerdahl J, Olsson H, Ingvar C. ''At what age do sunburn episodes play a crucial role for the development of malignant melanoma,'' Eur J Cancer 1994; 30A: 1647–54; (2) Elwood JM, Jopson J. ''Melanoma and sun exposure: an overview of published studies,'' Int J Cancer 1997; 73:198–203; (3) Armstrong BK. ''Melanoma: childhood or lifelong sun exposure'' In: Grobb JJ, Stern RS, Mackie RM, Weinstock WA, eds. ''Epidemiology, causes and prevention of skin diseases,'' 1st ed. London, England: Blackwell Science, 1997: 63–6; (4) Whiteman D., Green A. ''Melanoma and Sunburn,'' Cancer Causes Control, 1994: 5:564–72; (5) Kricker A, Armstrong, BK, English, DR, Heenan, PJ. ''Does intermittent sun exposure cause basal cell carcinoma? A case control study in Western Australia,'' Int J Cancer 1995; 60: 489–94; (6) Gallagher, RP, Hill, GB, Bajdik, CD, et. al. ''Sunlight exposure, pigmentary factors, and risk of nonmelanocytic skin cancer I, Basal cell carcinoma,'' Arch Dermatol 1995; 131: 157–63; (7) Armstrong, BK. ''How sun exposure causes skin cancer: an epidemiological perspective,'' Prevention of Skin Cancer. 2004. 89–116. The public is invited to submit or identify peer-reviewed studies and data, of which EPA may not be aware, that assessed results of early life sun exposure.

However, as discussed in the March 13, 2001, **Federal Register** notice, the laboratory and analytical applications addressed in today's proposed rule involve extremely controlled use and disposal of all chemicals, including any ODS. As a result, emissions of ODS into the atmosphere are negligible. In light of the conditions already applied to the global exemption by appendix G to subpart A of 40 CFR part 82, EPA believes that any additional controls on laboratory uses would provide little, if any, benefit.

*H. Executive Order No. 13211: Actions That Significantly Affect Energy Supply, Distribution, or Use*

This rule is not a ''significant energy action'' as defined in Executive Order No. 13211, ''Actions Concerning Regulations That Significantly Affect Energy Supply, Distribution, or Use'' (66 FR 28355 (May 22, 2001)) because it is not a significant regulatory action under Executive Order 12866.

*I. National Technology Transfer Advancement Act*

As noted in the proposed rule, section 12(d) of the National Technology Transfer and Advancement Act of 1995 (''NTTAA''), Public Law. No. 104–113, section 12(d) (15 U.S.C. 272 note) directs EPA to use voluntary consensus standards in its regulatory activities unless to do so would be inconsistent with applicable law or otherwise impractical. Voluntary consensus standards are technical standards (e.g., materials specifications, test methods, sampling procedures, and business practices) that are developed or adopted

by voluntary consensus standards bodies. The NTTAA directs EPA to provide Congress, through OMB, explanations when the Agency decides not to use available and applicable voluntary consensus standards. This action does not involve technical standards. Therefore, EPA did not consider the use of any voluntary consensus standards.

*J. Congressional Review Act*

The Congressional Review Act, 5 U.S.C. 801 et seq., as added by the Small Business Regulatory Enforcement Fairness Act of 1996, generally provides that before a rule may take effect, the agency promulgating the rule must submit a rule report, which includes a copy of the rule, to each House of the Congress and to the Comptroller General of the United States. EPA will submit a report containing this rule and other required information to the U.S. Senate, the U.S. House of Representatives, and the Comptroller General of the United States prior to publication of the rule in the **Federal Register**. A Major rule cannot take effect until 60 days after it is published in the **Federal Register**. This action is not a ''major rule'' as defined by 5 U.S.C. 804(2). This rule will be effective on January 1, 2006.

**List of Subjects in 40 CFR Part 82**

Environmental protection, Administrative practice and procedures, Air pollution control, Chemicals, Exports, Imports, Ozone, Production, Reporting and recordkeeping requirements, Treaties.

Dated: December 22, 2005.

**Stephen L. Johnson,**

*Administrator.*

■ 40 CFR Part 82 is amended as follows:

## PART 82—PROTECTION OF STRATOSPHERIC OZONE

■ 1. The authority citation for part 82 continues to read as follows:

**Authority:** 42 U.S.C. 7414, 7601, 7671–7671q.

### Subpart A—Production and Consumption Controls

■ 2. Section 82.8 is amended by revising paragraph (b) to read as follows:

**§ 82.8 Grant of essential use allowances and critical use allowances.**

* * * * *

(b) A global exemption for class I controlled substances for essential laboratory and analytical uses shall be in effect through December 31, 2007, subject to the restrictions in appendix G of this subpart, and subject to the record keeping and reporting requirements at § 82.13(u) through (x). There is no amount specified for this exemption.

* * * * *

[FR Doc. 05–24612 Filed 12–28–05; 8:45 am]

BILLING CODE 6560–50–P

## FEDERAL COMMUNICATIONS COMMISSION

### 47 CFR Part 64

**[CG Docket No. 03–123; DA 05–3138]**

### Telecommunications Relay Services and Speech-to-Speech Services for Individuals With Hearing and Speech Disabilities

**AGENCY:** Federal Communications Commission.

**ACTION:** Final rule; approval of allocation factor.

**SUMMARY:** In this document, the Commission adopts the Interstate Telecommunications Relay Services (TRS) Fund administrator's (the National Exchange Carrier Association, Inc. (NECA)), proposed interstate allocation factor of 11 percent for determining the number of inbound *two-line* captioned telephone minutes compensable from the Interstate TRS Fund. Also, in this document, the Commission concludes that NECA correctly calculated the factor as directed by the *Two-Line Captioned Telephone Order.* Therefore, the Commission directs NECA to compensate providers of inbound *two-line* captioned telephone calls from the Interstate TRS Fund pursuant to the 11 percent interstate allocation factor retroactively to the effective date of the *Two-Line Captioned Telephone Order.*

**DATES:** Effective December 2, 2005.

**FOR FURTHER INFORMATION CONTACT:** Thomas Chandler, Consumer & Governmental Affairs Bureau, Disability Rights Office at (202) 418–1475 (voice), (202) 418–0597 (TTY), or e-mail at *Thomas.Chandler@fcc.gov.*

**SUPPLEMENTARY INFORMATION:** On July 19, 2005, the Commission released *Telecommunications Relay Services and Speech-to-Speech Services for Individuals with Hearing and Speech Disabilities,* Order (*Two-Line Captioned Telephone Order*), CG Docket No. 03–123, FCC 05–141, which was published in the **Federal Register** on September 14, 2005 (70 FR 54294), concluding that *two-line* captioned telephone service is a type of TRS eligible for compensation from the Interstate TRS Fund, effective October 14, 2005. On August 2, 2005, NECA submitted a proposed interstate allocation factor of 11 percent for inbound *two-line* captioned telephone minutes. This is a summary of the Commission's *Order*, DA 05–3138, adopted December 1, 2005, released December 2, 2005 in CG Docket 03–123, adopting NECA's proposed interstate allocation factor of 11 percent and directing NECA to compensate providers of inbound *two-line* captioned telephone calls from the Interstate TRS Fund pursuant to the 11 percent interstate allocation factor retroactively for the period October 14, 2005 through June 30, 2006. The *Order* does not contain new or modified information collections requirements subject to the Paperwork Reduction Act of 1995 (PRA), Public Law 104–13. In addition, it does not contain any new or modified ''information collection burden for small business concerns with fewer than 25 employees,'' pursuant to the Small Business Paperwork Relief Act of 2002, Public Law 107–198, *see* 44 U.S.C. 3506 (c)(4). The full text of the *Order* and copies of any subsequently filed documents in this matter will be available for public inspection and copying during regular business hours at the FCC Reference Information Center, Portals II, 445 12th Street, SW., Room CY–A257, Washington, DC 20554. The *Order* and copies of subsequently filed documents in this matter may also be purchased from the Commission's duplicating contractor at Portals II, 445 12th Street, SW., Room CY–B402, Washington, DC 20554. Customers may contact the Commission duplicating contractor at their Web site *http://www.bcpiweb.com* or call 1–800–378–3160. To request materials in accessible formats for people with disabilities (Braille, large print, electronic files, audio format), send an e-mail to *fcc504@fcc.gov* or call the Consumer & Governmental Affairs Bureau at (202) 418–0530 (voice), (202) 418–0432 (TTY). The *Order* can also be downloaded in Word or Portable Document Format (PDF) at: *http://www.fcc.gov/cgb/dro.*

**Synopsis**

In the *Two-line Captioned Telephone Order*, the Commission concluded that *two-line* captioned telephone service is a form of TRS eligible for compensation from the Fund. *Two-line Captioned Telephone Order*, 20 FCC Rcd at 13199, paragraph 10. *See generally Telecommunications Relay Services, and Speech-to-Speech Services for Individuals with Hearing and Speech Disabilities*, CC Docket No. 98–67, Declaratory Ruling, 18 FCC Rcd 16121

(August 1, 2003), published at 68 FR 55898, September 29, 2003 (recognizing captioned telephone service as a form of TRS). The Commission also adopted NECA's proposed methodology for determining the number of inbound *two-line* captioned telephone call minutes compensable from the Fund. The Commission noted that for such calls there is currently no way for a provider to determine if a particular call is interstate or intrastate. As a result, the Commission instructed NECA to calculate an allocation factor for such calls that is based on the relationship between interstate and international traditional TRS calls and all intrastate, interstate, and international traditional TRS calls.

On August 2, 2005, NECA proposed an interstate allocation factor of 11 percent for inbound *two-line* captioned telephone minutes. *NECA* Letter at 2. The remaining 89 percent of such calls would be allocated to the intrastate jurisdiction. As NECA explains, it calculated the factor based on the providers' projections of traditional TRS minutes for 2005 and 2006. Interstate and international minutes for both years totaled 24,459,907; local, intrastate, interstate and international minutes totaled 213,957,866. Dividing interstate and international minutes by total minutes results in a proposed interstate factor of 11 percent for interstate inbound *two-line* captioned telephone minutes. On August 24, 2005, the Commission released a Public Notice requesting comment on NECA's proposed allocation factor. *National Exchange Carrier Association (NECA) Submits Proposed Allocation Factor for Inbound Two-Line Captioned Telephone Calls for Compensation from the Interstate Telecommunications Relay Services (TRS) Fund for July 2005 though June 2006*, CG Docket No. 03–123, Public Notice, DA 05–2346 (August 24, 2005) (*NECA Proposed Factor PN*); published at 70 FR 53191, September 7, 2005.

Three comments were filed. Comments were filed by Hamilton Relay, Inc. (Hamilton) (September 22, 2005); Ultratec, Inc. (Ultratec) (September 13, 2005), and New Jersey Protection and Advocacy, Inc. (NJP&A) (September 22, 2005). Hamilton and Ultratec support NECA's proposed 11 percent allocation factor as consistent with the Commission's methodology for allocating 800 and 900 number call minutes. Hamilton Comments at 2–3; Ultratec Comments at 2; *see also Two-line Captioned Telephone Order*, 20 FCC Rcd at 13200, paragraph 12 (discussing allocation methodology used for 800 and 900 number call minutes). Ultratec also seeks clarification of the effective date of the allocation factor. Ultratec Comments at 2–3. NJP&A, however, recommends that the Commission set allocation rates on a statewide basis because in some states a significantly greater percentage of TRS calls are interstate. NJP&A Comments at 2. NJP&A asserts that because New Jersey is located between the two large urban centers of New York and Philadelphia, New Jersey residents are more likely to make interstate calls, and therefore the proposed 11 percent factor would shortchange New Jersey and similar states.

**Discussion**

The Commission adopts NECA's proposed allocation factor of 11 percent for determining the number of inbound two-line captioned telephone minutes compensable from the Interstate TRS Fund. The remaining 89 percent of such minutes shall be compensated by the intrastate jurisdictions. Upon reviewing NECA's filing, the Commission concludes that it correctly calculated the factor as directed by the *Two-line Captioned Telephone Order.*

NJP&A's assertion—that allocation rates be set on a statewide, rather than nationwide, basis—is not directed to NECA's proposed allocation factor, but rather to the allocation methodology itself. Therefore, this is not the appropriate proceeding in which to reconsider the allocation methodology, which the Commission adopted in the *Two-line Captioned Telephone Order. Two-line Captioned Telephone Order*, 20 FCC Rcd at 13200, paragraph 12. A party dissatisfied with the allocation methodology could have challenged that order by filing a petition for reconsideration or a petition for review. Nonetheless, the Commission notes that the allocation factor adopted in this *Order* will benefit the states because presently the states are compensating providers of inbound two-line captioned telephone calls for *all* such calls. *See* The National Exchange Carrier Association, Inc., CC Docket No. 98–67, CG Docket No. 03–123, *Petition for Declaratory Ruling* at 2 (filed December 10, 2004); *Two-line Captioned Telephone Order*, 20 FCC Rcd at 13195, paragraph 1, note 3. Further, the Commission notes that this methodology is the same methodology used for the jurisdictional allocation 800 and 900 number call minutes. *Two-line Captioned Telephone Order*, 20 FCC Rcd at 13198–13199, paragraph 9.

The *Two-line Captioned Telephone Order* became effective October 14, 2005. *Two-line Captioned Telephone Order*, 20 FCC Rcd at 13198–13199, paragraph 23 (order is effective 30 days after publication in the **Federal Register**, which was September 14. 2005). Accordingly, the allocation factor adopted in this Order shall apply to the provision of inbound *two-line* captioned telephone calls for the period of October 14, 2005 through June 30, 2006. Under the Commission's rules, the TRS Fund year runs from July 1 to June 30. 47 CFR 64.604(c)(5)(iii)(H). A new allocation factor will be adopted each year at the same time the TRS compensation rates are adopted. The Commission recognizes that the *NECA Proposed Factor PN* sought comment on the proposed allocation factor for the annual period of July 1, 2005 through June 30, 2006. *NECA Proposed Factor PN* at 1. Because, however, the effective date of the *Two-line Captioned Telephone Order's* conclusion that *two-line* captioned telephone service is a form of TRS compensation from the Interstate TRS Fund was October 14, 1005, no *two-line* captioned telephone calls could be compensated from the Fund prior to that date. Therefore, the allocation factor for inbound two-line captioned telephone calls cannot be applicable prior to that date.

The Commission therefore directs NECA to compensate providers of inbound two-line captioned telephone calls from the Interstate TRS Fund pursuant to the 11 percent interstate allocation factor retroactively to October 14, 2005.

**Final Regulatory Flexibility Certification**

The Regulatory Flexibility Act of 1980, as amended (RFA), requires that an initial regulatory flexibility analysis be prepared for notice-and-comment rule making proceedings, unless the agency certifies that ''the rule will not, if promulgated, have a significant economic impact on a substantial number of small entities.'' *See* 5 U.S.C. 603. The RFA, *see* 5 U.S.C. 601–612, has been amended by the Small Business Regulatory Enforcement Fairness Act of 1996 (SBREFA), Public Law Number 104–121, Title II, 110 Statute 857 (1996). The RFA generally defines the term ''small entity'' as having the same meaning as the terms ''small business,'' ''small organization,'' and ''small governmental jurisdiction.'' 5 U.S.C. 601(6). In addition, the term ''small business'' has the same meaning as the term ''small business concern'' under the Small Business Act. 5 U.S.C. 601(3) (incorporating by reference the definition of ''small-business concern'' in the Small Business Act, 15 U.S.C. 632). Pursuant to 5 U.S.C. 601(3), the statutory definition of a small business

applies ''unless an agency, after consultation with the Office of Advocacy of the Small Business Administration and after opportunity for public comment, establishes one or more definitions of such term which are appropriate to the activities of the agency and publishes such definition(s) in the **Federal Register**.'' A ''small business concern'' is one which: (1) Is independently owned and operated; (2) is not dominant in its field of operation; and (3) satisfies any additional criteria established by the Small Business Administration (SBA). 15 U.S.C. 632. Nationwide, there are approximately 1.6 million small organizations. Independent Sector, The New Nonprofit Almanac & Desk Reference (2002).

The *Order* adopts the interstate allocation factor for inbound two-line captioned telephone calls. As noted above, in August 2003 the Commission concluded that captioned telephone service is a form of TRS, and that eligible providers of such services are eligible to recover their costs in accordance with section 225 of the Communications Act. *See* paragraph 2, *supra; see also Captioned Telephone Declaratory Ruling,* 18 FCC Rcd at 16121, paragraph 1. In the July 2005 *Two-line Captioned Telephone Order,* the Commission concluded that *two-line* captioned telephone service is also a form of TRS eligible for compensation from the Fund. That order also recognized that there is no way to determine if a particular inbound *two-line* captioned telephone call is interstate or intrastate, and therefore adopted an allocation methodology and directed the Interstate TRS Fund administrator to propose an interstate allocation factor. The *Order* adopts the TRS Fund administrator's proposed allocation factor.

The Commission does not believe that the adoption of the interstate allocation factor will have a significant economic impact; however, in the event that it does, it also notes that there are not a substantial number of small entities that will be affected by our action. The SBA has developed a small business size standard for Wired Telecommunications Carriers, which consists of all such firms having 1,500 or fewer employees. 13 CFR 121.201, NAICS code 517110 (changed from 513310 in October 2002). According to Census Bureau data for 1997, there were 2,225 firms in this category which operated for the entire year. U.S. Census Bureau, 1997 Economic Census, Subject Series: Information, ''Establishment and Firm Size (Including Legal Form of Organization),'' Table 5, NAICS code 513310 (issued Oct. 2000). Of this total, 2,201 firms had employment of 999 or fewer employees, and an additional 24 firms had employment of 1,000 employees or more. Thus, under this size standard, the majority of firms can be considered small. (The census data do not provide a more precise estimate of the number of firms that have employment of 1,500 or fewer employees; the largest category provided is ''Firms with 1,000 employees or more.''). Currently, only three providers are providing captioned telephone service and being compensated from the Interstate TRS Fund: CapTel, Inc., Hamilton and Sprint. The Commission expects that only one of these providers may be a small entity under the SBA's small business size standard. In addition, the Interstate Fund Administrator is the only entity that will be required to pay to eligible providers of *two-line* captioned telephone service the costs of providing interstate service.

The Commission will send a copy of the *Order,* including a copy of this Regulatory Flexibility Certification, to the Chief Counsel for Advocacy of the SBA. 5 U.S.C. 605(b).

Federal Communications Commission.

**Jay Keithley,**

*Deputy Bureau Chief, Consumer & Governmental Affairs Bureau.*

[FR Doc. 05–24620 Filed 12–28–05; 8:45 am]

BILLING CODE 6712–01–P

## FEDERAL COMMUNICATIONS COMMISSION

### 47 CFR Part 101

**[WT Docket No. 02–146; FCC 05–45]**

### Allocations and Service Rules for the 71–76 GHz, 81–86 GHz, and 92–95 GHz Bands

**AGENCY:** Federal Communications Commission.

**ACTION:** Final rule; announcement of effective date.

**SUMMARY:** On December 7, 2005, the Office of Management and Budget (OMB) approved the information collection requirements contained in § 101.1523(b) pursuant to OMB Control No. 3060–1070. The Memorandum Opinion and Order, released on March 3, 2005, FCC 05–45, stated that the revision to 47 CFR 101.1523(b) will be effective upon OMB approval. This document announces the effective date of that published rule. Accordingly, the information collection requirements contained in that rule became effective on December 7, 2005.

**DATES:** The revision to § 101.1523(b) published at 70 FR 29985, May 25, 2005, became effective on December 7, 2005.

**FOR FURTHER INFORMATION CONTACT:** David Hu, Esq., Wireless Telecommunications Bureau, Broadband Division, at (202) 418–2487.

**SUPPLEMENTARY INFORMATION:** In a Memorandum Opinion and Order, released on March 3, 2005, *FCC 05–45*, and published in the **Federal Register** on May 25, 2005, 70 FR 29985, the Commission revised its *Allocations and Service Rules for the 71–76 GHz, 81–86 GHz, and 92–95 GHz Bands*, requiring licensees, as part of the link registration process, to submit to the database manager an analysis under the interference protection criteria. This interference analysis requirement is a new and modified information collection, previously approved by OMB (OMB Control No. 3060–1070), and implements the revised § 101.1523(b) of the Commission's rules as published in the **Federal Register** on May 25, 2005.

Federal Communications Commission.

**William F. Caton,**

*Deputy Secretary.*

[FR Doc. 05–24621 Filed 12–28–05; 8:45 am]

BILLING CODE 6712–01–P

## DEPARTMENT OF COMMERCE

### National Oceanic and Atmospheric Administration

### 50 CFR Parts 222 and 223

**[Docket No.050922245–5345–05; I.D. 092005A, 100505D]**

**RIN 0648–AT89**

### Sea Turtle Conservation; Shrimp Trawling Requirements

**AGENCY:** National Marine Fisheries Service (NMFS), National Oceanic and Atmospheric Administration (NOAA), Commerce.

**ACTION:** Temporary rule.

**SUMMARY:** NMFS issues this 30-day temporary rule to allow shrimp fishermen to continue to use limited tow times as an alternative to Turtle Excluder Devices (TEDs) in inshore and offshore waters from the Florida/Alabama border, westward to the Louisiana/Texas border, and extending offshore 20 nautical miles. The previous 30-day variances of the TED requirements were from September 23 through October 23, 2005; October 11 through November 10, 2005; October 22 through November 23, 2005; and from

November 24 through December 23, 2005, for waters affected by Hurricanes Katrina and Rita. These variances were initially for 50 nautical miles, while the most recent variance was for 20 nautical miles. After an investigation, NMFS has determined that excessive debris is still affecting fishermen's ability to use TEDs effectively in an area extending approximately 20 nm offshore. This action is necessary because environmental conditions resulting from Hurricanes Katrina and Rita persist on the fishing grounds, preventing some fishermen from using TEDs effectively.

**DATES:** Effective from December 23, 2005, through 11:59 p.m, local time, January 23, 2006.

**ADDRESSES:** Requests for copies of the National Environmental Policy Act Categorical Exclusion (CE) on this action should be addressed to the Chief, Marine Mammal Division, Office of Protected Resources, NMFS, 1315 East-West Highway, Silver Spring, MD 20910.

**FOR FURTHER INFORMATION CONTACT:** Michael Barnette, 727–551–5794.

**SUPPLEMENTARY INFORMATION:**

## Background

All sea turtles that occur in U.S. waters are listed as either endangered or threatened under the Endangered Species Act of 1973 (ESA). The Kemp's ridley (*Lepidochelys kempii*), leatherback (*Dermochelys coriacea*), and hawksbill (*Eretmochelys imbricata*) turtles are listed as endangered. The loggerhead (*Caretta caretta*) and green (*Chelonia mydas*) turtles are listed as threatened, except for breeding populations of green turtles in Florida and on the Pacific coast of Mexico, which are listed as endangered.

Sea turtles are incidentally taken, and some are killed, as a result of numerous activities, including fishery-related trawling activities in the Gulf of Mexico and along the Atlantic seaboard. Under the ESA and its implementing regulations, the taking of sea turtles is prohibited, with exceptions identified in 50 CFR 223.206(d), or according to the terms and conditions of a biological opinion issued under section 7 of the ESA, or according to an incidental take permit issued under section 10 of the ESA. The incidental taking of turtles during shrimp or summer flounder trawling is exempted from the taking prohibition of section 9 of the ESA if the conservation measures specified in the sea turtle conservation regulations (50 CFR part 223) are followed. The regulations require most shrimp trawlers and summer flounder trawlers operating in the southeastern United States (Atlantic area, Gulf area, and summer flounder sea turtle protection area, see 50 CFR 223.206) to have a NMFS-approved TED installed in each net that is rigged for fishing to allow sea turtles to escape. TEDs currently approved by NMFS include single-grid hard TEDs and hooped hard TEDs conforming to a generic description, the flounder TED, and one type of soft TED B the Parker soft TED (see 50 CFR 223.207).

TEDs incorporate an escape opening, usually covered by a webbing flap, which allows sea turtles to escape from trawl nets. To be approved by NMFS, a TED design must be shown to be 97 percent effective in excluding sea turtles during testing based upon specific testing protocols (50 CFR 223.207(e)(1)). Most approved hard TEDs are described in the regulations (50 CFR 223.207(a)) according to generic criteria based upon certain parameters of TED design, configuration, and installation, including height and width dimensions of the TED opening through which the turtles escape.

The regulations governing sea turtle take prohibitions and exemptions provide for the use of limited tow times as an alternative to the use of TEDs for vessels with certain specified characteristics or under certain special circumstances. The provisions of 50 CFR 223.206(d)(3)(ii) specify that the NOAA Assistant Administrator for Fisheries (AA) may authorize compliance with tow time restrictions as an alternative to the TED requirement if the AA determines that the presence of algae, seaweed, debris, or other special environmental conditions in a particular area makes trawling with TED-equipped nets impracticable. The provisions of 50 CFR 223.206(d)(3)(i) specify the maximum tow times that may be used when tow time limits are authorized as an alternative to the use of TEDs. Each tow may be no more than 55 minutes from April 1 through October 31 and no more than 75 minutes from November 1 through March 31, as measured from the time that the trawl doors enter the water until they are removed from the water. These tow time limits are designed to minimize the level of mortality of sea turtles that are captured by trawl nets not equipped with TEDs.

## Recent Events

On September 12, 2005, the NMFS Southeast Regional Administrator received requests from the Marine Fisheries Division of the Alabama Department of Conservation and Natural Resources (ALDCNR) and the Louisiana Department of Wildlife and Fisheries (LADWF) to allow the use of tow times as an alternative to TEDs in inshore and offshore waters because of excessive storm related debris on the fishing grounds as a result of Hurricane Katrina. NMFS received a similar request from the Mississippi Department of Marine Resources (MDMR) on September 13. On September 27, 2005, the NMFS Southeast Regional Administrator received requests from the LADWF and the Texas Parks and Wildlife Department (TPWD) to allow the use of tow times as an alternative to TEDs in inshore and offshore waters because of excessive storm related debris on the fishing grounds as a result of Hurricane Rita. Subsequent to these requests, NMFS issued 30-day exemptions to the TED requirements from September 23 through October 23, 2005, and October 11 through November 10, 2005, for waters affected by Hurricanes Katrina and Rita, respectively (70 FR 56593 and 70 FR 60013, respectively).

On October 11, 2005, the NMFS Southeast Regional Administrator received requests from the ALDCNR, MDMR, LADWF, and the TPWD for an additional 30-day period allowing the use of restricted tow times as an alternative to TEDs in inshore and offshore waters because of excessive storm-related debris that was still present on the fishing grounds as a result of Hurricanes Katrina and Rita. Subsequent to these requests, NMFS issued a 30-day extension encompassing both previous exemptions to the TED requirements, from October 23, 2005, through November 23, 2005 (70 FR 61911).

On November 15, 2005, the NMFS Southeast Regional Administrator received requests from the Marine Fisheries Division of the ALDCNR, MDMR, LADWF, and TPWD for an additional 30-day period allowing the use of restricted tow times as an alternative to TEDs in state and federal waters because of excessive storm-related debris on the fishing grounds as a result of Hurricanes Katrina and Rita. Subsequent to these requests, NMFS issued a 30-day extension encompassing both previous exemptions to the TED requirements, from November 23, 2005, through December 23, 2005 (70 FR 71406).

On December 7, 2005, the NMFS Southeast Regional Administrator received a request from the Marine Fisheries ALDCNR to allow the use of tow times as an alternative to TEDs in inshore and offshore waters because of excessive storm related debris on the fishing grounds as a result of Hurricane Katrina. NMFS received similar requests on December 19, 2005, from MDMR and

LADWF due to the cumulative effects of Hurricanes Katrina and Rita. The area cumulatively affected by the two hurricanes currently extends from the Florida/Alabama border, westward to the Louisiana/Texas border, and offshore 20 nautical miles. ALDCNR interviewed shrimp fishermen who indicated there are still serious debris problems out to 20 nautical miles, while MDMR's investigation indicates debris problems are still very serious nearshore, with continuing problems into the exclusive economic zone. LADWF's investigation and interviews with shrimp fishermen indicates there are still significant debris problems in state and federal waters. Interviews between these state agencies and NMFS indicated some shrimp fishermen continue to use TEDs in these areas as the TED is able to exclude debris from the trawl; however, these interviews also indicated there are still significant amounts of large debris that can render TEDs ineffective at releasing turtles. When a TED is clogged with debris it neither catches shrimp nor excludes turtles effectively.

**Special Environmental Conditions**

The AA finds that debris washed into inshore and offshore waters by Hurricanes Katrina and Rita off Alabama, westward to the Louisiana/Texas border, and extending offshore 20 nautical miles, has created ongoing special environmental conditions that make trawling with TED-equipped nets impracticable. Therefore, the AA issues this notification to extend the current authorization for the use of restricted tow times as an alternative to the use of TEDs in inshore and offshore waters off Alabama, westward to the Louisiana/Texas border, and extending offshore 20 nautical miles, through 11:59 p.m., local time, January 23, 2006. Tow times must be limited to no more than 75 minutes measured from the time trawl doors enter the water until they are retrieved from the water.

**Continued Use of TEDs**

NMFS encourages shrimp trawlers in the affected areas to continue to use TEDs if possible, even though they are authorized under this action to use restricted tow times.

NMFS' gear experts have provided several general operational recommendations to fishermen to maximize the debris exclusion ability of TEDs that may allow some fishermen to continue using TEDs without resorting to restricted tow times. To exclude debris, NMFS recommends the use of hard TEDs made of either solid rod or of hollow pipe that incorporate a bent angle at the escape opening, in a bottom-opening configuration. In addition, the installation angle of a hard TED in the trawl extension is an important performance element in excluding debris from the trawl. High installation angles can trap debris either on or in front of the bars of the TED; NMFS recommends an installation angle of 45°, relative to the normal horizontal flow of water through the trawl, to optimize the TED's ability to exclude turtles and debris. Furthermore, the use of accelerator funnels, which are allowable modifications to hard TEDs, is not recommended in areas with heavy amounts of debris or vegetation. Lastly, the webbing flap that is usually installed to cover the turtle escape opening may be modified to help exclude debris quickly: the webbing flap can either be cut horizontally to shorten it so that it does not overlap the frame of the TED or be slit in a fore-and-aft direction to facilitate the exclusion of debris. The use of the double cover flap TED will also aid in debris exclusion.

All of these recommendations represent legal configurations of TEDs for shrimpers fishing in the affected areas. This action does not authorize any other departure from the TED requirements, including any illegal modifications to TEDs. In particular, if TEDs are installed in trawl nets, they may not be sewn shut.

**Alternative to Required Use of TEDs**

The authorization provided by this temporary rule applies to all shrimp trawlers that would otherwise be required to use TEDs in accordance with the requirements of 50 CFR 223.206(d)(2) who are operating in inshore and offshore waters affected by Hurricanes Katrina and Rita off Alabama, westward to the Louisiana/Texas border, and extending offshore 20 nautical miles, through January 23, 2006. Through this temporary rule, shrimp trawlers may choose either restricted tow times or TEDs to comply with the sea turtle conservation regulations, as prescribed above.

**Alternative to Required Use of TEDs; Termination**

The AA, at any time, may withdraw or modify this temporary authorization to use tow time restrictions in lieu of TEDs through publication of a notice in the **Federal Register**, if necessary to ensure adequate protection of endangered and threatened sea turtles. Under this procedure, the AA may modify the affected area or impose any necessary additional or more stringent measures, including more restrictive tow times, synchronized tow times, or withdrawal of the authorization if the AA determines that the alternative authorized by this temporary rule is not sufficiently protecting turtles or no longer needed. The AA may also terminate this authorization if information from enforcement, state authorities, or NMFS indicates compliance cannot be monitored effectively. This authorization will expire automatically at 11:59 p.m., local time, January 23, 2006, unless it is explicitly extended through another notification published in the **Federal Register**.

**Classification**

This action has been determined to be not significant for purposes of Executive Order 12866.

The AA has determined that this action is necessary to respond to special environmental conditions to allow effective fishing for shrimp, while providing adequate protection for endangered and threatened sea turtles pursuant to the ESA and applicable regulations.

Pursuant to 5 U.S.C. 553(b)(B), the AA finds that there is good cause to waive prior notice and opportunity to comment on this rule. The AA finds that unusually high amounts of debris has created ongoing special environmental conditions that make trawling with TED-equipped nets impracticable. Prior notice and opportunity to comment are impracticable and contrary to the public interest in this instance because providing notice and comment would prevent the agency from providing the affected industry relief from the effects of Hurricanes Katrina and Rita in a timely manner.

The AA finds that there is good cause to waive the 30-day delay in effective date pursuant to 5 U.S.C. 553(d)(3) to provide alternatives to comply with the sea turtle regulations in a timely manner. Many fishermen may be unable to operate under the special environmental conditions created by Hurricanes Katrina and Rita without an alternative to using TEDs. Providing a 30-day delay in effective date would prevent the agency from providing the affected industry relief from the effects of Hurricanes Katrina and Rita in a timely manner. For the reasons stated above, the AA finds that this temporary rule should not be subject to a 30-day delay in effective date, pursuant to 5 U.S.C. 553(d)(1).

Since prior notice and an opportunity for public comment are not required to be provided for this action by 5 U.S.C. 553, or by any other law, the analytical requirements of 5 U.S.C. 601 *et seq.* are inapplicable.

On November 18, 2005, a CE determination was completed for NMFS' issuance of temporary rules authorizing the use of § 223.206(d)(3)(ii). The proposed extension would also be encompassed by the November 18 CE.

Dated: December 23, 2005.

**John Oliver,**

*Deputy Assistant Administrator for Operations, National Marine Fisheries Service.*

[FR Doc. 05–24604 Filed 12–23–05; 12:48 pm]

**BILLING CODE 3510–22–S**

---

## DEPARTMENT OF COMMERCE

## National Oceanic and Atmospheric Administration

## 50 CFR Part 622

**[Docket No. 051114298–5338–02; I.D. 110105C]**

**RIN 0648–AT12**

## Fisheries of the Caribbean, Gulf of Mexico, and South Atlantic; Gulf of Mexico Commercial Grouper Fishery; Trip Limit

**AGENCY:** National Marine Fisheries Service (NMFS), National Oceanic and Atmospheric Administration (NOAA), Commerce.

**ACTION:** Final rule.

**SUMMARY:** NMFS issues this final rule to implement a regulatory amendment to the Fishery Management Plan for the Reef Fish Resources of the Gulf of Mexico (FMP) prepared by the Gulf of Mexico Fishery Management Council (Council). This final rule establishes a 6,000-lb (2,722-kg) commercial trip limit for shallow-water and deep-water grouper, combined, in the exclusive economic zone of the Gulf of Mexico. The intended effect of this final rule is to minimize the effects of derby fishing and prolong the fishing season.

**DATES:** This final rule is effective January 1, 2006.

**ADDRESSES:** Copies of the Final Regulatory Flexibility Analysis (FRFA) are available from Andy Strelcheck, NMFS, Southeast Regional Office, 263 13th Avenue South, St. Petersburg, FL 33701; telephone: 727–824–5305; fax: 727–824–5308; e-mail: *andy.strelcheck@noaa.gov*.

**FOR FURTHER INFORMATION CONTACT:** Andy Strelcheck, telephone: 727–824–5374, fax: 727–824–5308, e-mail: *andy.strelcheck@noaa.gov*.

**SUPPLEMENTARY INFORMATION:** The reef fish fishery of the Gulf of Mexico is managed under the FMP. The FMP was prepared by the Council and is implemented under the authority of the Magnuson-Stevens Fishery Conservation and Management Act (Magnuson-Stevens Act) by regulations at 50 CFR part 622.

In accordance with the FMP's framework procedure, the Council recommended, and NMFS published, a proposed rule (70 FR 70575, November 22, 2005) to establish a 6,000-lb (2,722-kg) commercial trip limit for shallow-water and deep-water grouper, combined, in the exclusive economic zone of the Gulf of Mexico. Public comments on the proposed rule were requested through December 7, 2005. A summary of the comments and NMFS' responses are provided below. The rationale for this trip limit is provided in the regulatory amendment and in the preamble to the proposed rule and is not repeated here.

### Comments and Responses

Following is a summary of the comments received on the proposed rule and NMFS' responses.

*Comment 1:* One commenter supported the 6,000-lb (2,722-kg) commercial trip limit, but recommended reducing the trip limit once 50 and 75 percent of the quota was reached.

*Response:* Six trip limit alternatives were considered, including no action and the preferred 6,000-lb (2,722-kg) gutted weight grouper trip limit. Several other stepped trip limit alternatives were also considered, which would have reduced the trip limit during the fishing year when a certain percentage of either the shallow-water grouper or red grouper quota was reached. These stepped trip limit alternatives were not selected because the lower trip limits were estimated to generate excessive negative economic impacts, particularly for longline vessels and vessels operating off the west-central coast of Florida.

*Comment 2:* One commenter supported the trip limit, but recommended longer closures or a 10-day open season at the beginning of each month.

*Response:* The intent of the 6,000-lb (2,722-kg) gutted weight commercial grouper trip limit is to prolong the fishing season and reduce the effects of derby fishing. Longer closures or 10-day open seasons are contrary to the action's objective of reducing the effects of derby fishing and extending the commercial grouper fishing season.

*Comment 3:* One commenter opposed the trip limit and believed the trip limit was too large and should be less.

*Response:* Several alternatives with lower trip limits than the preferred 6,000-lb (2,722-kg) gutted weight trip limit were considered. These more restrictive trip limit alternatives were not selected because the lower trip limits were estimated to generate excessive negative economic impacts, particularly for longline vessels and vessels operating off the west-central coast of Florida.

*Comment 4:* One commenter supported the trip limit, but questioned the effectiveness of the trip limit if it resulted in additional fishing trips.

*Response:* An environmental assessment (EA) was conducted for this action, which evaluated the effects of the trip limit on the physical, biological, social, and economic environment. As part of the EA, an economic simulation analysis was conducted, which allowed for extra fishing trips to be taken in response to lower trip limits. Extra trips were only allowed to occur if revenues were sufficient to cover trip costs. Based on the results of this simulation analysis, the shallow-water grouper fishery was projected to close 2–14 days earlier than if extra trips were not allowed to be taken.

*Comment 5:* One commenter suggested longline fishing gear should be eliminated.

*Response:* The regulatory amendment only proposed trip limits for reducing the effects of derby fishing and moderating the rate of commercial grouper harvest. The regulatory amendment did not provide notice or seek comment on elimination of any type of gear from the fishery. Therefore, this comment is beyond the scope of the regulatory amendment and this rule.

*Comment 6:* The Southern Offshore Fishing Association (SOFA) indicated they were in favor of trip limits, but believed the 6,000-lb (2,722-kg) trip limit would have adverse economic effects on larger vessels. They suggested two alternative trip limit proposals be considered. The first proposal is to implement a tiered trip limit with a 7,500-lb (3,402-kg) limit for longline vessels and 2,500-lb (1,134-kg) trip limit for vertical-line vessels. The second proposal is to implement a 7,500-lb (3,402-kg) trip limit for vessels with a documented length over 45 ft (13.7 m), a 5,500-lb (2,495-kg) trip limit for vessels with a documented length under 45 ft (13.7 m), and a 1-month closure of the shallow-water grouper fishery from May 20 to June 20.

*Response:* At its October 3–6, 2005 meeting, the Council reviewed a proposal by SOFA for a 7,500-lb (3,402-kg) trip limit and additional closed season. In response to this proposal,

which is outlined in the regulatory amendment, the initial trip limit was increased from 5,500-lb (2,495-kg) to 6,000 lb (2,722-kg) to help defray increasing costs occurring in the fishery and larger vessels' higher operating costs. The Council also considered seasonal closures in conjunction with trip limits. SOFA suggested a 1-month closure (May 15–June 15) at the Council's October meeting, and this proposal was analyzed as a variant of Alternative 3 in the regulatory amendment. However, Alternative 3 was rejected in favor of the preferred alternative in seeking a compromise between limiting net revenue losses while allowing for a longer season.

The concept of setting grouper trip limits by fishing gear was not examined in the regulatory amendment, but was considered in Secretarial Amendment 1 to the Reef Fish FMP. The Council concluded gear-based trip limits would increase the complexity of the regulations and, thus, decrease compliance and enforceability. Further, gear-based trip limits could encourage fishermen to convert their vessels to the gear with the highest trip limit and ultimately increase rather than decrease harvest rates. Finally, SOFA's gear-based proposal does not address other gear types used in the fishery such as fish traps and spearguns.

**Classification**

The Administrator, Southeast Region, NMFS, determined the regulatory amendment, which this proposed rule would implement, is necessary for the conservation and management of the commercial grouper fishery in the Gulf of Mexico and that it is consistent with the Magnuson-Stevens Act and other applicable laws.

The Assistant Administrator for Fisheries, NOAA (AA) finds there is good cause under 5 U.S.C. 553(d)(3) to waive the required 30-day delay in effective date. After evaluating nearly a full year of the fishery's performance under the existing trip limit structure, NMFS has determined that those trip limits were not sufficiently restrictive to achieve the regulatory objectives of minimizing the adverse socioeconomic effects of derby fishing and extending the length of the fishing season, i.e., avoiding rapid harvest of the quota and an early closure of the fishery. The more restrictive trip limit in this final rule is required to meet these objectives. Delaying the implementation of this final rule beyond January 1, 2006, would result in excessive harvests while the ineffective emergency trip limits are in place. Given the substantial harvesting capacity of the commercial grouper fishery, any delay in implementing the limits specified by this final rule would result in depressed ex-vessel prices while the higher trip limit is in place and a reduction in the length of the fishing season relative to that expected to be achieved by implementation of the final rule effective January 1, 2006. Numerous vessels in the fishery have the capacity to harvest up to and in excess of 10,000 pounds. Forty-nine trips in excess of 6,000 pounds were reported in January 2005. Further, the fishery has been closed since October 10, 2005, and participants are poised to fish upon opening of the fishery. Given the extended closure of the fishery, if allowed to harvest the higher limit, participants have the capacity and incentive to do so. Any reduction in ex-vessel prices and shortening of the season will result in failure to meet the goals of this action. There are no fishing gear changes or other significant compliance issues that would necessitate a delay in effectiveness of this rule. NMFS will provide timely notification of the more restrictive trip limit in this final rule directly to participants in the fishery via a fishery bulletin mailed to each permitee and via broadcast on NOAA weather radio. The Council intended to take final action on the proposed rule at their September 2005 meeting in New Orleans, Louisiana, which would have accommodated the 30-day delay in the effective date. However, as a consequence of Hurricane Katrina, the Council was prevented from taking final action until their October meeting, delaying submission for Secretarial review until October 12. The 30-day delay would have required publication of the final rule on or before December 1. However, the available time between Council submission and December 1 was insufficient to allow the required and necessary review and approval of the final rule.

This final rule has been determined to be not significant for purposes of Executive Order 12866.

NMFS prepared an FRFA. The FRFA incorporates the initial regulatory flexibility analysis (IRFA), a summary of the significant issues raised by the public comments in response to the IRFA, NMFS responses to those comments, and a summary of the analyses completed to support the action.

This final rule establishes a 6000-lb (2,722-kg) trip limit for the commercial grouper fishery in the Gulf of Mexico. The purpose of this final rule is to reduce the adverse socioeconomic effects of derby fishing in the commercial sector expected to result if management action is not taken. The Magnuson-Stevens Act provides the statutory basis for the rule.

Six comments that proposed alternative trip limits, longer closures or 10-day seasons, the elimination of one gear sector, or questioned the effectiveness of the action were raised by public comments in response to the proposed rule. A detailed summary of these comments and NMFS' responses is provided in the Comments and Responses section of this final rule. These alternatives were either previously considered or determined to be outside the scope of the objectives for this rule. Where considered, it was determined that either the adverse impacts of these alternatives were greater than those of the rule, or the rule was determined to be a reasonable compromise between limiting net revenue losses while allowing for a longer season. No changes were made to the final rule in response to these comments.

No duplicative, overlapping, or conflicting Federal rules have been identified.

An estimated 1,129 vessels were permitted to engage in commercial fishing for Gulf reef fish (which include grouper) in early 2004, down from 1,718 vessels in 1993. Although a permit moratorium has limited access in this fishery since 1992, transfer of permits is not restricted. Those seeking to enter the fishery can purchase a permit from those seeking to exit the fishery, provided income and other requirements are met for participation in the fishery. Total participation, however, in terms of both the number of permits and the number of vessels landing Gulf reef fish has consistently declined since 1993.

An estimated 1,157 vessels had permits to fish commercially for Gulf reef fish from 2002–2004, and 1,021 vessels had historical, logbook-reported landings of Gulf reef fish. This total includes 928 vessels with landings of Gulf grouper, for which the median estimated gross revenue for all reported landings of fish was approximately $20,000 per vessel per year. Maximum revenue ranged from $478,000–$543,000. The bottom longline and vertical line sectors are the dominant fleets in the fishery. For the bottom longline fleet (162 vessels per year, on average), the median annual gross revenue ranged from $96,000–$102,000 (84–90 percent from grouper). The vertical line fleet (765 vessels per year, on average) had median annual gross revenue of under $17,000 (44–48 percent from grouper). Some vessels use

both gears so the numbers of vessels cannot be added across gear types.

For the 928 vessels with reported landings of Gulf grouper, historical fishery performance resulted in estimated annual average gross revenue of $46 million for all logbook-reported fish in 2002–2004. This includes gross revenue of $39 million for all fish on trips with grouper landings ($25 million from red grouper). The net revenue for these trips was approximately $29 million (annual averages per vessel for 928 vessels are $41,000 for gross revenue, and $31,000 for net revenue). Net revenue for the commercial fishing sector (computed as trip revenue minus trip costs) includes returns to all labor and capital.

Simulation of fishery performance under status quo conditions produced estimates which are slightly lower than historical fishery performance: Gross revenue of approximately $37 million for all fish on trips with grouper landings, and $27 million for net revenue (annual averages per vessel for 922 vessels are $40,000 for gross revenue, and $29,000 for net revenue). Projected net revenue is approximately $10.7 million for the bottom longline fleet (average, $66,000 per vessel per year for 161 vessels), and $14.5 million for the vertical line fleet (average, $19,000 per vessel per year for 748 vessels).

Between 1997 and 2000, there were an average of 123 reef fish dealers actively buying and selling in the grouper market. Of these dealers, 101 dealers (82 percent) sold more than $30,000 per year of domestic grouper on a regular basis. These dealers may hold multiple types of permits. Because the extent of business operation for these dealers is unknown, it is not possible to determine what percentage of their business comes from grouper. Average employment information per reef fish dealer is not known, but total employment in 1997 for reef fish processors in the entire Southeast was estimated at approximately 700 individuals, both part and full time. It is assumed that all processors must be dealers, yet a dealer need not be a processor. Therefore, total dealer employment is expected to be slightly more than 700 individuals.

This final rule will not change current reporting, recordkeeping and other compliance requirements under the FMP. These requirements include qualification criteria for the commercial permits, landing reporting requirements for vessels with commercial permits, and participation in additional data collection programs if selected by NMFS. All of the information elements required for these requirements are standard elements essential to the successful operation of a fishing business and should, therefore, already be collected and maintained as standard operating practice by the business. The requirements do not require professional skills, and, therefore, are deemed not to be onerous.

The Small Business Administration defines a small business in the commercial fishery sector as a firm that is independently owned and operated, is not dominant in its field of operation, and has annual receipts up to $3.5 million per year. For support industries, the appropriate thresholds are a firm with fewer than 500 employees in the case of fish processors, or fewer than 100 employees in the case of fish dealers. Since none of the reef fish processors meet the SBA employment threshold, it is unlikely that any of the dealers will meet that threshold. Given the profiles presented above, it is determined that all commercial fishing entities and dealers that will be affected by this rule are small business entities. Since all said entities will be potentially affected, it is determined that this rule will affect a substantial number of small entities.

The outcome of ''significant economic impact'' can be ascertained by examining two issues: disproportionality and profitability. The disproportionality question is do the regulations place a substantial number of small entities at a significant competitive disadvantage to large entities? All the commercial fishing, or dealer entities affected by this final rule are considered small entities so the issue of disproportionality does not arise in the present case. The profitability question is do the regulations significantly reduce profit for a substantial number of small entities? This final rule is projected to reduce net revenues by $760,000 to $1.09 million for the bottom longline sector. Compared with projected annual net revenue of $10.7 million for this sector under the status quo ($66,000 per vessel per year for 161 vessels), the projected net revenue reduction equates to approximately $4,700–$6,700, or approximately 7–10 percent, per vessel per year, on average if 2001–2003 costs prevail. If recent cost hikes stimulated by 2005 gas price conditions continue, the projected net revenue reduction is $729,000 to $1.02 million, relative to total annual net revenues of $6.4 million ($39,800 per vessel). This equates to a reduction of approximately $4,500–$6,300, or approximately 11–16 percent, per vessel per year on average.

For the vertical line sector, this final rule is projected to increase net revenues by $81,000–$112,000 per year. Compared with projected annual net revenue of $14.5 million for this sector under the status quo ($19,000 per vessel per year for 748 vessels), the projected increase in net revenue equates to approximately $100–$150 per vessel, or less than a 1-percent increase if 2001–2003 costs prevail. If 2005 cost conditions continue, the vertical line sector is projected to experience a $30,000–$36,000 increase in net revenues per year, or still less than 1 percent per vessel.

The trip limit is expected to reduce the adverse, but unquantifiable, economic effects of derby fishing that are expected to develop under the status quo. Although the direct impacts of derby fishing cannot be quantified using current data and models, they are expected to be substantial and are expected to mitigate any losses in fishery net revenue attributed to the rule.

Five alternatives, including the status quo, were considered relative to the rule. The status quo alternative would eliminate the short-term adverse impacts of the rule, but would not address the potential development of a derby fishery and would not, therefore, achieve the Council's objectives.

The second alternative would establish a step-down trip limit consisting of trip limits of 10,000, 7,500 and 5,500-lb (4,536, 3,402, and 2,495 kg) gutted weight based on target dates and accumulated landing totals. This alternative, while resulting in lower short-term reductions in net revenues than the rule, does not appear to sufficiently constrain commercial landings, as evidenced by 2005 fishery performance and, hence, is not sufficient to lessen derby conditions and reduce the length of the quota closure.

The third alternative would start the commercial trip limit at 7,500-lb (3,402-kg) with step-down to 5,000-lb (2,268-kg). This alternative would potentially reduce the short-term reduction in net revenues of the rule. However, based on preliminary 2005 fishery performance, the starting limit is higher than necessary to counter derby pressure.

The fourth alternative would also start with an initial trip limit of 7,500-lb (3,402-kg) with a step-down to 3,500-lb (1,588-kg). The short-term adverse impacts of this alternative, however, exceed those of the rule.

The fifth alternative would begin the fishery with a 4,000-lb (1,814-kg) trip limit and allow the trip limit to either be increased, decreased, or remain the same depending upon fishery

performance. Although this scenario cannot be fully analyzed due to the absence of a clearly specified variable step decision rule, the initial limit is so low that it is expected to generate excessive negative impacts, particularly on the bottom longline sector.

Copies of the FRFA are available (see **ADDRESSES**).

Section 212 of the Small Business Regulatory Enforcement Fairness Act of 1996 states that, for each rule or group of related rules for which an agency is required to prepare an FRFA, the agency shall publish one or more guides to assist small entities in complying with the rule, and shall designate such publications as ''small entity compliance guides.'' As part of this rulemaking process, NMFS prepared a fishery bulletin, which also serves as a small entity compliance guide. The fishery bulletin will be sent to all vessel permit holders for the Gulf reef fish fishery.

**List of Subjects in 50 CFR Part 622**

Fisheries, Fishing, Puerto Rico, Reporting and recordkeeping requirements, Virgin Islands.

Dated: December 22, 2005.

**James W. Balsiger,**

*Acting Deputy Assistant Administrator for Regulatory Programs, National Marine Fisheries Service.*

■ For the reasons set out in the preamble, 50 CFR part 622 is amended as follows:

## PART 622—FISHERIES OF THE CARIBBEAN, GULF, AND SOUTH ATLANTIC

■ 1. The authority citation for part 622 continues to read as follows:

**Authority:** 16 U.S.C. 1801 *et seq.*

■ 2. In § 622.44, introductory text and paragraph (g) are revised to read as follows (**Note:** This revision to § 622.44(g) supersedes the amendment to § 622.44(g) published in the temporary rule at 70 FR 48323, August 17, 2005):

**§ 622.44 Commercial trip limits.**

Commercial trip limits are limits on the amount of the applicable species that may be possessed on board or landed, purchased, or sold from a vessel per day. A person who fishes in the EEZ may not combine a trip limit specified in this section with any trip or possession limit applicable to state waters. A species subject to a trip limit specified in this section taken in the EEZ may not be transferred at sea, regardless of where such transfer takes place, and such species may not be transferred in the EEZ. For fisheries governed by this part, commercial trip limits apply as follows (all weights are round or eviscerated weights unless specified otherwise):

* * * * *

(g) *Gulf deep-water and shallow-water grouper, combined.* For vessels operating under the quotas in § 622.42(a)(1)(ii) or (a)(1)(iii), the trip limit for Gulf deep-water and shallow-water grouper combined is 6,000 lb (2,722 kg), gutted weight. However, when the quotas in § 622.42(a)(1)(ii) or (a)(1)(iii) are reached and the respective fishery is closed, the commercial trip limit for the species subject to the closure is zero. (See § 622.42(a)(1)(ii) and (a)(1)(iii) for the species included in the deep-water and shallow-water grouper categories, respectively.)

[FR Doc. 05–24603 Filed 12–23–05; 12:48 pm]

BILLING CODE 3510–22–P

## DEPARTMENT OF COMMERCE

### National Oceanic and Atmospheric Administration

### 50 CFR Part 648

**[Docket No. 051104293–5344–02; I.D. 102705B]**

**RIN 0648–AT27**

## Fisheries of the Northeastern United States; Summer Flounder, Scup, and Black Sea Bass Fisheries; 2006 Summer Flounder, Scup, and Black Sea Bass Specifications; Preliminary 2006 Quota Adjustments; 2006 Summer Flounder Quota for Delaware

**AGENCY:** National Marine Fisheries Service (NMFS), National Oceanic and Atmospheric Administration (NOAA), Commerce.

**ACTION:** Final rule.

**SUMMARY:** NMFS issues final specifications for the 2006 summer flounder, scup, and black sea bass fisheries, and makes preliminary adjustments to the 2006 commercial quotas for these fisheries. This final rule specifies allowed harvest limits for both commercial and recreational fisheries, including scup possession limits. This action prohibits federally permitted commercial vessels from landing summer flounder in Delaware in 2006. Regulations governing the summer flounder fishery require publication of this notification to advise the State of Delaware, Federal vessel permit holders, and Federal dealer permit holders that no commercial quota is available for landing summer flounder in Delaware in 2006. This action also defines the total length measurement for black sea bass and makes changes to the regulations regarding the commercial black sea bass pot/trap fishery. The intent of this action is to establish harvest levels and other measures to attain the target fishing mortality (F) or exploitation rates, as specified for these species in the Summer Flounder, Scup, and Black Sea Bass Fishery Management Plan (FMP), to reduce bycatch, and to improve the efficiency of the commercial black sea bass fishery.

**DATES:** The 2006 final specifications are effective from January 1, 2006, through December 31, 2006. The amendment to the definition of ''Total Length'' in § 648.2 is effective January 1, 2006. The amendment to the definition of ''Total Length'' in § 648.2 is effective January 1, 2006. The amendments to the black sea bass gear restrictions at § 648.144(b)(2) are effective January 1, 2007.

**ADDRESSES:** Copies of the specifications document, including the Environmental Assessment (EA), Regulatory Impact Review (RIR), the Initial Regulatory Flexibility Analysis (IRFA), and other supporting documents used by the Summer Flounder, Scup, and Black Sea Bass Monitoring Committees are available from Daniel Furlong, Executive Director, Mid-Atlantic Fishery Management Council, Room 2115, Federal Building, 300 South Street, Dover, DE 19901–6790. The specifications document is also accessible via the Internet at *http://www.nero.noaa.gov.* The Final Regulatory Flexibility Analysis (FRFA) consists of the IRFA, public comments and responses contained in this final rule, and the summary of impacts and alternatives contained in this final rule. Copies of the small entity compliance guide are available from Patricia A. Kurkul, Regional Administrator, Northeast Region, National Marine Fisheries Service, One Blackburn Drive, Gloucester, MA 01930–2298.

**FOR FURTHER INFORMATION CONTACT:** Sarah McLaughlin, Fishery Policy Analyst, (978) 281–9279.

**SUPPLEMENTARY INFORMATION:**

### Background

The summer flounder, scup, and black sea bass fisheries are managed cooperatively by the Atlantic States Marine Fisheries Commission (Commission) and the Mid-Atlantic Fishery Management Council (Council), in consultation with the New England and South Atlantic Fishery Management Councils. The management units specified in the FMP include summer

flounder (*Paralichthys dentatus*) in U.S. waters of the Atlantic Ocean from the southern border of North Carolina (NC) northward to the U.S./Canada border, and scup (*Stenotomus chrysops*) and black sea bass (*Centropristis striata*) in U.S. waters of the Atlantic Ocean from 35°13.3′ N. lat. (the latitude of Cape Hatteras Lighthouse, Buxton, NC) northward to the U.S./Canada border. Implementing regulations for these fisheries are found at 50 CFR part 648, subpart A (general provisions), subpart G (summer flounder), subpart H (scup), and subpart I (black sea bass).

The regulations outline the process for specifying the annual catch limits for the summer flounder, scup, and black sea bass commercial and recreational fisheries, as well as other management measures (e.g., mesh requirements, minimum fish sizes, gear restrictions, possession restrictions, and area restrictions) for these fisheries. The measures are intended to achieve the annual targets set forth for each species in the FMP, specified either as an F or an exploitation rate (the proportion of fish available at the beginning of the year that may be removed by fishing during the year). Once the catch limits are established, they are divided into quotas based on formulas contained in the FMP. Detailed background information regarding the status of the summer flounder, scup, and black sea bass stocks and the development of the 2006 specifications for these fisheries was provided in the proposed specifications (70 FR 69722, November 17, 2005). That information is not repeated here.

NMFS will establish the 2006 recreational management measures for summer flounder, scup, and black sea bass by publishing a proposed and final rule in the **Federal Register** at a later date, following receipt of the Council's recommendations as specified in the FMP.

**Summer Flounder**

The FMP specifies a target F of $F_{max}$, that is, the level of fishing that produces maximum yield per recruit. The best available scientific information indicates that, for 2006, $F_{max}$ for summer flounder is 0.276 (equal to an exploitation rate of about 22 percent from fishing). The Total Allowable Landings (TAL) associated with the target F is allocated 60 percent to the commercial sector and 40 percent to the recreational sector. The commercial quota is allocated to the coastal states based upon percentage shares specified in the FMP. The recreational harvest limit is specified on a coastwide basis. Recreational measures will be the subject of a separate rulemaking early in 2006.

This final rule implements the specifications contained in the November 17, 2005, proposed rule—a summer flounder TAL of 23.59 million lb (10,700 mt) for 2006. The TAL for 2006 is allocated 14,154,000 lb (6,420 mt) to the commercial sector and 9,436,000 lb (4,280 mt) to the recreational sector. This TAL has at least a 50-percent probability of achieving the target F of 0.276 in 2006, if the 2005 TAL and assumed discard levels are not exceeded. Three research projects that would utilize the full summer flounder research set-aside (RSA) of 355,762 lb (161 mt) have been conditionally approved by NMFS and are currently awaiting notice of award. After deducting this RSA, the TAL is divided into a commercial quota of 13,940,543 lb (6,303 mt) and a recreational harvest limit of 9,293,695 lb (4,216 mt). If a project is not approved by the NOAA Grants Office, the research quota associated with the disapproved proposal will be restored to the summer flounder TAL through publication in the **Federal Register**.

Consistent with the revised quota setting procedures for the FMP (67 FR 6877, February 14, 2002), summer flounder overages are determined based upon landings for the period January–October 2005, plus any previously unaccounted for landings from January–December 2004. Table 1 summarizes, for each state, the commercial summer flounder percent share, the 2006 commercial quota (both initial and less the RSA), the 2005 quota overages as described above, and the resulting final adjusted 2006 commercial quota less the RSA.

TABLE 1.—FINAL STATE-BY-STATE COMMERCIAL SUMMER FLOUNDER ALLOCATIONS FOR 2006

| State | Percent share | Initial quota | | Initial quota, less RSA | | 2005 Quota overages (through 10/31/05) [1] | | Adjusted quota, less RSA [2] | |
|---|---|---|---|---|---|---|---|---|---|
| | | lb | kg | lb | kg | lb | kg | lb | kg |
| ME | 0.04756 | 6,732 | 3,053 | 6,630 | 3,007 | 0 | 0 | 6,630 | 3,007 |
| NH | 0.00046 | 65 | 30 | 64 | 29 | 0 | 0 | 64 | 29 |
| MA | 6.82046 | 965,368 | 437,891 | 950,809 | 431,287 | 19,059 | 8,645 | 931,750 | 422,635 |
| RI | 15.68298 | 2,219,769 | 1,006,887 | 2,186,293 | 991,702 | 0 | 0 | 2,186,293 | 991,702 |
| CT | 2.25708 | 319,467 | 144,910 | 314,649 | 142,725 | 0 | 0 | 314,649 | 142,725 |
| NY | 7.64699 | 1,082,355 | 490,956 | 1,066,032 | 483,552 | 130,089 | 59,007 | 935,943 | 424,537 |
| NJ | 16.72499 | 2,367,255 | 1,073,787 | 2,331,554 | 1,057,593 | 0 | 0 | 2,331,554 | 1,057,593 |
| DE | 0.01779 | 2,518 | 1,142 | 2,480 | 1,125 | 49,033 | 22,241 | (46,553) | (21,116) |
| MD | 2.03910 | 288,614 | 130,915 | 284,262 | 128,941 | 0 | 0 | 284,262 | 128,941 |
| VA | 21.31676 | 3,017,174 | 1,368,590 | 2,971,672 | 1,347,950 | 0 | 0 | 2,971,672 | 1,347,950 |
| NC | 27.44584 | 3,884,684 | 1,762,093 | 3,826,099 | 1,735,519 | 0 | 0 | 3,826,099 | 1,735,519 |
| Total [3] | 100.00 | 14,154,000 | 6,420,254 | 13,940,543 | 6,323,430 | 198,181 | 89,893 | 13,788,916 | 6,254,547 |

[1] 2005 quota overage is determined through comparison of landings for January through October 2005, plus any landings in 2004 in excess of the 2004 quota (that were not previously addressed in the 2005 specifications), with the final 2005 quota for each state (70 FR 303, January 4, 2005). For Delaware, includes continued repayment of overharvest from 2004.

[2] Parentheses indicate a negative number.

[3] Total quota is the sum of all states having allocation. A state with a negative number has an allocation of zero (0). Kilograms are as converted from pounds and may not necessarily add due to rounding.

The Commission has established a system whereby 15 percent of each state's quota may be voluntarily set aside each year to enable vessels to land an incidental catch allowance after the directed fishery in a state has been closed. The intent of the incidental catch set-aside is to reduce discards by allowing fishermen to land summer flounder caught incidentally in other fisheries during the year, while ensuring that the state's overall quota is not exceeded. These Commission set-asides are not included in these 2006 final summer flounder specifications because NMFS does not have authority to establish such subcategories.

**Delaware Summer Flounder Closure**

Table 1 (above) indicates that, for Delaware, the amount of the 2005

summer flounder quota overage (inclusive of overharvest from 2004) is greater than the amount of commercial quota allocated to Delaware for 2006. As a result, there is no quota available for 2006 in Delaware. The regulations at § 648.4(b) provide that Federal permit holders, as a condition of their permit, must not land summer flounder in any state that the Regional Administrator has determined no longer has commercial quota available for harvest. Therefore, effective January 1, 2006, landings of summer flounder in Delaware by vessels holding commercial Federal summer flounder fisheries permits are prohibited for the 2006 calendar year, unless additional quota becomes available through a quota transfer and is announced in the **Federal Register**. Federally permitted dealers are advised that they may not purchase summer flounder from federally permitted vessels that land in Delaware for the 2006 calendar year, unless additional quota becomes available through a transfer, as mentioned above.

## Scup

The target exploitation rate for scup for 2006 is 21 percent. The FMP specifies that the Total Allowable Catch (TAC) associated with a given exploitation rate be allocated 78 percent to the commercial sector and 22 percent to the recreational sector. Scup discard estimates are deducted from both sectors' TACs to establish TALs for each sector, i.e., TAC minus discards equals TAL. The commercial TAC, discards, and TAL (commercial quota) are then allocated on a percentage basis to three quota periods, as specified in the FMP: Winter I (January–April)—45.11 percent; Summer (May–October)—38.95 percent; and Winter II (November–December)—15.94 percent. The recreational harvest limit is allocated on a coastwide basis. Recreational measures will be the subject of a separate rulemaking early in 2006.

This final rule implements the specifications contained in the November 17, 2005, proposed rule, i.e., a 19.79–million–lb (8,977–mt) scup TAC and a 16.27-million-lb (7,380–mt) scup TAL. After deducting 184,690 (84 mt) of RSA for the three approved research projects, the TAL is divided into a commercial quota of 11,932,142 lb (5,412 mt) and a recreational harvest limit of 4,153,168 lb (1,884 mt). If a project is not approved by the NOAA Grants Office, the research quota associated with the disapproved proposal will be restored to the scup TAL through publication in the **Federal Register**.

Consistent with the revised quota setting procedures established for the FMP (67 FR 6877, February 14, 2002), scup overages are determined based upon landings for the Winter I and Summer 2005 periods, plus any previously unaccounted for landings from January–December 2004. Table 2 presents the final 2005 commercial scup quota for each period and the reported 2005 landings for the 2005 Winter I and Summer periods; there was no overage of the Winter I or Summer quota. On August 2, 2005 (70 FR 44291), and as corrected on October 4, 2005 (70 FR 57802), NMFS announced a transfer of quota from Winter I to Winter II 2005. Per the quota counting procedures, after June 30, 2006, NMFS will compile all available landings data for Winter II 2005 and compare the landings to the Winter II 2005 allocation, as adjusted. Any overages will be determined and required deductions will be made to the Winter II 2006 allocation.

TABLE 2.—SCUP PRELIMINARY 2005 COMMERCIAL LANDINGS BY QUOTA PERIOD

| Quota period | 2005 quota | | Reported 2005 landings through 10/31/05 | | Preliminary overages as of 10/31/05 | |
|---|---|---|---|---|---|---|
| | lb | kg | lb | kg | lb | kg |
| Winter I | 5,518,367 | 2,503,089 | 3,709,863 | 1,682,766 | 0 | 0 |
| Summer | 4,764,806 | 2,161,280 | 4,062,810 | 1,842,860 | 0 | 0 |
| Winter II | 1,949,962 | 884,488 | N/A | N/A | N/A | N/A |
| Total | 12,233,135 | 5,548,857 | 7,772,673 | 3,525,626 | N/A | N/A |

N/A= Not applicable.

Table 3 presents the commercial scup percent share, 2006 TAC, projected discards, 2006 initial quota (with and without the RSA deduction), and initial possession limits, by quota period. To achieve the commercial quotas, this final rule implements a Winter I period (January–April) per-trip possession limit of 30,000 lb (13.6 mt), and a Winter II period (November–December) initial per-trip possession limit of 2,000 lb (907 kg). The Winter I per-trip possession limit will be reduced to 1,000 lb (454 kg) when 80 percent of the commercial quota allocated to that period is projected to be harvested.

TABLE 3.—INITIAL COMMERCIAL SCUP QUOTA ALLOCATIONS FOR 2006 BY QUOTA PERIOD

| Quota period | Percent share | Total allowable catch | | Discards | | Initial quota | | Initial quota less RSA | | Possession limits (per trip) [1] | |
|---|---|---|---|---|---|---|---|---|---|---|---|
| | | lb | mt | lb | mt | lb | mt | lb | mt | lb | kg |
| Winter I | 45.11 | 6,963,270 | 3,159 | 1,515,696 | 688 | 5,447,574 | 2,471 | 5,382,589 | 2,442 | 30,000 | 13,608 |
| Summer | 38.95 | 6,012,400 | 2,727 | 1,308,720 | 594 | 4,703,680 | 2,134 | 4,647,569 | 2,108 | N/A | N/A |
| Winter II | 15.94 | 2,460,530 | 1,116 | 535,584 | 243 | 1,924,946 | 873 | 1,901,983 | 863 | 2,000 | 907 |
| Total [2] | 100.00 | 15,436,200 | 7,002 | 3,360,000 | 1,524 | 12,076,200 | 5,478 | 11,932,142 | 5,412 | N/A | N/A |

[1] The Winter I possession limit will drop to 1,000 lb (454 kg) upon attainment of 80 percent of that period's allocation. The Winter II possession limit may be adjusted (in association with a transfer of unused Winter I quota to the Winter II period) via notification in the **Federal Register**.

[2] Metric tons and kilograms are as converted from pounds and may not necessarily add due to rounding.

N/A = Not applicable.

As described in the November 17, 2005, proposed rule, the Council and the Commission's Summer Flounder, Scup, and Black Sea Bass Management Board (Board) recommended an increase in the Winter II possession limit-to-rollover amount ratios, i.e., an increase from 500 lb (227 kg) to 1,500 lb (680 kg) per 500,000 lb (227 mt) of unused Winter I period quota transferred to the Winter II period. NMFS is implementing this recommendation, as presented in Table 4, because it would increase the likelihood of achieving the Scup Winter II quota.

TABLE 4.—POTENTIAL INCREASE IN WINTER II POSSESSION LIMITS BASED ON THE AMOUNT OF SCUP ROLLED OVER FROM WINTER I TO WINTER II PERIOD

| Initial Winter II possession limit | | Rollover from Winter I to Winter II | | Increase in initial Winter II possession limit | | Final Winter II possession limit after rollover from Winter I to Winter II | |
|---|---|---|---|---|---|---|---|
| lb | kg | lb | mt | lb | kg | lb | kg |
| 2,000 | 907 | 0–499,999 | 0–227 | 0 | 0 | 2,000 | 907 |
| 2,000 | 907 | 500,000–999,999 | 227–454 | 1,500 | 680 | 3,500 | 1,588 |
| 2,000 | 907 | 1,000,000–1,499,999 | 454–680 | 3,000 | 1,361 | 5,000 | 2,268 |
| 2,000 | 907 | 1,500,000–1,999,999 | 680–907 | 4,500 | 2,041 | 6,500 | 2,948 |
| 2,000 | 907 | 2,000,000–2,500,000 | 907–1,134 | 6,000 | 2,722 | 8,000 | 3,629 |

**Black Sea Bass**

For 2006, the target exploitation rate for black sea bass is 25 percent. The FMP specifies that the TAL associated with a given exploitation rate be allocated 49 percent to the commercial sector and 51 percent to the recreational sector. The recreational harvest limit is allocated on a coastwide basis. Recreational measures will be the subject of a separate rulemaking early in 2006.

This final rule implements the specifications contained in the November 17, 2005, proposed rule, i.e., an 8-million-lb (3,629-mt) black sea bass TAL. After deducting 178,956 lb (81 mt) of RSA for the four approved research projects, the TAL is divided into a commercial quota of 3,832,312 lb (1,738 mt) and a recreational harvest limit of 3,988,732 lb (1,809 mt). If a project is not approved by the NOAA Grants Office, the research quota associated with the disapproved proposal will be restored to the black sea bass TAL through publication in the **Federal Register**. Consistent with the revised quota setting procedures for the FMP, black sea bass overages are determined based upon landings for the period January-September 2005, plus any previously unaccounted for landings from January-December 2004. No adjustment to the 2006 commercial quota is necessary.

**Other Black Sea Bass Management Measures**

This final rule makes two changes to the regulations regarding the commercial black sea bass pot/trap fishery. First, NMFS increases the number of required vents in the parlor portion of the pot or trap from one to two. Black sea bass traps constructed of wooden laths may have, instead, escape vents constructed by leaving spaces of at least 1.375 inches (3.49 cm) between two sets of laths in the parlor portion of the trap. Second, NMFS increases the minimum circle vent size for pots and traps from 2.375 inches (6.03 cm) to 2.5 inches (6.4 cm) in diameter. The purpose of these modifications is to allow for greater escapement of sublegal fish and other non-target species from black sea bass pots and traps. To allow fishery participants time to comply with the changes to the black sea bass pot and trap gear restrictions, the effective date of this change in regulations is January 1, 2007.

In addition, NMFS clarifies that, for black sea bass, total length measurement should not include the caudal fin tendril. NMFS amends the total length definition to exclude explicitly any caudal filament in the measurement of black sea bass.

**Comments and Responses**

NMFS received 58 written comments during the comment period for the November 17, 2005, proposed rule. Significant issues and concerns are summarized below and responded to as follows.

*Comment 1:* Several recreational fishery participants wrote in opposition of the proposed summer flounder TAL. Most of the commenters expressed concern about the potential effect of a TAL reduction on the recreational industry. These comments focused on the NJ recreational summer flounder fishery in particular. One commenter indicated that the commercial sector will maintain a portion of profits through higher fish prices, while the recreational sector and shore communities will be disproportionately affected. Some commenters stated that the commercial/recreational summer flounder TAL allocation scheme is unfair and contrary to historical landings. Several commenters were concerned about commercial bycatch and opposed the 14-inch (35.6 cm) commercial minimum fish size for summer flounder.

*Response:* As of the December 7, 2005, Council meeting, projected recreational landings for 2005 indicate that, coastwide, summer flounder recreational landings must be reduced by 3.6 percent to achieve the 2006 recreational harvest limit. However, under conservation equivalency, which was recommended by the Council and Board, if approved by NMFS for the 2006 fishing year, MA, CT, and NY would be required to reduce summer flounder landings (in number of fish) in 2006 by 15 percent, 34 percent, and 30 percent, respectively. See Response 2 for more information regarding conservation equivalency. The Council plans to address summer flounder TAL allocation and bycatch issues, among others, in Amendment 15 to the FMP, and plans to begin public scoping on these issues in the spring of 2006.

*Comment 2:* Several commenters expressed concern about summer flounder recreational management measures, particularly for NJ.

*Response:* In the last several years, the Council and Board have recommended, and NMFS has approved, conservation equivalency for summer flounder, allowing each state to determine and implement the possession limit, minimum fish size, and fishing season appropriate to achieve the necessary state landings reduction. NMFS may waive Federal requirements regarding recreational management measures for federally permitted vessels landing summer flounder in a state with an approved conservation equivalency program; those vessels then are subject to the management measures in the state

in which they land. It is important to note that, in many cases, the relaxation of a minimum size would require a stricter possession limit or shorter fishing season.

As described above, the best available information indicates that no reduction in landings from the 2005 level will be necessary for NJ to achieve its landing target. Therefore, NMFS does not anticipate that NJ would implement more restrictive recreational management measures than those implemented for 2005. The recreational management measures for 2006 will be addressed in a separate rulemaking in early 2006, following receipt and review of the Council's recommendations.

*Comment 3:* Several commenters stated that the proposed summer flounder TAL reduction is unreasonable and unnecessary, that the stock assessment information is not strong enough to make such a decision, and that the status quo TAL (or the 33-million-lb (14,969-mt) TAL previously specified for 2006) should be maintained. Some supported the Council-recommended TAL of 26-million-lb (11,793 mt) for 2006–2008. Many of the commenters stated that they believe that the stock is healthy and noted the abundance of sublegal summer flounder (for NJ, less than 16.5 inches (41.9 cm)) as evidence. Some commenters cautioned that more restrictive recreational management measures may result in civil disobedience, especially regarding the minimum fish size.

*Response:* At the 41st Northeast Regional Stock Assessment Workshop, the Stock Assessment Review Committee (SARC) found that the 2005 stock assessment provided sound scientific advice for management. The SARC indicated that the overfishing of the summer flounder stock is occurring relative to the biological reference points established in Amendment 12 to the FMP, and as updated by the Northeast Fisheries Science Center's Southern Demersal Species Working Group. Under the Magnuson-Stevens Fishery Conservation and Management Act (Magnuson-Stevens Act), NMFS is required to prevent overfishing. Further, a 2000 Federal Court Order requires that NMFS set a TAL that has at least a 50-percent probability of achieving the F target. Because the F target is set for a calendar year, NMFS maintains that setting a TAL greater than 23.59-million-lb ((10,700 mt) would be contrary to the objectives of the FMP and the Federal Court Order.

*Comment 4:* Attorneys for two recreational fishing associations (NY and NJ) suggested that the 2000 Federal Court Order is not controlling under the present set of facts and circumstances, i.e., it does not require NMFS to set the summer flounder TAL at 23.59-million-lb (10,700 mt), and urged NMFS to follow the Council's recommendation for a 26-million-lb (11,793-mt) summer flounder TAL for 2006–2008 in order to rebuild to the biomass target by 2010, while reducing major social and economic costs of cutting the TAL from 33-million-lb (14,969 mt) to 23.59-million-lb (10,700 mt). One of the commenters expressed concern about NMFS basing its TAL decision on the stock assessment, and NMFS not taking into greater consideration the potential economic impacts on fishing communities. The commenter contends that the stock assessment is based partially on unreliable Marine Recreational Fishery Statistics Survey and trawl survey data. One recreational fishery participant made similar comments regarding the Court decision.

*Response:* F targets are set on an annual basis and are based on the F that would result in the maximum yield per recruit ($F_{max}$). Analysis indicates that a constant TAL of 26-million-lb (11,793 mt) for 2006 through 2008 has only a 25–30 percent probability of achieving the 2006 F target. After careful consideration of the 2000 Federal Court Order in *Natural Resources Defense Council, Inc., et al.*, v. *Daley*, NMFS finds that it is necessary to set a summer flounder TAL that has at least a 50-percent probability of achieving the 2006 F target, for the 2006 fishing year. In that case, the Court held that ''at the very least this means that ''to assure'' the achievement of the target F, to ''prevent overfishing'' and to ''be consistent with'' the fishery management plan, the TAL must have had at least a 50-percent chance of attaining an F of 0.24'', which was the $F_{max}$ value at the time. Although Framework Adjustment 5 to the FMP allows for the setting of multi-year TALs, the framework did not contemplate setting TALs that are projected not to achieve the F target in each year. NMFS finds that implementing multi-year TALs that would not achieve the F target in any year fails to meet the probability standard contemplated in the Federal Court Order.

*Comment 5:* One commenter, representing a commercial seafood association, wrote in support of the proposed scup and black sea bass TALs, the RSA amounts, and commercial scup measures, and of a 26-million-lb (11,793-mt) summer flounder TAL for 2006–2008.

*Response:* This final rule implements the scup and black sea bass specifications and management measures as proposed. An explanation regarding NMFS'' decision to implement the 23.59-million-lb (10,700-mt) TAL is provided above.

*Comment 6:* Representatives of three environmental organizations submitted a joint letter expressing concern about NMFS'' reliance on a 50-percent probability standard in setting a TAL, given that F has historically been underestimated. The commenters noted that, in prior years, a 75-percent probability has been used. They also asked that the final rule elucidate how the 23.59-million-lb (10,700-mt) TAL is consistent with the rebuilding requirements of the Magnuson-Stevens Act. Lastly, the commenters asked that NMFS be prepared to consider alternative management approaches in the event that the Board approves a 26-million-lb (11,793-mt) TAL.

*Response:* Although NMFS did set TALs for 2005 and, preliminarily, for 2006, that were estimated to have a 75-percent probability of achieving the 2005 F target of 0.26, setting a TAL that is projected to have less than a 75-percent probability of achieving the target F is consistent with the 2000 Federal Court Order. The target F is derived according to the provisions in the FMP and is based on $F_{max}$, the proxy for the threshold F that would produce the maximum sustainable yield ($F_{msy}$). The stock assessment completed in 2005 concluded that the summer flounder stock continues to rebuild, albeit at a slower rate than previously projected. The 2006 TAL of 23.59-million-lb (10,700 mt) represents a 22-percent decrease from the 2005 TAL of 30.3-million-lb (13,744 mt), and is intended to ensure that the stock continues to rebuild. This level of TAL will reduce removals and allow for greater growth of the biomass. This approach will allow for TAL specification that is expected to achieve the B target of 204-million-lb (92,532 mt) by the end of 2009.

On December 6, 2005, the Board approved a 2006 TAL of 23.59-million-lb (10,700 mt). Therefore, it is not necessary for NMFS to consider alternative measures to constrain the states to their commercial quotas.

*Comment 7:* Another commenter requested more restrictive measures (increased minimum fish sizes, lower TALs) for all three species.

*Response:* NMFS did not consider minimum fish sizes as part of this rulemaking. NMFS has reviewed the best available scientific information and the recommendations of the Council and selected management measures

designed to achieve the target F or exploitation rate for each fishery while minimizing the impact on fishery participants.

NMFS received several comments on issues not specifically related to this rulemaking, including: Some supporting more lenient minimum fish sizes for summer flounder recreational fishermen; some concerned about the impacts of release mortality on the summer flounder stock; a few expressing concern about composition of the Council; one suggesting that NMFS place observers on party boats rather than using random recreational surveys; one suggesting that no summer flounder size limits be implemented but that anglers be required to keep all fish up to the possession limit amount; one suggesting split minimum fish sizes for summer flounder; one suggesting required use of circle hooks for recreational summer flounder fishing; and one supporting designation of marine protected areas to allow the stocks to rebuild. While NMFS acknowledges that consideration of these concerns is important, this rule is not the proper mechanism to address these issues.

**Classification**

The Assistant Administrator for Fisheries, NOAA, finds good cause under 5 U.S.C. 553(d)(3) to waive the 30-day delayed effectiveness period for this rule. This action establishes annual quotas for the summer flounder, scup, and black sea bass fisheries and possession limits for the commercial scup fishery. Preparation of the proposed rule was dependent on the submission by the Council of the final EA/RIR/IRFA, which occurred in October 2005, in order for the agency to provide the public with information from the environmental and economic analyses, as required in rulemaking. The Council provided a supplement to the document in November 2005. NMFS published the proposed rule on November 17, 2005, with an abbreviated, 15-day comment period, in order to allow for finalization of the proposed regulatory changes by January 1, 2006. NMFS was unable to obtain the necessary data from the Council before October 2005 to finalize the specifications. Therefore, in order to implement the 2006 specifications before the beginning of the fishing season beginning January 1, 2006, NMFS must waive the 30-day delay in effectiveness.

If implementation of the specifications is delayed, NMFS will be prevented from carrying out its legal obligation to prevent overfishing of these three species. The fisheries covered by this action will begin making landings on January 1, 2006. If a delay in effectiveness were to be required, and a quota were to be harvested during a delayed effectiveness period, the lack of effective quota specifications would prevent NMFS from closing the fishery. The scup and black sea bass fisheries are expected to be active at the start of the fishing season in 2006. In addition, this rule is necessary to keep summer flounder from being landed in Delaware, which is in a negative quota situation.

This final rule has been determined to be not significant for purposes of Executive Order 12866.

Included in this final rule is the FRFA prepared pursuant to 5 U.S.C. 604(a). The FRFA incorporates the IRFA, a summary of the significant issues raised by the public comments in response to the IRFA, and NMFS' responses to those comments, and a summary of the analyses completed to support the action. A copy of the EA/RIR/IRFA is available from the Council (see **ADDRESSES**).

The preamble to the proposed rule included a detailed summary of the analyses contained in the IRFA, and that discussion is not repeated here.

**Final Regulatory Flexibility Analysis**

*Statement of Objective and Need*

A description of the reasons why this action is being taken, and the objectives of and legal basis for this final rule are explained in the preambles to the proposed rule and this final rule and are not repeated here.

*Summary of Significant Issues Raised in Public Comments*

Several of the comment letters received on the proposed rule specifically addressed the potential economic impact of reduction of the summer flounder TAL on the recreational fishing industry, particularly in NJ. No changes to the proposed rule were required to be made as a result of public comments. For a summary of the comments received, and the responses thereto, refer to the ''Comments and Responses'' section of this preamble.

*Description and Estimate of Number of Small Entities to Which the Rule Will Apply*

The categories of small entities likely to be affected by this action include commercial and charter/party vessel owners holding an active Federal permit for summer flounder, scup, or black sea bass, as well as owners of vessels that fish for any of these species in state waters. The Council estimates that the 2006 quotas could affect 2,162 vessels that held a Federal summer flounder, scup, and/or black sea bass permit in 2004. However, the more immediate impact of this final rule will likely be felt by the 906 vessels that actively participated (i.e., landed these species) in these fisheries in 2004.

*Description of Projected Reporting, Recordkeeping, and Other Compliance Requirements*

No additional reporting, recordkeeping, or other compliance requirements are included in this final rule.

*Description of the Steps Taken To Minimize Economic Impact on Small Entities*

Economic impacts are being minimized to the extent practicable with the quota specifications being implemented in this final rule, while remaining consistent with the target fishing mortality rates or target exploitation rates specified in the FMP. Specification of commercial quotas and possession limits is constrained by the conservation objectives of the FMP, and implemented at 50 CFR part 648 under the authority of the Magnuson-Stevens Act.

The economic analysis assessed the impacts of the various management alternatives. In the EA, the no action alternative is defined as follows: (1) No proposed specifications for the 2006 summer flounder, scup, and black sea bass fisheries would be published; (2) the indefinite management measures (minimum mesh sizes, minimum fish sizes, possession limits, permit and reporting requirements, etc.) would remain unchanged; (3) there would be no quota set-aside allocated to research in 2006; (4) the existing black sea bass pot and trap gear restrictions would remain in place; and (5) there would be no specific cap on the allowable annual landings in these fisheries (i.e., there would be no quotas). Implementation of the no action alternative would be inconsistent with the goals and objectives of the FMP, its implementing regulations, and the Magnuson-Stevens Act. In addition, the no action alternative would substantially complicate the approved management program for these fisheries, and would very likely result in overfishing of the resources. Therefore, the no action alternative is not considered to be a reasonable alternative to the preferred action and is not analyzed in the EA/RIR/IRFA/FRFA.

Alternative 1 consists of the harvest limits proposed by the Council for

summer flounder, and the Council and Board for scup and black sea bass. Alternative 2 consists of the most restrictive quotas (i.e., lowest landings) considered by the Council and the Board for all of the species. Alternative 3 consists of the status quo quotas, which were the least restrictive quotas (i.e., highest landings) considered by the Council and Board for all three species. Although Alternative 3 would result in higher landings for 2006, it would also likely exceed the biological targets specified in the FMP.

Table 5 presents the 2006 initial TALs, RSA, commercial quotas adjusted for RSA, and preliminary recreational harvests for the fisheries under these three quota alternatives.

TABLE 5.—COMPARISON, IN LB (MT), OF THE ALTERNATIVES OF QUOTA COMBINATIONS REVIEWED

| | Initial TAL | RSA | 2005 commercial quota overage | Preliminary adjusted commercial quota | Preliminary recreational harvest limit |
|---|---|---|---|---|---|
| **Quota Alternative 1 (Preferred)** | | | | | |
| Summer Flounder | 26.0 million (11,793) | 355,762 (161) | 191,181 (87) | 15.2 million (6,893) | 10.26 million. (4,653) |
| Scup | 16.27 million (7,380) | 184,690 (84) | 0.000 | 11.93 million (5,412) | 4.15 million. (1,884) |
| Black Sea Bass | 8.0 million (3,629) | 178,956 (81) | 0.00 | 3.83 million (1,738) | 3.99 million. (1,809) |
| **Quota Alternative 2 (Most Restrictive)** | | | | | |
| Summer Flounder | 23.59 million (10,700) | 355,762 (161) | 191,181 (87) | 13.75 million (6,237) | 9.29 million. (4,217) |
| Scup | 10.77 million (4,885) | 184,690 (84) | 0.00 | 7.65 million (3,468) | 2.94 million. (1,333) |
| Black Sea Bass | 7.5 million (3,402) | 178,956 (81) | 0.00 | 3.59 million (1,627) | 3.73 million. (1,694) |
| **Quota Alternative 3 (Status Quo—Least Restrictive)** | | | | | |
| Summer Flounder | 30.3 million (13,744) | 355,762 (161) | 191,181 (87) | 17.78 million (8,063) | 11.98 million. (5,433) |
| Scup | 16.5 million (7,484) | 184,690 (84) | 0.00 | 12.12 million (5,496) | 4.2 million. (1,905) |
| Black Sea Bass | 8.2 million (3,719) | 178,956 (81) | 0.00 | 3.93 million (1,782) | 4.09 million. (1,856) |

For clarity, note that this final rule implements quotas contained in Alternative 1 for scup and black sea bass (the Council and Board's preferred alternatives for these fisheries) and in Alternative 2 for summer flounder. Relative to 2005, the 2006 commercial quotas and recreational harvest limits contained in this action would result in a 22-percent decrease for each sector, respectively, a 2-percent decrease and 5-percent increase in scup landings for the commercial and recreational sectors, respectively, and a 3-percent decrease in black sea bass landings for both sectors; percentage changes associated with each alternative are discussed in the proposed rule. The measures contained in this action were chosen because they provide for the maximum level of landings that still achieve the fishing mortality and exploitation targets specified in the FMP.

The commercial scup possession limits and the amount of increase to the Winter II possession limit-to-rollover amount ratio were chosen as an appropriate balance between the economic concerns of the industry (i.e., landing enough scup to make the trip economically viable) and the need to ensure the equitable distribution of the quota over each period. Further, these actions are intended to help convert scup discards to landings, thereby improving the efficiency of the commercial scup fishery, and increasing the likelihood of achieving the Winter II quota.

The decision to require a second vent in the parlor portion of black sea bass traps and to increase the minimum size for circular vents to 2.5 inches (6.4 cm) in diameter was made based on recommendations from a 2005 black sea bass commercial industry workshop and is expected to reduce the mortality of sublegal fish, thereby improving the efficiency of the commercial black sea bass fishery (via increasing yields and amount of mature fish in the stock).

Finally, the revenue decreases associated with the RSA program are expected to be minimal, and are expected to yield important long-term benefits associated with improved fisheries data. It should also be noted that fish harvested under the RSAs would be sold, and the profits would be used to offset the costs of research. As such, total gross revenue to the industry would not decrease substantially if the RSAs are utilized.

*Small Entity Compliance Guide*

Section 212 of the Small Business Regulatory Enforcement Fairness Act of 1996 states that, for each rule or group of related rules for which an agency is required to prepare a FRFA, the agency shall publish one or more guides to assist small entities in complying with the rule, and shall designate such publications as ''small entity compliance guides.'' The agency shall explain the actions a small entity is required to take to comply with a rule or group of rules. As part of this rulemaking process, a small entity compliance guide will be sent to all holders of Federal permits issued for the summer flounder, scup, and black sea bass fisheries. In addition, copies of this final rule and guide (i.e., permit holder letter) are available from NMFS (see **ADDRESSES**) and at the following Web site: *http://www.nero.noaa.gov*.

**List of Subjects in 50 CFR Part 648**

Fisheries, Fishing, Reporting and recordkeeping requirements.

Dated: December 22, 2005.

**James W. Balsiger,**

*Acting Deputy Assistant Administrator for Regulatory Programs, National Marine Fisheries Service.*

■ For the reasons stated in the preamble, 50 CFR part 648 is amended as follows:

## PART 648—FISHERIES OF THE NORTHEASTERN UNITED STATES

■ 1. The authority citation for part 648 continues to read as follows:

**Authority:** 16 U.S.C. 1801 *et seq.*

■ 2. In § 648.2, add a second sentence to the definition of ''Total Length'' to read as follows:

**§ 648.2 Definitions.**

* * * * *

*Total Length (TL)* * * * For black sea bass, *Total Length (TL)* means the straight-line distance from the tip of the snout to the end of the tail (caudal fin), excluding any caudal filament, while the fish is lying on its side.

* * * * *

■ 3. In § 648.144, revise paragraph (b)(2) to read as follows:

**§ 648.144 Gear restrictions.**

* * * * *

(b) * * *

(2) All black sea bass traps or pots must have two escape vents placed in lower corners of the parlor portion of the pot or trap that each comply with one of the following minimum size requirements: 1.375 inches by 5.75 inches (3.49 cm by 14.61 cm); a circular vent of 2.5 inches (6.4 cm) in diameter; or a square vent with sides of 2 inches (5.1 cm), inside measure; however, black sea bass traps constructed of wooden laths may have instead escape vents constructed by leaving spaces of at least 1.375 inches (3.49 cm) between two sets of laths in the parlor portion of the trap. These dimensions for escape vents and lath spacing may be adjusted pursuant to the procedures in § 648.140.

* * * * *

[FR Doc. 05–24583 Filed 12–23–05; 11:56 am]

BILLING CODE 3510–22–P

## DEPARTMENT OF COMMERCE

## National Oceanic and Atmospheric Administration

## 50 CFR Part 679

**[Docket No. 041126332–5039–02; I.D. 122305A]**

## Fisheries of the Exclusive Economic Zone Off Alaska; Groundfish in the Bering Sea and Aleutian Islands Management Area

**AGENCY:** National Marine Fisheries Service (NMFS), National Oceanic and Atmospheric Administration (NOAA), Commerce.

**ACTION:** Temporary rule; apportionment of reserves; request for comments.

**SUMMARY:** NMFS apportions amounts of the non-specified reserve of groundfish to certain target species in the Bering Sea and Aleutian Islands management area (BSAI). This action is necessary to account for previous harvest of the total allowable catch (TAC). It is intended to promote the goals and objectives of the fishery management plan for groundfish of the BSAI.

**DATES:** Effective December 29, 2005, through 2400 hrs, Alaska local time, December 31, 2005. Comments must be received no later than 1630, Alaska local time, January 12, 2006.

**ADDRESSES:** Send comments to Sue Salveson, Assistant Regional Administrator, Sustainable Fisheries Division, Alaska Region, NMFS, Attn: Lori Durall. Comments may be submitted by:

- Mail to: P.O. Box 21668, Juneau, AK 99802;
- Hand delivery to the Federal Building, 709 West 9th Street, Room 420A, Juneau, Alaska;
- FAX to 907–586–7557;
- E-mail to *bsairel05b@noaa.gov* and include in the subject line of the e-mail comment the document identifier: bsairel05b; or
- Webform at the Federal eRulemaking Portal: *www.regulations.gov*. Follow the instructions at that site for submitting comments.

**FOR FURTHER INFORMATION CONTACT:** Josh Keaton, 907–586–7228.

**SUPPLEMENTARY INFORMATION:** NMFS manages the groundfish fishery in the BSAI exclusive economic zone according to the Fishery Management Plan for Groundfish of the Bering Sea and Aleutian Islands Management Area (FMP) prepared by the North Pacific Fishery Management Council under authority of the Magnuson-Stevens Fishery Conservation and Management Act. Regulations governing fishing by U.S. vessels in accordance with the FMP appear at subpart H of 50 CFR part 600 and 50 CFR part 679.

The Administrator, Alaska Region, NMFS, has determined that the 2005 initial TACs established in the 2005 and 2006 final harvest specifications for groundfish in the BSAI (70 FR 8979, February 24, 2005) for arrowtooth flounder, yellowfin sole, ''other flatfish'', squid and rock sole in the BSAI need to be supplemented from the non-specified reserve in order to account for prior harvest.

Therefore, in accordance with § 679.20(b)(3), NMFS apportions amounts from the non-specified reserve to the TACs for the following species or species groups in the BSAI: 429 mt to arrowtooth flounder, 401 mt to yellowfin sole, 193 mt to ''other flatfish'', 100 mt to squid and 227 to rock sole. This apportionment is consistent with § 679.20(b)(1)(ii) and does not result in overfishing of a target species because the revised initial TAC is equal to or less than the specification of the acceptable biological catch (70 FR 8979, February 24, 2005).

**Classification**

This action responds to the best available information recently obtained from the fishery. The Assistant Administrator for Fisheries, NOAA, (AA) finds good cause to waive the requirement to provide prior notice and opportunity for public comment pursuant to the authority set forth at 5 U.S.C. 553(b)(B) and § 679.20(b)(3)(iii)(A) as such a requirement is impracticable and contrary to the public interest. This requirement is impracticable and contrary to the public interest as it would prevent NMFS from responding to the most recent fisheries data in a timely fashion and would delay the apportionment of the non-specified reserves of groundfish. NMFS was unable to publish a notice providing time for public comment because the most recent, relevant data only became available as of December 22, 2005.

The AA also finds good cause to waive the 30-day delay in the effective date of this action under 5 U.S.C. 553(d)(3). This finding is based upon the reasons provided above for waiver of prior notice and opportunity for public comment.

Under § 679.20(b)(3)(iii), interested persons are invited to submit written comments on this action (see **ADDRESSES**) until January 12, 2006.

This action is required by 50 CFR 679.20 and is exempt from review under Executive Order 12866.

**Authority:** 16 U.S.C. 1801, *et seq.*

Dated: December 23, 2005.

**Alan D. Risenhoover,**

*Acting Director, Office of Sustainable Fisheries, National Marine Fisheries Service.*

[FR Doc. 05–24607 Filed 12–28–05; 8:45 am]

BILLING CODE 3510–22–S

# Proposed Rules

Federal Register
Vol. 70, No. 249
Thursday, December 29, 2005

This section of the FEDERAL REGISTER contains notices to the public of the proposed issuance of rules and regulations. The purpose of these notices is to give interested persons an opportunity to participate in the rule making prior to the adoption of the final rules.

## DEPARTMENT OF AGRICULTURE

### Animal and Plant Health Inspection Service

### 7 CFR Part 319

**[Docket No. 05–068–1]**

### Importation of Peppers From the Republic of Korea

**AGENCY:** Animal and Plant Health Inspection Service, USDA.

**ACTION:** Proposed rule.

**SUMMARY:** We are proposing to amend the fruits and vegetables regulations to allow the importation into the continental United States of peppers from the Republic of Korea under certain conditions. As a condition of entry, the peppers would have to be grown in approved insect-proof, pest-free greenhouses and packed in pest-exclusionary packinghouses. In addition, the peppers would have to be safeguarded against pest infestation during their movement from the production site to the packinghouse and from the packinghouse to the continental United States. This action would allow for the importation of peppers from the Republic of Korea into the continental United States while continuing to provide protection against the introduction of quarantine pests.

**DATES:** We will consider all comments that we receive on or before February 27, 2006.

**ADDRESSES:** You may submit comments by either of the following methods:

- Federal eRulemaking Portal: Go to *http://www.regulations.gov* and, in the ''Search for Open Regulations'' box, select ''Animal and Plant Health Inspection Service'' from the agency drop-down menu, then click on ''Submit.'' In the Docket ID column, select APHIS–2005–0112 to submit or view public comments and to view supporting and related materials available electronically. After the close of the comment period, the docket can be viewed using the ''Advanced Search'' function in Regulations.gov.
- Postal Mail/Commercial Delivery: Please send four copies of your comment (an original and three copies) to Docket No. 05–068–1, Regulatory Analysis and Development, PPD, APHIS, Station 3A–03.8, 4700 River Road Unit 118, Riverdale, MD 20737–1238. Please state that your comment refers to Docket No. 05–068–1.

*Reading Room:* You may read any comments that we receive on this docket in our reading room. The reading room is located in room 1141 of the USDA South Building, 14th Street and Independence Avenue SW., Washington, DC. Normal reading room hours are 8 a.m. to 4:30 p.m., Monday through Friday, except holidays. To be sure someone is there to help you, please call (202) 690–2817 before coming.

*Other Information:* Additional information about APHIS and its programs is available on the Internet at *http://www.aphis.usda.gov*.

**FOR FURTHER INFORMATION CONTACT:** Mr. Alex Belano, Import Specialist, Commodity Import Analysis and Operations, Plant Health Programs, PPQ, APHIS, 4700 River Road Unit 133, Riverdale, MD 20737–1231; (301) 734–8758.

**SUPPLEMENTARY INFORMATION:**

## Background

The regulations in ''Subpart—Fruits and Vegetables'' (7 CFR 319.56 through 319.56–8, referred to below as the regulations) prohibit or restrict the importation of fruits and vegetables into the United States from certain parts of the world to prevent the introduction and dissemination of plant pests that are new to or not widely distributed within the United States.

The National Plant Quarantine Service (NPQS) of the Republic of Korea (South Korea) has requested that the Animal and Plant Health Inspection Service (APHIS) amend the regulations to allow peppers from South Korea to be imported into the continental United States. As part of our evaluation of that request, we have prepared a pest risk assessment (PRA) and a risk management document. Copies of the PRA and risk management document may be obtained from the person listed under **FOR FURTHER INFORMATION CONTACT** or viewed on the Regulations.gov Web site (see **ADDRESSES** above for instruction for accessing Regulations.gov).

The PRA, titled ''Importation of Fresh Paprika Pepper Fruit (*Capsicum annuum* L. var. *annuum*) from the Republic of Korea into the Continental United States'' (August 2005), evaluates the risks associated with the importation of peppers into the continental United States from South Korea. The PRA and supporting documents identified nine [1] pests of quarantine significance present in South Korea that could be introduced into the United States via peppers:

- The moths *Agrotis segetum* (Lepidoptera: Noctuidae), *Helicoverpa armigera* (Lepidoptera: Noctuidae), *Helicoverpa assulta* (Lepidoptera: Noctuidae), *Mamestra brassicae* (Lepidoptera: Noctuidae), *Ostrinia furnacalis* (Lepidoptera: Pyralidae), and *Spodoptera litura* (Lepidoptera: Noctuidae) feed on a wide range of host plants and occupy a large climate range. While these pests can be internal feeders on peppers, visible feeding signs such as holes, insect droppings, or other feeding damage may be detected by visual inspection. The relatively large size of all of these pests would also allow visual detection during at least some stages of their development.
- The fungus *Monilinia fructigena* (Helotiales: Sclerotiniaceae) is a pathogen of numerous hosts present over most of the United States. The fungus may be spread by insects, or spores may be disseminated by the wind. Although asymptomatic fruit may harbor latent infections, this usually only occurs in arid climates. In more humid climates, such as that in South Korea, the fungus typically causes a rapidly spreading, firm, brown decay, which may be easily detected during visual inspection.
- The thrips *Scirtothrips dorsalis* (Thysanoptera: Thripidae) and *Thrips palmi* (Thysanoptera: Thripidae) feed on a variety of host plants that occur in

[1] Although *Ralstonia solanacearum* race 3, which is considered synonymous with *Ralstonia solanacearum* race 3 biovar 2 (R3B2), was evaluated in the PRA as a pest of quarantine significance, we believe there is a low likelihood of the pathogen becoming introduced into the United States through the importation of peppers from South Korea. Given the large volumes of peppers already imported into the United States from countries where R3B2 is present without establishment of the pathogen, it seems unlikely that peppers for consumption are an effective pathway for introduction of R3B2.

most of the warmer parts of the United States. Both larvae and adults are external feeders and damage would be likely to be detected externally, but small infestations or hidden stages under calyces may not be likely to be found during visual inspection.

APHIS has determined that measures beyond standard port of entry inspection are required to mitigate the risk posed by these plant pests. The proposed phytosanitary measures include a requirement that the peppers would have to be grown in South Korea in insect-proof, pest-free greenhouses approved by and registered with NPQS. The greenhouses would have to be equipped with double self-closing doors, and any vents or openings in the greenhouses (other than the double self-closing doors) would have to be covered with 0.6 millimeter screening. The choice of mesh size for greenhouse screens is a compromise between pest exclusion and reduced ventilation. APHIS has concluded that a screen size of 0.6 millimeters, would exclude all but the smallest of the identified pests of concern. Even the smallest pests of concern are at least partially discouraged by the physical barrier of the 0.6 millimeter mesh and the reduced velocity of wind currents upon which they are borne. Reducing mesh size to the 0.2 millimeter mesh size required to completely exclude these smallest pests would severely hamper ventilation within the greenhouse resulting in increased temperature and humidity levels that would in turn favor the development of fungal diseases. APHIS has proposed risk mitigation measures in addition to screening (e.g., periodic growing season inspections) to ensure the appropriate level of phytosanitary protection. The greenhouses would have to be inspected monthly throughout the growing season by NPQS to ensure that relevant phytosanitary procedures are employed to exclude plant pests and diseases, and that the screens are intact. Such phytosanitary procedures are common measures taken by greenhouse facilities to maintain plant health. These procedures may include, for example, removing weeds, maintaining adequate ventilation, and ensuring that surfaces are free of plant and other debris.

We would require that the peppers be packed within 24 hours of harvest in a pest exclusionary packinghouse. During the time the packinghouse is in use for exporting peppers to the continental United States, the packinghouse could accept peppers only from registered approved production sites. The peppers would have to be safeguarded by an insect-proof mesh screen or plastic tarpaulin while in transit from the production site to the packinghouse and while awaiting packing. The peppers would have to be packed in insect-proof cartons or containers, or covered with insect-proof mesh or plastic tarpaulin, for transit to the continental United States. These safeguards would have to remain intact until the arrival of the peppers in the United States or the shipment would not be allowed to enter the United States.

The commodity imports would be restricted to commercial shipments only. Produce grown commercially is less likely to be infested with plant pests than noncommercial shipments. Noncommercial shipments are more prone to infestations because the commodity is often ripe to overripe, could be of a variety with unknown susceptibility to pests, and is often grown with little or no pest control. Commercial shipments, as defined in § 319.56–1, are shipments of fruits and vegetables that an inspector identifies as having been produced for sale and distribution in mass markets. Identification of a particular shipment as commercial is based on a variety of indicators, including, but not limited to, the quantity of produce, the type of packaging, identification of a grower or packinghouse on the packaging, and documents consigning the shipment to a wholesaler or retailer.

The proposed phytosanitary measures also include a requirement that each shipment of peppers would have to be accompanied by a phytosanitary certificate of inspection issued by NPQS and bearing an additional declaration that reads ''These peppers were grown in greenhouses in accordance with the conditions in 7 CFR 319.56–2oo and were inspected and found free from *Agrotis segetum*, *Helicoverpa armigera*, *Helicoverpa assulta*, *Mamestra brassicae*, *Monilinia fructigena*, *Ostrinia furnacalis*, *Scirtothrips dorsalis*, *Spodoptera litura*, and *Thrips palmi*.''

These mitigations are discussed in greater detail in the risk management document cited previously.

Under § 319.56–6, all imported fruits and vegetables, as a condition of entry into the United States, must be inspected; they are also subject to treatment at the port of first arrival if an inspector requires it. Section 319.56–6 also provides that any shipment of fruits and vegetables may be refused entry if the shipment is so infested with plant pests that an inspector determines that it cannot be cleaned or treated. We believe that the proposed conditions described above, as well as all other applicable requirements in § 319.56–6, would be adequate to prevent the introduction of plant pests into the continental United States with peppers imported from South Korea.

**Executive Order 12866 and Regulatory Flexibility Act**

This proposed rule has been reviewed under Executive Order 12866. The rule has been determined to be not significant for the purposes of Executive Order 12866 and, therefore, has not been reviewed by the Office of Management and Budget.

In accordance with 5 U.S.C. 603, we have performed an initial regulatory flexibility analysis, which is set out below, regarding the economic effects of this proposed rule on small entities. Based on the information we have, there is no reason to conclude that adoption of this proposed rule would result in any significant economic effect on a substantial number of small entities. However, we do not currently have all of the data necessary for a comprehensive analysis of the effects of this proposed rule on small entities that may incur benefits or costs from the implementation of this proposed rule.

We are proposing to amend the fruits and vegetables regulations to allow the importation into the continental United States of peppers from the Republic of Korea under certain conditions. As a condition of entry, the peppers would have to be grown in approved insect-proof, pest-free greenhouses and packed in pest-exclusionary packinghouses. In addition, the peppers would have to be safeguarded against pest infestation during their movement from the production site to the packinghouse and from the packinghouse to the continental United States. This action would allow for the importation of peppers from the Republic of Korea into the continental United States while continuing to provide protection against the introduction of quarantine pests.

The peppers to be imported into the United States are greenhouse-grown throughout South Korea. Based on information provided by NPQS, we expect that red varieties or cultivars ('Spirit,' 'Special,' 'Jubilee') would comprise 60–70 percent of the South Korean peppers that would be exported to the United States from South Korea. Yellow pepper cultivars or varieties ('Fiesta,' 'Romeca') would comprise 20–25 percent of exports, and orange ('Nassau,' 'Emily,' 'Boogie') pepper cultivars would comprise 5–10 percent of the peppers shipped to the United States. The Netherlands is the seed source for the peppers grown in South Korea.

The harvesting of the peppers would occur between November and July. The pepper fruits ready for export to the

United States would be packed in standard boxes (usually 5 kg/carton package) and stored under low temperature conditions. During distribution, temperatures would be maintained at 8–10 °C. The peppers would then be transported from South Korea by ship, using refrigerated containers, to western parts of the United States, and via air containers to eastern parts of the United States.

South Korea expects to export 250 metric tons of peppers per month, amounting to 3,000,000 kg annually. At 5 kg per carton, that would comprise 600,000 cartons per year, or about 600 40-foot container loads (assuming that each holds 1,000 cartons). This level of imports is small compared to current levels of production and imports into the United States.

In 2004, a volume of 446,006,999 kg of peppers, valued at $663.6 million, was imported into the United States. These imports included fresh or chilled fruits of the genus *Capsicum* or *Pimienta*. Mexico, Canada, the Netherlands, and Israel were the major exporting countries.

Regarding commercial pepper production in the United States, the National Agricultural Statistics Service (NASS) (2005) reports the production of bell and chile peppers separately. In 2004, the production of bell peppers for fresh market and processing amounted to 16,803,000 cwt [2] (762,171,259 kg), and was valued at $576,375,000. California and Florida are the major producing States. The production of chile peppers in 2004 was 4,753,000 cwt (215,592,453 kg), valued at $123,615,000. Chile peppers are defined as all peppers excluding bell peppers, and the estimates include both fresh and dry products. New Mexico and California are the major producing States.

**Effects on Small Entities**

The Regulatory Flexibility Act requires agencies to specifically consider the economic effects of their rules on small entities. The Small Business Administration (SBA) has established size criteria based on the North American Industry Classification System (NAICS) to determine which economic entities meet the definition of a small firm. The proposed rule may affect producers and wholesalers of peppers in the United States.

Pepper producers are classified into two categories: Other Vegetable (except Potato) and Melon Farming (NAICS 111219) and Food Crops Grown Under Cover (NAICS 11141). The small entity size standard for these producers is $750,000 or less in annual receipts. According to the 2002 Census of Agriculture, there were 31,550 farms classified under NAICS 111219 in 2002. The total market value of the agricultural products sold from these farms amounted to $10,159,518,000 with $10,093,575,000 accruing to sales of crops, and $65,943,000 to sales of livestock, poultry, and their products. Similarly, there were 1,778 farms classified under NAICS 11141 in 2002. The total value of the agricultural products sold from these farms amounted to $1,215,760,000, with $1,214,474,000 accruing to sales of crops and $1,286,000 to sales of livestock, poultry, and their products.

However, APHIS does not have information on the distribution of these farms by sales value of their products. We also do not have information for pepper producers specifically. Nevertheless, the 2002 Agricultural Census data indicated that the bell peppers harvested for sale in 2002 were harvested from 8,484 farms; and that the harvested areas were smaller than 5 acres on 90 percent of these farms. Though lack of data thus precludes more definitive conclusions regarding the potential economic impacts on small entities, the above data indicate that the majority of pepper farms that may be affected by this proposed rule would likely qualify as small.

Fruit and vegetable wholesalers are classified under NAICS 424480, and those with not more than 100 employees are considered small by SBA standards. There were 5,376 fresh fruit and vegetable merchant wholesalers in the United States in 2002, which employed a total of 110,578 employees. APHIS does not have information on the distribution of the wholesalers by numbers of employees. We also do not have data on the wholesale trade for peppers specifically. However, the above data indicate that the majority of fruit and vegetable wholesalers that may be affected by this rule would likely qualify as small entities.

Thus, APHIS expects that the producers and wholesalers in the United States that may be affected by the importation of peppers from South Korea would predominantly be small entities. Nevertheless, the economic effects are not expected to be significant. It has been estimated that about 3,000 tons of peppers would be imported annually from South Korea. In an economic analysis prepared by APHIS for a recent proposed rule,[3] it was estimated that annual imports of about 31,040 tons of peppers from the Central American countries of Costa Rica, El Salvador, Guatemala, Honduras, and Nicaragua would lead to a price decrease of approximately $0.01 to $0.02 per pound at the retail level. Since the volume imported from South Korea is expected to be significantly smaller, effects on domestic prices that may result from the importation of peppers from South Korea should be even lower. Thus, the price changes that may result from this level of increase in the supply of peppers are expected to be negligible.

On the other hand, importers and consumers in the United States may benefit from the proposed rule. Importers would have more import opportunities available due to the alternative sources of peppers. Consumers would benefit from an increased availability of the product. Nevertheless, changes of the magnitude presented here are not likely to have large repercussions for either of the categories of entities discussed above. APHIS welcomes information that the public may provide that would allow further assessment of possible economic effects of the proposed rule on small entities.

**Alternatives**

APHIS does not expect there to be any significant economic impact of the proposed rule on small entities. There is therefore no basis for setting forth alternatives that would minimize significant impacts.

Two alternatives to the proposed rule that would not meet stated objectives would be to either not change current regulations regarding the importation of peppers from South Korea or to allow their importation without requiring the proposed risk mitigations.

The first alternative would maintain current safeguards against the entry of exotic pests. However, this option would also mean that both countries would forgo economic benefits expected to be afforded by the proposed trade. Furthermore, APHIS has concluded that the pest risks associated with the importation of peppers from South Korea can be effectively mitigated by the proposed phytosanitary requirements; given that conclusion, it would be contrary to our obligations under international trade agreements to maintain a prohibition on the importation of peppers from South Korea.

[2] ''cwt'' is an abbreviation for ''hundredweight,'' the standard unit of production for certain agricultural products. One hundredweight equals 100 pounds.

[3] See 70 FR 59283–59290, Docket 05–003–1, published October 12, 2005.

Allowing the importation of fresh peppers from South Korea under phytosanitary requirements less restrictive than proposed could potentially lead to the introduction of pests not currently found in the United States. This option could result in losses and costs to domestic production and is, thus, not desirable.

We would appreciate any comments on the potential economic effects of allowing the importation into the United States of peppers from South Korea, and on how the proposed rule could be modified to reduce expected costs or burdens for small entities consistent with its objectives.

This proposed rule contains certain reporting and recordkeeping requirements (see ''Paperwork Reduction Act'' below).

**Executive Order 12988**

This proposed rule would allow peppers to be imported into the continental United States from South Korea. If this proposed rule is adopted, State and local laws and regulations regarding peppers imported under this rule would be preempted while the vegetable is in foreign commerce. Fresh vegetables are generally imported for immediate distribution and sale to the consuming public and would remain in foreign commerce until sold to the ultimate consumer. The question of when foreign commerce ceases in other cases must be addressed on a case-by-case basis. If this proposed rule is adopted, no retroactive effect will be given to this rule, and this rule will not require administrative proceedings before parties may file suit in court challenging this rule.

**National Environmental Policy Act**

To provide the public with documentation of APHIS' review and analysis of any potential environmental impacts associated with allowing the importation of peppers from the Republic of Korea into the continental United States, we have prepared an environmental assessment. The environmental assessment was prepared in accordance with: (1) The National Environmental Policy Act of 1969 (NEPA), as amended (42 U.S.C. 4321 *et seq.*), (2) regulations of the Council on Environmental Quality for implementing the procedural provisions of NEPA (40 CFR parts 1500–1508), (3) USDA regulations implementing NEPA (7 CFR part 1b), and (4) APHIS' NEPA Implementing Procedures (7 CFR part 372).

The environmental assessment may be viewed on the Internet on the Regulations.gov Web site and is available for public inspection in our reading room. (Instructions for accessing Regulations.gov and information on the location and hours of the reading room are provided under the heading **ADDRESSES** at the beginning of this proposed rule). In addition, copies may be obtained by calling or writing to the individual listed under **FOR FURTHER INFORMATION CONTACT.**

**Paperwork Reduction Act**

In accordance with section 3507(d) of the Paperwork Reduction Act of 1995 (44 U.S.C. 3501 *et seq.*), the information collection or recordkeeping requirements included in this proposed rule have been submitted for approval to the Office of Management and Budget (OMB). Please send written comments to the Office of Information and Regulatory Affairs, OMB, Attention: Desk Officer for APHIS, Washington, DC 20503. Please state that your comments refer to Docket No. 05–068–1. Please send a copy of your comments to: (1) Docket No. 05–068–1, Regulatory Analysis and Development, PPD, APHIS, Station 3A–03.8, 4700 River Road Unit 118, Riverdale, MD 20737–1238, and (2) Clearance Officer, OCIO, USDA, room 404–W, 14th Street and Independence Avenue SW., Washington, DC 20250. A comment to OMB is best assured of having its full effect if OMB receives it within 30 days of publication of this proposed rule.

APHIS is proposing to amend the fruits and vegetables regulations to allow the importation into the continental United States of peppers from the Republic of Korea under certain conditions. As a condition of entry, the peppers would have to be grown in approved insect-proof, pest free greenhouses and packed in pest-exclusionary packinghouses. In addition, the peppers would have to be safeguarded against pest infestation during their movement from the production site to the packinghouse and from the packinghouse to the continental United States. This action would allow for the importation of peppers from the Republic of Korea into the continental United States while continuing to provide protection against the introduction of quarantine pests.

As a result of this proposed rule, greenhouses must be inspected monthly throughout the growing season by NPQS to ensure phytosanitary procedures are employed to exclude plant pests and diseases, and that screens are intact.

Each shipment of peppers must be accompanied by a phytosanitary certificate of inspection issued by NPQS bearing the following additional declaration: ''These peppers were grown in greenhouses in accordance with the conditions in 7 CFR 319.5602oo and were inspected and found free from *Agrotis segetum*, *Helicoverpa armigera*, *Helicoverpa assulta*, *Mamestra brassicae*, *Monilinia fructigena*, *Ostrinia furnacalis*, *Scirtothrips dorsalis*, *Spodoptera litura*, and *Thrips palmi*.''

We are soliciting comments from the public (as well as affected agencies) concerning our proposed information collection and recordkeeping requirements. These comments will help us:

(1) Evaluate whether the proposed information collection is necessary for the proper performance of our agency's functions, including whether the information will have practical utility;

(2) Evaluate the accuracy of our estimate of the burden of the proposed information collection, including the validity of the methodology and assumptions used;

(3) Enhance the quality, utility, and clarity of the information to be collected; and

(4) Minimize the burden of the information collection on those who are to respond (such as through the use of appropriate automated, electronic, mechanical, or other technological collection techniques or other forms of information technology; *e.g.*, permitting electronic submission of responses).

*Estimate of burden:* Public reporting burden for this collection of information is estimated to average 0.5065 hours per response.

*Respondents:* National Plant Quarantine Service and growers.

*Estimated annual number of respondents:* 2.

*Estimated annual number of responses per respondent:* 304.

*Estimated annual number of responses:* 608.

*Estimated total annual burden on respondents:* 308 hours. (Due to averaging, the total annual burden hours may not equal the product of the annual number of responses multiplied by the reporting burden per response.)

Copies of this information collection can be obtained from Mrs. Celeste Sickles, APHIS' Information Collection Coordinator, at (301) 734–7477.

**Government Paperwork Elimination Act Compliance**

The Animal and Plant Health Inspection Service is committed to compliance with the Government Paperwork Elimination Act (GPEA), which requires Government agencies in general to provide the public the option of submitting information or transacting business electronically to the maximum extent possible. For information

pertinent to GPEA compliance related to this proposed rule, please contact Mrs. Celeste Sickles, APHIS' Information Collection Coordinator, at (301) 734–7477.

**List of Subjects in 7 CFR Part 319**

Coffee, Cotton, Fruits, Imports, Logs, Nursery stock, Plant diseases and pests, Quarantine, Reporting and recordkeeping requirements, Rice, Vegetables.

Accordingly, we propose to amend 7 CFR part 319 as follows:

## PART 319—FOREIGN QUARANTINE NOTICES

1. The authority citation for part 319 would continue to read as follows:

**Authority:** 7 U.S.C. 450, 7701–7772, and 7781–7786; 21 U.S.C. 136 and 136a; 7 CFR 2.22, 2.80, and 371.3.

2. A new § 319.56–2oo would be added to read as follows:

**§ 319.56–2oo Administrative instructions; conditions governing the entry of peppers from the Republic of Korea.**

Peppers (*Capsicum annuum* L. Var. *annuum*) from the Republic of Korea may be imported into the continental United States only under the following conditions:

(a) The peppers must be grown in the Republic of Korea in insect-proof greenhouses approved by and registered with the National Plant Quarantine Service (NPQS).

(b) The greenhouses must be equipped with double self-closing doors, and any vents or openings in the greenhouses (other than the double self-closing doors) must be covered with 0.6 mm screening in order to prevent the entry of pests into the greenhouse.

(c) The greenhouses must be inspected monthly throughout the growing season by NPQS to ensure phytosanitary procedures are employed to exclude plant pests and diseases, and that the screens are intact.

(d) The peppers must be packed within 24 hours of harvest in a pest exclusionary packinghouse. During the time the packinghouse is in use for exporting peppers to the continental United States, the packinghouse can accept peppers only from registered approved production sites. The peppers must be safeguarded by an insect-proof mesh screen or plastic tarpaulin while in transit from the production site to the packinghouse and while awaiting packing. The peppers must be packed in insect-proof cartons or containers, or covered with insect-proof mesh or plastic tarpaulin, for transit to the continental United States. These safeguards must remain intact until the arrival of the peppers in the United States or the shipment will not be allowed to enter the United States.

(e) Each shipment of peppers must be accompanied by a phytosanitary certificate of inspection issued by NPQS bearing the following additional declaration: ''These peppers were grown in greenhouses in accordance with the conditions in 7 CFR 319.56–2oo and were inspected and found free from *Agrotis segetum*, *Helicoverpa armigera*, *Helicoverpa assulta*, *Mamestra brassicae*, *Monilinia fructigena*, *Ostrinia furnacalis*, *Scirtothrips dorsalis*, *Spodoptera litura*, and *Thrips palmi*.''

(f) The peppers must be imported in commercial shipments only.

Done in Washington, DC, this 21st day of December 2005.

**Nick Gutierrez,**

*Acting Administrator, Animal and Plant Health Inspection Service.*

[FR Doc. E5–8028 Filed 12–28–05; 8:45 am]

BILLING CODE 3410–34–P

## DEPARTMENT OF TRANSPORTATION

### Federal Aviation Administration

### 14 CFR Part 39

**[Docket No. 98–ANE–72–AD]**

**RIN 2120–AA64**

## Airworthiness Directives; Honeywell International Inc., (Formerly AlliedSignal, Inc., Formerly Textron Lycoming, Formerly Avco Lycoming) T5311A, T5311B, T5313B, T5317A, T5317A–1, T5317B Series Turboshaft Engines and Lycoming Former Military T53–L–11B, T53–L–11D, T53–L–13B, T53–L–13B/D, and T53–L–703 Series Turboshaft Engines

**AGENCY:** Federal Aviation Administration (FAA), DOT.

**ACTION:** Notice of proposed rulemaking (NPRM).

**SUMMARY:** The FAA proposes to supersede an existing airworthiness directive (AD), AD 98–22–11, for AlliedSignal, Inc. T5317A–1 turboshaft engines. That AD currently requires repetitive engine fuel pump pressure tests of certain fuel control regulator assemblies to determine if both fuel pumps in the fuel control regulator assemblies are producing fuel pressure. That AD also requires replacing the fuel control regulator assembly, if necessary. This proposed AD would require initial and repetitive visual and dimensional inspections of fuel control regulator assembly main and secondary drive shaft and pump gear splines, installed in certain fuel control regulator assemblies. This proposed AD would also expand the engine applicability, and include certain engines installed on helicopters certified under § 21.25 or 21.27 of the Code of Federal Regulations (14 CFR 21.25 or 14 CFR 21.27). This proposed AD results from several reports of loss of fuel flow from the engine fuel control regulator assembly due to failure of both main and secondary drive shaft and pump gear splines. We are proposing this AD to prevent in-flight engine failure and forced autorotation landing.

**DATES:** We must receive any comments on this proposed AD by February 27, 2006.

**ADDRESSES:** Use one of the following addresses to comment on this proposed AD:

- By mail: Federal Aviation Administration (FAA), New England Region, Office of the Regional Counsel, Attention: Rules Docket No. 98–ANE–72–AD, 12 New England Executive Park, Burlington, MA 01803–5299.
- By fax: (781) 238–7055.
- By e-mail: *9-ane-adcomment@faa.gov.*

Contact Honeywell International Inc., Attn: Data Distribution, M/S 64–3/2101–201, P.O. Box 29003, Phoenix, AZ 85038–9003; telephone: (602) 365–2493; fax:(602) 365–5577, for the service information identified in this proposed AD.

You may examine the AD docket at the FAA, New England Region, Office of the Regional Counsel, 12 New England Executive Park, Burlington, MA.

**FOR FURTHER INFORMATION CONTACT:** Robert Baitoo, Aerospace Engineer, Los Angeles Aircraft Certification Office, FAA, Transport Airplane Directorate, 3960 Paramount Blvd., Lakewood, CA 90712–4137; telephone: (562) 627–5245, fax: (562) 627–5210.

**SUPPLEMENTARY INFORMATION:**

### Comments Invited

We invite you to send any written relevant data, views, or arguments regarding this proposal. Send your comments to an address listed under **ADDRESSES.** Include ''AD Docket No. 98–ANE–72–AD'' in the subject line of your comments. If you want us to acknowledge receipt of your mailed comments, send us a self-addressed, stamped postcard with the docket number written on it; we will date-stamp your postcard and mail it back to you. We specifically invite comments on the overall regulatory, economic, environmental, and energy aspects of the proposed AD. If a person contacts us

verbally, and that contact relates to a substantive part of this proposed AD, we will summarize the contact and place the summary in the docket. We will consider all comments received by the closing date and may amend the proposed AD in light of those comments.

### Examining the AD Docket

You may examine the AD Docket (including any comments and service information), by appointment, between 8 a.m. and 4:30 p.m., Monday through Friday, except Federal holidays. See **ADDRESSES** for the location.

### Discussion

On November 25, 1998, we issued AD 98–22–11, Amendment 39–10926 (63 FR 66741, December 3, 1998). That AD requires repetitive pressure testing to determine if both fuel pumps in the fuel control regulator assembly, part number 1–170–240–93, are producing fuel pressure, and, if necessary, replacing the fuel regulator assembly with a serviceable part. That AD was the result of a report of an accident involving a T5317A–1 turboshaft engine installed on a Kaman Aerospace model K–1200 helicopter engaged in logging operations. That condition, if not corrected, could result in engine failure and forced autorotation landing.

### Actions Since AD 98–22–11 Was Issued

Since we issued that AD, we received in 2004 a report of an engine failure in a single-engine helicopter, which led to a forced autorotation landing. Investigation revealed that excessive wear of the fuel control regulator assembly pump splines caused the power loss. We also became aware of reports of abnormally excessive wear of fuel control regulator pump assembly pump splines. These parts are installed in Goodrich Pump & Engine Control Systems, Inc. (GPECS) (formerly Chandler Evans Control Systems) engine fuel control regulator assembly models TA–2S, TA–2G, TA–2F, TA–7, and TA–10. These fuel control regulator assembly models are installed on T5311A, T5311B, T5313B, T5317A, T5317A–1, T5317B, T53–L–11B, T53–L–11D, T53–L–13B, T53–L–13B/D, and T53–L–703 series turboshaft engines. This condition, if not corrected, could result in an in-flight engine failure and forced autorotation landing.

### Relevant Service Information

We have reviewed and approved the technical contents of GPECS (TA series) Service Bulletin (SB) No. 73–42, Revision 1, dated August 12, 2004. That SB describes procedures for performing visual and dimensional inspections of the fuel control regulator assembly pump splines.

### Differences Between the Proposed AD and the Manufacturer's Service Information

Although the SB recommends return of the entire fuel control regulator assembly to GPECS if the pump spline wear is not within limits, this proposed AD does not require that.

### FAA's Determination and Requirements of the Proposed AD

We have evaluated all pertinent information and identified an unsafe condition that is likely to exist or develop on other products of this same type design. We are proposing this AD, which would require initial and repetitive visual and dimensional inspections of the fuel control regulator pump assembly pump splines of GPECS engine fuel controls models TA–2S, TA–2G, TA–2F, TA–7, and TA–10. The proposed AD would require you to use the service information described previously to perform these actions.

### Costs of Compliance

There are about 700 Honeywell International Inc., T5311A, T5311B, T5313B, T5317A, T5317A–1, and T5317B series turboshaft engines and Lycoming former military T53–L–11B, T53–L–11D, T53–L–13B, T53–L–13B/D, and T53–L–703 series turboshaft engines of the affected design in the worldwide fleet. We estimate that this proposed AD would affect 592 engines installed on helicopters of U.S. registry. We also estimate that it would take about 8 work hours per engine to perform an inspection, and that the average labor rate is $65 per work hour. Based on these figures, we estimate the cost of the proposed AD to U.S. operators for one inspection to be $307,840. A replacement fuel control regulator pump assembly would cost about $18,000. We estimate that if all affected fuel control regulator pump assemblies failed inspection and had to be replaced, the total parts cost of the proposed AD to U.S. operators would be $10,656,000.

### Authority for This Rulemaking

Title 49 of the United States Code specifies the FAA's authority to issue rules on aviation safety. Subtitle I, section 106, describes the authority of the FAA Administrator. Subtitle VII, Aviation Programs, describes in more detail the scope of the Agency's authority.

We are issuing this rulemaking under the authority described in subtitle VII, part A, subpart III, section 44701, ''General requirements.'' Under that section, Congress charges the FAA with promoting safe flight of civil aircraft in air commerce by prescribing regulations for practices, methods, and procedures the Administrator finds necessary for safety in air commerce. This regulation is within the scope of that authority because it addresses an unsafe condition that is likely to exist or develop on products identified in this rulemaking action.

### Regulatory Findings

We have determined that this proposed AD would not have federalism implications under Executive Order 13132. This proposed AD would not have a substantial direct effect on the States, on the relationship between the national Government and the States, or on the distribution of power and responsibilities among the various levels of government.

For the reasons discussed above, I certify that the proposed regulation:

1. Is not a ''significant regulatory action'' under Executive Order 12866;
2. Is not a ''significant rule'' under the DOT Regulatory Policies and Procedures (44 FR 11034, February 26, 1979); and
3. Would not have a significant economic impact, positive or negative, on a substantial number of small entities under the criteria of the Regulatory Flexibility Act.

We prepared a summary of the costs to comply with this proposal and placed it in the AD Docket. You may get a copy of this summary by sending a request to us at the address listed under **ADDRESSES.** Include ''AD Docket No. 98–ANE–72–AD'' in your request.

### List of Subjects in 14 CFR Part 39

Air transportation, Aircraft, Aviation safety, Safety.

### The Proposed Amendment

Accordingly, under the authority delegated to me by the Administrator, the Federal Aviation Administration proposes to amend 14 CFR part 39 as follows:

## PART 39—AIRWORTHINESS DIRECTIVES

1. The authority citation for part 39 continues to read as follows:

**Authority:** 49 U.S.C. 106(g), 40113, 44701.

### § 39.13 [Amended]

2. The FAA amends § 39.13 by removing Amendment 63 FR 66741 (December 3, 1998) airworthiness directive to read as follows:

**Honeywell International Inc.:** Docket No. 98–ANE–72–AD.

**Comments Due Date**

(a) The Federal Aviation Administration (FAA) must receive comments on this airworthiness directive (AD) action by February 27, 2006.

**Affected ADs**

(b) This AD supersedes AD 98–22–11, Amendment 39–10926.

**Applicability**

(c) This AD applies to Honeywell International Inc., (formerly AlliedSignal, Inc., formerly Textron Lycoming, formerly Avco Lycoming) T5311A, T5311B, T5313B, T5317A, T5317A–1, and T5317B series turboshaft engines and Lycoming former military T53–L–11B, T53–L–11D, T53–L–13B, T53–L–13B/D, and T53–L–703 series turboshaft engines using Goodrich Pump & Engine Control Systems, Inc. (GPECS) (formerly Chandler Evans Control Systems) engine fuel control regulator assembly models TA–2S, TA–2G, TA–2F, TA–7, or TA–10.

(d) The T5311A, T5311B, T5313B, T5317A, T5317A–1, and T5317B turboshaft engines are installed on, but not limited to, Bell 204, 205, and Kaman K–1200 helicopters. Lycoming T53–L–11B, T53–L–11D, T53–L–13B, T53–L–13B/D, and T53–L–703 series turboshaft engines are installed on, but not limited to, Bell AH–1 and UH–1 helicopters certified under § 21.25 or 21.27 of the Code of Federal Regulations (14 CFR 21.25 or 14 CFR 21.27).

**Unsafe Condition**

(e) This AD results from several reports of loss of fuel flow from the engine fuel control regulator assembly due to failure of both main and secondary drive shaft and pump gear splines. We are issuing this AD to prevent in-flight engine failure and forced autorotation landing.

**Compliance**

(f) You are responsible for having the actions required by this AD performed within the compliance times specified unless the actions have already been done.

**Initial Visual and Dimensional Inspection**

(g) Within 150 flight hours after the effective date of this AD, do the following:

(1) Remove the fuel control regulator assembly from the engine and perform an initial visual and dimensional inspection of the fuel control regulator assembly main and secondary drive shaft and pump gear splines for wear.

(2) Use paragraphs 2.A. through 2.D.(7) and 2.E. through 2.F.(2) of the Accomplishment Instructions of Goodrich Pump & Engine Control Systems, Inc. (TA series) Service Bulletin (SB) No. 73–42, Revision 1, dated August 12, 2004 to do the inspection.

(3) Do not install any engine fuel control regulator assembly that fails inspection.

**Repetitive Visual and Dimensional Inspections**

(h) Thereafter, within every 1, 250 flight hours since-last-inspection, perform repetitive visual and dimensional inspections of the fuel control regulator assembly main and secondary drive shaft and pump gear splines for wear, as specified in paragraphs (g)(1) through (g)(3) of this AD.

**Alternative Methods of Compliance**

(i) The Manager, Los Angeles Aircraft Certification Office, has the authority to approve alternative methods of compliance for this AD if requested using the procedures found in 14 CFR 39.19.

**Related Information**

(j) Honeywell International Inc. Service Bulletin No. T53–0138, Revision 1, dated May 5, 2005, also pertains to the subject of this AD, and is an FAA-approved alternative method of compliance for AD 98–22–11.

Issued in Burlington, Massachusetts, on December 22, 2005.

**Peter A. White,**

*Acting Manager, Engine and Propeller Directorate, Aircraft Certification Service.*

[FR Doc. E5–8019 Filed 12–28–05; 8:45 am]

BILLING CODE 4910–13–P

---

## DEPARTMENT OF TRANSPORTATION

## Federal Aviation Administration

## 14 CFR Part 39

**[Docket No. 97–ANE–44–AD]**

**RIN 2120–AA64**

## Airworthiness Directives; Pratt & Whitney PW4164, PW4168, and PW4168A Series Turbofan Engines

**AGENCY:** Federal Aviation Administration (FAA), DOT.

**ACTION:** Notice of proposed rulemaking (NPRM).

**SUMMARY:** The FAA proposes to supersede an existing airworthiness directive (AD) for Pratt & Whitney (PW) PW4164, PW4168, and PW4168A series turbofan engines. That AD currently requires initial and repetitive torque checks for loose or broken front pylon mount bolts made from INCO 718 material and MP159 material, and initial and repetitive visual inspections of the primary mount thrust load path. This proposed AD would require the same actions, but at reduced intervals for front pylon mount bolts made from MP159 material. This proposed AD results from analysis by the manufacturer that the MP159 material pylon bolts do not meet the full life cycle torque check interval requirement, in a bolt-out condition. We are proposing this AD to prevent front pylon mount bolt and primary mount thrust load path failure, which could result in an engine separating from the airplane.

**DATES:** We must receive any comments on this proposed AD by February 27, 2006.

**ADDRESSES:** Use one of the following addresses to submit comments on this proposed AD:

- By mail: Federal Aviation Administration (FAA), New England Region, Office of the Regional Counsel, Attention: Rules Docket No. 97–ANE–44–AD, 12 New England Executive Park, Burlington, MA 01803–5299.
- By fax: (781) 238–7055.
- By e-mail: *9-ane-adcomment@faa.gov.*

Contact Pratt & Whitney, 400 Main St., East Hartford, CT 06108; telephone (860) 565–7700, fax (860) 565–1605 for the service information identified in this proposed AD.

You may examine the AD docket at the FAA, New England Region, Office of the Regional Counsel, 12 New England Executive Park, Burlington, MA.

**FOR FURTHER INFORMATION CONTACT:** Barbara Caufield, Aerospace Engineer, Engine Certification Office, FAA, Engine and Propeller Directorate, 12 New England Executive Park, Burlington, MA 01803–5299; telephone (781) 238–7146, fax (781) 238–7199.

**SUPPLEMENTARY INFORMATION:**

### Comments Invited

We invite you to submit any written relevant data, views, or arguments regarding this proposal. Send your comments to an address listed under **ADDRESSES**. Include ''AD Docket No. 97–ANE–44–AD'' in the subject line of your comments. If you want us to acknowledge receipt of your mailed comments, send us a self-addressed, stamped postcard with the docket number written on it; we will date-stamp your postcard and mail it back to you. We specifically invite comments on the overall regulatory, economic, environmental, and energy aspects of the proposed AD. If a person contacts us verbally, and that contact relates to a substantive part of this proposed AD, we will summarize the contact and place the summary in the docket. We will consider all comments received by the closing date and may amend the proposed AD in light of those comments.

### Examining the AD Docket

You may examine the AD Docket (including any comments and service information), by appointment, between 8 a.m. and 4:30 p.m., Monday through Friday, except Federal holidays. See **ADDRESSES** for the location.

### Discussion

On December 19, 2002, we issued AD 2000–16–02R1, Amendment 39–12989 (68 FR 28, January 2, 2003). That AD requires initial and repetitive torque

checks for loose or broken front pylon mount bolts made from INCO 718 material and MP159 material. That AD also requires initial and repetitive visual inspections of the primary mount thrust load path. That AD was the result of component testing to assess the low-cycle-fatigue life of the MP159 material bolts and the development of a new design forward engine mount bearing housing. That condition, if not corrected, could result in front pylon mount bolt and primary mount thrust load path failure, which could result in an engine separating from the airplane.

### Actions Since AD 2000–16–02R1 Was Issued

Since AD 2000–16–02R1 was issued, the manufacturer performed new fatigue load analysis of the engine mount system, as part of supporting a new 180-minute-flight airplane mission, and supporting updated flight liftoff calculations. The analysis revealed that the MP159 material pylon bolts do not meet the full life cycle torque check interval requirement, in a bolt-out condition.

### Relevant Service Information

We have reviewed and approved the technical contents of PW Alert Service Bulletin (ASB) PW4G–100–A71–32, dated April 15, 2005, that describes procedures for performing reduced interval initial and repetitive torque checks of MP159 material front pylon mount bolts.

### FAA's Determination and Requirements of the Proposed AD

We have evaluated all pertinent information and identified an unsafe condition that is likely to exist or develop on other products of this same type design. We are proposing this AD, which would require the same torque checks and inspections specified in AD 2000–16–02R1 except for bolts made from MP159 material. This proposed AD would reduce the torque check compliance times for the front pylon mount bolts made from MP159 material to the following:

- For bolts with fewer than 2,200 CSN on the effective date of the proposed AD, initial torque check before accumulating 2,700 CSN, or at the next engine removal for any cause, whichever occurs sooner.
- For bolts with 2,200 CSN or more on the effective date of the proposed AD, initial torque check within the next 500 CIS, or at the next engine removal for any cause, whichever occurs sooner.
- Thereafter, perform torque checks at intervals not to exceed 2,700 CIS since last torque inspection.

The proposed AD would require that you do these actions using the service information described previously and listed in the proposed AD.

### Costs of Compliance

About 60 engines installed on airplanes of U.S. registry are affected by this proposed AD. We estimate that it would take about four work hours per engine to perform the proposed actions, and that the average labor rate is $65 per work hour. Required parts would cost about $26,500 per engine. Based on these figures, we estimate the total cost of the proposed AD to U.S. operators to be $1,605,600.

### Special Flight Permits Paragraph Removed

Paragraph (g) of the current AD, AD 2000–16–02R1, contains a paragraph pertaining to special flight permits. Even though this proposed AD does not contain a similar paragraph, we have made no changes with regard to the use of special flight permits to operate the airplane to a repair facility to do the work required. In July 2002, we published a new Part 39 that contains a general authority regarding special flight permits and airworthiness directives; see Docket No. FAA–2004–8460, Amendment 39–9474 (69 FR 47998, July 22, 2002). Thus, when we now supersede ADs we will not include a specific paragraph on special flight permits unless we want to limit the use of that general authority granted in § 39.23.

### Authority for This Rulemaking

Title 49 of the United States Code specifies the FAA's authority to issue rules on aviation safety. Subtitle I, Section 106, describes the authority of the FAA Administrator. Subtitle VII, Aviation Programs, describes in more detail the scope of the Agency's authority.

We are issuing this rulemaking under the authority described in subtitle VII, part A, subpart III, section 44701, ''General requirements.'' Under that section, Congress charges the FAA with promoting safe flight of civil aircraft in air commerce by prescribing regulations for practices, methods, and procedures the Administrator finds necessary for safety in air commerce. This regulation is within the scope of that authority because it addresses an unsafe condition that is likely to exist or develop on products identified in this rulemaking action.

### Regulatory Findings

We have determined that this proposed AD would not have federalism implications under Executive Order 13132. This proposed AD would not have a substantial direct effect on the States, on the relationship between the national Government and the States, or on the distribution of power and responsibilities among the various levels of government.

For the reasons discussed above, I certify that the proposed regulation:

1. Is not a ''significant regulatory action'' under Executive Order 12866;
2. Is not a ''significant rule'' under the DOT Regulatory Policies and Procedures (44 FR 11034, February 26, 1979); and
3. Would not have a significant economic impact, positive or negative, on a substantial number of small entities under the criteria of the Regulatory Flexibility Act.

We have prepared a summary of the costs to comply with this proposal and placed it in the AD Docket. You may get a copy of this summary by sending a request to us at the address listed under **ADDRESSES.** Include ''AD Docket No. 97–ANE–44–AD'' in your request.

### List of Subjects in 14 CFR Part 39

Air transportation, Aircraft, Aviation safety, Safety.

### The Proposed Amendment

Accordingly, under the authority delegated to me by the Administrator, the Federal Aviation Administration proposes to amend 14 CFR part 39 as follows:

## PART 39—AIRWORTHINESS DIRECTIVES

1. The authority citation for part 39 continues to read as follows:

**Authority:** 49 U.S.C. 106(g), 40113, 44701.

### § 39.13 [Amended]

2. The FAA amends § 39.13 by removing Amendment 39–12989 (68 FR 28, January 2, 2003) and by adding a new airworthiness directive to read as follows:

**Pratt & Whitney:** Docket No. 97–ANE–44–AD.

#### Comments Due Date

(a) The Federal Aviation Administration (FAA) must receive comments on this airworthiness directive (AD) action by February 27, 2006.

#### Affected ADs

(b) This AD supersedes AD 2000–16–02R1.

#### Applicability

(c) This AD applies to Pratt & Whitney (PW) PW4164, PW4168, and PW4168A series turbofan engines, with front pylon mount bolts, part number (P/N) 54T670 or 51U615, installed. These engines are installed on, but not limited to, Airbus A330 series airplanes.

**Unsafe Condition**

(d) This AD results from analysis by the manufacturer that MP159 material pylon bolts do not meet the full life cycle torque check interval requirement, in a bolt-out condition. We are issuing this AD to prevent front pylon mount bolt and primary mount thrust load path failure, which could result in an engine separating from the airplane.

**Compliance**

(e) You are responsible for having the actions required by this AD performed within the compliance times specified unless the actions have already been done.

**INCO 718 Material Bolts Torque Checks**

(f) Perform initial and repetitive torque checks of INCO 718 material front pylon mount bolts, P/N 54T670, and replace, if necessary, with new bolts, using the Accomplishment Instructions of PW Alert Service Bulletin (ASB) PW4G–100–A71–9, Revision 1, dated November 24, 1997, as follows:

(1) For front pylon mount bolts, P/N 54T670, with fewer than 1,000 cycles-since-new (CSN) on the effective date of this AD, do the following using Part (A) of the Accomplishment Instructions of the ASB:

(i) Perform an initial torque check before accumulating 1,250 CSN or at the next engine removal for cause, whichever occurs sooner.

(ii) Thereafter, perform torque checks at intervals of no fewer than 750 or no more than 1,250 cycles-in-service (CIS) since last torque check, not to exceed the life limit of 11,000 CSN.

(2) For front pylon mount bolts, P/N 54T670, with 1,000 CSN or more but fewer than 5,750 CSN on the effective date of this AD, do the following using Part (A) of the Accomplishment Instructions of the ASB:

(i) Perform an initial torque check within 250 CIS after the effective date of this AD, or at the next engine removal for any cause, whichever occurs sooner.

(ii) Thereafter, perform torque checks at intervals of no fewer than 750 or no more than 1,250 CIS since last torque check, not to exceed the life limit of 11,000 CSN.

(3) For front pylon mount bolts, P/N 54T670, with 5,750 CSN or more on the effective date of this AD, do the following using Part (B) of the Accomplishment Instructions of the ASB:

(i) Perform an initial torque check within 250 CIS after the effective date of this AD, or before the next engine removal for any cause, whichever occurs sooner.

(ii) Thereafter, perform torque checks at intervals of no fewer than 750 or no more than 1,250 CIS since last torque check, not to exceed the front pylon mount bolt P/N 54T670, life limit of 11,000 CSN.

(4) Before further flight, replace all four bolts using Part (A), Paragraph 1(D) of the Accomplishment Instructions of the ASB, if any of the bolts are loose or broken.

**MP159 Material Bolts Inspections**

(g) Perform initial and repetitive torque checks of front pylon mount bolts, P/N 51U615, using the Accomplishment Instructions of PW ASB PW4G–100–A71–32, dated April 15, 2005, as follows:

(1) For front pylon mount bolts with fewer than 2,200 CSN on the effective date of this AD, perform the initial torque inspection before accumulating 2,700 CSN, or at the next engine removal for any cause, whichever occurs sooner.

(2) For front pylon mount bolts with 2,200 CSN or more on the effective date of this AD, perform the initial torque check within the next 500 CIS, or at the next engine removal for any cause, whichever occurs sooner.

(3) Thereafter, perform torque inspections at intervals not to exceed 2,700 CIS since last torque inspection.

(4) Before further flight, replace all four bolts using Paragraph 1.E. of the Accomplishment Instructions of the ASB, if any are loose or broken.

**Primary Mount Thrust Load Path Inspections**

(h) Perform initial and repetitive visual inspections of the primary mount thrust load path using the Accomplishment Instructions of PW ASB PW4G–100–A71–18, Revision 2, dated January 15, 2002, as follows:

(1) For forward engine mount assemblies with fewer than 1,000 CSN on the effective date of this AD, perform the initial visual inspection at the earlier of the following:

(i) Before accumulating 1,250 CSN; or

(ii) The next engine removal for any cause.

(2) For forward engine mount assemblies with 1,000 CSN or more on the effective date of this AD, perform the initial visual inspection within 250 CIS after the effective date of this AD, or the next engine removal for any cause, whichever occurs sooner.

(3) Thereafter, perform visual inspections at intervals of no fewer than 750 or no more than 1,250 CIS since last visual inspection.

(4) Before further flight, replace all cracked parts with serviceable parts and inspect the primary thrust load path components using Paragraph 4 of the Accomplishment Instructions of the ASB.

**Terminating Action**

(i) Replacement of the forward engine mount bearing housing, P/N 59T794 or P/N 54T659 with P/N 52U420, using SB PW4G–100–71–22, dated January 15, 2002, constitutes terminating action to the inspection requirements of paragraph (h) of this AD.

**Alternative Methods of Compliance**

(j) The Manager, Engine Certification Office, has the authority to approve alternative methods of compliance for this AD if requested using the procedures found in 14 CFR 39.19.

**Related Information**

(k) None.

Issued in Burlington, Massachusetts, on December 22, 2005.

**Peter A. White,**

*Acting Manager, Engine and Propeller Directorate, Aircraft Certification Service.*

[FR Doc. E5–8020 Filed 12–28–05; 8:45 am]

BILLING CODE 4910–13–P

## FEDERAL TRADE COMMISSION

## 16 CFR Chapter I

## Notice of Intent To Request Public Comments

**AGENCY:** Federal Trade Commission.

**ACTION:** Notice of intent to request public comments.

**SUMMARY:** As part of its ongoing systematic review of all Federal Trade Commission rules and guides, the Commission gives notice that, during 2006, it intends to request public comments on the rules and guides listed below. The Commission will request comments on, among other things, the economic impact of, and the continuing need for, the rules and guides; possible conflict between the rules and guides and state, local, or other federal laws or regulations; and the effect on the rules and guides of any technological, economic, or other industry changes. No Commission determination on the need for or the substance of the rules and guides should be inferred from the notice of intent to publish requests for comments. In addition, the Commission announces a revised 10-year regulatory review schedule.

**FOR FURTHER INFORMATION CONTACT:** Further details may be obtained from the contact person listed for the particular rule.

**SUPPLEMENTARY INFORMATION:** The Commission intends to initiate a review of and solicit public comments on the following rules and guides during 2006:

(1) *Guides for the Nursery Industry*, 16 CFR part 18. Agency Contact: Janice Frankle (202) 326–3022, Federal Trade Commission, Bureau of Consumer Protection, Division of Enforcement, 600 Pennsylvania Ave., NW., Washington, DC 20580.

(2) *Test Procedures and Labeling Standards for Recycled Oil*, 16 CFR part 311. Agency Contact: Neil Blickman, (202) 326–3038, Federal Trade Commission, Bureau of Consumer Protection, Division of Enforcement, 600 Pennsylvania Ave., NW., Washington, DC 20580.

(3) *Used Motor Vehicle Trade Regulation Rule*, 16 CFR part 455. Agency Contact: John Hallerud, (312) 960–5615, Federal Trade Commission, Midwest Region, 55 East Monroe Street, Suite 1860, Chicago, Illinois 60603.

In addition, the Commission previously announced that regulatory review of the Appliance Labeling Rule, 16 CFR part 305, would be combined with rulemaking required by Section 137 of the Energy Policy Act of 2005. An Advance Notice of Proposed

Rulemaking in that proceeding was published on November 2, 2005, 70 FR 66307, and comments are due on January 13, 2006.

As part of its ongoing program to review all current Commission rules and guides, the Commission also has tentatively scheduled reviews of other rules and guides for 2007 through 2016. A copy of this tentative schedule is appended. The Commission, in its discretion, may modify or reorder the schedule in the future to incorporate new legislative rules, or to respond to external factors (such as changes in the law) or other considerations.

**Authority:** 15 U.S.C. 41–58.

By direction of the Commission.

**Donald S. Clark,**

*Secretary.*

APPENDIX—REGULATORY REVIEW MODIFIED TEN-YEAR SCHEDULE

| 16 CFR part | Topic | Year to review |
|---|---|---|
| 24 | Guides for Select Leather and Imitation Leather Products | 2007 |
| 435 | Mail or Telephone Order Merchandise Rule | 2007 |
| 500 | Regulations Under Section 4 of the Fair Packaging and Labeling Act (FPLA) | 2007 |
| 501 | Exemptions from Part 500 of the FPLA | 2007 |
| 502 | Regulations Under Section 5(C) of the FPLA | 2007 |
| 503 | Statements of General Policy or Interpretations Under the FPLA | 2007 |
| 306 | Automotive Fuel Ratings, Certification and Posting Rule | 2008 |
| 424 | Retail Food Store Advertising and Marketing Practices Rule | 2008 |
| 429 | Rule concerning Cooling-Off Period for Sales Made at Homes or at Certain Other Locations | 2008 |
| 444 | Credit Practices Rule | 2008 |
| 601 | Summary of Consumer Rights, Notice of User Responsibilities, and Notice of Furnisher Responsibilities under the Fair Credit Reporting Act. | 2008 |
| 254 | Guides for Private Vocational and Distance Education Schools | 2009 |
| 260 | Guides for the Use of Environmental Marketing Claims | 2009 |
| 300 | Rules and Regulations under the Wool Products Labeling Act | 2009 |
| 301 | Rules and Regulations under the Fur Products Labeling Act | 2009 |
| 303 | Rules and Regulations under the Textile Fiber Products Identification Act | 2009 |
| 425 | Rule Concerning the Use of Negative Option Plans | 2009 |
| 239 | Guides for the Advertising of Warranties and Guarantees | 2010 |
| 433 | Preservation of Consumers' Claims and Defenses Rule | 2010 |
| 700 | Interpretations of Magnuson-Moss Warranty Act | 2010 |
| 701 | Disclosure of Written Consumer Product Warranty Terms and Conditions | 2010 |
| 702 | Pre-sale Availability of Written Warranty Terms | 2010 |
| 703 | Informal Dispute Settlement Procedures | 2010 |
| 14 | Administrative Interpretations, General Policy Statements, and Enforcement Policy Statements | 2011 |
| 23 | Guides for the Jewelry, Precious Metals, and Pewter Industries | 2011 |
| 423 | Care Labeling Rule | 2011 |
| 20 | Guides for the Rebuilt, Reconditioned and Other Used Automobile Parts Industry | 2012 |
| 233 | Guides Against Deceptive Pricing | 2012 |
| 238 | Guides Against Bait Advertising | 2012 |
| 240 | Guides for Advertising Allowances and Other Merchandising Payments and Services | 2012 |
| 251 | Guide Concerning Use of the Word "Free" and Similar Representations | 2012 |
| 259 | Guide Concerning Fuel Economy Advertising for New Automobiles | 2012 |
| 310 | Telemarketing Sales Rule | 2013 |
| 801 | Hart-Scott-Rodino Antitrust Improvements Act Coverage Rules | 2013 |
| 802 | Hart-Scott-Rodino Antitrust Improvements Act Exemption Rules | 2013 |
| 803 | Hart-Scott-Rodino Antitrust Improvements Act Transmittal Rules | 2013 |
| 304 | Rules and Regulations under the Hobby Protection Act | 2014 |
| 309 | Labeling Requirements for Alternative Fuels and Alternative Fueled Vehicles | 2014 |
| 314 | Standards for Safeguarding Customer Information | 2014 |
| 315 | Contact Lens Rule | 2015 |
| 316 | Rules Implementing the CAN-SPAM Act of 2003 | 2015 |
| 456 | Ophthalmic Practice Rules | 2015 |
| 603 | Fair Credit Reporting Act (FCRA) Rules—Definitions | 2015 |
| 610 | FCRA Rules—Free Annual File Disclosures | 2015 |
| 611 | FCRA Rules—Prohibition Against Circumventing Treatment as a Nationwide Consumer Reporting Agency | 2015 |
| 613 | FCRA Rules—Duration of Active Duty Alerts | 2015 |
| 614 | FCRA Rules—Appropriate Proof of Identity | 2015 |
| 698 | FCRA Rules—Summaries, Notices, and Forms | 2015 |
| 460 | Labeling and Advertising of Home Insulation | 2016 |
| 682 | FCRA Rules—Disposal of Consumer Report Information and Records | 2016 |

[FR Doc. 05–24613 Filed 12–28–05; 8:45 am]

BILLING CODE 6750–01–P

**DEPARTMENT OF ENERGY**

**Federal Energy Regulatory Commission**

**18 CFR Part 284**

**[Docket Nos. RM05–23–000 and AD04–11–000]**

## Rate Regulation of Certain Underground Storage Facilities

December 22, 2005.

**AGENCY:** Federal Energy Regulatory Commission, DOE.

**ACTION:** Notice of proposed rulemaking.

**SUMMARY:** The Federal Energy Regulatory Commission (Commission) is proposing to amend its regulations to establish criteria for obtaining market-based rates for storage services offered under part 284. First, the Commission is proposing to modify its market-power analysis to better reflect the competitive alternatives to storage. Second, pursuant to Title III, Subtitle B, section 312 of the Energy Policy Act of 2005, the Commission is proposing rules to implement new section 4(f) of the Natural Gas Act, to permit underground natural gas storage service providers that are unable to show that they lack market power to negotiate market-based rates in circumstances where market-based rates are in the public interest and necessary to encourage the construction of the storage capacity in the area needing storage services, and that customers are adequately protected. These revisions are intended to facilitate the development of new natural gas storage capacity while protecting customers.

**DATES:** Comments are due February 27, 2006.

**ADDRESSES:** Comments may be filed electronically via the eFiling link on the Commission's Web site at *http://www.ferc.gov*. Commenters unable to file comments electronically must send an original and 14 copies of their comments to: Federal Energy Regulatory Commission, Office of the Secretary, 888 First Street, NE., Washington, DC, 20426. Refer to the Comment Procedures section of the preamble for additional information on how to file comments.

**FOR FURTHER INFORMATION CONTACT:**

Sandra Delude, Office of the General Counsel, Federal Energy Regulatory Commission, 888 First Street, NE., Washington, DC 20426, (202) 502–8583.

Michael Henry, Office of General Counsel, Federal Energy Regulatory Commission, 888 First Street, NE., Washington, DC 20426, (202) 502–8532.

Ed Murrell, Office of Markets, Tariffs, and Rates, Federal Energy Regulatory Commission, 888 First Street, NE., Washington, DC 20426, (202) 502–8703.

Berne Mosley, Office of Energy Projects, Federal Energy Regulatory Commission, 888 First Street, NE., Washington, DC 20426, (202) 502–8625.

**SUPPLEMENTARY INFORMATION:**

### I. Introduction

1. On August 8, 2005, the Energy Policy Act of 2005 (EPAct 2005 or the Act) [1] was signed into law. Section 312 of EPAct 2005, adding a new section 4(f) to the Natural Gas Act (NGA),[2] permits the Commission to allow a natural gas storage service provider placing new facilities in service to negotiate market-based rates even if it is unable to show that it lacks market power if the Commission determines that market-based rates are in the public interest and necessary to encourage the construction of the storage capacity in the area needing storage services, and that customers are adequately protected.[3]

2. The enactment of EPAct 2005 adds momentum to efforts already underway at the Commission to adopt policy reforms that would encourage the development of new natural gas storage facilities while continuing to protect consumers from the exercise of market power. On September 30, 2004, the Commission issued a staff report that examined underground natural gas storage.[4] On October 21, 2004, the Commission held a public conference with representatives of the industry to discuss the Staff Storage Report and issues relevant to underground storage.[5] The Commission received oral and written comments in connection with the Staff Storage Report and conference.

3. After considering the conference comments, the current characteristics of the storage market, the nation's existing and projected storage capacity needs, and the new legislation, the Commission concludes that reform of its current pricing policies may be appropriate. The purpose of this reform is to ensure access to storage services on a nondiscriminatory basis at just and reasonable rates and ensure that sufficient storage capacity will be available to meet anticipated increases in market demand. To achieve these goals, the Commission is adopting a two-prong approach. First, this notice of proposed rulemaking (NOPR) proposes modifications to the Commission's market power analysis to permit the consideration of close substitutes to storage in defining the relevant product market. This will ensure that market-based rates are not denied because of an overly narrow definition of the relevant market. Second, the Commission is proposing regulations to implement section 312 of EPAct 2005, which permits qualifying storage providers to charge market-based rates for a new facility even when they cannot (or do not) demonstrate that they lack market power. The Commission seeks comment, among other things, on whether there are certain generic safeguards that will provide adequate customer protections for entities applying for market-based rates under new NGA section 4(f). It should be noted, however, that these two policy reforms do not require a ''sequential'' approach for a potential storage developer. Instead, where a prospective applicant believes that it can make a showing sufficient to satisfy the requirements of new NGA section 4(f), it need not submit a traditional market power analysis in support of its request for market rates. In reviewing the applicant's request for market-based rates under section 4(f), the Commission will presume that the applicant has market power for the purposes of ensuring that customers are adequately protected. Taken together, the intent of these reforms is to facilitate the expansion of gas storage capacity to, among other things, mitigate natural gas price volatility, while continuing to protect consumers from the exercise of market power.

### II. Background

#### *A. Changing Nature of Storage Services*

4. In Order No. 636, the Commission found that pipelines held a competitive advantage over other gas sellers, in part

[1] Energy Policy Act of 2005, Pub. L. No. 109–58, 119 Stat. 594 (2005).

[2] 15 U.S.C. 717, *et seq.* (2000).

[3] Energy Policy Act of 2005, Pub. L. 109–58, § 312, 119 Stat. 594, 688 (2005).

[4] *Current State of and Issues Concerning Underground Natural Gas Storage, FERC Staff Report*, Docket No. AD04–11–000 (Sept. 30, 2004) (Staff Storage Report).

[5] *State of the Natural Gas Industry Conference*, Docket No. PL04–17–000, October 21, 2004; *see* State of Natural Gas Industry Conference; Staff Report on Natural Gas Storage; Notice of Public Conference, 69 FR 59917 (Oct. 6, 2004) (summarizing the issues to be discussed at the conference).

because of the lack of access to storage services.[6] Therefore, the Commission amended § 284.1(a) of its regulations to define transportation to include storage. This required pipelines to offer their customers firm and interruptible storage on an open-access, contract basis. Since the 1992 issuance of Order No. 636, much has changed. Storage is now being used to support new services made possible by the unbundling of storage from transportation and by new market conditions arising from the Commission's restructuring efforts. In addition, traditional interstate natural gas pipelines are experiencing competition for contract storage customers from independent storage providers. Many new entities provide myriad service options, and natural gas customers are able to choose among competing sellers, often as supplements or alternatives to ''backstop'' long-term, firm transportation and storage services contracted at Commission-regulated rates.

5. The nature of the gas storage marketplace also has changed significantly over the last decade. Traditionally, local distribution companies (LDCs) contracted for firm storage service on a long-term basis, principally to meet peak winter heating needs. Thus, underground storage fields were typically designed to inject gas during the spring, summer, and fall, and then draw on the accumulated underground inventory to meet winter heating demands. This model is changing. Instead of relying primarily on firm, long-term gas supply or transportation service contracts, wholesale customers are increasingly relying on a portfolio of both long-term and short-term contracts to purchase, store and transport natural gas.[7] There is a growing use of storage volumes not only to meet traditional winter heating demand, but also to supply gas to meet daily, or even hourly, demand for gas-fired electric generation plants. Storage is also being used to ensure liquidity at market centers to help market participants capture short-term changes in the value of natural gas.

6. This fundamental shift in contract terms and load profile challenges longstanding operational and financial presumptions regarding storage service. Whereas a storage facility designed for one annual injection-withdrawal cycle is well suited to supply gas to meet winter heating demands, such a facility may be less than ideal in meeting the intermittent summer demand spikes associated with supplying gas to fuel electric generation plants. A storage facility capable of cycling working gas repeatedly throughout the year, using high deliverability and injection to fulfill daily, even hourly, swings in demand, such as salt cavern storage, is able to satisfy such load profiles.[8] However, electric generators are much less likely to sign traditional long-term firm contracts, but may be more interested in the type of flexible pricing proposals offered uniquely under market-based rates.[9]

### *B. Storage Capacity and Natural Gas Prices*

7. Regardless of whether a storage facility is operated on a traditional, annual injection-withdrawal cycle, or completes multiple cycles throughout a year, the fact that gas can be injected into a storage facility and then held in repose, to be called upon during periods of high demand, has a moderating influence on gas prices. As a physical hedge, customers can build up underground inventories during times of lower demand, and then rely on these supply stores to avoid paying high spot market gas prices. Among the key findings highlighted by the Staff Storage Report is that the ''continued commodity price volatility indicates that more storage may be appropriate'' and that storage ''may be the best way of managing gas commodity price, so the long-term adequacy of storage investment depends on how much price volatility customers consider 'acceptable.' '' [10] The last several years have seen a marked rise in the overall commodity cost of natural gas and sharp swings in gas prices. In view of the resulting adverse economic impacts, Commission policy should not discourage the development of additional storage capacity through overly narrow definitions of the relevant market. Furthermore, we should consider a range of customer protections in implementing our new authority under NGA section 4(f).

### *C. The Need for Additional Storage*

8. Currently, there are approximately 200 storage facilities subject to the Commission's jurisdiction, with an aggregate working gas capacity of approximately 2.5 Tcf. Estimates of total domestic working gas capacity (both subject to and exempt from NGA jurisdiction) range up to 4.7 Tcf.[11] Considering future storage needs of the United States and Canada together, the National Petroleum Council (NPC) estimates an additional 700 Bcf will be required by 2025.[12] Although current and projected storage development is keeping pace with aggregate national storage demands, underground storage development in some market areas, such as New England [13] and the Southwest, is not.[14]

9. In large part, a storage facility's utility is a function of its location. Gas-fired electric generation is anticipated to

[6] *Pipeline Service Obligations and Revisions to Regulations Governing Self-Implementing Transportation; and Regulation of Natural Gas Pipelines After Partial Wellhead Decontrol*, 57 FR 13267 (Apr. 16, 1992), III FERC Stats. & Regs. ¶ 30,939 at 30,425–427 (Apr. 8, 1992), *order on reh'g*, Order No. 636–A, 57 FR 36128 (Aug. 12, 1992), III FERC Stats. & Regs. ¶ 30,950 (Aug. 3, 1992), *order on reh'g*, Order No. 636–B, 57 FR 57911 (Dec. 8, 1992), 61 FERC ¶ 61,272 (1992), *notice of denial of reh'g*, 62 FERC ¶ 61,007 (1993), *aff'd in part and vacated and remanded in part, United Dist. Companies* v. *FERC*, 88 F.3d 1105 (D.C. Cir. 1996), *order on remand*, Order No. 636–C, 78 FERC ¶ 61,186 (1997).

[7] The development of a short-term market for gas services was addressed by the Commission in 2000, in its *Regulation of Short-Term Natural Gas Transportation Services and Regulation of Interstate Natural Gas Transportation Services*, Order No. 637, FERC Stats. & Regs. Regulations Preambles (July 1996—December 2000) ¶ 31,091 (Feb. 9, 2000), *order on reh'g*, Order No. 637–A, FERC Stats. & Regs. Regulations Preambles (July 1996–December 2000) ¶ 31,099 (May 19, 2000), *reh'g denied*, Order No. 637–B, 92 FERC ¶ 61,062 (2000), *aff'd in part and denied in part, Interstate Natural Gas Association of America* v. *FERC*, 285 F.3d 18 (D.C. Cir. 2002). In that proceeding, the Commission considered the consequences of the restructuring of the gas industry following Order No. 636, and found ''a short-term gas market that is robust, functioning, efficient, and effective.'' FERC Stats. & Regs. Regulations Preambles (July 1996–December 2000) ¶ 31,091 at 31,255 (Feb. 9, 2000) (quoting comments submitted by the New York Mercantile Exchange).

[8] The Commission has authorized a number of salt cavern storage facilities that have these operational characteristics. See, *e.g.*, *Pine Prairie Energy Center, LLC*, 109 FERC ¶ 61,215 (2004) (authorizing the construction and operation of a high deliverability salt-cavern storage facility capable of as many as 30 injection-withdrawal cycles a year at maximum injection and withdrawal rates).

[9] *See*, *e.g.*, Energy Information Administration, *The Challenge of Electric Power Restructuring for Fuel Suppliers*, at 54–56 (September 1998).

[10] Staff Storage Report, at 1 (Sept. 30, 2004).

[11] The Department of Energy's Energy Information Administration (EIA) reports that in 2002 working gas storage capacity varied between 4.4 and 4.7 Tcf, whereas the Department of Energy's Office of Fossil Energy reports that in 2003 there were 415 underground storage facilities with a working gas capacity of 3.9 Tcf. The Staff Storage Report considered the range of estimated aggregate existing working gas and concluded that the present working gas capacity is 3.5 Tcf, of which 2.5 Tcf is subject to NGA jurisdiction, and that by improving existing storage reservoirs (*i.e.*, by reengineering existing facilities to enhance efficiency, rather than by expanding cavern capacity), there is the potential to obtain another 200 to 500 Bcf. *See* Staff Storage Report at 7–10.

[12] *Balancing Natural Gas Policy—Fueling the Demands of a Growing Economy*, NPC, Volume II at 261 (2003).

[13] New England appears to have little geologic potential for the development of underground storage facilities.

[14] *See*, *e.g.*, Southwestern Gas Storage Technical Conference, Docket No. AD03–11–000, Transcript at 23, lines 10–14 (Aug. 26, 2003).

drive a significant portion of the growth in gas consumption. Electric demand is expected to grow along with population, and one region of recent and forecasted population growth is the desert Southwest.[15] Since electric generation requirements are more transient than steady-state demand, base-load infrastructure facilities may not be an ideal means to meet future electric needs. Storage projects, especially high-deliverability salt cavern facilities, may prove more adaptable than pipelines in supplying gas on an as-needed basis to match the fluctuations in the demand profile of electric generation facilities.

10. Over the last several years, there has been a revival of interest in expanding existing and building new marine terminal facilities to import liquefied natural gas (LNG). New storage projects are being developed to absorb the additional revaporized LNG imports. To date, most such activity has been in the states along the arc of the Gulf of Mexico. The natural gas production, gathering, processing, transportation, and storage infrastructure in this region is extensive. Storage project sponsors have been able to demonstrate that the competitive nature of the gas market in this region ensures that new storage entrants are unlikely to be able to exercise market power, and hence merit market-based rates for new storage services.[16] In contrast, in the Southwest there is no equivalent infrastructure in place. This is noteworthy because several new LNG terminals are planned for the Mexican states of Baja California, Sonora, and Sinaloa, and a significant portion of the LNG received in Mexico is expected to flow north for consumption in the United States, with the Southwest as a targeted market. Additional storage in the Southwest could facilitate the receipt and distribution of these new natural gas supplies.

11. The development of underground storage facilities is dictated (1) by geology, which determines the physical properties of prospective reservoirs, such as size and cushion gas requirements; (2) by access to supply; (3) by access to consuming markets; and (4) by access to pipelines capable of transporting additional volumes of stored gas. Once a suitable site is identified, whether new storage capacity will be built turns on matters of construction and operating costs, market demand and the environment. Severe, adverse and unavoidable environmental impacts may preclude construction in certain locations. Investors also may be reluctant to fund a new project because of unattractive risk/reward prospects due to regulatory pricing constraints. This NOPR seeks to ensure that the Commission's regulatory approach does not unnecessarily impede the development of needed storage projects.

12. For storage services used on a short-term or spot basis, cost-of-service rates designed on the basis of an annual working gas cycle may not match up with the market value of storage service during transient periods of peak demand. Cost-of-service rates are based on projections of annual revenue requirements and relatively constant levels of demand. However, in today's markets, wholesale customers are not always willing to enter into long-term storage contracts sufficient to assure the storage investors that their annual revenue requirements will be met. Storage services used on a short-term or spot basis often do not exhibit the level of demand assumed by cost-of-service rate design. Permitting storage operators to earn higher revenues from short-term services during peak demand periods or through other pricing mechanisms may make an investment in the project economically feasible. Therefore, the NOPR seeks to lead to increased storage capacity that could benefit customers while continuing to protect them from the exercise of market power.

## III. Discussion

13. This NOPR is proposing changes to our regulations to permit storage providers to secure market-based rates under certain circumstances, while at the same time seeking to protect customers against potential exercises of market power. First, we are proposing regulations permitting all companies with storage facilities to seek market-based rates through a showing that their storage operations do not have significant market power. We have re-examined our approach to analyzing market power so that our analysis of whether to permit market-based rates for storage services better reflects the current competitive realities of the storage market. Second, for new storage capacity related to a specific facility placed into service after August 8, 2005, we are proposing regulations under new NGA section 4(f) that will authorize market-based rates under certain circumstances. Under these regulations, storage operators will be required to propose measures to protect customers from the potential exercise of market power, and we solicit comment on various approaches that could be used as generic safeguards in providing such protection. A storage service provider may apply for market-based rates under either method by filing appropriate supporting data when it files its certificate application, or as part of its request for NGPA section 311 rate authorization, or in a request for declaratory order for authority to charge market-based rates, but in any case it cannot charge market-based rates until the Commission concludes that the storage applicant has established that it lacks significant market power[17] or that it will adopt adequate customer protections pursuant to new NGA section 4(f).

14. The Commission recognizes that the measures proposed herein will not guarantee the proliferation of new storage projects. For example, despite a perceived need for new storage in the Southwest, there have been proposals for new storage projects that have failed to go forward for reasons unrelated to rate treatment.[18] Nevertheless, the flexibility proposed herein may induce the development of new storage capacity that would otherwise not be built.

### *A. Market Power Analysis for Market-Based Rates*

15. The Commission evaluates requests to charge market-based rates for storage services under the analytical framework of its 1996 Alternative Rate Policy Statement (Policy Statement).[19] The Policy Statement establishes procedures for service providers to demonstrate that they lack significant market power, using criteria recognized by the courts and similar to those used

[15] For example, Arizona's population is expected to increase by 5.6 million by 2030. U.S. Census Bureau, Population Division, Interim Projections (April 2005).

[16] *See, e.g.*, *Caledonia Energy Partners, L.L.C.*, 111 FERC ¶ 61,095 (2005) and *Freebird Gas Storage, LLC*, 111 FERC ¶ 61,054 (2005) (approving new storage projects in the Gulf of Mexico area that qualified for market-based rates).

[17] *See Alternatives to Traditional Cost-of-Service Ratemaking for Natural Gas Pipelines*, 74 FERC ¶ 61,076 at 61,236 (1996), *reh'g and clarification denied*, 75 FERC ¶ 61,024 (1996), *petitions denied and dismissed, Burlington Resources Oil & Gas Co.* v. *FERC*, 172 F.3d 918 (D.C. Cir. 1998); *see also Association of Oil Pipe Lines* v. *FERC*, 83 F.3d 1424, 1442–43 (D.C. Cir. 1996).

[18] See, for example, *Desert Crossing Gas Storage and Transportation System LLC*, 98 FERC ¶ 61,277 (2002), a proposal that has stalled, apparently due to shortfalls in contractual commitments and environmental concerns, and *Copper Eagle Gas Storage L.L.C.*, 97 FERC ¶ 62,193 (2001) and 99 FERC ¶ 61,270 (2002), a proposal delayed due to expressions of concern by the State of Arizona legislature raised as a result of security and safety issues associated with the project's planned location near Luke Air Force Base.

[19] *Alternatives to Traditional Cost-of-Service Ratemaking for Natural Gas Pipelines and Regulation of Negotiated Transportation Services of Natural Gas Pipelines*, 74 FERC ¶ 61,076 (1996), *reh'g and clarification denied*, 75 FERC ¶ 61,024 (1996), *petitions denied and dismissed, Burlington Resources Oil & Gas Co.* v. *FERC*, 172 F.3d 918 (D.C. Cir. 1998).

by the Department of Justice and the Federal Trade Commission. Under the Policy Statement, an applicant seeking authority to charge market-based rates must demonstrate that it lacks significant market power, or has adopted conditions that sufficiently mitigate its market power.[20]

16. The first step in analyzing whether an applicant has significant market power involves defining the relevant market in terms of both product market and geographic market. Such markets are defined by identifying the specific products or services and the suppliers of those products or services that provide good alternatives to the applicant's products and services. A good alternative is one that is available soon enough, has a price that is low enough, and has a quality high enough to permit customers to substitute the alternative for the applicant's services.

17. The Commission's initial screening tool for significant market power is the Herfindahl-Hirschman Index (HHI), a formula that focuses on the relevant market's concentration as an indicator of the potential of an applicant to act together with other sellers to raise prices. In general, an HHI below 1,800 suggests limited market concentration with less potential for any participant to exercise significant market power. However, an HHI above 1,800 suggests a higher level of concentration, and will cause the Commission to increase its scrutiny of other factors such as the applicant's market share, ease of entry into the market, the relative size of the applicant's capacity, and/or the sustainability of a potential attempt by the applicant to exercise market power.[21]

18. Since 1996, over 40 storage service providers have sought market-based rates pursuant to the criteria in the Policy Statement. In the majority of these cases, the Commission found that the applicant lacked significant market power and approved market-based rates. In applying its market concentration and market share screens in these cases to date, the Commission has looked only to the availability of other storage alternatives (in the relevant geographic market), in assessing whether a storage provider can exercise significant market power. Using this analysis, the Commission has approved all requests for market-based rates where the applicant was located in the production area. Due to extensive storage infrastructure in these regions, the Commission has been able to find a lack of significant market power based on findings that HHIs in that geographic region are well below 1,800, and without intense scrutiny of other factors.[22]

19. On the other hand, storage markets in consuming regions, such as the Northeast portion of the United States, have fewer storage providers, and have certain providers with large market shares, resulting in HHI values sufficient to require a higher level of Commission scrutiny of factors beyond market concentration. Nevertheless, the Commission has approved requests in consuming areas of the Northeast by considering factors other than market concentration. For example, in *Avoca Natural Gas Storage*,[23] the Commission approved market-based rates despite an HHI for deliverability of 4,100 in the relevant New York/Pennsylvania market, specifically noting the small size of Avoca's market share and the apparent ease of entry into the market as factors mitigating the market concentration reflected in the HHI.[24]

20. However, in areas where there are truly only a limited number of storage service providers, the Commission's traditional analysis will likely result in a storage provider having high HHI values as well as relatively large market shares. For example, in 2002, Red Lake Gas Storage, L.P. (Red Lake) proposed to construct a new underground storage facility in Arizona, an area not currently served by underground gas storage, and sought approval to charge market-based rates. The Commission denied Red Lake's market-based rate request based on its determination that, if built, the market Red Lake would operate in would be extremely concentrated and it would have substantial market power.[25]

21. The Commission is concerned that its current approach to analyzing market power may be too limiting in some circumstances because it does not consider the fact that non-storage products and services in a properly defined geographic market may be good alternatives to storage services, and thus mitigate a storage provider's ability to exercise market power. For example, in today's natural gas markets, pipeline capacity that is unaffiliated with the storage provider may be a good alternative to the storage service being offered. A new entrant proposing to offer its storage services in an area already fully served by existing pipelines would offer customers in that market area new service options, which to some extent would compete with existing service providers. Any new independent storage capacity would be expected to lower the market concentration and increase available alternatives in such a market.

22. The Commission therefore believes that it is not appropriate to limit the relevant product market to services offered by competing storage facilities. Such a narrow definition may incorrectly indicate that the storage applicant can exercise significant market power when, in fact, such ability could be constrained by sufficient pipeline alternatives. The denial of market-based rate authority in these circumstances could harm customers by providing a disincentive to storage development, particularly in underserved areas, in situations where significant market power does not exist.

1. Modifications to Market-Based Rate Test

23. The Commission proposes to reform its market-power test for natural gas storage operators to more accurately reflect the competitive conditions in the market for gas storage services. The Commission believes it is appropriate to adopt a more expansive definition of the relevant product market for storage to explicitly include close substitutes for gas storage services. We will evaluate potential substitutes, such as available pipeline capacity, and local gas production or LNG terminals, on a case-by-case basis in the context of individual applications for market-based rates[26]

24. In order to show that a non-storage product or service such as

[20] The Policy Statement describes significant market power as the ability to withhold services in a relevant market in order to produce a significant price increase for a significant period of time. The Commission adopted 10 percent as its standard price change threshold but did not preclude parties from arguing for the adoption of a higher or lower threshold in individual cases. 74 FERC ¶ 61,076 at 61,232.

[21] *Id.*

[22] *See, e.g., Caledonia Energy Partners, L.L.C.*, 111 FERC ¶ 61, 095 (2005); *Egan Hub Partners, L.P.*, 99 FERC ¶ 61,269 (2002); *Egan Hub Partners, L.P.*, 95 FERC ¶ 61,395 (2001).

[23] 68 FERC ¶ 61,045 (1994).

[24] The Commission reached a similar result analyzing storage services in *Steuben Gas Storage Co.*, 72 FERC ¶ 61,102 (1994); *New York State Electric and Gas Corp.*, 81 FERC ¶ 61,020 (1997); *N.E. Hub Partners, L.P.*, 83 FERC ¶ 61,043 (1998); *Seneca Lake Storage, Inc.*, 98 FERC ¶ 61,163 (2002); and *Wyckoff Gas Storage Co., LLC*, 105 FERC ¶ 61,027 (2003).

[25] *Red Lake Gas Storage, L.P.*, 102 FERC ¶ 61,077, *reg'h denied*, 103 FERC ¶ 61,277 (2003).

[26] Historically, market area storage was often developed to provide an economic alternative to more expensive pipeline expansions. By design, market area storage service used available off-peak pipeline capacity to inject gas into storage and expanded pipeline capacity from the storage fields to markets to deliver incremental supplies during market peaks. Thus, storage plus limited pipeline expansions provided a good economical alternative to more expensive production-area-to-market-area pipeline expansions.

transportation is a good alternative, the storage applicant would need to meet the criteria set forth in the Commission's Policy Statement,[27] including a showing that the service is available. In addition, consistent with the Commission's current practice, capacity on pipeline systems owned or controlled by the applicant's affiliates should not be considered among the customers' alternatives. Rather, affiliated capacity will be included in the market share calculated for the applicant.[28]

25. We provide the following guidance regarding the types of products that may be close substitutes depending on the facts of a given case. As a general matter, competition to a storage provider can come from entities that have the ability to deliver gas in the same market as the storage facility. In producing areas, storage may compete with production or LNG supply, in addition to other storage facilities. In market areas, there may also be local production or LNG available. In addition, available pipeline capacity can function as a close substitute by delivering gas at peak times to compete with a storage provider. For these reasons, we will permit applicants to present evidence that both available pipeline capacity and local production/LNG supply in the geographic market area can reasonably be considered as alternative products to storage services.

26. In addition, firm capacity available through capacity release can be a good alternative in appropriate circumstances. Under the Commission's capacity release regulations, holders of firm capacity are free to release the capacity to other shippers, as well as to make bundled sales at alternate delivery points. Because of this flexibility, some portion of firm, contracted-for capacity may have a sufficiently elastic demand (a willingness to re-sell firm capacity when price rises) to serve as a good alternative to an applicant's storage service.

27. A determination of whether capacity release provides a close substitute will depend on the facts of a particular case. For example, to the extent an LDC or similar entity holds pipeline capacity that is needed to meet state-mandated service obligations for captive retail customers, the capacity holder may have a relatively inelastic demand that makes it unlikely that the LDC will release that capacity and therefore that increment of transportation capacity may not be considered a good alternative during peak periods. However, LDCs and marketers also serve industrial and other customers under interruptible contracts which might make that portion of the LDC's capacity a reasonable alternative.

28. Moreover, in some circumstances, an applicant may be able to show that even when firm capacity on a pipeline is reserved for captive customers, *e.g.*, residential and small commercial customers, potential product or service substitution in downstream markets can result in capacity becoming available to compete in upstream markets while still serving captive customers. Under the Commission's open-access program, competition in a downstream market may create competition in upstream markets, particularly due to Order No. 636's requirement that pipelines provide flexible receipt and delivery points and segmentation including backhaul. Thus, an LDC's ability to buy capacity from another pipeline or storage facility or to purchase gas in the downstream market may free it to release upstream capacity, to compete with storage in the upstream market. This ability to buy capacity from another pipeline or storage facility or buy gas in the market area is present in the large downstream markets in the United States including California, Chicago and the Northeast.

29. Take, for example, the California downstream market. Capacity held on Transwestern Pipeline Company, LLC (Transwestern) and El Paso Natural Gas Company (El Paso) could compete with a storage project located in a market upstream of California if California customers of these pipelines can buy gas from other sources in the downstream markets. This could free upstream capacity to compete with the upstream storage project. For example, Pacific Gas & Electric Company (PG&E) could buy gas from PG&E Gas Transmission, Northwest Corporation (PGT), Kern River Gas Transmission Company, an electricity generator in the California market, withdraw from its own storage, or purchase local production or regasified LNG to serve its captive or core customers. As a result, PG&E would be able to either release a portion of its firm capacity on El Paso, or nominate a secondary delivery at an upstream point to sell gas in the upstream market. As indicated above, whether capacity release in a given market would qualify as a close substitute under the Policy Statement would be determined on the facts of a given case.

30. Thus, based upon a proper showing, the Commission believes it would be appropriate for a storage applicant to include pipeline capacity that is used to serve captive customers if it is demonstrated that there are reasonable substitutes in the downstream market for serving load that would free up capacity in the upstream market that would compete with the storage project.

31. In summary, the Commission proposes to modify its current approach to analyzing market power to explicitly permit a storage applicant to propose to include other storage services, as well as non-storage products and services, including pipeline capacity and local production/LNG supply as described above, in its calculation of market concentration using the HHI and in its analysis of market share. The Commission believes that consideration of these alternative products will ensure that the Commission's market power analysis accurately reflects whether a storage applicant is able to exercise significant market power. The Commission requests comments on this approach as well as suggestions regarding other approaches for quantifying the amount of pipeline capacity that would compete with an applicant's storage services.

2. Filing Procedures and Periodic Review

32. Because most of the applications requesting market-based rates have been filed by storage providers, the Commission believes it would be beneficial to adopt specific procedures and filing requirements. Therefore, the Commission proposes to add a new subpart M to part 284 that requires, among other things, that applications by storage providers requesting market-based rates contain certain information. The Commission will continue its practice of approving market-based rate proposals on a prospective basis only.

33. Approval of blanket certificate authority to provide open access storage services at market-based rates will subject the storage service provider to the existing reporting requirements applicable to open-access service providers under § 284.13 of the Commission's regulations. The public disclosure of this information will enable the Commission and the industry to monitor the market-based storage transactions.

34. In a recent case, the Commission also required an applicant to file an updated market-power analysis within five years of the date of the Commission

[27] A good alternative is one that is available soon enough, has a price that is low enough, and has a quality high enough to permit customers to substitute the alternative for the applicant's services.

[28] *See* Policy Statement, 74 FERC ¶ 61,076 at 61,234 (1996).

order granting authority to charge market-based rates, and every five years thereafter.[29] The Commission believes that imposition of a periodic review is necessary to ensure that our grant of market-based rates to an applicant remains just and reasonable. Accordingly, the Commission proposes to add § 284.504 to the regulations to require storage applicants receiving market-based rates on the basis of a market power analysis to file updated market-power analyses within five years of the date of the Commission order granting authority to charge market-based rates, and every five years thereafter.

*B. Energy Policy Act of 2005*

35. Section 312 of EPAct 2005 adds new NGA section 4(f), which permits the Commission to authorize new natural gas storage projects (*i.e.*, projects placed in service after the passage of the Act) to provide service at market-based rates notwithstanding the fact that the applicant is unable to demonstrate that it lacks market power. New NGA section 4(f) requires that, to authorize market-based rates, the Commission must find that ''market-based rates are in the public interest and necessary to encourage the construction of the storage capacity in the area needing storage services'' and ''customers are adequately protected.'' The Act further requires that the Commission ''ensure that reasonable terms and conditions are in place to protect consumers'' and that the Commission ''review periodically whether the market-based rate is just, reasonable, and not unduly discriminatory or preferential.'' Intrastate pipelines also provide storage services, and new NGA section 4(f)(1) extends the market-based rate authority to intrastate pipelines subject to Commission authority under the Natural Gas Policy Act of 1978.[30] We discuss below the relevant aspects of new NGA section 4(f).

1. Storage Capacity Eligible for Market-Based Rates

36. Under the new NGA section 4(f), the Commission may authorize market-based rates ''for new storage capacity related to a specific facility placed in service after the date of enactment.'' Interstate natural gas pipelines asked the Commission at the October 12, 2005 Conference on State of Natural Gas Infrastructure to allow post-EPAct 2005 storage expansions of existing storage facilities to qualify under this provision.[31]

37. We believe that the phrase ''placed in service after the date of enactment'' modifies the term ''facility,'' not the term ''capacity,'' such that it is the facility which must be placed into service after August 8, 2005, rather than the storage capacity. While the statute does not define the term ''specific facility,'' the Commission proposes to interpret that term to consider a new cavern, reservoir or aquifer that is developed after August 8, 2005, as a facility qualifying for market-based rates under the Act. We believe that this interpretation is most consistent with the wording of new NGA section 4(f). We invite comments on alternative constructions of the Act. We also invite comments on how, if we construe the Act differently, the Commission may adequately protect other customers already receiving service under cost-based authorizations that pre-date the Commission's new NGA section 4(f) authority.

2. Market-Based Rates Are in the Public Interest and Necessary To Encourage the Construction of Storage Capacity in the Area Needing Storage Services

38. Before authorizing market-based rates under new NGA section 4(f), the Commission is required to determine that such rates are in the public interest and are necessary to encourage the construction of storage capacity in the area needing storage services. As discussed in the section below, applicants for authorization under section 4(f) will be required to demonstrate that customers will be adequately protected from any abuses of market power by the storage provider. Those customer protections will serve to ensure that the market-based rates charged are in the public interest.

39. The Commission proposes to require that the applicant bear the burden of showing that in its specific circumstances, market-based rates are necessary to encourage the construction of storage capacity and that storage services are needed in the area. The Commission invites comment on how a project applicant might make these showings. One possible way would be for the applicant to present evidence that it offered its capacity at cost-based rates through an open season and was unable to obtain sufficient long-term commitments at those cost-based rates.

3. Customer Protection

40. New NGA section 4(f) also requires that the Commission, as a prerequisite for granting market-based rate authority, determine that customers are adequately protected, and requires the Commission to ensure that reasonable terms and conditions are in place to protect them. The Commission proposes to allow the applicant to propose a relevant method of protecting customers.

41. In general, the Commission believes that customers will be better off if more storage infrastructure is built. Additional storage will benefit customers by increasing customer alternatives in a market and by mitigating price volatility.[32] Therefore, just as the Commission balances the benefits of proposed new construction against residual adverse impacts in determining need under the Certificate Policy Statement, the Commission proposes, in considering requests for market-based rate authority under new NGA section 4(f), to balance the obvious benefits of additional storage capacity in areas needing storage services against any adverse impacts which might arise from the potential exercise of market power by the storage provider. The Commission is concerned that to the extent unnecessary conditions are imposed, the additional storage infrastructure and the additional service options they create would be lost to the detriment of potential customers. Accordingly, the Commission seeks comment on methods of customer protection which will allow it to achieve the desired balance.

42. The appropriate method of customer protection may well vary depending on the facts and circumstances of individual project proposals. Thus, the Commission proposes to allow each applicant to propose a method of protecting customers best suited to its project. However, the Commission seeks comments on whether it would be beneficial to identify in this rulemaking certain acceptable approaches. Establishment of generic safeguards would facilitate the application process for NGA section 4(f) market-based rate authority. Each applicant, however, would retain the right to propose another method of protecting customers that might better fit the circumstances of

[29] *Liberty Gas Storage LLC*, 113 FERC ¶ 61,247 (2005).

[30] 15 U.S.C. 3301–3432 (2000). We note that the Commission has authorized Hinshaw pipelines to be treated the same as LDCs and we intend the same here. *See Certain Transportation, Sales and Assignments by Pipeline Companies not Subject to Commission Jurisdiction Under Section 1(c) of the Natural Gas Act, Order No. 63*, FERC Stats. & Regs. Regulations Preambles (1997–1981) ¶ 30,118 (Jan. 9, 1980).

[31] Comments of Scott Parker, President, Kinder Morgan Pipeline Group, State of the Natural Gas Infrastructure Conference, Docket No. AD05–14–000, Transcript at 120, lines 6–11 (Oct. 12, 2005).

[32] *See Pine Prairie Energy Center, LLC*, 109 FERC ¶ 61,215 at P 21 (2004).

its project. The Commission seeks suggestions of possible generic safeguards, as well as comments on the methods described below.

43. Entities with market power can exercise that power in two general areas: (1) The withholding of capacity; and (2) the extraction of monopoly rents. Thus, there are two approaches to protecting customers against the exercise of market power: (i) Conditions that limit the withholding of capacity and (ii) rate protections. We seek comment on whether there are generic safeguards in either method that would fairly balance the interests of consumers with the economic considerations relevant to financing new storage projects. As a general matter, we favor customer protections that are clear, easy to implement and oversee, and provide certainty to an applicant that is sufficient to support financing of a storage project.

44. One approach to customer protection is restrictions on withholding capacity. Market power can be exercised in those circumstances where a storage operator can withhold capacity from the market and raise prices. As long as storage capacity has not been withheld, ''the fact that shippers may at times bid up contract length likely reflects not an exercise of [the pipeline's] market power, but rather competition for scarce capacity.'' [33] We seek comment whether by ensuring that the storage operator has sold or made available to the market all of its capacity (and thus it is not withholding capacity), customers can be assured that market power is not being exercised by the storage service provider and that any increase in price is due to customers' demand for storage relative to the available supply.[34]

45. A difficulty in applying this standard is in defining when withholding should be found to be indicative of the exercise of market power. The Commission requests comment on how to apply a prohibition against withholding which balances the competing needs of the project sponsor to secure revenues adequate to attract necessary investment in new infrastructure and of the needs of customers to be protected from the abuse of market power. For example, would allowing the storage operator to set a reserve price provide an appropriate balance? Should the withholding prohibition apply all the time, or only during periods of peak demand for storage services? If the Commission were to allow such conditions, how should terms such as ''reserve price'' (a minimum price below which the storage operator is not required to sell capacity) and ''period of peak demand'' be defined? [35] Should a formal auction process under which the applicant is obligated to sell all capacity above a reserve price be considered?

46. Market power can be exercised in those circumstances where a storage operator can extract monopoly rents. Rate protections could take several forms. For example, rate caps could be designed to provide adequate customer protection while also supporting the financing of new storage projects. We seek comment on whether there are certain approaches to rate caps that could be adopted as a generic safeguard. As another example, the Commission could allow an applicant to establish a long-term (*e.g.*, 5–10 years) recourse rate that was cost-based and allow the applicant to negotiate contracts under market-based rates for shorter-term transactions. Would this approach be sufficient to protect customers without imposing an undue burden on the financing of new storage projects? Are there other cost-based rate designs or price cap methodologies that the Commission should consider to be generally acceptable if proposed by an applicant under this program?

4. Periodic Review

47. New NGA section 4(f) also requires that, for those entities granted market-based rates under this authority, the Commission ''review periodically whether the market-based rate is just, reasonable, and not unduly discriminatory or preferential.''

48. The Commission believes that to encourage the construction of new storage infrastructure, it must balance the benefits of the additional options new storage will bring to wholesale customers against the burdens of various forms of periodic review. Certain forms of periodic reviews may deter applicants from pursuing projects by introducing an unnecessary element of regulatory uncertainty. Should this happen, additional storage infrastructure and the additional service options it creates would be lost to the detriment of wholesale customers.

49. For market-based rates approved under NGA section 4(f), the Commission believes that the periodic review requirement should focus on the consumer protection safeguards adopted and ensure that these safeguards are working as intended and effectively preventing the storage provider from exercising significant market power. In the Commission's view, an effective approach of complying with the periodic review requirement is through regular monitoring and taking appropriate action under section 5 of the NGA either sua sponte or in response to a complaint. In cases where the consumer protection requirements imposed prohibit withholding, the Commission believes the existing § 284.13 posting requirements and storage reports combined with publicly available information regularly reviewed by Staff are sufficient for this purpose. These require that interstate storage operators post information about transactions and available capacity, and require the submission of quarterly index of customers' reports, and submission of semi-annual storage reports to the Commission. Those storage operators providing service only under NGPA section 311 are subject to fewer reporting requirements set forth in § 284.126, which requires an annual transaction report, and a semi-annual storage report.

50. Therefore, existing posting requirements on contractual obligations, including prices charged, and levels of available capacity should provide the information for monitoring whether storage operators have been exercising market power by withholding. This information is currently required of all open-access transporters and storage operators. Should concerns be raised about the practices of any storage provider charging market-based rates authorized by this Commission, this information along with more specific information required during the course of any necessary inquiry in a specific case will provide the Commission with the information needed to ensure that rates conform to the statutory requirement. Similarly, the Commission believes that the lesser burden imposed on NGPA section 311 storage providers, which are primarily regulated by state authorities, is also adequate for this purpose. The Commission believes this monitoring approach adequately complies with the periodic review requirement in NGA section 4(f).

51. The Commission requests comment on this approach and whether this type of periodic review should be enhanced by other reporting or transparency requirements. Comments

[33] *Process Gas Consumers Group* v. *FERC,* 292 F.3d 831, 837 (D.C. Cir. 2002).

[34] *Id.* (affirming Commission determination that prices determined through an uncapped bidding process were the product of competitive forces, not the exercise of market power.)

[35] The Commission has long recognized that open access pipelines are not required to sell capacity at rates below the maximum cost-based rate. This form of withholding balances the pipeline's right to compensatory rates against the customer protections required by the Natural Gas Act. However, under market-based rates there is no clear point at which these conflicting interests may be easily balanced.

should discuss with specificity how other requirements might be imposed without unduly deterring needed new storage infrastructure investment. Moreover, the Commission seeks comment on whether the applicant should be required to demonstrate the continued adequacy of its existing customer protections every five years. Additionally, in cases where the Commission adopts customer protection safeguards other than withholding, the Commission intends to consider whether additional reporting is necessary to effectively monitor and review whether the market-based rate is just and reasonable.

52. The Commission, therefore, proposes to revise its part 284 regulations as follows. New subpart M will be added, which addresses applications for market-based rates for storage. Within new subpart M, § 284.501, Applicability, explains which pipelines or storage service providers are eligible to apply for market-based rates under subpart M, § 284.502, Procedures for applying for market-based rates, explains what procedures must be followed for submitting an application. Section 284.503, Market-power determination, explains what must be submitted as part of an application for market-based rates, including what information must be submitted related to an applicant's market power. Section 284.504, Periodic review for market power determinations, requires the filing of updated market-power analyses by storage providers granted the authority to charge market-based rates every five years. Section 284.505, Market-based rates for storage providers without a market-power determination, explains what a storage service provider that does not seek a market-power determination must submit to the Commission in an application for market-based rates.

## IV. Information Collection Statement

53. The Office of Management and Budget (OMB) regulations require that OMB approve certain reporting, record keeping, and public disclosure (collections of information) imposed by an agency.[36] Accordingly, pursuant to OMB regulations, the Commission is providing notice of its proposed information collections to OMB for review under section 3507(d) of the Paperwork Reduction Act of 1995.[37]

54. The Commission identifies the information provided under Part 284 subpart M as contained in FERC–545, FERC–546 and FERC–549.

55. Comments are solicited on the Commission's need for this information, whether the information will have practical utility, the accuracy of the provided burden estimates, ways to enhance the quality, utility, and clarity of the information to be collected, and any suggested methods for minimizing respondent's burden, including the use of automated information techniques.

56. The burden estimates for complying with additional filing requirements of this rule pursuant to the procedures in proposed new sections 284.503 and 284.505 are set forth below. For the most part, the burden on applicants seeking market-based rates for open-access storage services will not be changed by this proposed rule. Since 1996, applications for authority to charge market-based rates have been filed under the Commission's procedures applicable to NGA section 7 initial rate determinations, NGA section 4 rate changes, or NGPA section 311 rate determinations under the Commission's existing data collection authorities. This rule codifies application procedures and filing requirements which are little changed from the process followed since 1996. Codification of filing requirements will allow applicants to know what information must be filed with such an application and should reduce the need for staff to send out follow-up data requests and respondents to file data responses. To the extent respondents seek market-based rate authority under the new NGA section 4(f) authorization process, also codified in these regulations, the burdens may be lower than if they had filed to seek authorization under the Commission's 1996 Policy Statement. On average, we expect the burden of making an application for authority to charge market-based rates under this proposed rule to be 350 hours.

57. Applicants granted market-based rate approval after the effective date of a final rule will also be required pursuant to proposed new § 284.504 to file an updated market power analysis once every five years. The burden of this requirement will be imposed on all who operate under market-based rate authorizations granted on the basis of a market power determination. On average, we expect the burden of filing an updated market power analysis under this proposed rule to be 350 hours, imposed once every five years.

58. Over the past several years the Commission has approved market-based rates for storage services at an average pace of about 4.5 per year. The Commission is issuing this proposed rule in hopes that more storage will be constructed and operated, especially in underserved areas. In reflection of this policy goal, the Commission estimates that up to 10 filings may be made in a typical year. While this estimate may be high, in light of recent experience, at worst the Commission is overestimating the burden.

| Data collection | Number of respondents | Number of responses per respondent | Hours per response | Total annual hours |
|---|---|---|---|---|
| FERC–545, FERC–546, or FERC–549 | 10 | 1 | 350 | 3,500 |

*Total Annual Hours for Collection:* 3,500 hours.

59. *Information Collection Costs:* The Commission seeks comments on the cost to comply with these requirements. It has projected the average annualized cost for all respondents to be $280,000 (3,500 hours x $80.00 per hour).

60. *Title:* Gas Pipeline Rates: Rate Change (FERC–545); Certificated Rate Filings: Gas Pipeline Rates (FERC–546); and Gas Pipeline Rates: NGPA Title III Transactions (FERC–549).

61. *Action:* Proposed Information Collection.

62. *OMB Control Nos.:* 1902–0154, 1902–0155 and 1902–0086

63. The applicant shall not be penalized for failure to respond to these collections of information unless the collections of information display valid OMB control numbers.

64. *Respondents:* Business or other for profit.

65. *Frequency of Responses:* On occasion.

66. *Necessity of Information:* On August 8, 2005, Congress enacted EPAct 2005. Section 312 of EPAct 2005 amends the NGA to insert a new section, 4(f), which allows the Commission to permit natural gas storage service providers authority to

[36] 5 CFR 1320.11 (2005).

[37] 44 U.S.C. 3507(d) (2000).

charge market-based rates, subject to conditions and requirements set forth in the statute. The Commission considers the issuance of these regulations necessary to implement this Congressional mandate and to encourage the development of new natural gas storage facilities. The proposed rule updates the Commission's market power analysis to better reflect the competitive alternatives to storage available in today's wholesale natural gas marketplace. These changes should ease the applicant's burden in showing that a Commission grant of market-based rate authority is appropriate, thus encouraging the construction and operation of needed new storage infrastructure. While the new requirement for respondents to file an update of its market power analysis imposes a modest new burden, this will allow the Commission to ensure that customers will be protected from abuse of market power. In addition, the proposed rule in implementing EPAct 2005 creates regulations that allow qualifying storage providers to seek authority to charge market-based rates when the providers cannot or do not demonstrate they lack market power. The proposed rule revises the requirements contained in 18 CFR Part 284 to add a new subpart M to require that applications by storage providers requesting market-based rates contain certain information including a method for protecting customers and a showing of why market-based rates are necessary to encourage storage services.

67. *Internal Review:* The Commission has assured itself, by means of internal review, that there is specific, objective support for the burden estimates associated with the information requirements. The Commission staff will review the data included in the application to determine whether the proposed rates are in the public interest as well as for general industry oversight. Evidence establishing that market-based rates are necessary to encourage the construction of storage capacity is sufficient to also demonstrate that market-based rates are in the public interest. The Commission staff will review periodically the transactional and operational information provided by those granted authority to charge market-based rates pursuant to NGA section 4(f) to determine ''whether the market-based rate is just, reasonable, and not unduly discriminatory or preferential.'' These requirements conform to the Commission's plan for efficient information collection, communication and management within the natural gas industry.

68. Interested persons may obtain information on the reporting requirements by contacting the following: Federal Energy Regulatory Commission, 888 First Street, NE, Washington, DC 20426 (Attention: Michael Miller, Office of the Executive Director, 202–502–8415, fax: 202–273–0873, e-mail: *michael.miller@ferc.gov*).

69. For submitting comments concerning the collection of information and the associated burden estimate(s) including suggestions for reducing this burden, please send your comments to the contact listed above and to the Office of Management and Budget, Room 10202 NEOB, 725 17th Street, NW., Washington, DC 20503 (Attention: Desk Officer for the Federal Energy Regulatory Commission, 202–395–4650, fax: 202–395–7285).

## V. Environmental Analysis

70. The Commission is required to prepare an Environmental Assessment or an Environmental Impact Statement for any action that may have a significant adverse effect on the human environment.[38] The Commission has categorically excluded certain actions from these requirements as not having a significant effect on the human environment.[39] The actions proposed to be taken here fall within categorical exclusions in the Commission's regulations for rules that are clarifying, corrective, or procedural, for information gathering, analysis, and dissemination, and for sales, exchange, and transportation of natural gas that requires no construction of facilities.[40] Therefore, an environmental review is unnecessary and has not been prepared in this rulemaking. We note that environmental review will be prepared in each proceeding in which an applicant requests authority to construct facilities that might become subject to the rate-setting requirements of this rule.

## VI. Regulatory Flexibility Act Certification

71. The Regulatory Flexibility Act of 1980 (RFA)[41] generally requires a description and analysis of the impact the proposed rule will have on small entities or a certification that the proposed rule will not have significant economic impact on a substantial number of small entities. However, the RFA does not define ''significant'' or ''substantial'' instead leaving it up to an agency to determine the impacts of its regulations on small entities. In determining the impacts, the RFA proposes that agencies consider alternatives that are less burdensome to small entities and an explanation of why an alternative was rejected. The RFA provides four examples of alternatives including tiering, classification and simplification, performance rather than design standards, and exemptions or waivers. The Small Business size classification standard for natural gas storage operators is that their revenues are not in excess of $6 million per year.[42] In the Commission's experience, it has found that the smallest entity applying for a market-based storage application had projected revenues that exceeded the SBA standard. Agencies are not required to make such an analysis if a rule would not have a significant adverse impact on a substantial number of small entities. The Commission does not believe that this proposed rule would have such an effect on small business entities, since the proposed amendments to our regulations would apply only to natural gas companies, most of which are not small businesses. However, should a small entity believe that this rule will have a significant impact on them, they may apply to the Commission for a waiver. Accordingly, pursuant to section 605(b) of the RFA, the Commission proposes to certify that the regulations proposed herein will not have a significant adverse impact on a substantial number of small entities.

## VII. Comment Procedures

72. The Commission invites interested persons to submit comments on the matters and issues proposed in this notice to be adopted, including any related matters or alternative proposals that commenters may wish to discuss. Comments are due February 27, 2006. Comments must refer to Docket Nos. RM05–23–000 and AD04–11–000, and must include the commenter's name, the organization they represent, if applicable, and their address in their comments. Comments may be filed either in electronic or paper format.

73. Comments may be filed electronically via the eFiling link on the Commission's Web site at *http://www.ferc.gov*. The Commission accepts most standard word processing formats and commenters may attach additional files with supporting information in

[38] Order No. 486, Regulations Implementing the National Environmental Policy Act, 52 FR 47897 (Dec. 17, 1987), FERC Stats. & Regs. Preambles 1986–1990 ¶ 30,783 (1987).

[39] 18 CFR 380.4 (2005).

[40] *See* 18 CFR 380.4(a)(2)(ii), 380.4(a)(5), 380.4(a)(27) (2005).

[41] 5 U.S.C. 601–612.

[42] *http://www.sba.gov/size/sizetable2002.html.*

certain other file formats. Commenters filing electronically do not need to make a paper filing. Commenters that are not able to file comments electronically must send an original and 14 copies of their comments to: Federal Energy Regulatory Commission, Office of the Secretary, 888 First Street, NE., Washington, DC 20426.

74. All comments will be placed in the Commission's public files and may be viewed, printed, or downloaded remotely as described in the Document Availability section below. Commenters on this proposal are not required to serve copies of their comments on other commenters.

**VIII. Document Availability**

75. In addition to publishing the full text of this document in the **Federal Register**, the Commission provides all interested persons an opportunity to view and/or print the contents of this document via the Internet through FERC's Home Page (*http://www.ferc.gov*) and in FERC's Public Reference Room during normal business hours (8:30 a.m. to 5 p.m. Eastern time) at 888 First Street, NE., Room 2A, Washington DC 20426.

76. From FERC's Home Page on the Internet, this information is available in the Commission's document management system, elibrary. The full text of this document is available on elibrary in PDF and Microsoft Word format for viewing, printing, and/or downloading. To access this document in elibrary, type the docket number excluding the last three digits of this document in the docket number field.

77. User assistance is available for elibrary and the FERC's website during normal business hours. For assistance, please contact FERC Online Support at 1–866–208–3676 (toll free) or 202–502–6652 (e-mail at *FERCOnlineSupport@ferc.gov*), or the Public Reference Room at 202–502–8371, TTY 202–502–8659 (e-mail at *public.referenceroom@ferc.gov.*

**List of Subjects in 18 CFR Part 284**

Continental shelf, Incorporation by reference, Natural gas, Reporting and recordkeeping requirements.

By direction of the Commission.

**Magalie R. Salas,**

*Secretary.*

In consideration of the foregoing, the Commission proposes to amend part 284, Chapter I, Title 18, Code of Federal Regulations, as set forth below.

## PART 284—CERTAIN SALES AND TRANSPORTATION OF NATURAL GAS UNDER THE NATURAL GAS POLICY ACT OF 1978 AND RELATED AUTHORITIES

1. The authority citation for part 284 continues to read as follows:

**Authority:** 15 U.S.C. 717–717w, 3301–3432; 42 U.S.C. 7101–7352; 43 U.S.C 1331–1356.

2. New subpart M is added to read as follows:

### Subpart M—Applications for Market-Based Rates for Storage

Sec.

284.501 Applicability.
284.502 Procedures for applying for market-based rates.
284.503 Market power determination.
284.504 Periodic review requirement for market power determinations.
284.505 Market-based rates for storage providers without a market-power determination.

**§ 284.501 Applicability.**

Any pipeline or storage service provider that provides or will provide service under subparts B, C, and G of this part, and that wishes to provide storage and storage-related services at market-based rates must conform to the requirements in subpart M.

**§ 284.502 Procedures for applying for market-based rates.**

(a) Applications for market-based rates may be filed with certificate applications. Service, notice, intervention, and protest procedures for such filings will conform with those applicable to the certificate application.

(b) With respect to applications not filed as part of certificate applications,

(1) Applicants providing service under subpart B or subpart G of this part must file a request for declaratory order and comply with the service and filing requirements of part 154 of this chapter. Interventions and protest to applications for market-based rates must be filed within 30 days of the application unless the notice issued by the Commission provides otherwise.

(2) Applicants providing service under subpart C of this part must file in accordance with the requirements of that subpart.

(c) An applicant cannot charge market-based rates under this subpart of this part until its application has been accepted by the Commission. Once accepted, the applicant can make the appropriate filing necessary to set its market-based rates into effect.

**§ 284.503 Market power determination.**

An applicant may apply for market-based rates by filing a request for a market power determination that complies with the following:

(a) The applicant must set forth its specific request and adequately demonstrate that it lacks market power in the market to be served, and must include an executive summary of its statement of position and a statement of material facts in addition to its complete statement of position. The statement of material facts must include citation to the supporting statements, exhibits, affidavits, and prepared testimony.

(b) The applicant must include with its application the following information:

(1) *Statement A—geographic market.* This statement must describe the geographic markets for storage services in which the applicant seeks to establish that it lacks significant market power. It must include the market related to the service for which it proposes to charge market-based rates. The statement must explain why the applicant's method for selecting the geographic markets is appropriate.

(2) *Statement B—product market.* This statement must identify the product market or markets for which the applicant seeks to establish that it lacks significant market power. The statement must explain why the particular product definition is appropriate.

(3) *Statement C—the applicant's facilities and services.* This statement must describe the applicant's own facilities and services, and those of all parent, subsidiary, or affiliated companies, in the relevant markets identified in Statements A and B in paragraphs (b) (1) and (2) of this section. The statement must include all pertinent data about the storage facilities and services.

(4) *Statement D—competitive alternatives.* This statement must describe available alternatives in competition with the applicant in the relevant markets and other competition constraining the applicant's rates in those markets. Such proposed alternatives may include other storage, local gas supply, LNG, and pipeline capacity. These alternatives must be shown to be reasonably available as a substitute in the area to be served soon enough, at a price low enough, and with a quality high enough to be a reasonable alternative to the applicant's services. Available capacity (transportation, storage, LNG,or production) owned or controlled by affiliates of the applicant in the relevant market shall be clearly and fully identified and may not be considered as alternatives competing

with the applicant. Rather, the capacity of an applicant's affiliates is to be included in the market share calculated for the applicant. To the extent available, the statement must include all pertinent data about storage or other alternatives and other constraining competition.

(5) *Statement E—potential competition.* This statement must describe potential competition in the relevant markets. To the extent available, the statement must include data about the potential competitors, including their costs, and their distance in miles from the applicant's facilities and major consuming markets. This statement must also describe any relevant barriers to entry and the applicant's assessment of whether ease of entry is an effective counter to attempts to exercise market power in the relevant markets.

(6) *Statement F—maps.* This statement must consist of maps showing the applicant's principal facilities, pipelines to which the applicant intends to interconnect and other pipelines within the area to be served, the direction of flow of each line, the location of the alternatives to the applicant's service offerings, including their distance in miles from the applicant's facility. The statement must include a general system map and maps by geographic markets. The information required by this statement may be on separate pages.

(7) *Statement G—market power measures.* This statement must set forth the calculation of the market concentration of the relevant markets using the Herfindahl-Hirschman Index. The statement must also set forth the applicant's market share, inclusive of affiliated service offerings, in the markets to be served. The statement must also set forth the calculation of other market power measures relied on by the applicant. The statement must include complete particulars about the applicant's calculations.

(8) *Statement H—other factors.* This statement must describe any other factors that bear on the issue of whether the applicant lacks significant market power in the relevant markets. The description must explain why those other factors are pertinent.

(9) *Statement I—prepared testimony.* This statement must include the proposed testimony in support of the application and will serve as the applicant's case-in-chief, if the Commission sets the application for hearing. The proposed witness must subscribe to the testimony and swear that all statements of fact contained in the proposed testimony are true and correct to the best of his or her knowledge, information, and belief.

**§ 284.504 Periodic review requirement for market power determinations.**

Applicants granted the authority to charge market-based rates under § 284.503 are required to file an updated market-power analysis within five years of the date of the Commission order granting authority to charge market-based rates, and every five years thereafter.

**§ 284.505 Market-based rates for storage providers without a market-power determination.**

(a) Any storage service provider seeking market-based rates for storage capacity, pursuant to the authority of Section 4(f) of the Natural Gas Act, related to a specific facility put into service after August 8, 2005, may apply for market-based rates by complying with the following requirements:

(1) The storage service provider must demonstrate that market-based rates are necessary to encourage the construction of the storage capacity in the area needing storage services; and

(2) The storage service provider must provide a means of protecting customers from the potential exercise of market power.

(b) Any storage service provider seeking market-based rates for storage capacity pursuant to this section will be presumed by the Commission to have market power.

[FR Doc. E5–8031 Filed 12–28–05; 8:45 am]

BILLING CODE 6717–01–P

## DEPARTMENT OF THE INTERIOR

## National Park Service

## 36 CFR Part 7

**RIN 1024–AD44**

## Cape Lookout National Seashore, Personal Watercraft Use

**AGENCY:** National Park Service, Interior.

**ACTION:** Proposed rule.

**SUMMARY:** The National Park Service (NPS) is proposing to designate areas where personal watercraft (PWC) may be used in Cape Lookout National Seashore, North Carolina. This proposed rule implements the provisions of the NPS general regulations authorizing park areas to allow the use of PWC by promulgating a special regulation. The NPS Management Policies 2001 directs individual parks to determine whether PWC use is appropriate for a specific park area based on an evaluation of that area's enabling legislation, resources and values, other visitor uses, and overall management objectives.

**DATES:** Comments must be received by February 27, 2006.

**ADDRESSES:** You may submit comments, identified by the number RIN 1024–AD44, by any of the following methods:

- Federal rulemaking portal: *http://www.regulations.gov* Follow the instructions for submitting comments.
- Mail or hand delivery to: Superintendent, Cape Lookout National Seashore, 131 Charles Street, Harkers Island, NC 28531.
- For additional information see ''Public Participation'' under **SUPPLEMENTARY INFORMATION** below.

**FOR FURTHER INFORMATION CONTACT:** Jerry Case, Regulations Program Manager, National Park Service, 1849 C Street, NW., Room 7241, Washington, DC 20240. Phone: (202) 208–4206. E-mail: *jerry_case@nps.gov.*

**SUPPLEMENTARY INFORMATION:**

### Background

*Additional Alternatives*

The information contained in this proposed rule supports implementation of portions of the preferred alternative in the Environmental Assessment (EA) published January 2005. The public should be aware that two other alternatives were presented in the EA, including a no-PWC alternative, and those alternatives should also be reviewed and considered when making comments on this proposed rule.

*Personal Watercraft Regulation*

On March 21, 2000, the NPS published a regulation (36 CFR 3.24) on the management of PWC use within all units of the national park system (65 FR 15077). This regulation prohibits PWC use in all national park units unless the NPS determines that this type of water-based recreational activity is appropriate for the specific park unit based on the legislation establishing that park, the park's resources and values, other visitor uses of the area, and overall management objectives. The regulation banned PWC use in all park units effective April 20, 2000, except for 21 parks, lakeshores, seashores, and recreation areas. The regulation established a 2-year grace period following the final rule publication to provide these 21 park units time to consider whether PWC use should be permitted to continue.

*Description of Cape Lookout National Seashore*

Cape Lookout National Seashore was established by Congress in 1966 to

conserve and preserve for public use and enjoyment the outstanding natural, cultural, and recreational values of a dynamic coastal barrier island environment for future generations. Cape Lookout National Seashore is a low, narrow, ribbon of sand located three miles off the mainland coast in the central coastal area of North Carolina and occupies more than 29,000 acres of land and water from Ocracoke Inlet on the northeast to Beaufort Inlet to the southwest. The national seashore consists of four main barrier islands (North Core Banks, Middle Core Banks, South Core Banks, and Shackleford Banks), which consist mostly of wide, bare beaches with low dunes covered by scattered grasses, flat grasslands bordered by dense vegetation, and large expanses of salt marsh alongside the sound. There are no road connections to the mainland or between the islands.

Coastal barrier islands, such as those located in Cape Lookout National Seashore, are unique land forms that provide protection for diverse aquatic habitats and serve as the mainland's first line of defense against the impacts of severe coastal storms and erosion. Located at the interface of land and sea, the dominant physical factors responsible for shaping coastal landforms are tidal range, wave energy, and sediment supply from rivers and older, pre-existing coastal sand bodies. Relative changes in local sea level also profoundly affect coastal barrier island diversity. Coastal barrier islands exhibit the following six characteristics:

- Subject to the impacts of coastal storms and sea level rise.
- Buffer the mainland from the impact of storms.
- Protect and maintain productive estuarine systems which support the nation's fishing and shellfishing industries.
- Consist primarily of unconsolidated sediments.
- Subject to wind, wave, and tidal energies.
- Include associated landward aquatic habitats which the non-wetland portion of the coastal barrier island protects from direct wave attack.

Coastal barrier islands protect the aquatic habitats between the barrier island and the mainland. Together with their adjacent wetland, marsh, estuarine, inlet, and nearshore water habitats, coastal barriers support a tremendous variety of organisms. Millions of fish, shellfish, birds, mammals, and other wildlife depend on barriers and their associated wetlands for vital feeding, spawning, nesting, nursery, and resting habitat.

Shackleford Banks contains the park's most extensive maritime forest as well as wild horses that have adapted to this environment over the centuries. The islands are an excellent place to see birds, particularly during spring and fall migrations. A number of tern species, egrets, herons, and shorebirds nest here. Loggerhead turtles climb the beaches at nesting time.

*Purpose of Cape Lookout National Seashore*

Cape Lookout National Seashore was authorized on March 10, 1966, by Public Law 89–366. Additional legislation, Public Law 93–477 (October 26, 1974), called for another 232-acre tract of land to be acquired, a review and recommendation of any suitable lands for wilderness designation, and authorized funding for land acquisition and essential public facilities.

The purpose of Cape Lookout National Seashore is to conserve and preserve for public use and enjoyment the outstanding natural, cultural, and recreational values of a dynamic coastal barrier island environment for future generations. The national seashore serves as both a refuge for wildlife and a pleasuring ground for the public, including developed visitor amenities.

The mission of Cape Lookout National Seashore is to:

- Conserve and preserve for the future the outstanding natural resources of a dynamic coastal barrier island system;
- Protect and interpret the significant cultural resources of past and contemporary maritime history;
- Provide for public education and enrichment through proactive interpretation and scientific study; and
- Provide for sustainable use of recreation resources and opportunities.

*Significance of Cape Lookout National Seashore*

Cape Lookout National Seashore is nationally recognized as an outstanding example of a dynamic natural coastal barrier island system. Cape Lookout is designated as a unit of the Carolinian-South Atlantic Biosphere Reserve, United Nations Educational, Scientific and Cultural Organizations (UNESCO) Man and the Biosphere Reserve Program. The park contains:

- Cultural resources rich in the maritime history of humankind's attempt to survive at the edge of the sea; and
- Critical habitat for endangered and threatened species and other unique wildlife including the legislatively protected wild horses of Shackleford Banks.

*Authority and Jurisdiction*

Under the National Park Service's Organic Act of 1916 (Organic Act) (16 U.S.C. 1 *et seq.*) Congress granted the NPS broad authority to regulate the use of the Federal areas known as national parks. In addition, the Organic Act (16 U.S.C. 3) allows the NPS, through the Secretary of the Interior, to ''make and publish such rules and regulations as he may deem necessary or proper for the use and management of the parks * * *.''

16 U.S.C. 1a–1 states, ''The authorization of activities shall be conducted in light of the high public value and integrity of the National Park System and shall not be exercised in derogation of the values and purposes for which these various areas have been established * * *.'' The NPS's regulatory authority over waters subject to the jurisdiction of the United States, including navigable waters and areas within their ordinary reach, is based upon the Property Clause and, as with the United States Coast Guard's authority, Commerce Clause of the U.S. Constitution. In regard to the NPS, Congress in 1976 directed the NPS to ''promulgate and enforce regulations concerning boating and other activities on or relating to waters within areas of the National Park System, including waters subject to the jurisdiction of the United States * * *.'' (16 U.S.C. 1a–2(h)). In 1996 the NPS published a final rule (61 FR 35136 (July 5, 1996)) amending 36 CFR 1.2(a)(3) to clarify its authority to regulate activities within the National Park System boundaries occurring on waters subject to the jurisdiction of the United States.

Motorboats and other watercraft have been in use at Cape Lookout National Seashore since the park was established in 1966. It is unknown when PWC use first began at the national seashore. In compliance with the settlement with the Bluewater Network, the national seashore closed to PWC use in April 2002. Personal watercraft are prohibited from launching or landing on any lands, boat ramps or docks within the boundaries of the national seashore. Personal watercraft may not be towed on trailers or carried on vehicles within national seashore boundaries except at the Harker's Island unit. This closure pertains to all of the barrier islands within the national seashore and the waters on the soundside of the islands within 150 feet of the mean low waterline. Outside of the park boundary, PWC use is governed by North Carolina PWC regulations. At present, the areas that were previously used by PWC

owners for landing are closed with signs.

Prior to the PWC closure, all areas of the park were open to PWC use. However, the majority of PWC use was concentrated in two areas of the national seashore that receive the heaviest visitor day-use in the park: (1) On the sound-side of South Core Banks at the Lighthouse (from the Lighthouse dock through Barden Inlet and Lookout Bight), and (2) the Shackleford Banks from Wade Shores west to Beaufort Inlet. Personal watercraft use of ocean beaches was rare due to rough surf conditions in the ocean and the hazard of beaching PWC in the ocean surf. Some PWC use occurred along North and South Core Banks from Portsmouth Village at the northern end of the national seashore to the lighthouse. This use was infrequent because of the prevalence of marshes and general lack of sound-side beaches along Core Banks, the large expanse of open water in Core Sound between the barrier islands and mainland North Carolina, and the low population of the adjacent communities in the ''down east'' as this portion of the national seashore is known locally. At public meetings held in October 2001, several participants indicated they had used their PWC to travel from locations such as Atlantic and Davis to the barrier islands. The popularity of Cape Lookout and Shackleford Banks where PWC use was concentrated can be attributed to the excellent soundside beaches in these areas, the attraction of the Cape Lookout lighthouse, traditional use of Shackleford Banks, their proximity to major inlets, and their close proximity to the three largest coastal population centers in Carteret County: Atlantic Beach, Morehead City, and Beaufort.

**Resource Protection and Public Use Issues**

*Cape Lookout National Seashore Environmental Assessment*

As a companion document to this proposed rule, NPS has issued the Cape Lookout National Seashore, Personal Watercraft Use Environmental Assessment. The EA was open for public review and comment from January 24, 2005 to February 24, 2005. Copies of the EA may be downloaded at *http://www.nps.gov/calo/pphtml/documents.html* or requested by telephoning (252) 728–2250. Mail inquiries should be directed to park headquarters: Cape Lookout National Seashore, 131 Charles Street, Harkers Island, NC 28531.

The purpose of the EA was to evaluate a range of alternatives and strategies for the management of PWC use at Cape Lookout National Seashore to ensure the protection of park resources and values while offering recreational opportunities as provided for in the National Seashore's enabling legislation, purpose, mission, and goals. The analysis assumed alternatives would be implemented beginning in 2003 and considered a 10-year period, from 2003 to 2013.

The EA evaluates three alternatives concerning the use of PWC at Cape Lookout National Seashore. The alternatives considered include:

- *No-Action Alternative:* Do not reinstate PWC use within the national seashore. No special regulation would be promulgated.
- *Alternative A:* Reinstate PWC use as previously managed under a special regulation.
- *Alternative B:* Reinstate PWC use under a special NPS regulation with additional management prescriptions.

Based on the analysis prepared for PWC use at Cape Lookout National Seashore, alternative B is considered the environmentally preferred alternative because it would best fulfill park responsibilities as trustee of sensitive habitat; ensure safe, healthful, productive, and aesthetically and culturally pleasing surroundings; and attain a wider range of beneficial uses of the environment without degradation, risk of health or safety, or other undesirable and unintended consequences.

This document proposes regulations to implement alternative B at Cape Lookout National Seashore.

The NPS will consider the comments received on this proposal, as well as the comments received on the EA when making a final determination. In the final rule, the NPS will implement alternative B as proposed, or choose a different alternative or combination of alternatives. Therefore, the public should review and consider the other alternatives contained in the EA when making comments on this proposed rule.

The following summarizes the predominant resource protection and public use issues associated with PWC use at Cape Lookout National Seashore. Each of these issues is analyzed in the *Cape Lookout National Seashore, Personal Watercraft Use Environmental Assessment.*

*Water Quality*

Most research on the effects of PWC on water quality focuses on the impacts of two-stroke engines generally, and it is assumed that any impacts caused by these engines also apply to two-stroke engines in PWC. Two-stroke engines (and PWC) discharge a gas-oil mixture into the water. Fuel used in PWC engines contains many hydrocarbons, including benzene, toluene, ethylbenzene, and xylene (collectively referred to as BTEX). Polycyclic aromatic hydrocarbons (PAHs) also are released from boat engines, including those in PWC. These compounds are not found appreciably in the unburned fuel mixture, but rather are products of combustion. Discharges of all these compounds—BTEX and PAHs—have potential adverse effects on aquatic life and human health if present at high enough concentrations. A common gasoline additive, methyl tertiary butyl ether (MTBE) is also released with the unburned portion of the gasoline. The PWC industry suggests that although some unburned fuel does enter the water, the fuel's gaseous state allows it to evaporate readily.

A typical conventional (i.e., carbureted) two-stroke PWC engine discharges as much as 30% of the unburned fuel mixture into the exhaust. At common fuel consumption rates, an average two-hour ride on a PWC may discharge three gallons (11.34 liters) of fuel into the water. The Bluewater Network states that PWC can discharge between three and four gallons of fuel over the same time period. However, the newer four-stroke technology can reduce these emissions to meet current regulatory standards for both water and air quality. The percentage of emissions of BTEX and MTBE compounds from four-stroke inboard or outboard motors is less than those from a two-stroke outboard engine or an existing two-stroke PWC engine.

Under the proposed regulation, based on alternative B in the EA, PWC use would be allowed within ten designated access areas, as identified in the ''Alternatives'' chapter of the EA and in the proposed rule. Personal watercraft within these access areas would be restricted to a perpendicular approach to the shoreline at flat-wake speed. Personal watercraft operation would be prohibited in park waters outside of the access areas. All state regulatory requirements would continue to apply. Because of the requirement for a perpendicular approach to the shoreline at flat-wake speed under this alternative, each PWC trip was assumed to be of only 5 minutes duration within park jurisdictional waters at 10% of full-throttle.

The results of the water quality analysis for PWC activity (table 24 of the EA) shows that for all discharged pollutants evaluated, the ecotoxicological threshold volumes estimated for 2003 and 2013 would be

well below volumes of water available at the study areas. Threshold volumes are less than an acre-foot, while water volumes in the park range from 3,890 to 6,810 acre-feet. Impacts on aquatic organisms would be expected to be negligible for all pollutants evaluated.

Threshold volumes for human health benchmarks of benzo(a)pyrene and benzene estimated for 2003 and 2013 are also less than an acre-foot, which is well below volumes of water available in the study areas. Impacts on human health would be expected to be negligible for all pollutants evaluated. Mixing, flushing, and the resulting dilution of park waters by adjacent waters would further reduce pollutant concentrations. Tidal currents at Beaufort and Ocracoke inlets reach speeds of up to 4 knots. Incoming tides more than double the available water volume. Outgoing tides transport soluble pollutants out of park waters to the Atlantic Ocean.

Overall, water quality impacts due to PWC emissions of organic pollutants in both 2003 and 2013 would be negligible.

Cumulative impacts associated with the implementation of alternative B under the proposed regulation would result from the cumulative activities taking place around Cape Lookout, including other motorized watercraft that use nearby waters and point and non-point sources of urban pollutants. Based on 2003 observations, on a typical peak use day, motorized watercraft are assumed to be distributed as follows: 565 at Shackleford Banks, 380 at South Core Banks, and 20 at North Core Banks. Assuming a 1.6% average annual increase (except for ferries), non-PWC numbers would increase by 2013 to 640 at Shackleford Banks, 430 at South Core Banks, and 24 at North Core Banks.

Threshold volumes calculated for all motorized watercraft are shown in table 25 of the EA. For all discharged pollutants evaluated, the ecotoxicological threshold volumes estimated for 2003 and 2013 would be well below volumes of water available in park jurisdictional waters in the study areas. Threshold volumes would be 37 acre-feet or less, while park jurisdictional water volumes range from 3,890 to 6,810 acre-feet. Impacts on aquatic organisms are expected to be negligible for all pollutants evaluated.

Threshold volumes for risks to human health from benzo(a)pyrene and benzene would also be well below the jurisdictional volumes in all areas in 2003 and 2013. Threshold volumes would be 44 acre-feet or less, while park jurisdictional water volumes range from 3,890 to 6,810 acre-feet. Risks to human health from benzo(a)pyrene and benzene, largely attributable to non-PWC use, would be expected to be negligible for all areas in 2003 and 2013.

Under the proposed regulation, water quality impacts from PWC use, based on ecotoxicological and human health benchmarks, would be negligible for all pollutants in all areas in both 2003 and 2013. Cumulative water quality impacts from all motorized watercraft under the proposed regulation, based on ecotoxicological benchmarks, would be negligible for all pollutants in all areas in both 2003 and 2013. Cumulative impacts on human health from all motorized watercraft would be negligible in 2003 and 2013. In 2013, cumulative water quality impacts from watercraft are expected to be lower than in 2003 due to reduced emission rates.

Therefore, implementation of this proposed regulation would not result in an impairment of water quality.

*Air Quality*

Personal watercraft emit various compounds that pollute the air. Up to one third of the fuel delivered to the typical two-stroke carbureted PWC engine is unburned and discharged; the lubricating oil is used once and is expelled as part of the exhaust; and the combustion process results in emissions of air pollutants such as volatile organic compounds (VOC), nitrogen oxides ($NO_X$), particulate matter (PM), and carbon monoxide (CO). Personal watercraft also emit fuel components such as PAH that are known to cause adverse health effects.

Even though PWC engine exhaust is usually routed below the waterline, a portion of the exhaust gases go into the air. These air pollutants may adversely impact park visitor and employee health as well as sensitive park resources. For example, in the presence of sunlight, VOC and $NO_X$ emissions combine to form ozone ($O_3$). $O_3$ causes respiratory problems in humans, including coughs, airway irritation, and chest pain during inhalations. $O_3$ is also toxic to sensitive species of vegetation. It causes visible foliar injury, decreases plant growth, and increases plant susceptibility to insects and disease. CO can affect humans as well. It interferes with the oxygen carrying capacity of blood, resulting in lack of oxygen to tissues. $NO_X$ and PM emissions associated with PWC use can degrade visibility. $NO_X$ can also contribute to acid deposition effects on plants, water, and soil. However, because emission estimates show that $NO_X$ from PWC are minimal (less than 5 tons per year), acid deposition effects attributable to PWC use are expected to be minimal.

*Impacts to human health.* Under the proposed regulation, special use areas would be identified where PWC could access Shackleford Banks, South Core Banks, and North Core Banks. Personal watercraft access could only access the beach in these areas and approach only perpendicular to the beach at flat-wake speeds. Personal watercraft use and access would be prohibited in all other areas of the national seashore. Safety and operating restrictions would be dictated by the North Carolina PWC regulations outlined under alternative A and additional NPS operating restrictions.

Human-health air quality impacts from the implementation of alternative B under this proposed regulation would be similar to those described for alternative A in the EA for 2003 and 2013 and would be negligible for CO, $PM_{10}$, HC, and $NO_X$. The human health risk from PAH would also be negligible in 2003 and 2013. The additional restrictions would not change the type of PWC in use, nor increase or decrease the number of PWC forecasted. Assuming that PWC are primarily used for transportation, the estimated daily duration of use of an individual PWC would decrease from 10 minutes under alternative A to 5 minutes under alternative B for both 2003 and 2013. Therefore, impacts would be negligible and at even lower levels than under alternative A.

Under the proposed regulation, cumulative impacts to human health from all boating use in the national seashore would not change from alternative A. Adverse impacts on human health from air pollutants in 2003 would be negligible for CO, $PM_{10}$, $NO_X$, and HC. In 2013, levels would remain negligible for CO, $PM_{10}$, $NO_X$, and HC.

Because no reduction in PWC use is expected, the proposed regulation would result in negligible air quality impacts on human health from PWC emissions, similar to alternative A. The additional management prescriptions would slightly reduce PWC emissions as compared with alternative A. Negligible adverse impacts from PWC emissions for CO, $PM_{10}$, HC, and $NO_X$ would occur in 2003 and 2013. The risk from PAH would also be negligible in 2003 and 2013.

Cumulative adverse impacts from PWC and other boating emissions at the national seashore would be the same as for alternative A. Adverse impacts on human health from air pollutants in 2003 would be negligible for CO, $PM_{10}$, $NO_X$, and HC. In 2013, levels would remain negligible for CO, $PM_{10}$, $NO_X$, and HC. Regional ozone emissions

would improve due to a reduction in HC emissions.

This proposed regulation would have negligible adverse impacts on human health air quality conditions, with future reductions in CO and HC emissions due to improved emission controls. The PWC contribution to emissions of HC is estimated to be less than 5% of the cumulative boating emissions in 2003 and 2013. All impacts would be long-term.

Therefore, implementation of this proposed regulation would not result in an impairment of air quality as it relates to human health.

*Impacts to air quality related values.* Under the proposed regulation, the annual number of PWC using the Cape Lookout National Seashore would be the same as alternative A. Additional management prescriptions under the proposed regulation, including the adoption of special use areas, would not affect PWC use numbers and potential future increases. The predicted emission levels and impacts of continued PWC use to air quality related values would be similar to those described for alternative A based on annual emission rates. Assuming that PWCs are primarily used for transportation, the estimated daily duration of PWC use of an individual PWC would decrease from 10 minutes under alternative A to 5 minutes under alternative B for both 2003 and 2013. Impacts on air quality related values from PWC in 2003 and 2013 would be negligible.

Cumulative adverse impacts on air quality related values at the national seashore in both 2003 and 2013 would be the same as described under alternative A. HC contribution to ozone-related air quality values would be negligible. In 2013, $NO_X$ emissions would slightly increase but would remain well below 50 tons per year, and there would be a reduction in HC emissions, resulting in a reduced contribution to ozone levels relative to 2003. Predicted year 2013 regional SUM06 ozone levels would be in the same range as year 2003; the impact would remain negligible.

The impacts of the proposed regulation on air quality related values would be the same as alternative A. Emissions of each pollutant would be substantially less than 50 tons per year in both 2003 and 2013. Negligible adverse impacts on air quality related values from PWC would occur in both 2003 and 2013. In both 2003 and 2013, adverse impacts from cumulative emissions from motorized boats and PWC would be negligible. This conclusion is based on calculated levels of pollutant emissions (table 31 of the EA), regional SUM06 values, and the lack of observed visibility impacts or ozone-related plant injury in the national seashore.

Therefore, implementation of this proposed regulation would not result in an impairment of air quality related values.

*Soundscapes*

The primary soundscape issue relative to PWC use is that other visitors may perceive the sound made by PWC as an intrusion or nuisance, thereby disrupting their experiences. This disruption is generally short-term because PWC are generally used as transportation to and from the islands. However, if PWC use changed from mostly transport to more extended recreational riding or if PWC use would increase and concentrate at popular visitation areas, such as Shackleford Banks and the lighthouse, related noise would become more of an issue, particularly during certain times of the day. Additionally, visitor sensitivity to PWC noise varies from kayakers (more sensitive) to swimmers at popular beaches (less sensitive).

Under the proposed regulation, PWC would be reinstated at Cape Lookout in specific locations. Personal watercraft would have access to areas that had been historically popular with PWC users; restrictions under this proposed regulation were based on safety reasons or the need to protect natural resources, particularly marshlands, which PWC avoid. However, all PWC operating within the special use areas defined under this proposed regulation would be required to operate at flat-wake speed within the national seashore's boundaries, which includes all waters from the mean low water line on the oceanside to 150 feet beyond the mean low water line. In addition, the area consisting predominantly of maritime forest along the soundside of Shackleford Banks would be closed to PWC use for safety reasons due to the high amount of visitor use in this area. Therefore, visitors using this area of Shackleford Banks would not experience adverse impacts because of the absence of PWC noise. Impacts throughout Shackleford Banks would be adverse, short-term, and minor.

The flat-wake speed restrictions would also lessen adverse impacts in the waters adjacent to the Cape Lookout lighthouse and the northern areas of the national seashore. Personal watercraft would be permitted access at specific locations along Core Sound, which were historically used by PWC in the past. Because most of the Core Sound consists of marshlands, PWC use along the South and North Core Banks was low before the ban, even during summer holiday weekends. For these reasons, noise impacts in the national seashore's northern reaches would be adverse, short-term, but negligible.

Combining PWC noise with other noise sources, such as other motorized vessels, beach activities, and off-road vehicle use, would increase the overall sound level at the national seashore. However, limiting PWC to flat-wake speed in all permitted areas of the national seashore would reduce adverse noise impacts considerably. Increased visitation expected to the Cape Lookout lighthouse would result in increased noise from both motorboats and PWC accessing this area. Therefore, cumulative impacts would be adverse, short-term, and negligible to minor under this proposed regulation, depending on location.

Personal watercraft would be permitted in areas historically preferred by PWC users under this proposed regulation, but only at flat-wake speed, resulting in adverse, short-term, negligible to minor impacts, depending on location. Cumulative impacts would be adverse, short-term, and negligible to minor under this proposed regulation, depending on location.

Therefore, implementation of this proposed regulation would not result in an impairment of the national seashore's soundscape.

*Shoreline and Submerged Aquatic Vegetation*

Personal watercraft are able to access areas that other types of watercraft may not, which may cause direct disturbance to vegetation. Indirect impact to shoreline vegetation may occur through trampling if operators disembark and engage in activities on shore. In addition, wakes created by PWC may affect shorelines through erosion by wave action.

Personal watercraft are very maneuverable and can operate well in waters less than a foot deep. Since most PWC rides begin in shallow water, the process of getting started from a standstill results in a substantial amount of water being directed towards the bottom at high velocity, potentially disturbing the sediment and submerged aquatic vegetation in shallow water areas. Disturbance of submerged aquatic vegetation beds diminishes their ecological value and productivity, affecting the entire ecosystem. As PWC are frequently operated in shallow areas in a repetitive manner, impacts on submerged aquatic vegetation beds can be severe. Potential direct impacts on submerged aquatic vegetation beds by

PWC can occur through collision, uprooting of submerged aquatic vegetation, and alteration of natural sediments. Potential indirect impacts of PWC use include adverse effects on the growth and health of submerged aquatic vegetation beds as a result of increased turbidity, decreased available sunlight, and deposition of suspended sediment on plants.

Under this proposed regulation, PWC use would be allowed within 10 designated access areas, as identified in the ''Alternatives'' chapter of the EA and the proposed rule language. Personal watercraft operation within these access areas would be restricted to a perpendicular approach to the shoreline at flat-wake speed. Personal watercraft would be prohibited in park waters outside of the access areas. All state regulatory requirements would continue to apply.

These 10 designated access areas were chosen to avoid marshes and high-congestion beach areas. Indirect impacts from PWC use to shoreline vegetation would occur but would be limited to the designated access areas and would therefore be negligible to minor and short-term. Impacts on shoreline vegetation associated with low salt marsh habitats would not occur, since PWC use would be restricted in these areas.

As PWC would be prohibited in park waters outside of the access areas, submerged aquatic vegetation beds in these areas would not be directly impacted by PWC use. Most of the access areas do not contain submerged aquatic vegetation beds, so PWC operation in these areas would have little potential to adversely impact this habitat. Additionally, the flat-wake speed restriction would minimize the potential for PWC to damage submerged aquatic vegetation beds through collision or uprooting and would reduce sediment resuspension and its detrimental effects. Reinstating PWC use in park waters and restricting their operation to a flat-wake perpendicular approach to the shoreline in designated access areas would result in negligible, indirect short- and long-term impacts on submerged aquatic vegetation beds.

Under this proposed regulation, PWC use would be limited to flat-wake speed within ten designated access areas, resulting in a negligible contribution to cumulative impacts on shoreline vegetation and submerged aquatic vegetation beds. Adverse direct and indirect cumulative effects associated with future increased use by motorized watercraft, including PWC, would be minor around landing areas and in tidal marsh habitats. Non-PWC motorized vessels would be able to operate throughout park waters, including areas where submerged aquatic vegetation beds occur. Potential direct impacts on submerged aquatic vegetation beds by all motorized vessels include propeller scarring, collision, uprooting, and sediment alteration. Potential indirect impacts include increased turbidity, decreased available sunlight, and suspended sediment deposition on submerged aquatic vegetation beds. However, both PWC and non-PWC trip lengths are short and speeds are low, which reduces the likelihood of adverse impacts. As PWC are outnumbered by non-PWC motorized vessels in park waters by more than 10 to 1, and most PWC use would not occur around submerged aquatic vegetation beds, nearly all impacts on shoreline vegetation and submerged aquatic vegetation beds would be attributed to non-PWC vessels.

Impacts on shoreline vegetation and submerged aquatic vegetation beds from all types of motorized vessels under this proposed regulation are expected to be minor, direct and indirect, and short- and long-term.

Reinstating PWC use in park waters and restricting their operation to a flat-wake perpendicular approach to the shoreline in designated access areas is expected to have negligible, indirect short-term impacts on submerged aquatic vegetation beds and negligible to minor short-term impacts on shoreline vegetation. Non-PWC vessels would still be able to access submerged aquatic vegetation beds under this alternative, and would be responsible for nearly all of the cumulative motorized vessel impacts on submerged aquatic vegetation beds. Motorized vessels, including PWC, are expected to have minor, direct and indirect, short- and long-term cumulative impacts on shoreline vegetation and submerged aquatic vegetation beds.

Therefore, implementation of this proposed rule would not result in an impairment of shoreline vegetation and submerged aquatic vegetation beds.

*Wildlife and Wildlife Habitat*

Some research suggests that PWC use affects wildlife by causing interruption of normal activities, alarm or flight, avoidance or degradation of habitat, and effects on reproductive success. This is thought to be a result of a combination of PWC speed, noise, and ability to access sensitive areas, especially in shallow-water depths.

Waterfowl and nesting birds are the most vulnerable to PWC. Fleeing a disturbance created by PWC may force birds to abandon eggs during crucial embryo development stages, prevent nest defense from predators, or contribute to stress and associated behavior changes. Potential impacts on sensitive species, such as loggerhead sea turtles and piping plover, are documented in the ''Threatened, Endangered, or Special Concern Species'' section.

Aquatic wildlife react to high levels of underwater noise in various ways, depending on the species, exposure period, intensities, and frequencies. Because of the way PWC are used, noise is usually produced at various intensities, and this continual change in loudness during normal use makes PWC-generated noise much more disturbing than the constant sounds of conventional motorboats. The sudden increases in noise levels can startle aquatic wildlife, triggering flight responses. In areas of high boating use, the energy cost to aquatic fauna due to noise-induced stresses could be significant, potentially affecting their survival.

Intense sounds can inflict pain and damage the sensory cells of the ears of mammalian species, and there is concern that similar sounds can impair hearing in aquatic wildlife species. One of the few direct studies on the impact of sound on fishes conducted under laboratory conditions found that when fish were subjected to high decibel levels for four hours, some sensory cells of the ears were damaged. This damage does not show up until a few days after exposure, and it is a short-term effect (regeneration did occur after a few days). Fish exposed to high decibel noise levels may have a short-term disadvantage in detecting predators and prey, potentially adversely affecting their survival. In addition, several species of fish in the drum family produce sounds as part of their mating behavior, so short-term hearing damage could negatively affect reproduction. Loggerhead turtle nesting has been shown to be negatively affected by loud noises such as close overflights by aircraft, but it is unknown at what frequencies and intensity noise might affect sea turtles or damage their hearing.

Although marine mammals show a diverse behavioral range that can obscure correlations between a specific behavior and the impact from noise, experts from around the country have voiced concern that PWC activity can have negative impacts on marine mammals, disturbing normal rest, feeding, social interactions, and causing flight. Toothed whales (including dolphins), produce sounds across a broad range of frequencies for

communication as well as echolocation, a process of creating an acoustic picture of their surroundings for the purpose of hunting and navigation. Watercraft engine noise can mask sounds that these animals might otherwise hear and use for critical life functions and can cause temporary hearing threshold shifts. Bottlenose dolphins exposed to less than an hour of continuous noise at 96 dB experienced a hearing threshold shift of 12 to 18 dB, which lasted hours after the noise terminated. A hearing threshold shift of this degree would substantially reduce a dolphin's echolocation and communication abilities. In 1998 C. Perry reviewed numerous scientific studies documenting increased swimming speed, avoidance, and increased respiration rates in whales and dolphins as a result of motorized watercraft noise. Whales have been observed to avoid man-made noise of 115 dB, and at higher frequencies, whales become frantic, their heart rates increase, and vocalization may cease.

Bottlenose dolphins and manatees may be present in the waters surrounding Cape Lookout National Seashore in the summer months and could be affected by PWC-generated noise. Kemp's ridley, loggerhead, leatherback, and green sea turtles occur in the waters around Cape Lookout National Seashore, and three of these species have nested on park beaches. In addition, more than 200 species of fish probably occur in the waters surrounding Cape Lookout National Seashore. Essential fish habitat occurs in the vicinity of Cape Lookout for a number of commercially and recreationally important fish (refer to the ''Aquatic Wildlife'' section in the ''Affected Environment'' chapter of the EA).

This proposed regulation would establish 10 special use areas to provide PWC access within the Cape Lookout National Seashore boundaries. Personal watercraft use would be prohibited in all other areas of the national seashore.

Implementing flat-wake zones in these areas would limit adverse impacts on wildlife within the national seashore boundaries. Impacts of PWC use associated with noise and potential collision impacts with aquatic wildlife would be minimized within national seashore boundaries with the reduction of allowable speeds and adverse noise fluctuations. Negligible, short-term adverse indirect impacts on terrestrial and aquatic wildlife and habitat are expected under the proposed regulation, as noise would be reduced with the implementation of the flat-wake zone.

In areas previously open to PWC use that are not within the 10 special use areas, adverse impacts would be eliminated or reduced as PWC noise would be eliminated from these areas and would not create a disturbance to wildlife and wildlife habitats. As PWC would be prohibited in park waters outside of the access areas, aquatic wildlife in these areas would not be impacted by PWC use. In the designated access areas, the PWC flat-wake speed requirement and perpendicular approach would not generate waves and would minimize sediment resuspension and damage to seagrass beds. The flat-wake speed limit would further minimize PWC engine noise and fuel emissions to water. Aquatic wildlife species inhabiting the shallow waters and seagrass beds within the access areas would experience negligible impacts from PWC operation.

Reinstating PWC use in park waters and restricting their operation to a flat-wake perpendicular approach to the shoreline in designated access areas is expected to have short-term, negligible, direct and indirect adverse impacts on aquatic wildlife species and habitats.

Under the proposed regulation, motorized vessels, including PWC, would have adverse impacts on aquatic wildlife and habitats in park waters, especially in high-use areas such as Shackleford Banks and Lookout Bight. Because non-PWC vessels vastly outnumber PWC in park waters, most cumulative boating impacts on aquatic wildlife would be caused by non-PWC vessels and would be similar to those described under alternative A. Restricting PWC to access areas and flat-wake speed would result in a negligible contribution to cumulative impacts. Cumulative impacts on dolphins, sea turtles, fish and shellfish, and their habitats from all motorized vessel use are expected to be short-term, minor, direct and indirect, and adverse.

Impacts on terrestrial wildlife, specifically birds, from all motorized vessel use are expected to be short-term, negligible to minor, direct and indirect, and adverse. Noise levels and the ability of other motorized watercraft users to access Shackleford Banks and Lookout Bight are expected to adversely affect terrestrial wildlife and shorebirds and waterfowl that may utilize the landing area and adjacent areas by causing alarm or flight responses. Effects are expected to be negligible to minor because these areas have a generally high level of visitation, regardless of PWC usage, and species sensitive to a high level of noise and human activity would probably not regularly use these areas or immediately adjacent habitats during high use periods.

The proposed regulation would minimize potential adverse impacts of PWC use in the 10 designated special use areas to negligible to minor, short-term, adverse impacts. The flat-wake requirements would reduce the level of PWC disturbance in the restricted areas and in nearby marshes. Reinstating PWC use in park waters and restricting their operation to a flat-wake perpendicular approach to the shoreline in designated access areas is expected to have short-term, negligible to minor, direct and indirect adverse impacts on terrestrial and aquatic wildlife species and habitats.

Cumulative impacts associated with an increase in all types of motorized vessel use are expected to be short-term, negligible to minor, direct and indirect, and adverse.

Therefore, implementation of this proposed regulation would not result in an impairment of terrestrial or aquatic wildlife or habitats in park waters.

*Threatened, Endangered, or Special Concern Species*

The Endangered Species Act (16 U.S.C. 1531 *et seq.*) mandates that all federal agencies consider the potential effects of their actions on species listed as threatened or endangered. If the NPS determines that an action may adversely affect a federally listed species, consultation with the U.S. Fish and Wildlife Service is required to ensure that the action will not jeopardize the species' continued existence or result in the destruction or adverse modification of critical habitat.

At Cape Lookout National Seashore it has been determined that none of the alternatives are likely to adversely affect any of the listed species that are known to occur or may occur within or adjacent to PWC activity within the boundaries of Cape Lookout National Seashore.

National Park Service Management Policies 2001 state that potential effects of agency actions will also be considered on state or locally listed species. The NPS is required to control access to critical habitat of such species, and to perpetuate the natural distribution and abundance of these species and the ecosystems upon which they depend.

The species at Cape Lookout National Seashore that have the potential to be affected by proposed PWC management alternatives include species that are known to inhabit or are likely to inhabit the area, plus those that could possibly be found in the area, but would most likely be transients or migrants.

Under the proposed regulation, PWC use would be allowed within ten designated access areas, as identified in the ''Alternatives'' chapter of the EA and in the proposed rule language. Personal watercraft operation within these access areas would be restricted to a perpendicular approach to the shoreline at flat-wake speed. Personal watercraft operation would be prohibited in park waters outside of the access areas. All state regulatory requirements would continue to apply. This proposed regulation may affect, but is not likely to adversely affect, federally listed threatened or endangered terrestrial species in the Cape Lookout National Seashore. Effects to federally listed threatened or endangered species associated with PWC use under the proposed regulation would be similar to those discussed under alternative A. However, the potential for impacts would be further minimized due to reduced levels of activity and use. Enforcement of flat-wake zones in the ten designated special use areas would decrease potential for near-shore noise associated with the PWC use to adversely affect protected species such as the piping plover.

As PWC operation would be prohibited in park waters outside of the access areas, aquatic special concern species in these areas would not be impacted by PWC use. Manatees and whales are not likely to be present in park waters during the summer when PWC use is high. Sea turtles and the Carolina diamondback terrapin are likely to be present in park waters during the summer. These turtles may be affected but are not likely to be adversely affected by PWC use under this proposed regulation, because most park waters would be off-limits to PWC and because the flat-wake speed restriction would further reduce the potential for collision, as well as reducing engine noise production and fuel discharge to water.

Reinstating PWC use in park waters and restricting their operation to a flat-wake perpendicular approach to the shoreline in designated access areas may affect but is not likely to adversely affect aquatic special concern species.

The majority of piping plover nests are located on North Core Banks, which accounted for 10 out of 14 nesting pairs in 2003. The majority of PWC activity occurs at Shackelford Banks and the lighthouse area at South Core Banks. Sea beach amaranth, piping plover nesting, and gull-billed tern nesting areas are all roped off where present. These species generally occur in areas of low PWC use, and PWC use may affect but is not likely to adversely affect these species.

Under this proposed regulation, PWC use would be limited to flat-wake speed within designated access areas, resulting in a negligible contribution to cumulative impacts. Non-PWC motorized vessels would be able to operate throughout park waters. Because manatees are not common in the area and northern right whales and humpback whales are not likely to occur in park waters in the summer, PWC and other motorized watercraft use may affect but are not likely to adversely affect these species. As previously mentioned, trip lengths for PWC and non-PWC are short, and due to the park's very shallow waters, operation of these vessels primarily consists of slow speed operation. Because of these factors, PWC and non-PWC vessel use may affect but is not likely to adversely affect sea turtles or Carolina diamondback terrapins. Non-PWC vessels outnumber PWC in park waters by more than 10 to 1, so any motorized vessel impacts on special concern species would be predominantly attributed to non-PWC vessels.

Due to the location of sensitive species and the areas of high PWC use and other motorized watercraft being typically separate, PWC use and other motorized watercraft may affect but are not likely to adversely affect special concern species.

Reinstating PWC use in park waters and restricting their operation to a flat-wake perpendicular approach to the shoreline in designated access areas may affect but are not likely to adversely affect manatees or whales in park waters, as these species are not present in areas or during seasons of peak PWC use. Personal watercraft and other motorized vessel use may affect but is not likely to adversely affect sea turtles or Carolina diamondback terrapins because of the slow vessel speeds and short trip lengths.

Therefore, implementation of this alternative would not result in an impairment of aquatic special concern species in park waters.

*Visitor Use and Experience*

Some research suggests that PWC use is viewed by some segments of the public as a nuisance due to their noise, speed, and overall environmental effects, while others believe that PWC are no different from other motorcraft and that people have a right to enjoy the sport. The primary concern involves changes in noise, pitch, and volume due to the way PWC are operated. Additionally, the sound of any watercraft can carry for long distances, especially on a calm day.

Under this proposed regulation, PWC would have access to 10 areas distributed along the entire national seashore. These areas include those that were historically popular with PWC users, such as the Cape Lookout lighthouse area and the west end of Shackleford Banks. Fifty-one miles of the seashore's sound side and 56 miles of the oceanside would be closed to PWC use. Five of a total of 10 miles (50%) of soundside sandy beaches would be available to PWC use.

*Impacts on PWC Users.* Personal watercraft users would experience beneficial impacts, as they would have access to those areas that were historically popular with PWC riders. Personal watercraft would be restricted from the marshlands along the Core Banks, which they avoided anyway for practical reasons. With the exception of the closed areas between the two toilet facilities on Shackleford Banks and those in the lighthouse area of South Core Banks, PWC would have access to many of the areas frequented by PWC prior to the ban. Therefore, benefits would be similar to having access to the entire national seashore, with the exception of the restricted area on Shackleford and near the lighthouse. Impacts would be beneficial, long-term, and minor since approximately only 1% of all visitors would be affected.

*Impacts on Other Boaters.* Personal watercraft would return to popular areas such as the Cape Lookout lighthouse area and Shackleford Banks, with the exception of the restricted section. Under this proposed regulation, PWC users would be required to operate at flat-wake speed within park waters, providing a beneficial impact to all boaters, particularly kayakers and canoeists, who would be most affected by wakes and noise. Canoeists and kayakers paddling the marshlands along the Core Sound would experience negligible impacts from reinstated PWC use because PWC would be prohibited in marshland areas. Although some complaints have been submitted regarding PWC use in these areas, PWC have primarily avoided marshlands in the past. Boaters in the national seashore's northern reaches would experience few, if any, impacts, given the extremely low PWC use in this area in the past. Paddlers and motor boat operators using the west end of Shackleford near Beaufort Inlet or the Cape Lookout lighthouse area would experience the most adverse impacts due to congestion in these popular areas. Other motorized boat users would also interact with PWC, and may

experience adverse impacts for similar reasons. However, motorized boat users may find PWC use more compatible with their type of recreation. Depending on location, overall impacts on other boaters would be adverse, short- and long-term, and negligible to minor due to flat-wake PWC speed restrictions in park waters.

*Impacts on Other Non-PWC Users.* As with other boaters, other non-PWC users would experience benefits from flat-wake speed restrictions under this proposed regulation. The PWC restricted area along Shackleford Banks between the two toilet facilities would provide beneficial impacts on visitors in this area. A stretch of maritime forest fronts the sound in this restricted area, providing a natural, pristine wilderness setting that is popular with campers (Wade's Shore is located near the eastern toilet facility on Shackleford). Restricting PWC in this area would enhance wilderness values there, including preservation of the primeval character of the wilderness, natural conditions (including lack of man-made noise), outstanding opportunities for solitude, and a primitive recreational experience. Because most non-fishing visitors come to the national seashore seeking a remote beach experience, restricted PWC use under this alternative would provide a beneficial impact to these visitors. In addition, 89% of respondents during public scoping indicated that they were in favor of banning PWC from the national seashore. Therefore, a majority of visitors may perceive PWC use as incompatible with their experience at Cape Lookout National Seashore and would prefer restricted access, even though PWC represented only a small percentage of national seashore visitors.

Restricting PWC within national seashore waters to flat-wake speed would also be particularly beneficial to swimmers, anglers, and beach combers, who may be more likely to experience adverse impacts from PWC use than motorized boat users.

Short-term impacts on all visitors would occur depending on the duration of exposure to PWC during a given visit. Visitors would also experience long-term impacts in that PWC use would have restricted access to the national seashore indefinitely into the future.

Cumulative impacts would be similar to those described under alternative A in the EA regarding an increase in motorized boaters accessing the Cape Lookout lighthouse starting in 2005. However, flat-wake speed restrictions under this alternative would provide a benefit in areas of increasing congestion. An increase in boaters in Barden Inlet, combined with restricted, reinstated PWC use, would result in an adverse impact in this area. Combining restricted PWC use with other motorized boat use would result in an adverse impact. Even though only 1% of visitors used PWC to access the national seashore in the past, impact levels would be moderate due to expected increases in visitation.

Reinstating PWC use with restricted access would result in beneficial impacts on PWC users, but adverse, short- and long-term impacts on other boaters (motorized and nonmotorized) ranging from negligible to moderate depending on location and type of boat use. Cumulative impacts would be adverse, short- and long-term, and negligible due to the historically low numbers of PWC at the national seashore and additional PWC use restrictions.

*Visitor Conflict and Safety*

Industry representatives report that PWC accidents decreased in some states in the late 1990s. The National Transportation Safety Board reported that in 1996 PWC represented 7.5% of state-registered recreational boats but accounted for 36% of recreational boating accidents. In the same year PWC operators accounted for more than 41% of the people injured in boating accidents. Personal watercraft operators accounted for approximately 85% of the persons injured in accidents studied in 1997. Only one PWC-related injury has been reported at Cape Lookout National Seashore, although much of the waters in the area are outside of park boundaries and many incidents likely are not reported to any agency at all. The park currently does little or no water-based enforcement, which would be necessary to better identify PWC/visitor safety issues. Very few PWC violations have been documented by national seashore staff.

Personal watercraft speeds, wakes, and operations near other users can pose hazards and conflicts, especially to canoeists and sea kayakers. Kayakers and canoeists have complained about PWC, and other visitors have complained that PWC use conflicts with swimming and other beach activities.

Under this proposed regulation, PWC would be reinstated in 10 special use areas throughout the national seashore. All visitors would experience beneficial impacts due to restricting PWC to flat-wake speeds when operating within national seashore boundaries, which should reduce conflicts between PWC and other users, particularly swimmers, anglers, and nonmotorized boaters. In addition, park staff would support the state boater education program; if such support resulted in more PWC operators enrolling in the program, all visitors could experience beneficial impacts as 83% of all PWC operators involved in accidents in North Carolina in 2003 had no formal PWC education.

*PWC Users/Swimmer Conflicts.* Personal watercraft would have access to two special use areas on the soundside of Shackleford Banks, with a non-use area in between where the maritime forest fronts the shoreline. This non-use area was chosen based on congestion and safety issues at the island, where swimming and beach activities (including overnight camping) are common. Therefore, by restricting PWC use in this popular area, impacts on swimmers would be reduced compared to reinstating PWC throughout the entire island, and impacts would be negligible to minor and of short duration in this area.

*PWC Users/Other Boater Conflicts.* Other motorized watercraft frequent the same areas, including the soundside of Shackleford Banks and the areas near the Cape Lookout lighthouse. Under this proposed regulation, PWC would have access to the same areas that are popular with boaters. The lighthouse area has been popular with PWC users in the past and continues to be a strong attraction for all national seashore visitors. Personal watercraft would be permitted to operate in three use areas in the Cape Lookout Bight area, being most restricted in the boat docking areas and beach near the lighthouse and the marshes near Catfish Point. A landing zone 300 feet north of the NPS ferry dock should help distribute PWC users accessing this area. Such restrictions, along with flat-wake speed requirements, should help alleviate potential conflicts with other boaters in this popular area and keep adverse impacts at minor levels.

Personal watercraft would not be permitted to use marshlands along the North and South Core Banks, where kayakers have complained about PWC use in marshes from Cape Lookout north to New Drum Inlet. Conflicts and potential for accidents would be minimal farther north, where PWC use has historically been extremely low.

*PWC Users/Other Visitor Conflicts.* Personal watercraft users would continue to conflict with other national seashore users, such as anglers and other beach recreationists. However, anglers fishing near the maritime forest on Shackleford Banks would benefit from PWC prohibition in this area. No accidents or injuries between PWC and non-PWC users have been reported to national seashore staff, although some

could have occurred, particularly outside of the park's jurisdiction, and not been reported.

Overall, reinstating PWC use in restricted areas would result in adverse, short- and long-term impacts that would vary from negligible in low-use areas, to minor in localized, high-use areas where a small number of visitors would be affected due the low numbers of PWC accessing the national seashore in restricted use areas, as well as the flat-wake speed restrictions called for under this proposed regulation.

Cumulative impacts would be similar to those described under alternative A in the EA, although PWC use would be restricted to specific areas of the national seashore. When combined with increased visitation expected throughout the national seashore, particularly at the Cape Lookout lighthouse area, reinstating PWC would increase potential for conflicts and accidents, particularly in localized areas. However, the restrictions on Shackleford and the Cape Lookout area would help alleviate such problems. Therefore, cumulative impacts would be adverse, long-term and vary from negligible to moderate depending on location.

Reinstating PWC use in restricted areas would result in adverse, short- and long-term impacts that would vary from negligible in low-use areas, to minor in localized, high-use areas where a small number of visitors would be affected due the low numbers of PWC accessing the national seashore in restricted use areas. Cumulative impacts would be adverse, long-term and vary from negligible to moderate depending on location.

*Cultural Resources*

The environment at Cape Lookout National Seashore has deterred extensive human settlement in the area. Human occupation of the Outer Banks region initially occurred over 3,000 years ago by a hunting-fishing-gathering people. The peoples of the Outer Banks are considered to be small groups of extended families, such as the situation among the living Algonkian hunters of the North. Earlier peoples may have used the area, but there is a strong likelihood that wave action or other natural processes removed any very early sites long ago.

Little is known about the nomadic hunters on the islands, and specific information about the area up to the time of Colonial English occupation is lacking. Shell midden sites on the Shackleford Banks and at Cape Lookout are the only remains of early human occupation. However, these sites (most of which are outside the national seashore's jurisdiction) have been reduced to almost unintelligible remains.

Cape Lookout National Recreation Area has 36 recorded archeological sites. These sites are difficult to monitor and protect due to the changing landscape of the barrier islands. Shell middens were found on the islands in the past, but most have been washed away by storms. None of the aboriginal sites currently known to exist within the national seashore were felt to be culturally and scientifically significant enough to justify their nomination to the National Historic Register.

Of the 36 recorded archeological sites, some could potentially be impacted by PWC use at Cape Lookout. The majority of the sites exist on Shackleford Banks, primarily in the salt marshes; some are located on small, marshy islands adjacent to Shackleford. Little evidence of these sites remains due to advanced stages of erosion and other environmental factors. The sites have become damaged from overwash or are submerged at high tide, and only erosional remnants remain. Severe erosion and movement of the land mass have almost obliterated several sites. Some of the sites are covered with thick vegetation, obscuring portions of the site from view. One site has been affected by past use of the area by sheep and goats, to the extent that little evidence of the site remains intact. According to park staff, looting and vandalism of cultural resources is not a substantial problem.

Under this proposed regulation, PWC users would have access to specific locations within the national seashore. When riding within NPS jurisdiction, PWC would be required to operate perpendicular to the shore and at flat-wake speed. Therefore, impacts on archeological sites from wave action would be greatly minimized. In addition, very few PWC have historically used the national seashore, and most would not operate in salt marsh areas where many archeological sites are located, further reducing the potential for adverse impact. Therefore, no negligible long-term, adverse impacts from PWC wave action would be expected.

Potential impacts resulting from vandalism and illegal collection would be similar to those expected under alternative A. However, the PWC landing restrictions on Shackleford and Cape Lookout would prevent PWC from landing in areas with archeological sites. Although PWC users could land in the designated areas and walk to some sites, many are submerged or located in salt marshes on small satellite islands, which are difficult to access by foot or PWC. Other sites are obscured by thick vegetation and difficult to identify. Therefore, impacts from vandalism and looting (which have historically been insubstantial) are expected to be adverse, long-term, but negligible.

Impacts from other boaters and visitors would be combined with impacts from PWC users. However, impacts from vandalism and illegal collecting would be negligible due to the difficulty in identifying these sites, as described above. Adverse effects due to wave action from boats would continue to impact aboriginal sites, but would not be appreciably augmented by waves from PWC use due to the flat-wake speed and perpendicular approach restrictions described under this proposed regulation. Wild horses would continue to impact archeological sites as described under alternative A. Past use of the area by sheep and goats could have also adversely impacted these sites. Erosion due to natural causes would continue to result in the most damaging impacts on archeological sites. Therefore, cumulative impacts resulting from vandalism, illegal collecting, waves from boats, and wild horses would be adverse, long-term, and negligible.

Restricting areas of use and requiring PWC to operate perpendicular to the shore and at flat-wake speed within the national seashore's jurisdiction would minimize impacts on archaeological resources from wave action. Restricting areas of use would also minimize impacts resulting from vandalism and illegal collecting. Cumulative impacts would be adverse, long-term, and negligible.

Therefore, implementation of this proposed regulation would not result in an impairment of cultural resources.

**The Proposed Rule**

Under this NPRM, which is based on the preferred alternative, alternative B, a special regulation at 36 CFR 7.49 would reinstate PWC use at the national seashore. Under the proposed rule, special use areas would be identified where PWC could access certain sections of Shackleford Banks, South Core Banks, and North Core Banks. Personal watercraft would be prohibited in all other areas of the national seashore, and PWC would not be allowed to beach on the oceanside. Safety and operating restrictions would be dictated by the North Carolina PWC regulations outlined under alternative A and additional NPS operating restrictions.

The state of North Carolina ceded legal jurisdiction to the NPS for all land

and waters from the mean low water on the oceanside to 150 feet from the mean low water mark on the soundside. Waters beyond this 150 feet boundary within Back Sound and beyond the legislated boundary along Core Sound are managed by the state of North Carolina. National Park Service legal jurisdiction on the oceanside of Shackleford Banks, South Core Banks, and North Core Banks is to the mean low water mark.

*Special Use Areas.* Ten special use areas would provide for PWC access within Cape Lookout National Seashore boundaries. Personal watercraft would be allowed to access these areas on North Core Banks, South Core Banks (including Cape Lookout), and Shackleford Banks by remaining perpendicular to shore and operating at flat-wake speed. Under the proposed rule, PWC use would not be authorized for recreational use parallel to the shoreline, but only for access to those areas identified below specifically for landing purposes. In all cases, PWC would have access to the sound side of the barrier islands only. No PWC access to the seashore's ocean side would be permitted. The ten special use areas identified in the proposed rule include the following:

1. North Core Banks

- Ocracoke Inlet Access—Wallace Channel dock to the demarcation line in Ocracoke Inlet, near Milepost 1.
- Milepost 11B Access—Existing sound-side dock at Mile post 11B approximately 4 miles north of Long Point.
- Long Point Access—Ferry landing at Long Point cabin area (formerly called the Morris Marina Kabin Kamp) near Milepost 16.
- Old Drum Inlet Access—Soundside beach near Milepost 19 (as designated by signs), approximately ½ mile north of Old Drum inlet (adjacent to the cross-over route) encompassing approximately 50 feet.

2. South Core Banks

- New Drum Inlet Access—Sound-side beach near Milepost 23 (as designated by signs), approximately ¼ mile long, beginning approximately ½ mile south of New Drum Inlet.
- Great Island Access—Carly Dock at the Great Island cabin area (formerly called the Alger Willis Fish Camp) near Milepost 30 (noted as South Core Banks-Great Island on map).

3. Cape Lookout

- Lighthouse Area North Access—A zone 300 feet north of the NPS dock at the lighthouse ferry dock near Milepost 41.
- Lighthouse Area South Access—Sound-side beach 100 feet south of the ''summer kitchen'' to 200 feet north of the Cape Lookout Environmental Education Center Dock.
- Power Squadron Spit Access—Sound-side beach at Power Squadron Spit across from rock jetty to end of the spit.

4. Shackleford Banks

- Shackleford West End Access—Soundside beach at Shackleford Banks from Whale Creek west to Beaufort Inlet, except the area between the Wade Shores toilet facility and the passenger ferry dock.

*Access and Wake Restrictions.* Within these special use areas, all PWC would be required to remain perpendicular to shore and operate at flat-wake speed that would result in no visible wake within park waters.

*Equipment and Emissions.* As noted in the EA, the Environmental Protection Agency promulgated a rule to control exhaust emissions from new marine engines, including outboards and PWC. Emission controls provide for increasingly stricter standards beginning in model year 1999 (EPA 1996a, 1997). Under this alternative, it is assumed that PWC two-stoke engines would be converted to cleaner direct-injected or four-stroke engines in accordance with the Environmental Protection Agency's assumptions (40 CFR parts 89–91, ''Air Pollution Control; Gasoline Spark-Ignition and Spark-Ignition Engines, Exemptions; Rule, 1996). This proposed rule would not accelerate this conversion from two-stroke to four-stroke engines for PWC.

*Visitor Education.* Cape Lookout park staff would support the state boater education program by annually outlining state and park PWC regulations within park brochures such as the park newspaper. Park staff would educate visitors about PWC regulations in park and state waters to help them understand the differences between park regulations and PWC regulations for other local jurisdictions along the Outer Banks.

*Cooperation with Local Entities.* The park would work with local and state governments to encourage consistent PWC user behavior within state waters adjacent to park PWC special use areas. The park would like to encourage the state to define a PWC use zone in state waters adjacent to Cape Lookout National Seashore that would encourage flat-wake and perpendicular access to the shore.

**Compliance With Other Laws**

*Regulatory Planning and Review (Executive Order 12866)*

This document is not a significant rule and has not been reviewed by the Office of Management and Budget under Executive Order 12866.

(1) This rule will not have an effect of $100 million or more on the economy. It will not adversely affect in a material way the economy, productivity, competition, jobs, the environment, public health or safety, or State, local, or tribal governments or communities. The NPS has completed the report ''Economic Analysis of Personal Watercraft Regulations in Cape Lookout National Seashore'' (MACTEC Engineering, December 2005). This document may be viewed on the park's Web site at: *http://www.nps.gov/calo/pphtml/documents.html.*

(2) This rule will not create a serious inconsistency or otherwise interfere with an action taken or planned by another agency. Actions taken under this rule will not interfere with other agencies or local government plans, policies or controls. This rule is an agency specific rule.

(3) This rule does not alter the budgetary effects of entitlements, grants, user fees, or loan programs or the rights or obligations of their recipients. This rule will have no effects on entitlements, grants, user fees, or loan programs or the rights or obligations of their recipients. No grants or other forms of monetary supplements are involved.

(4) This rule does not raise novel legal or policy issues. This rule is one of the special regulations being issued for managing PWC use in National Park Units. The NPS published general regulations (36 CFR 3.24) in March 2000, requiring individual park areas to adopt special regulations to authorize PWC use. The implementation of the requirement of the general regulation continues to generate interest and discussion from the public concerning the overall effect of authorizing PWC use and NPS policy and park management.

*Regulatory Flexibility Act*

The Department of the Interior certifies that this rulemaking will not have a significant economic effect on a substantial number of small entities under the Regulatory Flexibility Act (5 U.S.C. 601 *et seq.*). This certification is based on a report entitled ''Economic Analysis of Personal Watercraft Regulations in Cape Lookout National Seashore'' (MACTEC Engineering, December 2005). This document may be

viewed on the park's Web site at: *http://www.nps.gov/calo/pphtml/documents.html.*

*Small Business Regulatory Enforcement Fairness Act (SBREFA)*

This rule is not a major rule under 5 U.S.C. 804(2), the Small Business Regulatory Enforcement Fairness Act. This proposed rule:

a. Does not have an annual effect on the economy of $100 million or more.

b. Will not cause a major increase in costs or prices for consumers, individual industries, Federal, State, or local government agencies, or geographic regions.

c. Does not have significant adverse effects on competition, employment, investment, productivity, innovation, or the ability of U.S.-based enterprises to compete with foreign-based enterprises.

*Unfunded Mandates Reform Act*

This rule does not impose an unfunded mandate on State, local, or tribal governments or the private sector of more than $100 million per year. The rule does not have a significant or unique effect on State, local or tribal governments or the private sector. This rule is an agency specific rule and does not impose any other requirements on other agencies, governments, or the private sector.

*Takings (Executive Order 12630)*

In accordance with Executive Order 12630, the rule does not have significant takings implications. A taking implication assessment is not required. No taking of personal property will occur as a result of this rule.

*Federalism (Executive Order 13132)*

In accordance with Executive Order 13132, the rule does not have sufficient federalism implications to warrant the preparation of a Federalism Assessment. This proposed rule only affects use of NPS administered lands and waters. It has no outside effects on other areas by allowing PWC use in specific areas of the park.

*Civil Justice Reform (Executive Order 12988)*

In accordance with Executive Order 12988, the Office of the Solicitor has determined that this rule does not unduly burden the judicial system and meets the requirements of sections 3(a) and 3(b)(2) of the Order.

*Paperwork Reduction Act*

This regulation does not require an information collection from 10 or more parties and a submission under the Paperwork Reduction Act is not required. An OMB Form 83-I is not required.

*National Environmental Policy Act*

The NPS has analyzed this rule in accordance with the criteria of the National Environmental Policy Act and has prepared an EA. The EA was available for public review and comment from January 24, 2005, to February 24, 2005. Copies of the EA may be downloaded at *http://www.nps.gov/calo/pphtml/documents.html* or requested by telephoning (252) 728–2250. Mail inquiries should be directed to park headquarters: Cape Lookout National Seashore, 131 Charles Street, Harkers Island, NC 28531.

*Government-to-Government Relationship With Tribes*

In accordance with the President's memorandum of April 29, 1994, ''Government to Government Relations with Native American Tribal Governments'' (59 FR 22951) and 512 DM 2, we have evaluated potential effects on federally recognized Indian tribes and have determined that there are no potential effects.

*Clarity of Rule*

Executive Order 12866 requires each agency to write regulations that are easy to understand. We invite your comments on how to make this rule easier to understand, including answers to questions such as the following: (1) Are the requirements in the rule clearly stated? (2) Does the rule contain technical language or jargon that interferes with its clarity? (3) Does the format of the rule (grouping and order of sections, use of headings, paragraphing, etc.) aid or reduce its clarity? (4) Would the rule be easier to read if it were divided into more (but shorter) sections? (A ''section'' appears in bold type and is preceded by the symbol ''§ '' and a numbered heading; for example § 7.49, Cape Lookout National Seashore.) (5) Is the description of the rule in the **SUPPLEMENTARY INFORMATION** section of the preamble helpful in understanding the proposed rule? What else could we do to make the rule easier to understand?

Send a copy of any comments that concern how we could make this rule easier to understand to: Office of Regulatory Affairs, Department of the Interior, Room 7229, 1849 C Street, NW., Washington, DC 20240. You may also e-mail the comments to this address: *Exsec@ios.doi.gov.*

*Drafting Information:* The primary authors of this regulation are: Robert A. Vogel, Superintendent, Wouter Ketel, Chief Ranger, Michael W. Rikard, Chief of Resource Management, Jeff R. Cordes, Resource Management Specialist, Michael E. McGee, Facility Manager, Donna Tipton, Administrative Officer, Cape Lookout National Seashore; Sarah Bransom, Environmental Quality Division; and Jerry Case, NPS, Washington, DC.

**Public Participation**

If you wish to comment, you may mail or hand deliver your comments to: Cape Lookout National Seashore, 131 Charles Street, Harkers Island, NC 28531. Comments may also be submitted on the Federal rulemaking portal: *http://www.regulations.gov* Follow the instructions for submitting comments. Please identify comments by: RIN 1024–AD44.

Our practice is to make comments, including names and addresses of respondents, available for public review during regular business hours. Individual respondents may request that we withhold their home address from the rulemaking record, which we will honor to the extent allowable by law. If you wish us to withhold your name and/or address, you must state this prominently at the beginning of your comment. However, we will not consider anonymous comments. We will make all submissions from organizations or businesses, and from individuals identifying themselves as representatives or officials or organizations or businesses, available for public inspection in their entirety.

**List of Subjects in 36 CFR Part 7**

District of Columbia, National Parks, Reporting and recordkeeping requirements.

In consideration of the foregoing, the NPS proposes to amend 36 CFR part 7 as follows:

## PART 7—SPECIAL REGULATIONS, AREAS OF THE NATIONAL PARK SYSTEM

1. The authority for part 7 continues to read as follows:

**Authority:** 16 U.S.C. 1, 3, 9a, 460(q), 462(k); sec. 7.96 also issued under D.C. Code 8–137 (1981) and D.C. Code 40–721 (1981).

2. Add new § 7.49 to read as follows:

### § 7.49 Cape Lookout National Seashore.

Personal watercraft (PWC) may operate within Cape Lookout National Seashore only under the conditions specified in paragraphs (a) through (e) of this section and in the designated areas specified paragraph (f) in this section.

(a) PWC are allowed in the following areas only when remaining perpendicular to shore and operating at flat-wake speed.

(b) PWC use is not authorized for recreational use parallel to the shoreline, but only for access to the following areas specifically for landing purposes.

(c) In all cases, PWC have access to the sound side of the barrier islands only.

(d) PWC are prohibited in all areas of the national seashore except for the areas listed in paragraph (f) of this section. PWC are not allowed to beach on the oceanside.

(e) The Superintendent may temporarily limit, restrict or terminate access to the areas designated for PWC use after taking into consideration public health and safety, natural and cultural resource protection, and other management activities and objectives.

(f) PWC use is allowed only in the locations specified in this paragraph.

(1) North Core Banks:

| Access | Location |
|---|---|
| (i) Ocracoke Inlet. | Wallace Channel dock to the demarcation line in Ocracoke Inlet near Milepost 1. |
| (ii) Milepost 11B. | Existing sound-side dock at mile post 11B approximately 4 miles north of Long Point. |
| (iii) Long Point | Ferry landing at the Long Point Cabin area. |
| (iv) Old Drum Inlet. | Sound-side beach near Milepost 19 (as designated by signs), approximately ½ mile north of Old Drum inlet (adjacent to the cross-over route) encompassing approximately 50 feet. |

(2) South Core Banks:

| Access | Location |
|---|---|
| (i) New Drum Inlet. | Sound-side beach near Milepost 23 (as designated by signs), approximately ¼ mile long, beginning approximately ½ mile south of New Drum Inlet. |
| (ii) Great Island Access.. | Carly Dock at Great Island Camp, near Milepost 30 (noted as South Core Banks-Great Island on map). |

(3) Cape Lookout

| Access | Location |
|---|---|
| (i) Lighthouse Area North. | A zone 300 feet north of the NPS dock at the lighthouse ferry dock near Milepost 41. |
| (ii) Lighthouse Area South. | Sound-side beach 100 feet south of the "summer kitchen" to 200 feet north of the Cape Lookout Environmental Education Center Dock. |
| (iii) Power Squadron Spit. | Sound-side beach at Power Squadron Spit across from rock jetty to end of the spit |

(4) Shackleford Banks West End Access Sound-side beach at Shackleford Banks from Whale Creek west to Beaufort Inlet, except the area between the Wade Shores toilet facility and the passenger ferry dock.

Dated: December 20, 2005.

**Paul Hoffman,**

*Acting Assistant Secretary, Fish and Wildlife and Parks.*

[FR Doc. E5–8003 Filed 12–28–05; 8:45 am]

BILLING CODE 4312–52–P

## ENVIRONMENTAL PROTECTION AGENCY

## 40 CFR Parts 51 and 96

**[EPA–HQ–OAR 2003–0053; FRL–8016–6]**

## Rule To Reduce Interstate Transport of Fine Particulate Matter and Ozone (Clean Air Interstate Rule): Supplemental Notice of Reconsideration

**AGENCY:** Environmental Protection Agency (EPA).

**ACTION:** Notice of reconsideration; request for comment; notice of opportunity for public hearing.

**SUMMARY:** On May 12, 2005, EPA published in the **Federal Register** the final "Rule to Reduce Interstate Transport of Fine Particulate Matter and Ozone" (Clean Air Interstate Rule or CAIR). The CAIR requires certain upwind States to reduce emissions of nitrogen oxides ($NO_X$) and/or sulfur dioxide ($SO_2$) that significantly contribute to nonattainment of, or interfere with maintenance by, downwind States with respect to the fine particle ($PM_{2.5}$) and/or 8-hour ozone national ambient air quality standards (NAAQS). Subsequently, EPA received 11 petitions for reconsideration of the final rule. Through **Federal Register** notices dated August 24, 2005 and December 2, 2005, EPA previously initiated reconsideration processes on five specific issues in the CAIR and requested comment on those issues. In this notice, EPA is announcing its decision to reconsider one additional specific issue in the CAIR and is requesting comment on that issue.

The specific issue addressed in today's notice relates to the potential impact of a recent D.C. Circuit Court decision, *New York* v. *EPA*, 413 F.3d 3 (D.C. Cir. 2005), on the analysis used in developing CAIR to identify highly cost-effective emission reductions. This court decision vacated the pollution control project (PCP) exclusion in the New Source Review (NSR) regulations (the exclusion allowed certain environmentally beneficial PCPs to be excluded from certain NSR requirements).

The EPA is seeking comment only on the aspect of the CAIR specifically identified in this notice. We will not respond to comments addressing other provisions of the CAIR or any related rulemakings.

**DATES:** Comments must be received on or before February 16, 2006. If requested, a public hearing will be held on January 17, 2006 in Washington, DC. For additional information on a public hearing, see the **SUPPLEMENTARY INFORMATION** section of this preamble.

**ADDRESSES:** Submit your comments, identified by Docket ID No. EPA–HQ–OAR–2003–0053, by one of the following methods:

- *www.regulations.gov*: Follow the on-line instructions for submitting comments. Attention Docket ID No. EPA–HQ–OAR–2003–0053.
- *E-mail: A-and-R-Docket@epa.gov*. Attention Docket ID No. EPA–HQ–OAR–2003–0053.
- *Fax:* The fax number of the Air Docket is (202) 566–1741. Attention Docket ID No. EPA–HQ–OAR–2003–0053.
- *Mail:* EPA Docket Center, EPA West (Air Docket), Attention Docket ID No. EPA–HQ–OAR–2003–0053, Environmental Protection Agency, Mailcode: 6102T, 1200 Pennsylvania Ave., NW., Washington, DC 20460.
- *Hand Delivery:* EPA Docket Center (Air Docket), Attention Docket ID No. EPA–HQ–OAR–2003–0053, Environmental Protection Agency, 1301 Constitution Avenue, NW., Room B102; Washington, DC. Such deliveries are only accepted during the Docket's normal hours of operation, and special arrangements should be made for deliveries of boxed information.

*Instructions:* Direct your comments to Docket ID No. EPA–HQ–OAR–2003–0053. EPA's policy is that all comments

received will be included in the public docket without change and may be made available online at *http://www.regulations.gov*, including any personal information provided, unless the comment includes information claimed to be Confidential Business Information (CBI) or other information whose disclosure is restricted by statute. Do not submit information that you consider to be CBI or otherwise protected through www.regulations.gov or e-mail. The *www.regulations.gov* Web site is an ''anonymous access'' system, which means EPA will not know your identity or contact information unless you provide it in the body of your comment. If you send an e-mail comment directly to EPA without going through *www.regulations.gov* your e-mail address will be automatically captured and included as part of the comment that is placed in the public docket and made available on the Internet. If you submit an electronic comment, EPA recommends that you include your name and other contact information in the body of your comment and with any disk or CD ROM you submit. If EPA cannot read your comment due to technical difficulties and cannot contact you for clarification, EPA may not be able to consider your comment. Electronic files should avoid the use of special characters, any form of encryption, and be free of any defects or viruses. For additional information about EPA's public docket visit the EPA Docket Center homepage at *http://www.epa.gov/epahome/dockets.htm.* For additional instructions on submitting comments, go to the **SUPPLEMENTARY INFORMATION** section of this document.

*Docket:* All documents in the docket are listed in the *www.regulations.gov* index. Although listed in the index, some information is not publicly available, *e.g.*, CBI or other information whose disclosure is restricted by statute. Certain other material, such as copyrighted material, will be publicly available only in hard copy. Publicly available docket materials are available either electronically in *http://www.regulations.gov* or in hard copy at the EPA Docket Center (Air Docket), EPA/DC, EPA West, Room B102, 1301 Constitution Ave., NW., Washington, DC. The Public Reading Room is open from 8:30 a.m. to 4:30 p.m., Monday through Friday, excluding legal holidays. The telephone number for the Public Reading Room is (202) 566–1744.

**FOR FURTHER INFORMATION CONTACT:** For general questions concerning today's action as well as questions concerning the analyses described in section III of this notice, please contact Meg Victor, U.S. EPA, Office of Atmospheric Programs, Clean Air Markets Division, Mail Code 6204J, 1200 Pennsylvania Avenue, NW., Washington, DC 20460, telephone (202) 343–9193, e-mail address *victor.meg@epa.gov.* For legal questions, please contact Sonja Rodman, U.S. EPA, Office of General Counsel, Mail Code 2344A, 1200 Pennsylvania Avenue, NW., Washington, DC 20460, telephone 202–564–4079, e-mail address *rodman.sonja@epa.gov*. For information concerning a public hearing, please contact Jo Ann Allman, U.S. EPA, Office of Air Quality Planning and Standards, Air Quality Strategies and Standards Division, Mail Code C539–02, Research Triangle Park, NC 27711, phone number (919) 541–1815, e-mail address *allman.joann@epa.gov.*

**SUPPLEMENTARY INFORMATION:**

## General Information

### *A. Does This Action Apply to Me?*

The CAIR does not directly regulate emissions sources. Instead, it requires States to develop, adopt, and submit State implementation plan (SIP) revisions that would achieve the necessary $SO_2$ and $NO_X$ emissions reductions, and leaves to the States the task of determining how to obtain those reductions, including which entities to regulate.

### *B. What Should I Consider as I Prepare My Comments for EPA?*

Note that general instructions for submitting comments are provided above under the **ADDRESSES** section.

*1. Submitting CBI.* Do not submit this information to EPA through *http://www.regulations.gov* or e-mail. Clearly mark the part or all of the information that you claim to be CBI. For CBI information in a disk or CD ROM that you mail to EPA, mark the outside of the disk or CD ROM as CBI and then identify electronically within the disk or CD ROM the specific information that is claimed as CBI. In addition to one complete version of the comment that includes information claimed as CBI, a copy of the comment that does not contain the information claimed as CBI must be submitted for inclusion in the public docket. Information so marked will not be disclosed except in accordance with procedures set forth in 40 CFR part 2. Send or deliver information identified as CBI only to the following address: Roberto Morales, U.S. EPA, Office of Air Quality Planning and Standards, Mail Code C404–02, Research Triangle Park, NC 27711, telephone (919) 541–0880, e-mail at *morales.roberto@epa.gov*, Docket ID No. EPA–HQ–OAR–2003–0053.

*2. Tips for Preparing Your Comments.* When submitting comments, remember to:

- Identify the rulemaking by docket number and other identifying information (subject heading, **Federal Register** date and page number).
- Follow directions—The agency may ask you to respond to specific questions or organize comments by referencing a Code of Federal Regulations (CFR) part or section number.
- Explain why you agree or disagree; suggest alternatives and substitute language for your requested changes.
- Describe any assumptions and provide any technical information and/or data that you used.
- If you estimate potential costs or burdens, explain how you arrived at your estimate in sufficient detail to allow for it to be reproduced.
- Provide specific examples to illustrate your concerns, and suggest alternatives.
- Explain your views as clearly as possible, avoiding the use of profanity or personal threats.
- Make sure to submit your comments by the comment period deadline identified.

## Public Hearing

If requested, EPA will hold a public hearing on today's notice. The EPA will hold a hearing only if a party notifies EPA by January 10, 2006, expressing its interest in presenting oral testimony on issues addressed in today's notice. Any person may request a hearing by calling Jo Ann Allman at (919) 541–1815 before 5 p.m. on January 10, 2006. Any person who plans to attend the hearing should visit the EPA's Web site at *http://www.epa.gov/cair* or contact Jo Ann Allman at (919) 541–1815 to learn if a hearing will be held.

If a public hearing is held on today's notice, it will be held on January 17, 2006 at EPA Headquarters, 1310 L Street (closest cross street is 13th Street), 1st floor conference rooms 152 and 154, Washington, DC. The closest Metro stop is McPherson Square (Orange and Blue lines)—take 14th Street/Franklin Square Exit. Because the hearing will be held at a U.S. Government facility, everyone planning to attend should be prepared to show valid picture identification to the security staff in order to gain access to the meeting room.

If held, the public hearing will begin at 10 a.m. and end at 2 p.m. The hearing will be limited to the subject matter of this document. Oral testimony will be limited to 5 minutes. The EPA encourages commenters to provide

written versions of their oral testimonies either electronically (on computer disk or CD ROM) or in paper copy. The public hearing schedule, including the list of speakers, will be posted on EPA's Web site at *http://www.epa.gov/cair*. Verbatim transcripts and written statements will be included in the rulemaking docket.

A public hearing would provide interested parties the opportunity to present data, views, or arguments concerning issues addressed in today's notice. The EPA may ask clarifying questions during the oral presentations, but would not respond to the presentations or comments at that time. Written statements and supporting information submitted during the comment period will be considered with the same weight as any oral comments and supporting information presented at a public hearing.

All written comments must be received by EPA on or before February 16, 2006. Because of the need to resolve the issues in this document in a timely manner, EPA will not grant requests for extensions of the public comment period.

## Availability of Related Information

Documents related to the CAIR are available for inspection in Docket No. EPA–HQ–OAR–2003–0053 at the address and times given above. The EPA has established a Web site for the CAIR at *http://www.epa.gov/cleanairinterstaterule* or more simply *http://www.epa.gov/cair/*.

### Outline

I. Background
II. Today's Action
A. Grant of Reconsideration
B. Schedule for Reconsideration
III. Impact on CAIR Analyses of DC Circuit Decision in New York v. EPA
A. Background on *New York* v. *EPA* and its Relationship to CAIR
B. Potential Impact of Collateral Pollutant Increases and Mitigation Measures
1. Increases in Sulfuric Acid Emissions From SCR Retrofits
2. Increases in Sulfuric Acid Emissions From Wet FGD Retrofits in Combination With Switching to Higher Sulfur Coal
3. Summary of Combinations of CAIR SCR and/or FGD Retrofits and Coal Switches That May Increase Sulfuric Acid Emissions
4. Technology Options Available for Mitigating Sulfuric Acid Emission Increases
5. Analysis of $SO_3/H_2SO_4$ Mitigation Costs and Timing Impacts for CAIR SCR and/or Wet FGD Projects
6. Increases in Carbon Monoxide and Unburned Carbon (Solid Particulate) Emissions From Combustion Controls
7. Increases in Direct $PM_{2.5}$ Resulting From Fugitive Emissions From Storage or Handling of Lime, Limestone, or FGD Waste After Installation of Dry or Wet FGD
8. Collateral Air Pollutant Emissions From Units Switching From High to Low Sulfur Coals
9. Summary of Section III.B.
C. Potential Impact of NSR Permitting
IV. Statutory and Executive Order Reviews
A. Executive Order 12866: Regulatory Planning and Review
B. Paperwork Reduction Act
C. Regulatory Flexibility Act
D. Unfunded Mandates Reform Act
E. Executive Order 13132: Federalism
F. Executive Order 13175: Consultation and Coordination With Indian Tribal Governments
G. Executive Order 13045: Protection of Children From Environmental Health and Safety Risks
H. Executive Order 13211: Actions That Significantly Affect Energy Supply, Distribution or Use
I. National Technology Transfer Advancement Act
J. Executive Order 12898: Federal Actions To Address Environmental Justice in Minority Populations and Low-Income Populations

## I. Background

On May 12, 2005, the EPA (Agency or we) promulgated the final ''Rule to Reduce Interstate Transport of Fine Particulate Matter and Ozone'' (Clean Air Interstate Rule or CAIR)(70 FR 25162). As explained in the CAIR preamble and summarized in our December 2, 2005 reconsideration notice (70 FR 72268), CAIR requires 28 States and the District of Columbia to revise their State implementation plans (SIPs) to include control measures to reduce emissions of $SO_2$ and/or $NO_X$. Sulfur dioxide is a precursor to $PM_{2.5}$ formation and $NO_X$ is a precursor to $PM_{2.5}$ and ozone formation. By reducing upwind emissions of $SO_2$ and $NO_X$, CAIR will assist downwind $PM_{2.5}$ and 8-hour ozone nonattainment areas in achieving the NAAQS. As also described in the December 2005 reconsideration notice, the CAIR was promulgated through a process that involved significant public participation (70 FR 72271).

Following publication of the final CAIR on May 12, 2005, the Administrator received eleven petitions requesting reconsideration of certain aspects of the final rule. The complete petitions are available in the docket for the CAIR.[1] The petitions were filed pursuant to section 307(d)(7)(B) of the CAA. Under this provision, the Administrator is to initiate reconsideration proceedings if the petitioner can show that an objection is of central relevance to the rule and that it was impracticable to raise the objection to the rule within the public comment period or that the grounds for the objection arose after the public comment period but before the time for judicial review had run.

The EPA has already initiated a reconsideration process on five specific aspects of the final CAIR. On August 24, 2005 (70 FR 49708) and on December 2, 2005 (70 FR 72268), we published in the **Federal Register** notices announcing these decisions to reconsider specific aspects of the CAIR and requesting comment on those issues. Today's notice announces EPA's decision to reconsider one additional issue raised in a petition for reconsideration and requests comment on that additional issue.

By a letter dated December 22, 2005 we informed a petitioner of our intent to grant reconsideration on an issue addressed in their petition for reconsideration. We indicated in that letter that we would initiate the reconsideration process by publishing this notice.

## II. Today's Action

### *A. Grant of Reconsideration*

In this notice, EPA is announcing its decision to grant reconsideration on one issue raised in the petitions for reconsideration. This notice initiates that reconsideration process and requests comment on the issue to be addressed. Given the intense public interest in this rule, EPA has decided to provide this additional opportunity for public comment. At this time, however, EPA does not believe that any of the information submitted to date demonstrates that EPA's final decisions were erroneous or inappropriate. Therefore, we are not proposing any modifications to the final CAIR.

The issue on which EPA is requesting comment relates to the potential impact of a recent judicial opinion on the highly cost-effective analysis prepared by EPA in developing the CAIR. This

[1] Petitions for reconsideration were filed by: State of North Carolina (OAR–2003–0053–2192); FPL Group (OAR–2003–0053–2201); Florida Association of Electric Utilities (OAR–2003–0053–2200); Entergy Corporation (OAR–2003–0053–2195 and 2198 (attachment 1)); Massachusetts Department of Environmental Protection (OAR–2003–0053–2199); Integrated Waste Services Association (OAR–2003–0053–2193); Texas Commission on Environmental Quality (OAR–2003–0053–2212); Northern Indiana Public Service Corporation (OAR–2003–0053–2194 and 2213 (supplemental petition)); City of Amarillo, Texas, El Paso Electric Company, Occidental Permian Ltd, and Southwestern Public Service Company d/b/a/ Xcel Energy (OAR–2003–0053–2196 and 2197 (attachment 1) and 2205–2207 (attachments 2–4)); Connecticut Business and Industry Ass'n (OAR–2003–0053–2203); and Minnesota Power, a division of ALLETE. Inc. (OAR–2003–0053–2212).

case, *New York* v. *EPA*, 413 F.3d 3 (D.C. Cir. 2005) was decided on June 24, 2005—after the final CAIR was published but before the time for judicial review of the rule had run. This issue is described in greater detail in Section III of this notice.

The EPA is requesting comment only on the issue specifically described in Section III. We are not taking comment on any other provisions in the CAIR or otherwise reopening any other issues decided in the CAIR for reconsideration or comment.

*B. Schedule for Reconsideration*

For the issue addressed in this notice, EPA expects to take final action on reconsideration by March 15, 2006. By that date, EPA will finalize the process of reconsideration by issuing a final rule or proposing a new approach. EPA also expects, by March 15, 2006, to issue decisions on all remaining issues raised in the petitions for reconsideration.

## III. Impact on CAIR Analyses of DC Circuit Decision in New York v. EPA

*A. Background on New York v. EPA and Its Relationship to CAIR*

One industry petitioner claims that a recent opinion of the DC Circuit raises questions about the sufficiency of EPA's analysis prepared for the CAIR to identify highly cost-effective emission reductions. The petitioner argues that EPA should reconsider this analysis to take into account the potential impact of the decision in *New York* v. *EPA*, 413 F.3d 3 (D.C. Cir. 2005). This judicial opinion was issued on June 24, 2005—after the final CAIR had been promulgated, but within the 60 days provided by CAA section 307(b) for filing of petitions for review.[2] Among other things, the opinion vacated a provision of the New Source Review (NSR) regulations, commonly known as the pollution control project (PCP) exclusion. All pending petitions for rehearing of the case were denied by the Court on December 9, 2005. The EPA's request that the Court clarify its holding with regard to any retroactive effect of its ruling on the PCP issue was also denied. The Court determined that this clarification request was premature because no specific retroactive application of the provision was before the Court. The time for filing Petitions for Certiorari with the United States Supreme Court has not yet run. The analysis that follows looks at the potential impact of the *New York* v. *EPA* decision.

The PCP exclusion provided a mechanism for sources to exclude certain environmentally beneficial PCPs from the definition of ''major modification'' under Prevention of Significant Deterioration (PSD)/NSR[3] even though the PCP resulted in a significant net emissions increase in a collateral pollutant (*e.g.*, increase in $NO_X$ from flaring VOCs). This exclusion could only apply if the owner or operator, before beginning construction of the PCP, either provided notice to the Administrator (for certain projects listed in the regulations) or submitted a permit application to obtain approval to use the exclusion. If the exclusion were found not to apply, the source would either have to ensure that the PCP did not result in a significant net emissions increase in a collateral NSR-regulated pollutant (and thus avoid NSR review), or apply for and receive a NSR permit for the project. Petitioner asks EPA to reconsider whether EPA's highly cost effective analysis ''continues to be valid given the court's holding in [*New York* v. *EPA*].'' More specifically, Petitioner claims that CAIR sources will need to go through NSR permitting and that additional time and financial costs will be required for this permitting. Petitioner does not specify which projects it believes might require NSR permitting or what collateral increases in NSR-regulated pollutants it expects. Petitioner also claims that additional time will be necessary for NSR permitting and that therefore the compliance deadlines of January 1, 2009 and 2010 are ''in jeopardy.'' Petitioner, however, does not ask EPA to reconsider the 2009 and 2010 compliance deadlines. As noted above, this notice grants reconsideration only on the issue of the impact of the *New York* v. *EPA* decision on EPA's highly cost effective analysis.

In developing the CAIR, EPA conducted extensive analyses to identify highly cost-effective $SO_2$ and $NO_X$ emissions reductions based on controlling EGUs. These analyses are explained in the preamble to the CAIR (70 FR 25202–25212). The EPA has reviewed the petition for reconsideration and analyzed the potential impact of *New York* v. *EPA* on the CAIR cost-effectiveness determination and timing. This analysis indicates that some EGUs that install $SO_2$ and/or $NO_X$ controls for CAIR may incur relatively minor additional costs and minor impacts on timing as a result of *New York* v. *EPA*, but these potential impacts will neither affect the highly cost-effective determination that the Agency made in CAIR nor impact the timeframe for CAIR reductions. The EPA's analysis further shows that options exist that would allow units to meet the CAIR deadlines without changing plans to stagger PCP projects (sources will not be forced to install all PCPs at one time) and that the related costs would not alter the highly cost effective analysis done for the final CAIR. The EPA invites comments on this analysis and the potential impact of the *New York* v. *EPA* decision on EPA's highly cost-effective determination. EPA's analysis of this issue is summarized below and supplemental information is in the CAIR docket.

In order to evaluate the petitioner's claim, the Agency examined the potential for collateral increases in NSR-regulated air pollutants from the types of $NO_X$ and $SO_2$ controls on which EPA based its CAIR cost-effectiveness determination.[4] The EPA identified which of these technologies could have the potential to cause collateral increases in NSR-regulated air pollutants. The EPA then analyzed whether sources could mitigate any such collateral increases to avoid NSR review and analyzed the cost and timing impacts associated with potential mitigation measures. The EPA determined that projected collateral increases in NSR-regulated pollutants that might be significant enough to trigger an NSR threshold could be mitigated by many sources wishing to avoid the NSR permitting process. However, some sources may not be able to ensure mitigation of all collateral increases. Therefore, the Agency also analyzed the impacts associated with NSR permitting for these $NO_X$ and $SO_2$ pollution control projects.

The EPA considered each of the $NO_X$ and $SO_2$ control measures that were included in the CAIR cost-effectiveness determination and found that the following technologies may have the potential to cause collateral increases in air pollutants regulated under NSR: combustion controls, selective catalytic reduction (SCR), flue gas desulphurization (FGD), and fuel

[2] CAA section 307(d)(7)(B) provides that the Administrator shall convene a proceeding for reconsideration if the person raising an objection can show that: it was impracticable to raise the objection during the period for public comment or the grounds for the objection arose after such period but within the time specified for judicial review; and the objection is of central relevance to the outcome of the rule.

[3] PSD is the part of the NSR program that applies to sources located in areas in attainment with the NAAQS. Unless otherwise noted, in this notice, when we refer to the NSR program, NSR review, NSR permitting or other NSR requirements, we are referring to both the NSR and PSD programs and their respective requirements.

[4] All references to ''collateral increases'' in this document refer to potential collateral increases in NSR-regulated air pollutants.

switches to low sulfur coal. Many affected sources can choose to implement measures to mitigate the potential collateral emission increases (thereby obviating the need to undertake NSR analysis).

The Agency determined that some cost increases will result from actions that sources may take to mitigate collateral increases that result from CAIR control actions; however these impacts do not alter the final highly cost effective determination made in the final CAIR. In addition, implementing these control actions will not affect the feasibility of implementing the CAIR reductions in the required timeframe.

Further, if some sources apply for an NSR permit, the Agency believes that the impacts of NSR permitting will not affect the CAIR highly cost-effectiveness determination or the CAIR timeline. Note that in today's notice the Agency is not making any determination or prediction regarding what the specific NSR requirements might be for such projects.

The EPA's analysis for each of these $NO_X$ and $SO_2$ controls is discussed below and in a Technical Support Document (TSD) available in the docket entitled ''Technical Support Document: Impact on CAIR Analyses of D.C. Circuit Decision in *New York* v. *EPA*.''

*B. Potential Impact of Collateral Pollutant Increases and Mitigation Measures*

1. Increases in Sulfuric Acid Emissions From SCR Retrofits [5]

Many CAIR units are projected to install selective catalytic reduction (SCR) to reduce $NO_X$ emissions. The SCR catalyst oxidizes a portion of the $SO_2$ present in flue gas to $SO_3$. The amount of $SO_3$ added to the flue gas stream by SCR will be directly proportional to the fuel sulfur content. (Note that $SO_2$ is also oxidized to $SO_3$ in the boiler itself.)

Some $SO_3$ reacts with moisture in the flue gas to form sulfuric acid ($H_2SO_4$) and exits the stack as sulfuric acid vapor. The Agency's analysis for today's notice assumes that all sulfuric acid emitted will be counted as emissions of sulfuric acid mist—an NSR-regulated pollutant.

Sulfuric acid mist is also regulated under NSR as $PM_{2.5}$ (a criteria pollutant). Because $PM_{2.5}$ is a criteria pollutant, the NSR requirements vary depending on the location of the unit experiencing the emission increase, i.e., whether the unit is located in a nonattainment area. See further discussion of the Agency's analysis regarding permitting for these projects, below.

Although SCR retrofits can lead to increased sulfuric acid emissions, for the following reasons EPA expects that many units installing SCR for CAIR will not actually increase their sulfuric acid emissions and will therefore not incur any cost increase or timing burden associated with collateral increases of sulfuric acid:

*Installing Both SCR and FGD.* Many CAIR units that are expected to install SCR to reduce $NO_X$ emissions also are expected to install flue gas desulphurization (FGD) to reduce $SO_2$ emissions, and FGD is also effective at reducing $SO_3/H_2SO_4$ emissions. The two most common types of FGD systems (on which the Agency's CAIR cost-effectiveness analysis was based) are a lime-based spray dryer system (dry FGD) and a limestone-based wet FGD system (wet FGD). Considering the effectiveness of FGD at mitigating $SO_3/H_2SO_4$ emissions, the Agency expects that a CAIR unit installing SCR and FGD at the same time would not increase sulfuric acid emissions significantly enough to trigger NSR.

Note that some units may switch to a higher sulfur coal when they install FGD. The combination of installing SCR and dry FGD and switching to high sulfur coal may not result in increased sulfuric acid because dry FGD is very effective at mitigating $SO_3/H_2SO_4$. However, installation of SCR in combination with wet FGD and a switch to high sulfur coal could result in a significant net increase in sulfuric acid emissions.

*Switching to Lower Sulfur Coal with SCR Retrofit.* Some CAIR units that burn high sulfur coal may also choose to switch to lower sulfur coal when installing SCR. For units switching from high to low sulfur coal and installing SCR, there would likely be no net increase in sulfuric acid emissions.

*Ceasing to Inject $SO_3$ with SCR Retrofit.* Many CAIR units have cold-side electrostatic precipitators (ESP) in place to control particulate matter emissions. These control devices perform better with $SO_3$ present in the flue gas. Some units that have previously switched from higher-to lower-sulfur coal use injected $SO_3$ to bring the cold-side ESP performance back up. If such a unit installs SCR for CAIR, then the increased $SO_3$ from the SCR would lessen or obviate the need for $SO_3$ injection, and without the $SO_3$ injection there may be no net increase in sulfuric acid emissions.

2. Increases in Sulfuric Acid Emissions From Wet FGD Retrofits in Combination With Switching to Higher Sulfur Coal

Many CAIR units are projected to install FGD to reduce $SO_2$ emissions. As discussed above, operation of dry or wet FGD reduces $SO_3/H_2SO_4$ emissions. However, some units installing FGD for CAIR may choose to switch to a higher sulfur coal at the time they install FGD. Dry FGD reduces $SO_3/H_2SO_4$ sufficiently to most likely mitigate any increase from the higher sulfur coal. Considering the lower $SO_3/H_2SO_4$ removal efficiency of wet FGD, however, the potential exists for sulfuric acid emissions to increase from units that install wet FGD and switch to higher sulfur coal.

3. Summary of Combinations of CAIR SCR and/or FGD Retrofits and Coal Switches That May Increase Sulfuric Acid Emissions

The following table summarizes combinations of SCR and/or FGD control retrofits and coal switches that may occur as a result of CAIR, and identifies which of these combinations could lead to increases in sulfuric acid emissions significant enough to trigger the NSR threshold.

TABLE III–1.—COMBINATIONS OF CAIR SCR AND/OR FGD AND COAL SWITCHES THAT MAY INCREASE SULFURIC ACID EMISSIONS

| Combinations of SCR and/or FGD and coal switches | Increase in sulfuric acid emissions? |
|---|---|
| Install SCR | Possible. |
| Install SCR and switch from high to low sulfur coal. | No. |
| Install SCR with wet FGD (no coal switch). | No. |
| Install SCR with wet FGD and switch to higher sulfur coal. | Possible. |
| Install wet FGD (no coal switch). | No. |
| Install wet FGD and switch to higher sulfur coal. | Possible. |
| Install SCR and dry FGD | No. |
| Install dry FGD | No. |

[5] This SCR discussion is focused on the potential for sulfuric acid emission increases from SCR retrofits. Note that SCR conditions also favor a reaction between $SO_3$ and ammonia that produces ammonium bisulfate which condenses to form solid PM, however the majority of this PM will be captured in the particulate control device installed at the unit. Any such increase in PM emissions would likely not be significant enough to trigger NSR review, even when considered together with the small increase in PM emissions that could occur from storage or handling lime, limestone, or FGD waste (see discussion below).

4. Technology Options Available for Mitigating Sulfuric Acid Emission Increases

Several technology options are available for mitigating sulfuric acid emission increases from CAIR retrofit projects. These include:

- Injecting alkali materials into the furnace;
- Injecting alkali postfurnace;
- Injecting ammonia;
- Fuel switching (e.g., firing lower sulfur coal);
- Selecting specialized SCR catalyst with a low $SO_3$ conversion rate;
- Installing wet ESP; and
- Installing FGD.

The Agency anticipates that some CAIR sources may choose to install emerging multipollutant control technologies designed to reduce not only $SO_2$ and $NO_X$ but $SO_3$ and other pollutants as well. Generally, sources choosing to employ such technologies would do so if they found it to be economical. Although EPA does not endorse the purchase or sale of any specific products and services mentioned, example multipollutant technologies include:

- Powerspan ECO Technology; and
- Mobotec USA Inc. ROTAMIX System.

5. Analysis of $SO_3/H_2SO_4$ Mitigation Costs and Timing Impacts for CAIR SCR and/or Wet FGD Projects

*Cost Modeling for $SO_3/H_2SO_4$ Controls.* The Agency used the Integrated Planning Model (IPM) [6] to provide an upper-end estimate of the possible cost impacts for CAIR units that may install $SO_3/H_2SO_4$ controls. The EPA does not believe this analysis provides a true estimate of the costs to CAIR units of the *NY* v. *EPA* decision. Instead, EPA believes this analysis significantly overstates the potential costs. However, because this analysis shows that even when the costs are significantly overestimated they do not impact the analyses done for the final CAIR, EPA determined that a more refined analysis was not necessary to address petitioner's concerns.

The EPA believes this analysis overstates the likely true cost impact because, as explained below, it relies on several conservative assumptions. For example, we assumed that every unit that is projected to install SCR and/or wet FGD will incur increased costs for $SO_3/H_2SO_4$ mitigation.

Our cost analysis is based on the assumption that each unit that retrofits SCR and/or wet FGD will install wet ESPs for $SO_3/H_2SO_4$ mitigation.[7] The Agency believes that the choice of $SO_3/H_2SO_4$ mitigation method would depend greatly on the specifics of the affected sources, thus it is difficult to predict control choices. For this cost analysis, EPA chose to model costs based on wet ESP because we believe the costs of this technology are representative of the costs of technologies that sources might choose to install.

The EPA performed an IPM sensitivity analysis in which we added costs for wet ESP to every unit that installs SCR and/or wet FGD. We based this sensitivity analysis on the IPM model run that includes the CAIR, Clean Air Mercury Rule (CAMR) and Clean Air Visibility Rule (CAVR) requirements. Note that the IPM modeling for the final CAIR highly cost-effectiveness determination does not include the CAMR and CAVR requirements. However, the Agency subsequently conducted IPM modeling that reflects CAIR, CAMR and CAVR. The IPM analysis discussed in today's notice (which examines the possible cost impacts of $SO_3/H_2SO_4$ mitigation) is based on the modeling that includes CAIR, CAMR and CAVR because that modeling best reflects current requirements.[8]

As noted above, this modeling—the $SO_3/H_2SO_4$ mitigation IPM sensitivity modeling—overstates the possible cost impacts to CAIR units for several reasons. As discussed above, only the following three combinations of CAIR SCR and/or wet FGD retrofits might increase sulfuric acid emissions significantly to trigger the NSR threshold: units installing SCR alone (without switching to lower sulfur coal); units installing SCR with wet FGD and switching to higher sulfur coal; and, units installing wet FGD alone and switching to higher sulfur coal. The IPM sensitivity analysis conservatively assumes $SO_3/H_2SO_4$ mitigation costs are incurred by every unit projected to retrofit SCR and/or wet FGD. We note, however, that based on EPA's IPM modeling, for the first and second CAIR phases, respectively, only 16 percent and 11 percent of total CAIR-affected generating capacity (i.e., capacity of units in CAIR States with capacity greater than 25 MW) are projected to retrofit in any of these three combinations that might increase sulfuric acid emissions significantly to trigger the NSR threshold.

Also, it is possible that units that inject $SO_3$ to improve cold-side ESP performance would cease injecting $SO_3$ after installing SCR which could result in the net $SO_3$ increase being insufficient to trigger NSR (as discussed above), however the Agency's IPM sensitivity does not take into account this possibility.

Additionally, the IPM sensitivity model run overstates the cost impacts to CAIR units because that modeling added $SO_3$/sulfuric acid mitigation costs for all units retrofitting SCR and/or wet FGD, including retrofits that are projected to occur prior to commencement of CAIR retrofits (the Agency assumes that retrofits occurring prior to 2007 do not result from CAIR, but rather from existing programs such as the title IV $SO_2$ program and the $NO_X$ SIP Call, however the IPM modeling does not account for this distinction). Further, our analysis overstates the cost impacts to CAIR units because the modeling includes retrofits that occur in the base case (without CAIR) and also includes the CAMR and CAVR requirements.

Further, in the IPM sensitivity analysis we assumed units would incur costs for year-round operation of wet ESP in all CAIR States, including the States that are only required to make ozone season $NO_X$ reductions for CAIR. Finally, the IPM sensitivity run overstates the cost impacts because we added costs for wet ESP to each affected unit although $SO_3/H_2SO_4$ mitigation options are available that are less expensive than wet ESP.

Nonetheless, the Agency's cost analysis assumed that every unit that is predicted to install SCR and/or wet FGD in the CAIR/CAMR/CAVR modeling will incur additional costs for year-round operation of a wet ESP, in order to provide an upper-end estimate of the possible cost impacts of $SO_3/H_2SO_4$ mitigation.

Table III–2 shows the results of this analysis. It compares the $SO_2$ and $NO_X$

[6] The IPM is a multiregional, dynamic, deterministic linear programming model of the U.S. electric power sector. The Agency uses IPM to examine costs and, more broadly, analyze the projected impact of environmental polices on the electric power sector in the 48 contiguous States and the District of Columbia.

[7] Although the Agency based this analysis on installation of wet ESP, the Agency is not making any determination or prediction regarding what the specific PSD/NSR requirements might be for these projects.

[8] The two model runs (the final CAIR modeling or the subsequent modeling with CAMR and CAVR) use the same underlying base case assumptions in the same modeling platform. In other words, the two runs are based on identical assumptions for parameters such as (this is not an exhaustive list): EGU inventory, fuel prices, impacts of the national title IV $SO_2$ program, $NO_X$ SIP program, State-specific programs, and NSR settlements. Note that projected marginal costs for CAIR $SO_2$ and $NO_X$ reductions are about $100 per ton less in the CAIR/CAMR/CAVR modeling than in the final CAIR modeling, due to interactions between the three programs.

marginal costs in the $SO_3/H_2SO_4$ mitigation sensitivity analysis to the marginal costs in the final CAIR modeling (Table III–2 also shows marginal costs from the modeling that included CAIR, CAMR and CAVR).[9] In the sensitivity analysis, the costs of $SO_3/H_2SO_4$ mitigation are reflected in the marginal costs of $SO_2$ and $NO_X$ control.

TABLE III–2.—$SO_2$ AND $NO_X$ ESTIMATED MARGINAL COST

[1999$ per ton] [1]

| | $SO_2$ Annual | | $NO_X$ Annual | |
|---|---|---|---|---|
| | 2010 | 2015 | 2009 | 2015 |
| CAIR modeling used in final CAIR cost-effectiveness analysis | $700 | $1,000 | $1,300 | $1,600 |
| CAIR/CAMR/CAVR modeling | 600 | 900 | 1,200 | 1,500 |
| Sensitivity analysis with $SO_3/H_2SO_4$ mitigation (based on CAIR/CAMR/CAVR modeling) | 700 | 900 | 1,600 | 2,000 |

[1] EPA IPM modeling is available in the docket. Projected costs are rounded to the nearest hundred dollars.

As shown in Table III–2, projected $SO_2$ marginal costs in the $SO_3/H_2SO_4$ mitigation sensitivity modeling are lower than the $SO_2$ marginal costs in the final CAIR modeling for 2015 and are about the same as the costs in the final CAIR for 2010. This does not imply that the added costs of $SO_3H_2SO_4$ mitigation are so small as to have no effect on the marginal costs of $SO_2$ reduction. Rather, the added costs of $SO_3/H_2SO_4$ mitigation increase the $SO_2$ marginal cost from the level in the CAIR/CAMR/CAVR run a small amount. As explained above, marginal cost levels in CAIR/CAMR/CAVR modeling are lower than costs in the modeling in the CAIR final rulemaking. In the $SO_3/H_2SO_4$ mitigation sensitivity analysis, the 2010 cost is increased to about the level in the final CAIR modeling, and the 2015 cost increase is small enough that it is not apparent when the costs are rounded to the nearest hundred dollars. Including the added costs of $SO_3/H_2SO_4$ mitigation, the projected marginal costs of $SO_2$ reduction under CAIR remain at the lower end of the reference range of marginal costs cited in the Agency's CAIR cost-effectiveness determination. The range of marginal costs cited in CAIR is $600 to $2,200 per ton of $SO_2$ removed (70 FR 25201–25204).

As shown in Table III–2, projected $NO_X$ marginal costs in the $SO_3/H_2SO_4$ mitigation sensitivity are higher than the costs in the final CAIR modeling. However, including the added costs of $SO_3/H_2SO_4$ mitigation, the projected $NO_X$ marginal costs remain at the lower end of the reference range of marginal costs cited in the Agency's cost-effectiveness determination. The range of marginal costs cited in CAIR is $2,000 to $19,600 per ton of annual $NO_X$ removed (70 FR 25208–25210).

For the reasons discussed above, the Agency's analysis likely overstates the cost impacts of $SO_3/H_2SO_4$ mitigation. Nonetheless, even with these projected cost impacts, the marginal costs remain at the low end of the range of costs cited in the final CAIR highly cost-effectiveness determination (70 FR 25201–25204, 25208–25210). Thus, that determination is not affected by the possible costs that may be incurred by units installing $SO_3/H_2SO_4$ mitigation technologies. The Agency believes that average costs of $SO_2$ and $NO_X$ control also would not increase significantly enough to impact the CAIR cost-effectiveness determination, because the projected marginal costs do not increase enough to impact the CAIR analysis.

The Agency discusses below its evaluation of the feasibility of installing $SO_3/H_2SO_4$ mitigation measures, and the impacts of NSR analysis.

*Feasibility and Timing Analysis.* In its CAIR analysis, the Agency evaluated the feasibility of installing projected $SO_2$ and $NO_X$ control retrofits in the CAIR timeframe. In particular, EPA examined the availability of boilermaker labor to install retrofits during the period when the CAIR retrofits will occur and determined that sufficient labor will be available (70 FR 25215–25225). The Agency's CAIR analysis was discussed in detail in a TSD entitled ''Boilermaker Labor and Installation Timing Analysis,'' OAR–2003–0053–2092 (''final CAIR boilermaker TSD'').

The Agency has evaluated the potential impacts on the CAIR timeline from installation of $SO_3/H_2SO_4$ mitigation technologies. Specifically, we examined the impact of installing wet ESP on the availability of boilermaker labor during the time when control retrofits will be installed for the two CAIR phases. The EPA's analysis assumed that units that might experience sulfuric acid emission increases greater than the NSR threshold while incorporating $NO_X$ and/or $SO_2$ controls for CAIR would choose to install wet ESP, which is a conservative assumption because $SO_3/H_2SO_4$ mitigation measures are available that would require less boilermaker labor than wet ESP. For this boilermaker labor analysis, the Agency used the identical assumptions regarding boilermaker availability factors (*i.e.*, boilermaker sources, population, average annual work hours, activity periods, and duty rates) that we used in the boilermaker analysis for the final CAIR. These factors are defined in the final CAIR boilermaker TSD.

For today's notice, the Agency based its boilermaker analysis on the generating capacity that is projected to install $NO_X$ and $SO_2$ controls that may increase sulfuric acid emissions (the three combinations of SCR and/or wet FGD retrofits and coal switches identified in Table III–1). The EPA examined the capacity of retrofits that are projected to occur during the time period when CAIR retrofits would occur for the two CAIR phases (*i.e.*, during the years 2007 through 2015 inclusive). This analysis includes retrofits projected to occur as result of the CAIR, CAMR and CAVR policies as well as retrofits for base case policies (*i.e.*, retrofits for existing regulatory requirements such as the title IV $SO_2$ program and the $NO_X$ SIP Call) because some base case retrofits will occur during the time period 2007 through 2015.

In its analysis for the final CAIR, the Agency determined that adequate boilermaker labor would be available to complete the CAIR $NO_X$ and $SO_2$ control retrofits in the CAIR timeline, with sufficient contingency factors available to offset possible additional labor needs due to unforeseen events. In the final CAIR, EPA considered a number of scenarios that included different assumptions for boilermaker duty rates (*i.e.*, the amount of time required for a boilermaker to install control equipment), electricity demand and gas prices. In the most conservative scenario analyzed, EPA determined that there would be a 14 percent boilermaker labor contingency (*i.e.*, 14 percent more labor

[9] As in the CAIR NFR (70 FR 25198), the Agency reports cost effectiveness results for both of the CAIR phases although the Phase I CAIR control levels were determined based on feasibility rather than cost effectiveness.

would be available than the amount required to install the controls). The boilermaker duty rates used for this case were provided by a commenter on the CAIR, were well above the levels determined to be appropriate in a detailed study conducted by EPA, and, based on EPA's investigations, reflected the worst-case assumptions for the boilermaker labor requirements associated with building air pollution controls. If the boilermaker requirements are estimated using EPA's boilermaker duty rates, the available contingency would be higher.

The revised boilermaker labor analysis that the Agency conducted for today's notice, which takes into account boilermaker labor required to install wet ESP, indicates that adequate boilermaker labor will be available even considering the additional boilermakers that may be needed to install the wet ESP. Considering the same assumptions that yielded a 14 percent contingency in the final CAIR along with additional boilermakers needed to install wet ESPs, EPA determined that there would be a 4 percent contingency. Again, if the boilermaker requirements are estimated using EPA's boilermaker duty rates, the available contingency would be higher.

This analysis is conservative in that it assumes that in all cases where companies install equipment to mitigate $SO_3/H_2SO_4$ increases, they install wet ESPs, which use more boilermakers than other options such as sorbent injection. The remaining contingency factors are still adequate (although reduced). Thus, the $NO_X$ and $SO_2$ control retrofits projected to be installed for CAIR can be completed in the available time, even considering the potential additional labor needs for $SO_3/H_2SO_4$ mitigation. Note that any $SO_3/H_2SO_4$ controls for CAIR projects can be retrofit concurrently with the $SO_2$ and $NO_X$ retrofits, and no additional time would be needed. See further discussion of timing in the permitting section, below.

Details of EPA's revised boilermaker labor analysis are in a TSD in the docket entitled ''Impact on CAIR Analyses of D.C. Circuit Decision in *New York* v. *EPA*.''

The Agency believes that the impacts of mitigating the potential emission increases, or undertaking NSR review for these units, are not substantial enough to alter the CAIR highly cost-effective determination or the feasibility and timing analysis. Implications of NSR analysis for such units are discussed further below.

6. Increases in Carbon Monoxide and Unburned Carbon (Solid Particulate) Emissions From Combustion Controls

Combustion controls that may be installed for CAIR to reduce $NO_X$ emissions include low $NO_X$ burners (LNB) and overfire air (OFA). Both LNB and OFA reduce $NO_X$ generation rates by changing the combustion process. Either one or both technologies may be installed on a generating unit to control $NO_X$ emissions. Depending on the boiler design, these changes may result in an increase in emissions of carbon monoxide (CO) and unburned carbon (solid particulate), although the potential for increases significant enough to trigger the NSR threshold exists only with the use of OFA (because LNB does not affect the combustion process extensively).

These emissions increases can be minimized by using more modern control designs and techniques.[10 11 12] These increases can also be minimized by using less-aggressive OFA flow rates.[13] The $NO_X$ removal efficiencies for combustion controls assumed in EPA's CAIR analysis are not aggressive.[14] The Agency believes that units projected to install combustion controls can opt for moderate levels of OFA flow rates and still achieve the $NO_X$ reduction levels projected in our CAIR analysis, without causing significant increases in CO and unburned carbon emissions. Therefore, given the conservative removal efficiency assumptions in EPA's original analysis, there would be no additional significant costs associated with mitigating CO emissions to avoid NSR when combustion controls are added.

Certain affected CAIR sources are projected to install both combustion controls and SCR. These sources have the option to use combustion control designs ensuring minimal CO and unburned carbon impacts, with SCR compensating for the possible reduced performance of combustion controls. Considering the potential of SCR technology to provide 90 percent $NO_X$ reduction with a minimum $NO_X$ rate of 0.06 lb/MMBtu, most of these sources would be able to use this strategy and avoid use of aggressive combustion control designs.

The affected CAIR sources also have the option to use an advanced OFA system with the potential to achieve high $NO_X$ reduction levels, with no increases in CO and unburned carbon levels. This technology utilizes rotating opposed fire air (ROFA) and has been installed or demonstrated at several plants worldwide.[15]

The Agency believes that there will be no increase in cost to CAIR units for using good combustion practices to mitigate CO and unburned carbon increases, because industry generally uses such practices already. Implementation of these practices would not affect the Agency's CAIR highly cost-effectiveness determination or the feasibility and timing analysis.

In addition, the implications of NSR analysis for such units are relatively minor, as discussed further below.

The Agency believes that the impacts of either mitigating the potential emission increases, or undertaking NSR review for these units, are not substantial enough to affect the CAIR highly cost-effective determination or the feasibility and timing analysis. Implications of NSR analysis for such units are discussed further below.

7. Increases in Direct PM2.5 Resulting From Fugitive Emissions From Storage or Handling of Lime, Limestone, or FGD Waste After Installation of Dry or Wet FGD

As discussed above, dry and wet FGD are effective $SO_3/H_2SO_4$ mitigation options. A separate consideration, however, is the potential for increased emissions of direct PM (including PM2.5) resulting from the storage and handling of lime or limestone for the FGD and from hauling FGD waste.

The EPA believes that operation of FGD will not result in significant increases of emissions of direct PM (including PM2.5). Fugitive PM emissions resulting from the storage and handling of lime or limestone and from waste hauling associated with FGD operation are minimal since most lime

[10] T. Steitz, *et al.*, ''Wall Fired Low $NO_X$ Burner Evolution for Global $NO_X$ Compliance,'' Foster Wheeler Web site, *http://www.fwc.com/publications/tech_papers/index.cfm#14905467952D7FCAFC2A5B206EAE10F0*, Web site accessed on September 30, 2005.

[11] K. McCarthy, *et al.*, ''Improved Low $NO_X$ Firing Systems for Pulverized Coal Combustion,'' Foster Wheeler Web site, *http://www.fwc.com/publications/tech_papers/index.cfm#14905467952D7FCAFC2A5B206EAE10F0*, Web site accessed on September 30, 2005.

[12] ''Reducing Emissions of Nitrogen Oxides Via Low-$NO_X$ Burner Technologies,'' Clean Coal Technology, The Department of Energy, Topical Report No. 5, September 1996.

[13] A. Kokkinos, *et al.*, ''B&W's Experience Reducing $NO_X$ Emissions in Tangentially-Fired Boilers—2001 Update,'' Power-Gen International 2001, December 11–13, 2001, Las Vegas, Nevada.

[14] The $NO_X$ removal efficiency for each type of combustion control used in EPA's analysis for CAIR was estimated as an average of the reported efficiencies for a large number of units equipped with these controls. In a unit equipped with both LNB and OFA, LNB provides a greater part of the overall $NO_X$ removal.

[15] MOBOTECUSA Web site, *http://www.mobotecusa.com/*.

and limestone will be stored in covered structures with particulate controls, lime and limestone will be transported in covered vehicles, and particulate emissions mitigation techniques, including spraying near storage areas, hauling roads, and waste hauling trucks, will be employed. Fugitive emissions could result from dust recirculation due to truck hauling, but these emissions are also not significant enough to trigger NSR.

The Agency believes that the impacts of either mitigating these small potential emission increases, or undertaking NSR review for these units, are not substantial enough to affect the CAIR highly cost-effective determination or the feasibility and timing analysis.

8. Collateral Air Pollutant Emissions From Units Switching From High to Low Sulfur Coals

A switch from high-to low-sulfur coals is an option projected to be used by certain CAIR sources for $SO_2$ control. In some cases, modifications to the existing equipment may become necessary to maintain compatibility with the boiler and associated systems. One of the more common modifications required is the need to restore the existing ESP performance, which may be degraded due to the high-resistivity ash generated from firing of low-sulfur coals (if ESP performance is not restored, emissions of PM might increase). In general, use of a flue gas conditioning system fully restores the ESP performance to levels obtained from firing of high-sulfur coals.

The impact of coal switching on the existing plant equipment would vary with the amount of switch. For example, if only a portion of the existing high-sulfur coal is replaced with the new low-sulfur coal, the impact may be minimal. Also, use of certain types of low-sulfur coals may even have a beneficial impact on some of the NSR-regulated pollutants. For example, use of western sub-bituminous coals may result in a reduction in the CO and unburned carbon levels, because of the high volatile contents of such coals.

In the CAIR analysis, EPA assumed that the sources opting to switch to low-sulfur coal would either select compatible coals or provide modifications where required to avoid any adverse impacts on their boilers, including minimization of any increases in air emissions. The EPA included costs for such modifications in its estimates for the CAIR implementation, which were based on the coal switch experience for the power industry. Therefore, no further analysis is necessary.

9. Summary of Section III.B.

EPA's IPM modeling predicts that some CAIR units will add controls with the potential to increase collateral emissions of NSR-regulated pollutants. However, the Agency has determined that for each of the $NO_X$ and $SO_2$ controls on which EPA based its CAIR highly cost-effectiveness determination, there are technology options available to mitigate potential collateral increases of NSR regulated pollutants such that many sources, looking to comply with the CAIR requirements, would not trigger NSR review for potential collateral increases (however, some sources may not be able to ensure mitigation of all collateral increases). Further, although some additional cost may be associated with mitigation measures, EPA's analysis showed that these costs do not change the conclusions of EPA's highly cost-effectiveness determination. In addition, implementing these mitigation measures will not affect the feasibility of implementing the CAIR reductions in the required timeframe. Options exist that would allow units to meet the CAIR deadlines without changing plans to stagger PCP projects. For example, a unit planning to install SCR first and FGD later could choose to use sorbent injection technology to mitigate $SO_3$/$H_2SO_3$ during the time between installation of the SCR and the FGD.

*C. Potential Impact of NSR Permitting*

Although the above analysis shows that sources installing controls for CAIR generally will have options to avoid triggering NSR review for potential collateral increases, EPA also analyzed the potential impact on its CAIR analyses of sources whose projects could result in a net emissions increase despite mitigative measures that might be taken, and might therefore apply for and obtain the necessary NSR permits to address such increase. Accordingly, EPA analyzed whether sources undergoing NSR permitting would have adequate time to obtain the preconstruction permit and whether any controls required would impact EPA's highly cost-effective analysis done for CAIR. The Agency intends to work with the States to quickly resolve any questions regarding permitting of CAIR pollution control projects, and will provide technical assistance when requested to facilitate permitting.

In its analysis for the final CAIR, the Agency assumed that affected sources would have about 22 months available for preconstruction activities (*e.g.*, permitting, planning, conceptual design, engineering, financing, and procurement) for the first phase of CAIR control retrofits. The 22 months is based on the time from the CAIR promulgation date (March 10, 2005) until about 4 months after the SIP submission date (about mid-January 2007).[16] The *New York* v. *EPA* judicial decision was issued on June 24, 2005. As a result of that decision, either CAIR sources will need to mitigate emissions through one of the various options discussed above, or they may choose to apply for NSR permits. Sources that elect to obtain NSR permits then would have almost 19 months for NSR review for the first CAIR phase (from the date of the *New York* v. *EPQ* decision until about mid-January 2007). The Agency believes that this is adequate time to perform NSR review, as explained further below, thus the CAIR timeline would not be impacted.

In the CAIR, the Agency determined highly cost-effective amounts of emission reductions based on modeled costs of $SO_2$ and $NO_X$ mitigation, using IPM. The IPM cost modeling used in EPA's analysis reflects the capital and operations and maintenance costs of control technologies. The modeling does not include costs associated with permitting. Costs for permitting are insignificant compared to costs of constructing and operating these controls technologies.

Prior to the D.C. Circuit decision to vacate the PCP provisions in the NSR program, EGUs desiring to use the PCP exclusion were required to either provide notice to the Administrator (for certain projects listed in the regulations) or submit a permit application to obtain approval to use the exclusion. This process had requirements very similar to those that apply to sources subject to NSR review. The basic steps for sources undergoing NSR review are:

a. Preparation of the permit application and participation in any pre-permit application meetings;

b. Issuance of permit application completeness determination by the regulatory agency;

c. Development and negotiation of the draft permit;

d. Opportunity for public notice and comment on the draft permit;

e. Response by the regulatory agency to public comments; and

f. Possible administrative and judicial appeals.

Of these steps, the bulk of the effort is concentrated in the beginning steps with the preparation of the permit

[16] "Boilermaker Labor Analysis and Installation Timing," March 2005, discusses the Agency's projected schedules for CAIR SCR and FGD retrofits (OAR–2003–0053–2092).

application and collection and analysis of the data necessary to demonstrate that the project would not present problems with the NAAQS. The PCP exclusion did not excuse a source from undergoing a similar analysis in order to obtain the PCP determination. Specifically, under the new source review rules of 2002 (67 FR 80186), a source seeking to use the PCP provisions for one of the listed technologies would automatically qualify for the exclusion if it could demonstrate that there was no adverse air quality impact, that is, if it would not cause or contribute to a violation of NAAQS or PSD increment, or adversely impact an air quality related value (AQRV), such as visibility, that had been identified for a Federal Class I area by a Federal Land Manager (FLM). In performing the air quality analysis under the PCP provision, the procedures established for conducting air quality analysis in conjunction with typical NSR permitting were used. As such, the up front burden associated with undergoing NSR review is comparable to the burden to which a source requesting a PCP exclusion would have been subject.

Once the permit application is complete, whether processed as a PCP exclusion request or as a formal PSD permit application, the processing by the permitting authority usually does not take any longer under the formal PSD process than under the previous PCP exclusion process. Typically, in the formal NSR permitting process, once the application is submitted to the permitting authority, there is a process during which the draft permit is developed and published to give the public an opportunity to comment on the draft permit. Depending on the comments received, some changes to the draft permit may be made and a final permit would then be issued to the source. Based on the permitting authorities' experience, this process typically takes approximately six to eight months. In the case of permits issued for the construction of pollution control projects on CAIR units, we see no reason why the process should require a longer time period than is normally required.

In addition, we do not believe that the PSD requirement for submitting pre-application monitoring data will cause a delay in submitting the required PSD permit applications as the petitioner alleges. The relevant provision which requires the applicant to include 12 months of continuous ambient air quality data allows applicants to rely on ambient air quality data that has already been collected and is representative of the air quality in the vicinity of the affected source. Moreover, such data is only required when the source's emissions increase is predicted to exceed the prescribed significant monitoring value for that pollutant. See 40 CFR 52.21(i)(5). Thus, sources generally will not have to take the time to collect such data on their own when it is required. In the few cases, if any, where it is the applicant's burden to collect the data, we believe they will have adequate time to do so while the overall project to comply with CAIR is being developed without delaying the necessary permit application.

For sources that requested a PCP exclusion from the list of approved projects (67 FR 80246), the timeline could have been very similar in duration to the one described above for sources undergoing NSR review. The projects included on the list were presumed to be environmentally beneficial based on the premise that the source seeking the PCP exclusion would design and operate the controls in a manner that would be consistent with proper industry, engineering, and reasonable practices, and that the source would minimize increases in collateral pollutants within the physical configuration and operational standards usually associated with the emissions control device or strategy. The source seeking the PCP exclusion would have been required to certify that this was true in the notification sent to the reviewing authority. It is important to highlight that the environmentally beneficial determination for the listed projects was a presumption, and as such, it could be rebutted in cases in which a reviewing authority determined that a particular proposed PCP project would not be environmentally beneficial.

Before a source requesting a PCP exclusion could have begun actual construction of the PCP, it was required to submit a notice to the reviewing authority that included the following information (and depending on the reviewing authority's requirements, this information could have been submitted with a part 70, part 71 or other SIP-approved permit application such as a minor NSR permit application): (1) A description of project; (2) an analysis of the environmentally beneficial nature of the PCP, including a projection of emissions increases and decreases (speciated, using an appropriate emissions test for the emissions unit); and (3) a demonstration that the project will not have an adverse air quality impact. Often, a screening model could be used to estimate the ambient impacts of the increase from the facility as a result of the PCP. Special attention would have been given in cases where a FLM had already identified adverse impacts for an AQRV. In such cases, the facility requesting the PCP exclusion would have been expected to record and consider any information that the FLM had made available concerning the adverse effects, to help determine whether the pollutant impacts from the collateral emissions increase had the potential to cause further adverse impacts.

If the requested PCP was included in the list of projects presumed to be environmentally beneficial, the source requesting the PCP exclusion would have been allowed to begin construction on the PCP immediately upon submitting the required notice to the reviewing authority. However, if the reviewing authority determined that the source did not qualify for a PCP exclusion, the source might have been subject to a delay in the project or an order to not undertake the project. If the reviewing authority, upon receiving the notification of using the PCP exclusion, determined that an air quality impacts analysis was reasonably necessary, it was entitled to request more information from the source, including additional local or regional modeling.

Pollution control projects of the magnitude at issue here will require large capital expenditures and significant engineering lead times. We believe that in most cases, the internal procedures within each company to request, approve, and allocate the necessary funding and then design and construct the control equipment will be at least as long as the average permit application and approval process.

*Additional requirements that may result from NSR review.* As discussed in previous sections, sources installing controls to comply with CAIR that experience collateral emissions increases of some NSR regulated pollutants likely would have requested a PCP exclusion. In particular, sulfuric acid mist emissions and CO emissions are the two pollutants expected to be of most interest.

For emissions of CO, the Agency is aware of previous PSD permits that have been processed by permitting authorities that demonstrated no NAAQS problems, while requiring no additional add-on controls for the CO emissions. The PSD permits given to these sources included Best Achievable Control Technology (BACT) emissions limits for CO where in most cases such limits did not previously exist. Most of these limits have been set at or near the level where the utility has historically operated or was anticipated to operate.

This is the case because there is no technically feasible add-on control technology for controlling CO emissions from coal-fired boilers other than good combustion practices.

For emissions increases of sulfuric acid mist, NSR permitting analysis treats sulfuric acid mist as a NSR-regulated pollutant and also as a component of $PM_{2.5}$ (a criteria pollutant). The Agency conducted an analysis of the information available for EGUs that have undergone NSR review and that included a determination of controls (BACT or Lowest Achievable Emission Rate (LAER)) for sulfuric acid mist. The analysis showed that pollution prevention measures (such as low sulfur fuel) and add-on controls (such as flue gas desulfurization or FGD) were cited in about two thirds of the determinations, while about one third resulted in no additional control. As previously stated, both switching to low sulfur coal and the use of FGD are common techniques available for CAIR units to minimize collateral emissions increases due to the installation of CAIR-related controls. As a result, we expect that a source going through NSR for significant net emissions increases in sulfuric acid mist due to CAIR controls would be required to install technology similar, if not identical, to those presented here as available mitigation techniques to avoid NSR review.

Because sulfuric acid mist emissions are also a component of $PM_{2.5}$, EPA also looked at what, if any, additional $PM_{2.5}$ controls would be required for sources required to undergo NSR should a significant emissions increase of $PM_{2.5}$ occur. For CAIR emissions units located in non-attainment areas, we also believe that the result of the LAER analysis for these units will result in control technologies similar, if not identical, to those listed as available mitigation techniques. In addition to the LAER requirements, CAIR sources required to meet nonattainment area NSR would be required to obtain emissions reductions to offsets their significant emissions increase of $PM_{2.5}$ emissions as part of non-attainment NSR permit process. We believe PM fine offsets will be widely available for any of these projects located in non-attainment areas. In the PM Implementation Rule (70 FR 66042) we proposed to allow units to use decreases in PM fine precursor emissions as offsets for direct PM fine emission increases. Units installing controls to comply with CAIR will have very large decreases in PM fine precursors ($SO_2$ and $NO_X$). These decreases are so large that we believe the decreases in PM fine precursor emissions from other CAIR units will provide sufficient offsets for the significantly lower potential increases in direct PM fine emissions. As such, we believe that the impact for undergoing NSR review on these sources would be minimal, as described above.

For projects located in attainment areas, a situation similar to when a source is required to install controls for acid mist is expected. That is, when a source in an attainment area goes through NSR review for $PM_{2.5}$ as a result of a collateral increase due to the addition of CAIR controls, we expect the required control technology to be similar, if not identical, to those listed as available mitigation techniques for sources wanting to avoid NSR review. As such, we believe that the impact for undergoing NSR review on these sources would be minimal, as described above.

In conclusion, the Agency believes that the impacts of choosing to undertake NSR review for these units are not substantial enough to affect the CAIR highly cost-effective determination or the feasibility and timing analysis.

The EPA generally does not believe that the PCP requirements under NSR will pose a problem. This is because either companies will make control decisions that will not result in collateral pollution increases or the NSR process will not delay installation of pollution controls. Even if there were a small number of cases in which NSR requirements delayed control installations beyond the compliance dates for CAIR, EPA does not believe that this would change its conclusions about the cost effectiveness of the required emission reductions. The cost effectiveness is not significantly impacted because the trading mechanisms within CAIR provide flexibility if small numbers of sources are unable to install controls by the compliance deadlines.

## IV. Statutory and Executive Order Reviews

### *A. Executive Order 12866: Regulatory Planning and Review*

Under Executive Order 12866 (58 FR 51735, October 4, 1993), the Agency must determine whether the regulatory action is ''significant'' and, therefore, subject to Office of Management and Budget (OMB) review and the requirements of the Executive Order. The Order defines ''significant regulatory action'' as one that is likely to result in a rule that may:

(1) Have an annual effect on the economy of $100 million or more or adversely affect in a material way the economy, a sector of the economy, productivity, competition, jobs, the environment, public health or safety, or State, local, or tribal governments or communities;

(2) create a serious inconsistency or otherwise interfere with an action taken or planned by another agency;

(3) materially alter the budgetary impact of entitlements, grants, user fees, or loan programs or the rights and obligations of recipients thereof; or

(4) raise novel legal or policy issues arising out of legal mandates, the President's priorities, or the principles set forth in the Executive Order.

Pursuant to the terms of Executive Order 12866, OMB has determined that this is not a significant regulatory action. This notice takes comment on an aspect of the CAIR, but does not propose any modifications.

### *B. Paperwork Reduction Act*

This action does not propose information collection request requirements under the provisions of the Paperwork Reduction Act, 44 U.S.C. 3501 *et seq.* Therefore, an information collection request document is not required.

Burden means the total time, effort, or financial resources expended by persons to generate, maintain, retain, or disclose or provide information to or for a Federal agency. This includes the time needed to review instructions; develop, acquire, install, and utilize technology and systems for the purposes of collecting, validating, and verifying information, processing and maintaining information, and disclosing and providing information; adjust the existing ways to comply with any previously applicable instructions and requirements; train personnel to be able to respond to a collection of information; search data sources; complete and review the collection of information; and transmit or otherwise disclose the information.

An agency may not conduct or sponsor, and a person is not required to respond to a collection of information unless it displays a currently valid OMB control number. The OMB control numbers for EPA's regulations in 40 CFR are listed in 40 CFR part 9.

### *C. Regulatory Flexibility Act*

The Regulatory Flexibility Act generally requires an Agency to prepare a regulatory flexibility analysis of any rule subject to notice and comment rulemaking requirements under the Administrative Procedures Act or any other statute unless the Agency certifies the rule will not have a significant

economic impact on a substantial number of small entities. Small entities include small businesses, small organizations, and small governmental jurisdictions.

For purposes of assessing the impacts of today's proposed rule on small entities, small entity is defined as: (1) A small business that is a small industrial entity as defined in the U.S. Small Business Administration (SBA) size standards. (See 13 CFR part 121.); (2) a governmental jurisdiction that is a government of a city, county, town, school district or special district with a population of less than 50,000; and (3) a small organization that is any not-for-profit enterprise which is independently owned and operated and is not dominant in its field.

After considering the economic impacts of today's proposed rule on small entities, I certify that this action will not have a significant economic impact on a substantial number of small entities. This notice does not impose any requirements on small entities. We are only announcing our decision to reconsider and request comment on a specific issue in the CAIR. We continue to be interested in the potential impacts of the rule on small entities and welcome comments on issues related to such impacts.

*D. Unfunded Mandates Reform Act*

Title II of the Unfunded Mandates Reform Act of 1995 (UMRA), Public Law 104–4, establishes requirements for Federal agencies to assess the effects of their regulatory actions on State, local, and tribal governments and the private sector. Under section 202 of the UMRA, EPA generally must prepare a written statement, including a cost-benefit analysis, for proposed and final rules with ''Federal mandates'' that may result in expenditures by State, local, and tribal governments, in the aggregate, or by the private sector, of $100 million or more in any 1 year. Before promulgating an EPA rule for which a written statement is needed, UMRA section 205 generally requires EPA to identify and consider a reasonable number of regulatory alternatives and adopt the least costly, most cost-effective, or least-burdensome alternative that achieves the objectives of the rule. The provisions of section 205 do not apply when they are inconsistent with applicable law. Moreover, section 205 allows EPA to adopt an alternative other than the least-costly, most cost-effective, or least-burdensome alternative if the Administrator publishes with the final rule an explanation why that alternative was not adopted. Before EPA establishes any regulatory requirements that may significantly or uniquely affect small governments, including tribal governments, it must have developed, under section 203 of the UMRA, a small government agency plan. The plan must provide for notifying potentially affected small governments, enabling officials of affected small governments to have meaningful and timely input in the development of EPA's regulatory proposals with significant Federal intergovernmental mandates, and informing, educating, and advising small governments on compliance with the regulatory requirements.

The EPA has determined that today's notice of reconsideration does not contain a Federal mandate that may result in expenditures of $100 million or more for State, local, and tribal governments, in the aggregate, or the private sector in any 1 year. Today's notice of reconsideration of the CAIR does not add new requirements that would increase the cost of the CAIR. Thus, today's notice of reconsideration is not subject to the requirements of sections 202 and 205 of the UMRA. In addition, EPA has determined that today's notice of reconsideration does not significantly or uniquely affect small governments because it contains no requirements that apply to such governments or impose obligations upon them. Therefore, today's notice of reconsideration is not subject to section 203 of the UMRA.

*E. Executive Order 13132: Federalism*

Executive Order 13132, entitled ''Federalism'' (64 FR 43255, August 10, 1999), requires EPA to develop an accountable process to ensure ''meaningful and timely input by State and local officials in the development of regulatory policies that have federalism implications.'' ''Policies that have federalism implications'' is defined in the Executive Order to include regulations that have ''substantial direct effects on the States, on the relationship between the National Government and the States, or on the distribution of power and responsibilities among the various levels of government.''

This action does not have federalism implications. It would not have substantial direct effects on the States, on the relationship between the National Government and the States, or on the distribution of power and responsibilities among the various levels of government, as specified in Executive Order 13132. The CAA establishes the relationship between the Federal Government and the States, and this action would not impact that relationship. Thus, Executive Order 13132 does not apply to this action.

*F. Executive Order 13175: Consultation and Coordination With Indian Tribal Governments*

Executive Order 13175, entitled ''Consultation and Coordination with Indian Tribal Governments'' (65 FR 67249, November 9, 2000), requires EPA to develop an accountable process to ensure ''meaningful and timely input by Tribal officials in the development of regulatory policies that have Tribal implications.''

For the same reasons stated in the final CAIR, today's notice does not have tribal implications as defined by Executive Order 13175. It does not have a substantial direct effect on one or more Indian Tribes, since no tribe has implemented a federally-enforceable air quality management program under the CAA at this time. Furthermore, this action does not affect the relationship or distribution of power and responsibilities between the Federal Government and Indian Tribes. The CAA and the Tribal Air Rule establish the relationship of the Federal Government and tribes in developing plans to attain the NAAQS, and today's notice does nothing to modify that relationship. Because this notice does not have tribal implications, Executive Order 13175 does not apply.

If one assumes a tribe is implementing a tribal implementation plan, the CAIR could have implications for that tribe, but it would not impose substantial direct costs upon the tribe, nor would it preempt tribal Law.

Although Executive Order 13175 does not apply to the CAIR or this notice of reconsideration of the CAIR, EPA consulted with tribal officials in developing the CAIR.

*G. Executive Order 13045: Protection of Children From Environmental Health and Safety Risks*

Executive Order 13045: ''Protection of Children From Environmental Health and Safety Risks'' (62 FR 19885, April 23, 1997) applies to any rule that (1) is determined to be ''economically significant'' as defined under Executive Order 12866, and (2) concerns an environmental health or safety risk that EPA has reason to believe may have disproportionate effect on children. If the regulatory action meets both criteria, the Agency must evaluate the environmental health or safety effects of the planned rule on children, and explain why the planned regulation is preferable to other potentially effective and reasonably feasible alternatives considered by the Agency.

This notice is not subject to Executive Order 13045 because it does not involve decisions on environmental health risks or safety risks that may disproportionately affect children. The EPA believes that the emissions reductions from the CAIR will further improve air quality and children's health.

*H. Executive Order 13211: Actions That Significantly Affect Energy Supply, Distribution, or Use*

This rule is not subject to Executive Order 13211, ''Actions Concerning Regulations That Significantly Affect Energy Supply, Distribution, or Use'' (66 FR 28355 (May 22, 2001)) because it is not a significant regulatory action under Executive Order 12866.

*I. National Technology Transfer Advancement Act*

Section 12(d) of the National Technology Transfer Advancement Act of 1995, Public Law 104–113, section 12(d) (15 U.S.C. 272 note) directs EPA to use voluntary consensus standards in its regulatory activities unless to do so would be inconsistent with applicable law or otherwise impractical. Voluntary consensus standards are technical standards (*e.g.*, materials specifications, test methods, sampling procedures, and business practices) that are developed or adopted by voluntary consensus standards bodies. The National Technology Transfer Advancement Act of 1995 directs EPA to provide Congress, through OMB, explanations when the Agency decides not to use available and applicable voluntary consensus standards.

Today's notice does not involve technical standards. Therefore, the National Technology Transfer and Advancement Act of 1995 does not apply.

*J. Executive Order 12898: Federal Actions To Address Environmental Justice in Minority Populations and Low-Income Populations*

Executive Order 12898, ''Federal Actions to Address Environmental Justice in Minority Populations and Low-Income Populations,'' requires Federal agencies to consider the impact of programs, policies, and activities on minority populations and low-income populations. According to EPA guidance,[17] agencies are to assess whether minority or low-income populations face risks or a rate of exposure to hazards that are significant and that ''appreciably exceed or is likely to appreciably exceed the risk or rate to the general population or to the appropriate comparison group.'' (EPA, 1998).

In accordance with Executive Order 12898, the Agency has considered whether the CAIR may have disproportionate negative impacts on minority or low income populations. The EPA expects the CAIR to lead to reductions in air pollution and exposures generally. Therefore, EPA concluded that negative impacts to these sub-populations that appreciably exceed similar impacts to the general population are not expected. For the same reasons, EPA is drawing the same conclusion for today's notice to reconsider a certain aspect of the CAIR.

**List of Subjects**

*40 CFR Part 51*

Administrative practice and procedure, Air pollution control, Intergovernmental relations, Nitrogen oxides, Ozone, Particulate matter, Regional haze, Reporting and recordkeeping requirements, Sulfur dioxide.

*40 CFR Part 96*

Administrative practice and procedure, Air pollution control, Electric utilities, Nitrogen oxides, Reporting and recordkeeping requirements, Sulfur dioxide.

Dated: December 22, 2005.

**Stephen L. Johnson,**

*Administrator.*

[FR Doc. 05–24609 Filed 12–28–05; 8:45 am]

BILLING CODE 6560–50–P

[17] U.S. Environmental Protection Agency, 1998. Guidance for Incorporating Environmental Justice Concerns in EPA's NEPA Compliance Analyses. Office of Federal Activities, Washington, DC, April, 1998.

---

## ENVIRONMENTAL PROTECTION AGENCY

## 40 CFR Part 52

**[EPA–R05–OAR–2004–MI–0001; FRL–8016–4]**

## Approval and Promulgation of Implementation Plans; Michigan

**AGENCY:** Environmental Protection Agency (EPA).

**ACTION:** Proposed rule.

**SUMMARY:** The EPA is proposing to partially approve and partially disapprove revisions to the Michigan State Implementation Plan (SIP). These revisions were submitted to the EPA by the Michigan Department of Environmental Quality (MDEQ) on April 3, 2003, May 28, 2003, September 17, 2004, October 25, 2004 and June 8, 2005. The following sections of Michigan's rules are affected: Part 3: Emission Limitations and Prohibitions—Particulate Matter; Part 4: Emission Limitations and Prohibitions—Sulfur-bearing Compounds; Part 6: Emission Limitations and Prohibitions—Existing Sources of Volatile Organic Compound Emissions; Part 7: Emission Limitations and Prohibitions—New Sources of Volatile Organic Compound Emissions; Part 9: Emission Limitations and Prohibitions—Miscellaneous; Part 10: Intermittent Testing and Sampling; and Part 11: Continuous Emission Monitoring. The revisions are primarily administrative changes and minor corrections.

**DATES:** Comments must be received on or before January 30, 2006.

**ADDRESSES:** Submit comments, identified by Docket ID No. EPA–R05–OAR–2004–MI–0001, by one of the following methods:

- *http://www.regulations.gov:* Follow the on-line instructions for submitting comments.
- *E-mail: mooney.john@epa.gov.*
- *Fax*: (312) 886–5824.
- *Mail:* John M. Mooney, Chief, Criteria Pollutant Section, (AR–18J), U.S. Environmental Protection Agency, 77 West Jackson Boulevard, Chicago, Illinois 60604.
- *Hand Delivery:* John M. Mooney, Chief, Criteria Pollutant Section, (AR–18J), U.S. Environmental Protection Agency, 77 West Jackson Boulevard, 18th floor, Chicago, Illinois 60604. Such deliveries are only accepted during the Regional Office's normal hours of operation, and special arrangements should be made for deliveries of boxed information. The Regional Office's official hours of business are Monday through Friday, 8:30 a.m. to 4:30 p.m. excluding Federal holidays.

*Instructions:* Direct your comments to Docket ID No. EPA–R05–OAR–2004–MI–0001. EPA's policy is that all comments received will be included in the public docket without change and may be made available online at *http://www.regulations.gov*, including any personal information provided, unless the comment includes information claimed to be Confidential Business Information (CBI) or other information whose disclosure is restricted by statute. Do not submit information that you consider to be CBI or otherwise protected through *http://www.regulations.gov* or e-mail. The *http://www.regulations.gov* Web site is an ''anonymous access'' system, which means EPA will not know your identity or contact information unless you

provide it in the body of your comment. If you send an e-mail comment directly to EPA without going through *http://www.regulations.gov* your e-mail address will be automatically captured and included as part of the comment that is placed in the public docket and made available on the Internet. If you submit an electronic comment, EPA recommends that you include your name and other contact information in the body of your comment and with any disk or CD ROM you submit. If EPA cannot read your comment due to technical difficulties and cannot contact you for clarification, EPA may not be able to consider your comment. Electronic files should avoid the use of special characters, any form of encryption, and be free of any defects or viruses. For additional instructions on submitting comments, go to Section I of the **SUPPLEMENTARY INFORMATION** section of this document.

*Docket:* All documents in the electronic docket are listed in the *http://www.regulations.gov* index. Although listed in the index, some information is not publicly available, e.g., CBI or other information whose disclosure is restricted by statute. Certain other material, such as copyrighted material, will be publicly available only in hard copy. Publicly available docket materials are available either electronically in *http://www.regulations.gov* or in hard copy at the Environmental Protection Agency, Region 5, Air and Radiation Division, 77 West Jackson Boulevard, Chicago, Illinois 60604. This Facility is open from 8:30 a.m. to 4:30 p.m., Monday through Friday, excluding legal holidays. We recommend that you telephone Kathleen D'Agostino, Environmental Engineer, at (312) 886–1767 before visiting the Region 5 office.

**FOR FURTHER INFORMATION CONTACT:**

Kathleen D'Agostino, Environmental Engineer, Criteria Pollutant Section, Air Programs Branch (AR–18J), Environmental Protection Agency, Region 5, 77 West Jackson Boulevard, Chicago, Illinois 60604, (312) 886–1767, *dagostino.kathleen@epa.gov*.

**SUPPLEMENTARY INFORMATION:**

Throughout this document whenever ''we,'' ''us,'' or ''our'' is used, we mean EPA. This supplementary information section is arranged as follows:

I. What Should I Consider as I Prepare My Comments for EPA?
II. What Has Michigan Submitted?
III. Did Michigan Hold a Public Hearing?
IV. What Is EPA's Evaluation of the State Submittal?
V. What Actions Is EPA Taking?
VI. Statutory and Executive Order Reviews

## I. What Should I Consider as I Prepare My Comments for EPA?

### *A. Submitting CBI*

Do not submit this information to EPA through *http://www.regulations.gov* or e-mail. Clearly mark the part or all of the information that you claim to be CBI. For CBI information in a disk or CD ROM that you mail to EPA, mark the outside of the disk or CD ROM as CBI and then identify electronically within the disk or CD ROM the specific information that is claimed as CBI). In addition to one complete version of the comment that includes information claimed as CBI, a copy of the comment that does not contain the information claimed as CBI must be submitted for inclusion in the public docket. Information so marked will not be disclosed except in accordance with procedures set forth in 40 CFR part 2.

### *B. Tips for Preparing Your Comments*

When submitting comments, remember to:

- Identify the rulemaking by docket number and other identifying information (subject heading, **Federal Register** date and page number).
- Explain why you agree or disagree; suggest alternatives and substitute language for your requested changes.
- Describe any assumptions and provide any technical information and/or data that you used.
- If you estimate potential costs or burdens, explain how you arrived at your estimate in sufficient detail to allow for it to be reproduced.
- Provide specific examples to illustrate your concerns, and suggest alternatives.
- Explain your views as clearly as possible, avoiding the use of profanity or personal threats.
- Make sure to submit your comments by the comment period deadline identified.

## II. What Has Michigan Submitted?

On April 3, 2003, May 28, 2003, September 17, 2004, October 25, 2004, and June 8, 2005 the Michigan Department of Environmental Quality (MDEQ) submitted revisions to the Michigan State Implementation Plan (SIP). These submissions revise the following sections of Michigan's Air Pollution Control Rules: R 336.1301, R 336.1303, R 336.1330, R 336.1331 except item C8 of Table 31, R 336.1358, R 336.1361, R 336.1362, R 336.1363, R 336.1371, R 336.1372, R 336.1374, R 336.1401, R 336.1403, R 336.1601, R 336.1602, R 336.1604 to R 336.1608, R 336.1615 to R 336.1619, R 336.1622, R 336.1623, R 336.1625, R 336.1627 to R 336.1631, R 336.1702, R 336.1705, R 336.1906, R 336.1911, R 336.1930, R 336.2001 to R 336.2005, R 336.2007, R 336.2011 to R 336.2014, R 336.2021, R 336.2040 except subrules (9) and (10), R 336.2041, R 336.2101, R 336.2150, R 336.2155, R 336.2159, R 336.2170, R 336.2175, R 336.2189, and R 336.2190. The revisions are primarily administrative changes and minor corrections.

## III. Did Michigan Hold a Public Hearing?

Michigan held public hearings on February 2, 2000, October 17, 2001 and December 2, 2004. No negative comments were submitted on the rule revisions.

## IV. What Is EPA's Evaluation of the State Submittal?

The following is a brief summary of the revisions and EPA's evaluation of them.

### *Part 3: Emission Limitations and Prohibitions—Particulate Matter*

R 336.1301, 1303, 1330, 1331 except C8 of Table 31, 1371, 1372, and 1374—The MDEQ made minor administrative revisions, e.g., changing terminology from ''commission'' to ''department.'' The revisions are approvable.

R 336.1358, R 336.1361, R 336.1362, R 336.1363—The MDEQ corrected a subsection reference in each of these rules. Reference test method 9 was said to be described in R 336.2004(1)(h) when the correct section was R 336.2004(1)(l). R 336.2004(h) describes test method 4. The corrections are approvable.

### *Part 4: Emission Limitations and Prohibitions—Sulfur-bearing Compounds*

R 336.1401 and 1403—The MDEQ made minor administrative revisions, e.g., changing terminology from ''commission'' to ''department.'' The revisions are approvable.

### *Part 6: Emission Limitations and Prohibitions—Existing Sources of Volatile Organic Compound Emissions*

R 336.1601—The MDEQ changed terminology from ''commission'' to ''department.'' The revision is approvable.

R 336.1602—Section 336.1602(2) requires department approvals of equivalent emission rates, alternate emission rates, and compliance methods reverenced in the section to be submitted to EPA as a SIP revision. The MDEQ changed references to rule R 336.1610 contained in this section to make them consistent with the version

of rule R 336.1610 currently applicable at the state level. The revisions to R 336.1610 have not been approved into the SIP and are not currently before EPA for review.[1] Therefore, by revising the references to rule R 336.1610, the references applicable to the SIP approved version of rule R 336.1610 would be eliminated. Approval of the revision to R 336.1602 would relax RACT in the current SIP approved version of R 336.1610 by eliminating the reference requiring alternate methods to be submitted to EPA as a SIP revision. This would effectively allow the State to alter the SIP without EPA review and approval (director's discretion). This is inconsistent with the requirements of the CAA and with RACT requirements as set forth in EPA policy guidance documents, including ''Issues Relating to VOC Regulation Cutpoints, Deficiencies and Deviations, Clarification to Appendix D of November 24, 1987 **Federal Register** Notice'' dated May 25, 1988. The revisions to this rule are not approvable.

R 336.1604 to 1608 and 1615 to 1618—The MDEQ made minor administrative revisions, e.g., changing terminology from ''commission'' to ''department.'' The revisions are approvable.

R 336.1619 and 1622—The MDEQ made minor administrative changes, e.g., updating the date of the CFR reference, updating the cost of ordering printed materials. The revisions are approvable.

R 336.1623 and 1627—The MDEQ made minor administrative revisions, e.g., changing terminology from ''commission'' to ''department.'' The revisions are approvable.

R 336.1625—The MDEQ revised the rule to read as follows: ''A person who is responsible for the operation of a synthesized pharmaceutical process subject to the provisions of this rule shall obtain current information and maintain records that are necessary for a determination of compliance with the provisions of this rule.'' This language is consistent with RACT requirements for synthesized pharmaceutical manufacturing contained in the control technology guideline and expressed in EPA's model VOC RACT rules. See Memorandum dated June 24, 1992, from G.T. Helms, Chief, Ozone/Carbon Monoxide Programs Branch, entitled ''Volatile Organic Compounds (VOC) Rules for Reasonably Available Control Technology (RACT).'' The MDEQ added the requirement to keep ''continuous records of the gas temperature of each condenser or of a parameter that insures proper operation of an equivalent control device used pursuant to subrule (2)(B) of this rule.'' The MDEQ also made minor administrative changes, e.g., changing terminology from ''commission'' to ''department.'' The revisions are approvable.

R 336.1628—The MDEQ made minor administrative changes, e.g., updating the date of the CFR reference, updating the cost of ordering printed materials. The revisions are approvable.

R 336.1629—The MDEQ made minor administrative changes, e.g., noting where in Michigan's rules American Society for Testing and Materials (ASTM) methods are adopted by reference. The revisions are approvable.

R 336.1630—The MDEQ made minor administrative revisions, e.g., changing terminology from ''commission'' to ''department.'' The revisions are approvable.

R 336.1631—The MDEQ made minor administrative revisions; e.g., changing terminology from ''commission'' to ''department'' and updating the name of a regulated company. The revisions are approvable.

*Part 7: Emission Limitations and Prohibitions—New Sources of Volatile Organic Compound Emissions*

R 336.1702 and 1705—The MDEQ made minor administrative revisions, e.g., changing terminology from ''commission'' to ''department.'' The revisions are approvable.

*Part 9: Emission Limitations and Prohibitions—Miscellaneous*

R 336.1906, 1911 and 1930—The MDEQ made minor administrative revisions, e.g., changing terminology from ''commission'' to ''department.'' The revisions are approvable.

*Part 10: Intermittent Testing and Sampling*

R 336.2001 to 2003—The MDEQ made minor administrative revisions, e.g., changing terminology from ''commission'' to ''department.'' The revisions are approvable.

R 336.2004—The MDEQ made minor administrative changes, e.g., updating the date of the CFR reference, updating the cost of ordering printed materials. The revisions are approvable.

R 336.2005—The MDEQ changed terminology from ''commission'' to ''department.'' The revision is approvable.

R 336.2007—The MDEQ included two schematic figures that were inadvertently omitted in earlier versions of the rule. The revisions are approvable.

R 336.2011—The MDEQ made minor administrative revisions, e.g., changing terminology from ''commission'' to ''department.'' The State also corrected an error in the nomenclature for the calculations. Specifically, the equation defining $C_S$ was corrected to read '' $C_S$ = Concentration of particulate matter in stack gas, pounds per 1,000 pounds of actual stack gas.'' The revisions are approvable.

R 336.2012 to 2014—The MDEQ made minor administrative revisions, e.g., changing terminology from ''commission'' to ''department.'' The revisions are approvable.

R 336.2021—The MDEQ removed figures 101 and 105. Rule 336.2010, the only rule referring to these figures, was rescinded by the state and removed from the SIP. These revisions are approvable.

R 336.2040—The MDEQ made minor administrative revisions, e.g., changing terminology from ''commission'' to ''department.'' The revisions are approvable.

R 336.2041—There are multiple problems with this rule. The MDEQ added language to subrule (1) that allows the State to alter the SIP without submitting these changes to EPA for approval. This is inconsistent with the CAA and with RACT requirements as set forth in EPA policy guidance documents, including ''Issues Relating to VOC Regulation Cutpoints, Deficiencies and Deviations, Clarification to Appendix D of November 24, 1987 **Federal Register** Notice'' dated May 25, 1988. The MDEQ also changed references to rule R 336.1610 to reflect revisions to that rule. However, as discussed above, the revisions to R 336.1610 have not been approved into the SIP and are not approvable because they would relax RACT requirements. Also, the rewording of several subparts is confusing. This rule is not approvable.

*Part 11: Continuous Emission Monitoring*

R 336.2101—The MDEQ made minor administrative revisions, e.g., changing ''commission'' to ''department.'' The revisions are approvable.

R 336.2150—The MDEQ updated CFR citations from 1983 to 2000 and made minor administrative revisions, e.g., changing terminology from ''department of natural resources'' to ''department of environmental quality.'' The revisions are approvable.

R 336.2155—The MDEQ changed terminology from ''commission'' to

[1] It should be noted that the revisions would not be approvable because they would relax the Reasonably Available Control Technology (RACT) level of controls on Volatile Organic Compounds (VOC) required by the Clean Air Act (CAA). See Sections 182(a)(2)(A) and 182(b)(2).

''department.'' The revision is approvable.

R 336.2159—The MDEQ made minor administrative revisions, e.g., changing terminology from ''commission'' to ''department.'' The revisions are approvable.

R 336.2170—The MDEQ made minor administrative revisions, e.g., changing terminology from ''commission'' to ''department.'' The revisions are approvable.

R 336.2175—The MDEQ made minor administrative revisions, e.g., changing terminology from ''commission'' to ''department.'' The revisions are approvable.

R 336.2189—The MDEQ made minor administrative revisions, e.g., changing terminology from ''commission'' to ''department.'' The revisions are approvable.

R 336.2190—The MDEQ changed terminology from ''commission'' to ''department.'' The revision is approvable.

## V. What Actions Is EPA Taking?

To determine the approvability of a rule, EPA must evaluate the rule for consistency with the requirements of the CAA, EPA regulations and the EPA's interpretation of these requirements as expressed in EPA policy guidance documents. Rules R 336.1602 and R 336.2041 are inconsistent with the CAA and the applicable policies by which EPA must evaluate submittals, including, ''Issues Relating to VOC Regulation Cutpoints, Deficiencies and Deviations, Clarification to Appendix D of November 24, 1987 **Federal Register** Notice'' dated May 25, 1988. Therefore, EPA is proposing to disapprove rules R 336.1602 and R 336.2041. EPA is proposing to approve the remainder of the rules.

## VI. Statutory and Executive Order Reviews

*Executive Order 12866; Regulatory Planning and Review*

Under Executive Order 12866 (58 FR 51735, October 4, 1993), this action is not a ''significant regulatory action'' and therefore is not subject to review by the Office of Management and Budget.

*Paperwork Reduction Act*

This proposed rule does not impose an information collection burden under the provisions of the Paperwork Reduction Act of 1995 (44 U.S.C. 3501 et seq.).

*Regulatory Flexibility Act*

This proposed action merely proposes to approve state law as meeting Federal requirements and imposes no additional requirements beyond those imposed by state law. Accordingly, the Administrator certifies that this proposed rule will not have a significant economic impact on a substantial number of small entities under the Regulatory Flexibility Act (5 U.S.C. 601 et seq.).

*Unfunded Mandates Reform Act*

Because this rule proposes to approve pre-existing requirements under state law and does not impose any additional enforceable duty beyond that required by state law, it does not contain any unfunded mandate or significantly or uniquely affect small governments, as described in the Unfunded Mandates Reform Act of 1995 (Pub. L. 104–4).

*Executive Order 13132 Federalism*

This action also does not have Federalism implications because it does not have substantial direct effects on the states, on the relationship between the national government and the states, or on the distribution of power and responsibilities among the various levels of government, as specified in Executive Order 13132 (64 FR 43255, August 10, 1999). This action merely proposes to approve a state rule implementing a federal standard, and does not alter the relationship or the distribution of power and responsibilities established in the Clean Air Act.

*Executive Order 13175 Consultation and Coordination With Indian Tribal Governments*

This proposed rule also does not have tribal implications because it will not have a substantial direct effect on one or more Indian tribes, on the relationship between the Federal government and Indian tribes, or on the distribution of power and responsibilities between the Federal government and Indian tribes, as specified by Executive Order 13175 (65 FR 67249, November 9, 2000).

*Executive Order 13045 Protection of Children From Environmental Health and Safety Risks*

This proposed rule also is not subject to Executive Order 13045 ''Protection of Children from Environmental Health Risks and Safety Risks'' (62 FR 19885, April 23, 1997), because it is not economically significant.

*Executive Order 13211 Actions That Significantly Affect Energy Supply, Distribution, or Use*

Because it is not a ''significant regulatory action'' under Executive Order 12866 or a ''significant energy action,'' this action is also not subject to Executive Order 13211, ''Actions Concerning Regulations That Significantly Affect Energy Supply, Distribution, or Use'' (66 FR 28355, May 22, 2001).

*National Technology Transfer Advancement Act*

Section 12(d) of the National Technology Transfer and Advancement Act of 1995 (NTTA), 15 U.S.C. 272, requires Federal agencies to use technical standards that are developed or adopted by voluntary consensus to carry out policy objectives, so long as such standards are not inconsistent with applicable law or otherwise impracticable. In reviewing program submissions, EPA's role is to approve state choices, provided that they meet the criteria of the Act. Absent a prior existing requirement for the state to use voluntary consensus standards, EPA has no authority to disapprove a program submission for failure to use such standards, and it would thus be inconsistent with applicable law for EPA to use voluntary consensus standards in place of a program submission that otherwise satisfies the provisions of the Act. Therefore, the requirements of section 12(d) of the NTTA do not apply.

## List of Subjects in 40 CFR Part 52

Environmental protection, Air pollution control, Intergovernmental relations, Ozone, Reporting and recordkeeping requirements, Volatile organic compounds.

Dated: December 9, 2005.

**Bharat Mathur,**

*Acting Regional Administrator, Region 5.*

[FR Doc. E5–8036 Filed 12–28–05; 8:45 am]

BILLING CODE 6560–50–P

---

## ENVIRONMENTAL PROTECTION AGENCY

## 40 CFR Part 63

**[OAR–2003–0138, FRL–8017–4]**

**RIN 2060–AM77**

## National Emission Standards for Hazardous Air Pollutants: Organic Liquids Distribution (Non-Gasoline)

**AGENCY:** Environmental Protection Agency (EPA).

**ACTION:** Proposed rule; extension of public comment period.

**SUMMARY:** On November 14, 2005, at 70 FR 69210, EPA proposed amendments to the ''National Emission Standards for Hazardous Air Pollutants for Organic Liquids Distribution (Non-Gasoline)''

and provided a 45-day public comment period. Written comments on the proposed rule amendments were to be submitted to the EPA on or before December 29, 2005. We have received requests asking for an extension of the public comment period. In consideration of these concerns, the EPA is extending the comment period by 21 days (until January 19, 2006).

**DATES:** Comments must be received on or before January 19, 2006.

**ADDRESSES:** Submit your comments, identified by Docket ID No. EPA–HQ–OAR–2003–0138, by one of the following methods:

- *http://www.regulations.gov:* Follow the on-line instructions for submitting comments.
- Email: *a-and-r-docket@epamail.epa.gov.*
- Fax: (202) 566–1741.
- Mail: Air and Radiation Docket and Information Center (6102), Attention: Docket ID No. EPA–HQ–OAR–2003–0138, U.S. Environmental Protection Agency, 1200 Pennsylvania Avenue, NW., Washington, DC 20460. Please include a total of two (2) copies. The EPA requests that a separate copy be sent to the contact person listed under the **FOR FURTHER INFORMATION CONTACT** section.

*Instructions:* Direct your comments to Docket ID No. EPA–HQ–OAR–2003–0138. EPA's policy is that all comments received will be included in the public docket without change and may be made available online at *http://www.regulations.gov,* including any personal information provided, unless the comment includes information claimed to be Confidential Business Information (CBI) or other information whose disclosure is restricted by statute. Do not submit information that you consider to be CBI or otherwise protected through *http://www.regulations.gov* or e-mail. The *http://www.regulations.gov* Web site is an ''anonymous access'' system, which means EPA will not know your identity or contact information unless you provide it in the body of your comment. If you send an e-mail comment directly to EPA without going through *http://www.regulations.gov* your e-mail address will be automatically captured and included as part of the comment that is placed in the public docket and made available on the Internet. If you submit an electronic comment, EPA recommends that you include your name and other contact information in the body of your comment and with any disk or CD ROM you submit. If EPA cannot read your comment due to technical difficulties and cannot contact you for clarification, EPA may not be able to consider your comment. Electronic files should avoid the use of special characters, any form of encryption, and be free of any defects or viruses.

*Docket:* All documents in the docket are listed in the *http://www.regulations.gov* index. Although listed in the index, some information is not publicly available, e.g., CBI or other information whose disclosure is restricted by statute. Certain other material, such as copyrighted material, will be publicly available only in hard copy. Publicly available docket materials are available either electronically in *http://www.regulations.gov* or in hard copy at the Docket, EPA/DC, EPA West, Room B102, 1301 Constitution Avenue, NW., Washington, DC. This Docket Facility is open from 8:30 a.m. to 4:30 p.m., Monday through Friday, excluding legal holidays. The Docket telephone number is (202) 566–1742. The Public Reading Room is open from 8:30 a.m. to 4:30 p.m., Monday through Friday, excluding legal holidays. The telephone number for the Public Reading Room is (202) 566–1744, and the telephone number for the Air and Radiation Docket is (202) 566–1742.

*Submitting CBI:* Do not submit this information to EPA through *http://www.regulations.gov* or e-mail. Clearly mark the part or all of the information that you claim to be CBI. For CBI information in a disk or CD ROM that you mail to EPA, mark the outside of the disk or CD ROM as CBI and then identify electronically within the disk or CD ROM the specific information that is claimed as CBI. In addition to one complete version of the comment that includes information claimed as CBI, a copy of the comment that does not contain the information claimed as CBI must be submitted for inclusion in the public docket. Information so marked will not be disclosed except in accordance with procedures set forth in 40 CFR part 2.

**FOR FURTHER INFORMATION CONTACT:** Ms. Martha Smith, Waste and Chemical Processes Group, Emission Standards Division (C439–03), U.S. Environmental Protection Agency, Research Triangle Park, North Carolina 27711, telephone number (919) 541–2421, fax number (919) 541–0246, email address: *smith.martha@epa.gov.*

**SUPPLEMENTARY INFORMATION:** The Organic Liquids Distribution rule was issued on February 3, 2004 (69 FR 5038). On November 14, 2005, at 70 FR 69210, EPA proposed amendments to the ''National Emission Standards for Hazardous Air Pollutants for Organic Liquids Distribution (Non-Gasoline)'' and provided a 45-day public comment period. Written comments on the proposed rule amendments were to be submitted to the EPA on or before December 29, 2005 (a 45-day public comment period). Requests have been received asking for an extension of the public comment period beyond the 45 days originally provided. These requests have been made by businesses that will be affected by the proposed rule amendments. Their request for this extension is based on the fact that Thanksgiving and Christmas holidays occur during the comment period which would cause hardship on their ability to provide timely and useful comments. In consideration of these concerns, the EPA is extending the comment period by 21 days (until January 19, 2006) in order to give all interested persons the opportunity to comment fully.

Dated: December 22, 2005.

**William L. Wehrum,**

*Acting Assistant Administrator for Air and Radiation.*

[FR Doc. E5–8039 Filed 12–28–05; 8:45 am]

BILLING CODE 6560–50–P

# Notices

Federal Register

Vol. 70, No. 249

Thursday, December 29, 2005

This section of the FEDERAL REGISTER contains documents other than rules or proposed rules that are applicable to the public. Notices of hearings and investigations, committee meetings, agency decisions and rulings, delegations of authority, filing of petitions and applications and agency statements of organization and functions are examples of documents appearing in this section.

## DEPARTMENT OF AGRICULTURE

### Foreign Agricultural Service

### Trade Adjustment Assistance for Farmers

**AGENCY:** Foreign Agricultural Service, USDA.

**ACTION:** Notice.

The Administrator, Foreign Agricultural Service (FAS), approved a petition for trade adjustment assistance (TAA) that was filed on November 16, 2005, by a group of avocado producers in Florida. The certification date is December 29, 2005. Beginning on January 2, 2006, Florida avocado producers will be eligible to apply for fiscal year 2006 benefits during an application period ending April 3, 2006.

**SUPPLEMENTARY INFORMATION:** Upon investigation, the Administrator determined that increased imports of avocados contributed importantly to a decline in producer prices of avocados in Florida by 36.1 percent during June 2004 through May 2005, when compared with the previous 5-year average.

Eligible producers must apply to the Farm Service Agency for benefits. After submitting completed applications, producers shall receive technical assistance provided by the Extension Service at no cost and may receive an adjustment assistance payment, if certain program criteria are satisfied. Applicants must obtain the technical assistance from the Extension Service by September 29, 2005, in order to be eligible for financial payments.

Producers of raw agricultural commodities wishing to learn more about TAA and how they may apply should contact the Department of Agriculture at the addresses provided below for General Information.

*Producers Certified as Eligible for TAA, Contact:* Farm Service Agency service centers in Florida.

*For General Information about TAA, Contact:* Jean-Louis Pajot, Coordinator, Trade Adjustment Assistance for Farmers, FAS, USDA, (202) 720–2916, e-mail: *trade.adjustment@fas.usda.gov.*

Dated: December 16, 2005.

**W. Kirk Miller,**

*Acting Administrator, Foreign Agricultural Service.*

[FR Doc. E5–8004 Filed 12–28–05; 8:45 am]

**BILLING CODE 3410–10–P**

## DEPARTMENT OF AGRICULTURE

### Forest Service

### Caribou-Targhee National Forest, Caribou County, ID, Smoky Canyon Mine Panels F and G Project

**AGENCY:** Forest Service, USDA.

**ACTION:** Revision of the Notice of Intent to prepare an Environmental Impact Statement for the Smoky Canyon Mine, Panels F and G Project, as published in the **Federal Register** page 53998 to 53999 on September 15, 2003 (Vol. 68, No. 178). This revision includes a change of project schedule.

**SUMMARY:** The USDA, Forest Service, DOI, Bureau of Land Management and Idaho Department of Environmental Quality are preparing an Environmental Impact Statement to document the analysis and disclose the environmental impacts of the proposed Smoky Canyon Mine, Panels F and G Project, a phosphate mine expansion. This revised Notice of Intent is to document some changes in the schedule.

In the original NOI, the tentative date for filing the Draft EIS was March of 2005 and the Final EIS was scheduled for September, 2005. Due to scheduling changes, the Draft EIS is now expected to be available for review in December, 2005. The final EIS is scheduled to be completed in July, 2006.

Plans have been developed and submitted for agency review for an extension of open pit mining operations at the J.R. Simplot Company (Simplot) Smoky Canyon Phosphate Mine in Canyon County, Idaho, located approximately 20 miles west of Afton, Wyoming. Simplot has operated existing Smoky Canyon Mine since 1983 and within a few years will complete mining of currently permitted reserves.

*Agency Decisions:* The BLM Idaho State Director or delegated official will make a decision regarding approval of the proposed mine and reclamation plan and appropriate land use authorizations (including a proposed 520 acre modification to I–27512 and up to a 100 acre modification to I–01441) on leased lands. Decisions will be based on the EIS and any recommendations the FS may have regarding surface management of leased National Forest System lands. The Caribou-Targhee National Forest Supervisor makes recommendations to the BLM concerning surface management and mitigation on leased lands within the Caribou-Targhee National Forest and makes decisions on mine-related activities which occur off-lease. The Army Corps of Engineers may also make decisions related to permits under section 404 of the Clean Water Act.

**DATES:** A draft EIS is expected to be completed by the end of December 2005. A final EIS is expected in July of 2006.

Scoping Procedure: The scoping procedure used for this EIS involved: Notification in **Federal Register**; a mailing to interested and potentially affected individuals, groups, Federal, State and local government entities eliciting comments, issues and concerns; local news releases or newspaper legal notices; and public scoping meetings.

**ADDRESSES:** Send written comments to: Smoky Canyon Mine DEIS, c/o The Shipley Group, PO Box 2000, Bountiful, UT 84011–2000. E-mail: *scm__deis@contentanalysisgroup.com.*

**FOR FURTHER INFORMATION CONTACT:** Bill Stout, Bureau of Land Management, Pocatello Field Office, 4350 Cliffs Drive, Pocatello, Idaho 83204, phone (208) 478–6340; or Scott Gerwe, Caribou-Targhee National Forest, Soda Springs Ranger District, 410 E. Hooper Ave., Soda Springs, Idaho 83276, phone (208) 547–4356, Information is also available at *http://www.blm.gov/nhp/spotlight/state_info/planning.htm.*

**SUPPLEMENTARY INFORMATION:** The proposed new extension of mining operations in Panels F and G lie within the Caribou-Targhee National Forest on lands administered by the FS and Federal mineral leases administered by the BLM. Mining as proposed would take place on Panels F and G, including lease modifications (enlargement) of leases I–27512 and I–01441. These

existing Federal mineral leases are adjacent to the southwest portion of the existing mine and were previously issued to Simplot by competitive bid in January of 2001 and October of 1950 respectively. Environmental impacts of the proposed mining operations and reasonable alternatives will be analyzed in the EIS. Appropriate mitigation measures will also be formulated.

The proposed mining activities consist of two open pits—Panel F on Federal phosphate lease I–27512 (sometimes referred to as the Manning Creek lease) and Panel G on Federal phosphate lease I–01441 (sometimes referred to as the Deer Creek lease), topsoil stockpiles, mine equipment parking and service areas, access and haul roads, a power line extension from the existing Smoky Canyon loop, permanent external overburden storage areas, and runoff/sediment control facilities. A new haul/access road to transport ore to the existing Smoky Canyon mill is proposed to be constructed from the south end of the existing Panel E approximately 2.5 miles to the proposed Panel F. As operations move south to Panel G, another haul road is proposed to transport ore 7.8 miles from Panel G north to Panel F. Much of these activities are proposed to occur within the FS Sage Creek inventoried roadless area.

As proposed, the existing Smoky Canyon Mine, maintenance, administrative, and milling facilities would continue to be used. However, because G panel lies several miles south of the currently existing maintenance and fuel facilities, Simplot's plans propose mine support facilities at the new panels including: Equipment ready lines, electrical substations, warehouse and storage areas, lunch rooms, repair shops, restrooms, fuel and lubricant storage and dispensing facilities and blasting supplies.

Ore from the new panels would be hauled in trucks over new and existing haul/access roads to the existing Smoky Canyon mill facilities to be concentrated. Ore concentrate from the mill would be transported to the Simplot fertilizer plant in Pocatello, Idaho via the existing slurry pipeline system. Mill tailings would continue to be deposited in the currently approved and permitted tailings disposal facilities located on Simplot property east of the mill.

Initially, overburden generated from Panel F would be trucked to the existing Panel E open pit and used as backfill. Excess waste rock is proposed to be permanently placed in a 35-acre pit overfill on-lease. Remaining overburden from Panel F would then be placed as backfill in Panel F as soon as practical. Overburden generated from mining Panel G would be permanently placed in 138 acres of external overburden fills on-lease at Panel G as well as backfill in the Panel G open pit.

Disturbed lands directly resulting from the proposed activities total about 1,340 acres. New pits would disturb approximately 763 acres of which approximately 796 acres would be backfilled and reclaimed. Forty-six acres of highwall and pit bottoms would remain after reclamation is complete. The remaining 23 acres of the Panel E (currently approved and active) open pit would also be backfilled with overburden from Panel F. This pit is currently permitted to be left open. The rest of the disturbed acreage would consist of approximately 284 acres of roads, 176 acres of overburden disposal areas, and 117 acres of runoff management facilities, water monitoring facilities, and topsoil piles. Each would be reclaimed. The FS Sage Creek inventoried roadless area overlaps large portions of the proposed mine and haul road disturbance areas.

Potential impacts to surface resources and water quality include erosion, sediment, and dissolved contaminants such as selenium. Simplot has proposed to implement practices designed to reduce, eliminate, or mitigate these impacts. Suitable topsoil would be salvaged from disturbed areas for use in reclamation. Reclamation of mining disturbances include: removal of facilities and equipment, backfilling pits, regrading slopes, restoring drainages, spreading topsoil, stabilizing surfaces, revegetation, testing and treatment for remaining hydrocarbon contaminants and environmental monitoring.

Simplot has applied for two lease modifications to expand Federal Phosphate Lease I–27512 for the Panel F operations. They are a smaller 120-acre lease modification on the northern edge of the lease and a larger 400-acre modification on the southern edge of the lease. The proposed northern lease modifications would be included in all action alternatives. The issuance and mining of a southern lease modification would be evaluated as a separate alternative. Simplot will likely apply for another lease modification to enlarge lease I–01441 to accommodate 18 acres of off-lease external overburden fill. Environmental impacts of mining operations within the lease modifications will be analyzed in this EIS.

Issues initially identified for the proposed mining of F and G panels include potential effects on: ground water and surface water quantity and quality, wildlife and their habitats; livestock grazing, wetlands and riparian habitat, socio-economics, FS inventoried roadless areas, visual resources, and cumulative effects.

At this early stage, the BLM and FS believe that it is important to give reviewers notice of several court rulings related to public participation in the environmental review process. First, reviewers of draft EISs must structure their participation in the environmental review of the proposal to be meaningful and alert an agency to reviewer's position and contentions. *Vermont Yankee Nuclear Power Corp.* v. *NRDC*, 435 U.S. 518,553 (1978). Also, environmental objections that could be raised at the draft EIS stage but are not raised until after completion of the final EIS may be waived or dismissed by the courts. *City of Angoon* v. *Hodel,* 803 F. 2d 1016, 1022 (9th Cir. 1986) and *Wisconsin Heritages, Inc.* v. *Harris,* 490 F. Supp. 1334, 1338 (E.D. Wis. 1980). Due to these court rulings, it is very important that those interested in this proposed action participate by the close of the 60-day comment period for the draft EIS. This is necessary so that substantive comments and objections are made available to the BLM and FS at a time when they can meaningfully consider them and respond to them in the final EIS.

**Possible Alternatives**

The EIS will analyze the Proposed Action with and without issuing a lease modification on the southern margin of Panel F operations, alternative access/haul road alignment to access the Panel G operations and the No Action Alternative. Other alternatives may include: Additional access and haul road designs, use of conveyors to transport ore to the existing mill, revising the layout or sequencing of the proposed mining facilities, different methods for reducing impacts from overburden handling, and other alternatives that could provide mitigation for impacts.

**Tentative EIS Project Schedule**

The tentative project schedule is as follows:

- Estimated date for Draft EIS: December 2005.
- Public Comment Period on Draft EIS: 60 days from when the Notice of Availability is published in the **Federal Register**.
- Final EIS Publication: July 2006.
- Decision: August 2006.

**Public Scoping Meetings**

At least three public meetings will be held. Each will be the open house type. The open houses will include displays explaining the project and provide a forum for commenting on the project. Meetings are currently planned for Pocatello and Soda Springs, Idaho and Afton, Wyoming. The dates, times, and locations of the public scoping meetings will be announced in mailings and public notices issued by the BLM or may be obtained from Bill Stout, Bureau of Land Management, Pocatello Field Office, 4350 Cliffs Drive, Pocatello, Idaho 83204, or *http://www.blm.gov/nhp/spotlight/state_info/planning.htm*, phone (208) 478–6367.

**Public Input Requested**

The BLM and FS are seeking information and written comments from Federal, State and local agencies as well as individuals and organizations interested in, or affected by, the Proposed Action or Alternatives. To assist the BLM and FS in identifying issues and concerns related to the Proposed Action or Alternatives, comments for the Draft EIS, should be as specific as possible.

Dated: December 21, 2005.

**Sheryl Bainbridge,**

*Acting Forest Supervisor, Caribou-Targhee National Forest.*

[FR Doc. 05–24574 Filed 12–28–05; 8:45 am]

BILLING CODE 3410–11–M

## DEPARTMENT OF AGRICULTURE

### Forest Service

### Eastern Washington Cascades Provincial Advisory Committee and the Yakima Provincial Advisory Committee

**AGENCY:** Forest Service, USDA.

**ACTION:** Notice of meeting.

**SUMMARY:** The Eastern Washington Cascades Provincial Advisory Committee and the Yakima Provincial Advisory Committee will meet on Wednesday, January 25, 2006 at the Okanogan and Wenatchee National Forests headquarters office, 215 Melody Lane, Wenatchee, Washington. The meeting will begin at 9 a.m. and continue until 3 p.m. During this meeting we will share information on Roadless area considerations in the Okanogan and Wenatchee National Forests Forest Plan process, approaches for future monitoring of Northwest Forest Plan projects, and the Forest Service Centennial anniversary. All Eastern Washington Cascades and Yakima Province Advisory Committee meetings are open to the public.

**FOR FURTHER INFORMATION CONTACT:** Direct questions regarding this meeting to Paul Hart, Designated Federal Official, USDA, Wenatchee National Forest, 215 Melody Lane, Wenatchee, Washington 98801, 509–664–9200.

Dated: December 23, 2005.

**Paul Hart,**

*Designated Federal Official, Okanogan and Wenatchee National Forests.*

[FR Doc. 05–24591 Filed 12–28–05; 8:45 am]

BILLING CODE 3410–11–M

## DEPARTMENT OF AGRICULTURE

### Forest Service

### Fremont and Winema Resource Advisory Committee

**AGENCY:** Forest Service, USDA.

**ACTION:** Notice of meeting.

**SUMMARY:** The Fremont and Winema Resource Advisory Committee will meet in Klamath Falls, Oregon, for the purpose of conducting business as it relates to the planning of RAC Project Proposal workshops in the winter of 2006. The RAC will also discuss budget and other outstanding business. The RAC is authorized under the provisions of Title II of the Secure Rural Schools and Community Self-Determination Act of 2000.

**DATES:** The meeting will be held on January 5, 2006, beginning at 9 a.m.

**ADDRESSES:** The meeting will be held at the Fremont-Winema Forest Headquarters located at 2819 Dahlia, Klamath Falls, Oregon, 97603. Send written comments to Fremont and Winema Resource Advisory Committee, c/o USDA Forest Service, P.O. Box 67, Paisley, OR 97636, or electronically to *agowan@fs.fed.us.*

**FOR FURTHER INFORMATION CONTACT:** Amy Gowan, Designated Federal Official, c/o Klamath National Forest, 1312 Fairlane Road, Yreka, CA 96097, telephone (530) 841–4421.

**SUPPLEMENTARY INFORMATION:** The agenda will include time for RAC proposal workshop planning, funding review and FY 2002 to 2005 project status report. All Fremont-Winema Resource Advisory Committee Meetings are open to the public. There will be a time for public input and comment. Interested citizens are encouraged to attend.

Dated: December 15, 2005.

**Amy A. Gowan,**

*Designated Federal Official.*

[FR Doc. 05–24575 Filed 12–28–05; 8:45 am]

BILLING CODE 3410–11–M

## DEPARTMENT OF AGRICULTURE

### Natural Resources Conservation Service

### LA–05 Floating Marsh Creation Demonstration Project, Terrebonne Parish, LA

**AGENCY:** Natural Resources Conservation Service, Agriculture.

**ACTION:** Notice of finding of no significant impact.

**SUMMARY:** Pursuant to section 102(2)(C) of the National Environmental Policy Act of 1969; the Council on Environmental Quality Guidelines (40 CFR part 1500); and the Natural Resources Conservation Service Guidelines (7 CFR part 650); the Natural Resources Conservation Service, U.S. Department of Agriculture, gives notice that an environmental impact statement is not being prepared for the Floating Marsh Creation Demonstration Project (LA–05), Terrebonne Parish, Louisiana.

**FOR FURTHER INFORMATION, CONTACT:** Donald W. Gohmert, State Conservationist, Natural Resources Conservation Service, 3737 Government Street, Alexandria, Louisiana 71302; telephone (318) 473–7751.

**SUPPLEMENTARY INFORMATION:** The environmental assessment of the federally assisted action indicates that the demonstration project will not cause significant local, regional, or national impacts on the environment. As a result of these findings, Donald W. Gohmert, State Conservationist, has determined that preparation and review of an environmental impact statement is not needed for this project.

The demonstration project will develop and test unique, previously untested technologies for creating floating marsh in order to restore significantly deteriorated wetland areas that historically supported thick-mat maidencane (*Panicum hemitomon*) floating marsh, and other open freshwater areas. The development of appropriate technology through this plan has potential use throughout fresh and intermediate zones of coastal Louisiana, particularly in Terrebonne Basin where traditional techniques for re-establishing attached marshes are not applicable or feasible.

The recommended project plan consists of two phases: The first phase

is the development and testing, in controlled settings, of a variety of artificial floating marsh system designs along with testing and optimization of plant growth and establishment. The second phase consists of field testing advanced designs of artificial floating marsh systems in selected marsh settings.

The Notice of Finding of No Significant Impact (FONSI) has been forwarded to the Environmental Protection Agency and to various federal, state, and local agencies and interested parties. A limited number of copies of the FONSI are available to fill single copy requests at the above address. Basic data collected during the environmental assessment are on file and may be reviewed by contacting Donald W. Gohmert.

No administrative action on implementation of the proposal will be taken until 30 days after the date of this publication in the **Federal Register**.

**Donald W. Gohmert,**

*State Conservationist.*

[FR Doc. E5–8005 Filed 12–28–05; 8:45 am]

BILLING CODE 3410–16–P

## ANTITRUST MODERNIZATION COMMISSION

### Notice of Public Hearings

**AGENCY:** Antitrust Modernization Commission.

**ACTION:** Notice of public hearings.

**SUMMARY:** The Antitrust Modernization Commission will hold a public hearing on January 19, 2006. The topic of the hearing is an Economists' Roundtable on U.S. Merger Enforcement.

**DATES:** January 19, 2006, 1 p.m. to 4 p.m. Interested members of the public may attend. Registration is not required.

**ADDRESSES:** Federal Trade Commission, Conference Center, 601 New Jersey Avenue, NW., Washington, DC.

**FOR FURTHER INFORMATION CONTACT:** Andrew J. Heimert, Executive Director & General Counsel, Antitrust Modernization Commission: telephone: (202) 233–0701; e-mail: *info@amc.gov*. Mr. Heimert is also the Designated Federal Officer (DFO) for the Antitrust Modernization Commission.

**SUPPLEMENTARY INFORMATION:** The purpose of these hearings is for the Antitrust Modernization Commission to take testimony and receive evidence regarding Merger Enforcement. The hearing will be in the format of a moderated roundtable discussion of economists. Materials relating to the hearing, including a list of witnesses and the prepared statements of the witnesses, will be made available on the Commission's Web site (*www.amc.gov*) in advance of the hearings.

Interested members of the public may submit written testimony on the subject of the hearing in the form of comments, pursuant to the Commission's request for comments. See 70 FR 28902 (May 19, 2005). Members of the public will not be provided with an opportunity to make oral remarks at the hearing.

The AMC is holding this hearing pursuant to its authorizing statute. Antitrust Modernization Commission Act of 2002, Public Law No. 107–273, section 11057(a), 116 Stat. 1758, 1858.

Dated: December 22, 2005.

By direction of the Antitrust Modernization Commission.

**Andrew J. Heimert,**

*Executive Director & General Counsel, Antitrust Modernization Commission.*

[FR Doc. 05–24566 Filed 12–28–05; 8:45 am]

BILLING CODE 6820–YH–P

## DEPARTMENT OF COMMERCE

### International Trade Administration

**(A–570–900)**

### Preliminary Determination of Sales at Less Than Fair Value, Postponement of Final Determination, and Preliminary Partial Determination of Critical Circumstances: Diamond Sawblades and Parts Thereof from the People's Republic of China

**AGENCY:** Import Administration, International Trade Administration, Department of Commerce.

**EFFECTIVE DATE:** December 29, 2005.

**SUMMARY:** We preliminarily determine that diamond sawblades and parts thereof (''diamond sawblades'') from the People's Republic of China (''PRC'') are being, or are likely to be, sold in the United States at less than fair value (''LTFV''), as provided in section 733 of the Tariff Act of 1930, as amended (''the Act''). The estimated margins of sales at LTFV are shown in the ''Preliminary Determination'' section of this notice.

**FOR FURTHER INFORMATION CONTACT:** Catherine Bertrand or Anya Naschak, AD/CVD Operations, Office 9, Import Administration, International Trade Administration, U.S. Department of Commerce, 14th Street and Constitution Avenue, NW, Washington, DC, 20230; telephone: (202)482–3207 or 482–6375, respectively.

**SUPPLEMENTARY INFORMATION:**

**Case History**

On May 3, 2005, the Department of Commerce (''Department'') received a petition on imports of diamond sawblades from the People's Republic of China (''PRC'') and the Republic of Korea (''Korea'') from the Diamond Sawblade Manufacturers' Coalition (''Petitioner'') on behalf of the domestic industry and workers producing diamond sawblades. This investigation was initiated on June 21, 2005. *See Initiation of Antidumping Duty Investigations: Diamond Sawblades and Parts Thereof from the People's Republic of China and the Republic of Korea*, 70 FR 35625 (June 21, 2005) (''*Initiation Notice*''). Additionally, in the *Initiation Notice*, the Department notified parties that it would apply a new process by which exporters and producers may obtain separate–rate status in non–market economy (''NME'') investigations. The new process requires exporters and producers to submit a separate–rate status application. *See Policy Bulletin 05.1: Separate–Rates Practice and Application of Combination Rates in Antidumping Investigations involving Non–Market Economy Countries*, (April 5, 2005), (''*Policy Bulletin 05.1*'') available at http://ia.ita.doc.gov. However, the standard for eligibility for a separate rate (which is whether a firm can demonstrate an absence of both *de jure* and *de facto* governmental control over its export activities) has not changed. Since the initiation of this investigation the following events have occurred.

The Department set aside a period for all interested parties to raise issues regarding product coverage. Between September 16, 2005, and November 23, 2005, Petitioner, Ehwa Diamond Industrial Co., Ltd. (''Ehwa''), and Diamax Industries, Inc., filed comments and rebuttal comments proposing clarifications to the scope of this investigation.

On June 21, 2005, the Department requested quantity and value (''Q&V'') information from a total of twenty–three companies that Petitioner identified as potential producers and/or exporters of diamond sawblades from the PRC. Also on June 21, 2005, the Department sent a letter requesting Q&V information to the China Bureau of Fair Trade for Imports & Exports (''BOFT'') of the Ministry of Commerce (''MOFCOM'') requesting that BOFT transmit the letter to all companies who manufacture and export subject merchandise to the United States, or produce the subject merchandise for the companies who were engaged in exporting the subject merchandise to the United States during

the POI. For a complete list of all parties from which the Department requested Q&V information, *see* Memorandum to James C. Doyle, Director, AD/CVD Operations, Office 9, from Carrie Blozy, Program Manager, AD/CVD Operations, Office 9: Selection of Respondents for the Antidumping Investigation of Diamond Sawblades and Parts Thereof from the People's Republic of China, dated July 19, 2005 (''Respondent Selection Memo''). Between July 5, 2005, and July 15, 2005, the Department received Q&V responses from twenty–five interested parties. For a list of the parties that responded to the Department's Q&V letter, *see* Respondent Selection Memo. The Department did not receive any type of communication from BOFT regarding its request for Q&V information. *See* Respondent Selection Memo.

On July 18, 2005, the United States International Trade Commission (''ITC'') issued its affirmative preliminary determination that there is a reasonable indication that an industry in the United States is materially injured or threatened with material injury by reason of imports from the PRC of diamond sawblades. The ITC's determination was published in the **Federal Register** on July 29, 2005. *See Investigation Nos. 731–TA–1093 (Preliminary), Diamond Sawblades and Parts Thereof from China and Korea*, 70 FR 43903 (July 29, 2005).

On July 19, 2005, the Department selected Bosun Tools Group Co., Ltd. (''Bosun''), Beijing Gang Yan Diamond Product Company (''BGY''), Hebei Jikai Industrial Group Co. Ltd. (''Hebei Jikai''), and Saint–Gobain Abrasives (Shanghai) Co., Ltd. (''Saint Gobain'') as mandatory respondents in this investigation. *See* Respondent Selection Memo.

On July 21, 2005, the Department determined that India, Indonesia, Sri Lanka, the Philippines, and Egypt are countries comparable to the PRC in terms of economic development. *See* Memorandum from Ron Lorentzen, Acting Director, Office of Policy, to Carrie Blozy, Program Manager, China/NME Group, Office 9: Antidumping Investigation of Diamond Sawblades and Parts Thereof from the People's Republic of China (PRC): Request for a List of Surrogate Countries, dated July 21, 2005 (''Office of Policy Surrogate Countries Memorandum'').

On July 14, 2005, the Department requested comments from all interested parties on proposed product characteristics and model match criteria to be used in the designation of control numbers (''CONNUMs'') to be assigned to the subject merchandise. The Department received comments from BGY, Bosun, Hebei Jikai, Petitioner, Shinhan Diamond Industrial Co., Ltd and SH Trading Inc. (collectively ''Shinhan''), and Ehwa Diamond Industrial Co., Ltd. (''Ehwa''). On August 5, 2005, the Department released the product characteristics and model match criteria to be used in the designation of CONNUMs to be assigned the subject merchandise.

On August 8, 2005, the Department informed parties of an error in one of the model match fields, and corrected the mistake.

On July 26, 2005, the Department invited interested parties to comment on the Department's surrogate country selection and/or significant production in the potential surrogate countries and to submit publicly available information to value the factors of production. On August 16, 2005, we received comments regarding the selection of a surrogate country from Petitioner. No other interested parties commented on the selection of a surrogate country. For a detailed discussion of the selection of the surrogate country, *see* ''Surrogate Country'' section below, and the Memorandum to the File through James C. Doyle, Director, AD/CVD Operations, Office 9, from Carrie Blozy, Program Manager, AD/CVD Operations, Office 9: Antidumping Duty Investigation of Diamond Sawblades and Parts Thereof from the People's Republic of China: Selection of a Surrogate Country dated December 20, 2005 (''Surrogate Country Memo'').

On November 15, 2005, Petitioner, BGY, Bosun, and Hebei Jikai submitted comments on surrogate information with which to value the factors of production in this proceeding. Petitioner filed additional comments on December 1, 2005, and December 2, 2005, December 5, 2005, December 14, 2005, and December 16, 2005. Bosun filed additional comments on December 1, 2005, and December 6, 2005. The Department was unable to take into account the comments submitted by Petitioner on December 14, 2005, and December 16, 2005, because they were filed less than one week before the preliminary determination.

On July 21, 2005, we received separate rate applications from sixteen companies, including one mandatory respondent, Hebei Jikai. On August 12, 2005, the Department notified these firms that their applications were incomplete or otherwise deficient. Four additional companies received notification on August 12, 2005, that, as their applications were not filed by the thirty–day deadline set forth in the application, they would not receive a full deficiency letter, though these applicants received general guidelines upon which the Department would review their applications. On August 22, 2005, the Department received re–filings from the twenty applicants to which the Department sent either deficiency or guidelines letters, and an additional four applications. For a complete list of all applications received, *see* Memorandum to James C. Doyle, Director, AD/CVD Operations, Office 9, from Carrie Blozy, Program Manager, AD/CVD Operations, Office 9: Antidumping Investigation of Diamond Sawblades and Parts Thereof from the People's Republic of China: Deficient Separate Rate Applications, dated October 12, 2005 (''Deficient Applications Memo''), at Attachment 1. On September 22, 2005 and September 23, 2005, the Department informed the seventeen applicants whose applications were considered complete by the sixty–day deadline established by the application (''Separate Rate Applicants''), that they would be considered for a separate rate,[1] and requested that they file the addendum required by the application. *See* Letter to All Interested Parties from James C. Doyle, Director, AD/CVD Operations, Office 9, dated September 22, 2005 (''Addendum Letter''); Memorandum to the File from Candice Weck, Case Analyst: Investigation of Diamond Sawblades and Parts Thereof from the People's Republic of China: Separate Rate Applications, dated September 23, 2005. On October 12, 2005, the Department informed six companies that submitted applications of the reasons their applications were considered incomplete for purposes of a separate rates analysis. *See* Deficient Applications Memo.

On July 28, 2005, the Department issued its Sections A, C, D, and E, questionnaire to Bosun, BGY, Hebei Jikai, and Saint Gobain. On September 1, 2005, the Department received a letter from Saint Gobain, informing the Department that Saint Gobain would not be responding to the Department's request for information in this investigation, and accordingly would

[1] Danyang NYCL Tools Manufacturing Co., Ltd., Danyang Youhe Manufacturing Co. Ltd., Fujian Quanzhou Wanlong Stone Co. Ltd., Guilin Tebon Superhard Material Co. Ltd., Huzhou Gu Import & Export Co., Ltd, Jiangsu Fengtai Diamond Tools Manufacturing Co. Ltd., Jiangyin LIKN Industry Co. Ltd., Quanzhou Zhongzhi Diamond Tool Co., Ltd., Rizhao Hein Saw Co. Ltd., Shanghai Deda Industry & Trading Co. Ltd., Sichuan Huili Tools Co., Weihai Xiangguang Mechanical Industrail Co., Ltd., Wuhan Wanbang Laser Diamond Tools Company, Ltd., Xiamen ZL Diamond Tools Co. Ltd., Zhejiang Tea Import & Export Co. Ltd., Zhejiang Wanli Tools Group Co., Ltd. (''Wanli''), and Zhenjiang Inter-China Import & Export Co., Ltd.

not be filing questionnaire responses. The Department issued supplemental questionnaires to Bosun, BGY, and Hebei Jikai between September and December 2005, and received responses between September and December 2005.

On September 2, 2005, and September 8, 2005, Petitioner requested that the Department select additional mandatory respondents in this investigation. The Department informed Petitioner on September 14, 2005, that no additional companies would be selected as mandatory respondents. *See* Letter from Carrie Blozy, Program Manager, AD/CVD Operations, Office 9, to Daniel Pickard of Wiley Rein and Fielding, counsel for Petitioner, dated September 14, 2005.

On September 26, 2005, Petitioner made a timely request pursuant to 19 CFR § 351.205(e) for a fifty–day postponement of the preliminary determination, until December 20, 2005. On October 13, 2005, the Department published a postponement of the preliminary antidumping duty determination on diamond sawblades from the PRC. *See Notice of Postponement of Preliminary Determinations of Antidumping Duty Investigations: Diamond Sawblades and Parts Thereof from the People's Republic of China (A–570–900) and the Republic of Korea (A–580–855)*, 70 FR 59719 (October 13, 2005).

On November 21, 2005, Petitioner alleged that there is a reasonable basis to believe or suspect critical circumstances exist with respect to the antidumping investigation of diamond sawblades from the PRC. On November 22, 2005, the Department issued questionnaires requesting data for monthly exports to the United States from January 2002 through October 2005 from Bosun, BGY, and Hebei Jikai, and received responses on November 30, and December 2, 2005, from Bosun, BGY, and Hebei Jikai. *See* Critical Circumstances section, below.

**Postponement of Final Determination**

Section 735(a) of the Act provides that a final determination may be postponed until no later than 135 days after the date of the publication of the preliminary determination if, in the event of an affirmative preliminary determination, a request for such postponement is made by exporters who account for a significant proportion of exports of the subject merchandise or, in the event of a negative preliminary determination, a request for such postponement is made by the Petitioners. The Department's regulations at 19 CFR 351.210(e)(2) require that requests by respondents for postponement of a final determination be accompanied by a request for an extension of the provisional measures from a four–month period to not more than six months.

On December 19, 2005, Bosun requested that, in the event of an affirmative preliminary determination in this investigation, the Department postpone its final determination by 60 days until 135 days after the publication of the preliminary determination. Additionally, Bosun requested that the Department extend the provisional measures under Section 733(d) of the Act. Accordingly, because we have made an affirmative preliminary determination and the requesting parties account for a significant proportion of the exports of the subject merchandise, pursuant to 735(a)(2) of the Act, we have postponed the final determination until no later than 135 days after the date of publication of the preliminary determination and are extending the provisional measures accordingly.

**Period of Investigation**

The POI is October 1, 2004, through March 31, 2005. This period corresponds to the two most recent fiscal quarters prior to the month of the filing of the petition (May 3, 2005). *See* 19 CFR 351.204(b)(1).

**Scope of Investigation**

The products covered by this investigation are all finished circular sawblades, whether slotted or not, with a working part that is comprised of a diamond segment or segments, and parts thereof, regardless of specification or size, except as specifically excluded below. Within the scope of this investigation are semifinished diamond sawblades, including diamond sawblade cores and diamond sawblade segments. Diamond sawblade cores are circular steel plates, whether or not attached to non–steel plates, with slots. Diamond sawblade cores are manufactured principally, but not exclusively, from alloy steel. A diamond sawblade segment consists of a mixture of diamonds (whether natural or synthetic, and regardless of the quantity of diamonds) and metal powders (including, but not limited to, iron, cobalt, nickel, tungsten carbide) that are formed together into a solid shape (from generally, but not limited to, a heating and pressing process).

Sawblades with diamonds directly attached to the core with a resin or electroplated bond, which thereby do not contain a diamond segment, are not included within the scope of the investigation. Diamond sawblades and/or sawblade cores with a thickness of less than 0.025 inches, or with a thickness greater than 1.1 inches, are excluded from the scope of the investigation. Circular steel plates that have a cutting edge of non–diamond material, such as external teeth that protrude from the outer diameter of the plate, whether or not finished, are excluded from the scope of this investigation. Diamond sawblade cores with a Rockwell C hardness of less than 25 are excluded from the scope of the investigation. Diamond sawblades and/or diamond segment(s) with diamonds that predominantly have a mesh size number greater than 240 (such as 250 or 260) are excluded from the scope of the investigation.

Merchandise subject to this investigation is typically imported under heading 8202.39.00.00 of the Harmonized Tariff Schedule of the United States (''HTSUS''). When packaged together as a set for retail sale with an item that is separately classified under headings 8202 to 8205 of the HTSUS, diamond sawblades or parts thereof may be imported under heading 8206.00.00.00 of the HTSUS. The tariff classifications are provided for convenience and U.S. Customs and Border Protection purposes; however, the written description of the scope of this investigation is dispositive.

**Scope Comments**

As described in the preamble to our regulations (*see Antidumping Duties; Countervailing Duties*, 62 FR 27296, 27323 (May 19, 1997)), we set aside a period of time for parties to raise issues regarding product coverage and encouraged all parties to submit comments within 20 calendar days of publication of the *Initiation Notice*.

The Department received numerous scope comments from a variety of interested parties. As part of this process, the Department has fully summarized and addressed all of the comments received to date in a memorandum to the file. *See* Memorandum to Stephen J. Claeys from Thomas F. Futtner, Acting Office Director: Antidumping Investigation of Certain Diamond Sawblades and Parts Thereof from the Republic of Korea and the People's Republic of China: Consideration of Scope Exclusion and Clarification Requests, dated December 20, 2005 (''Scope Memorandum'').

For this preliminary determination, the Department has determined not to revise the scope of the investigation.

**Selection of Respondents**

Section 777A(c)(1) of the Act directs the Department to calculate individual weighted–average dumping margins for

each known exporter and producer of the subject merchandise. Section 777A(c)(2) of the Act gives the Department discretion, when faced with a large number of exporters/producers, to limit its examination to a reasonable number of such companies if it is not practicable to examine all companies. Where it is not practicable to examine all known producers/exporters of subject merchandise, this provision permits the Department to investigate either (A) a sample of exporters, producers, or types of products that is statistically valid based on the information available to the Department at the time of selection or (B) exporters/producers accounting for the largest volume of the merchandise under investigation that can reasonably be examined. After consideration of the complexities expected to arise in this proceeding and the resources available to it, the Department determined that it was not practicable in this investigation to examine all known producers/exporters of subject merchandise. Instead, we limited our examination to the four exporters accounting for the largest volume of shipments of the subject merchandise to the United States during the POI pursuant to section 777A(c)(2)(B) of the Act. Bosun, BGY, Hebei Jikai, and Saint Gobain, the exporters accounting for the largest volume of exports to the United States, account for a significant percentage of all exports of the subject merchandise from the PRC during the POI and were selected as mandatory respondents. *See* Respondent Selection Memo at 3.

**Critical Circumstances**

On November 21, 2005, Petitioner alleged that there is a reasonable basis to believe or suspect critical circumstances exist with respect to the antidumping investigations of diamond sawblades and parts thereof from the PRC. On November 30, 2005, and December 2, 2005, Bosun, BGY, and Hebei Jikai submitted information on their exports from January 2002 through October 2005 as requested by the Department. In accordance with 19 C.F.R. 351.206(c)(2)(i), because Petitioner submitted critical circumstances allegations more than 20 days before the scheduled date of the preliminary determination, the Department must issue preliminary critical circumstances determinations not later than the date of the preliminary determination.

Section 733(e)(1) of the Act provides that the Department will preliminarily determine that critical circumstances exist if there is a reasonable basis to believe or suspect that: (A)(i) there is a history of dumping and material injury by reason of dumped imports in the United States or elsewhere of the subject merchandise; or (ii) the person by whom, or for whose account, the merchandise was imported knew or should have known that the exporter was selling the subject merchandise at less than its fair value and that there was likely to be material injury by reason of such sales; and (B) there have been massive imports of the subject merchandise over a relatively short period. Section 351.206(h)(1) of the Department's regulations provides that, in determining whether imports of the subject merchandise have been ''massive,'' the Department normally will examine: (i) the volume and value of the imports; (ii) seasonal trends; and (iii) the share of domestic consumption accounted for by the imports. In addition, section 351.206(h)(2) of the Department's regulations provides that an increase in imports of 15 percent during the ''relatively short period'' of time may be considered ''massive.'' Section 351.206(i) of the Department's regulations defines ''relatively short period'' as normally being the period beginning on the date the proceeding begins (*i.e.*, the date the petition is filed) and ending at least three months later. The regulations also provide, however, that if the Department finds that importers, exporters, or producers had reason to believe, at some time prior to the beginning of the proceeding, that a proceeding was likely, the Department may consider a period of not less than three months from that earlier time.

As discussed in detail in the Critical Circumstances Memo, the Department preliminarily finds that there is a reasonable basis to believe or suspect that the importer knew or should have known that there was likely to be material injury by means of sales at LTFV of subject merchandise from the PRC exported by Bosun and the PRC–wide entity. *See* Memorandum to Stephen Claeys, Deputy Assistant Secretary, AD/CVD Operations from James C. Doyle, Director, AD/CVD Operations, Office 9: Antidumping Duty Investigation of Diamond Sawblades and Parts Thereof from the People's Republic of China: Preliminary Affirmative Determination of Critical Circumstances (''Critical Circumstance Memo''). The Department has found preliminary margins of more than 25% for export price sales and more than 15% for constructed export price sales for Bosun and the PRC–wide entity. *See* Critical Circumstances Memo at Attachment at II.

For the reasons set forth in the Critical Circumstances Memo, we also find that there have been massive imports of the subject merchandise over a relatively short period for the respondents, the Separate Rate Applicants, and the PRC–wide entity. *See* Critical Circumstance Memo at Attachment I. We find that importers, exporters, or producers knew or should have known an antidumping case was pending on diamond sawblades imports from the PRC by the date of the filing of the petition in May 2005 and relied on a period of six months as the period for comparison in preliminarily determining whether imports of the subject merchandise have been massive.

Therefore, given the analysis summarized above, and described in more detail in the Critical Circumstances Memo, we preliminarily determine that critical circumstances exist for imports of diamond sawblades from Bosun and the PRC–wide entity. However, we do not find that critical circumstances exist for the Separate Rates Applicants, BGY, or Hebei Jikai.

We will make a final determination concerning critical circumstances for all producers/ exporters of subject merchandise from the PRC when we make our final dumping determinations in this investigation, which will be 135 days after the date of the publication of the preliminary determination.

**Non–Market-Economy Country**

For purposes of initiation, Petitioner submitted LTFV analyses for the PRC as a non–market economy. *See Initiation Notice* 70 FR at 35627. In every case conducted by the Department involving the PRC, the PRC has been treated as an NME country. In accordance with section 771(18)(C)(i) of the Act, any determination that a foreign country is an NME country shall remain in effect until revoked by the administering authority. *See Tapered Roller Bearings and Parts Thereof, Finished and Unfinished, (''TRBs'') From the People's Republic of China: Preliminary Results 2001–2002 Administrative Review and Partial Rescission of Review*, 68 FR 7500 (February 14, 2003), unchanged in *Final Results of 2001–2002 Administrative Review: TRBs from the People's Republic of China*, 68 FR 70488 (December 18, 2003). No party has challenged the designation of the PRC as an NME country in this investigation. Therefore, we have treated the PRC as an NME country for purposes of this preliminary determination.

**Surrogate Country**

When the Department is investigating imports from an NME, section 773(c)(1) of the Act directs it to base normal value, in most circumstances, on the

NME producer's factors of production valued in a surrogate market–economy country or countries considered to be appropriate by the Department. In accordance with section 773(c)(4) of the Act, in valuing the factors of production, the Department shall utilize, to the extent possible, the prices or costs of factors of production in one or more market–economy countries that are at a level of economic development comparable to that of the NME country and are significant producers of comparable merchandise. The sources of the surrogate values we have used in this investigation are discussed under the normal value section below.

On August 16, 2005, the Department received comments from Petitioner on the appropriate surrogate country for valuing the factors of production (''FOP''). Petitioner argued that India is the most appropriate surrogate country in this investigation because India is at a comparable level of economic development with the PRC based on the Department's repeated use of India as a surrogate. Petitioner also provided evidence demonstrating that India is a significant producer of identical and comparable merchandise. Additionally, Petitioner contends that India provides publicly available information on which to base surrogate values. *See* Surrogate Country Memo for a complete description of Petitioner's surrogate country arguments.

As detailed in the Surrogate Country Memo, the Department has preliminarily selected India as the surrogate country on the basis that: (1) it is a significant producer of comparable merchandise; (2) it is at a similar level of economic development pursuant to 733(c)(4) of the Act; and (3) we have reliable data from India that we can use to value the FOP. *See* Surrogate Country Memo. Thus, we have calculated normal value using Indian prices when available and appropriate to value the FOP of the diamond sawblade producers. We have obtained and relied upon publicly available information wherever possible. *See* Memorandum to the File from Catherine Betrand, through Carrie Blozy, Program Manager, AD/CVD Operations, Office 9, and James C. Doyle, Director, AD/CVD Operations, Office 9: Diamond Sawblades and Parts Thereof from the People's Republic of China: Surrogate Values for the Preliminary Determination, dated December 20, 2005 (''Factor Value Memo'').

In accordance with 19 CFR 351.301(c)(3)(i), for the final determination in an antidumping investigation, interested parties may submit publicly available information to value the FOP within 40 days after the date of publication of the preliminary determination.

**Affiliation**

Based on the evidence on the record in this investigation, we preliminarily find that BGY is affiliated with Advanced Technology & Materials Co., Ltd. (''AT&M''), and Yichang HXF Circular Saw Industrial Co., Ltd (''HXF'') (collectively with respondent, the ''AT&M Group'') pursuant to sections 771(33)(E), (F), and (G) of the Act. For a detailed discussion of our analysis, *see* Memorandum to the File from Anya Naschak through Carrie Blozy, Program Manager, AD/CVD Operations, Office 9, to James C. Doyle, Office Director, AD/CVD Operations, Office 9: Affiliation and Treatment as a Single Entity of Beijing Gang Yan Diamond Product Company, Advanced Technology & Materials Co., Ltd., and Yichang HXF Circular Saw Industrial Co., Ltd.; Affiliation of Gang Yan Diamond Products, Inc. and Beijing Gang Yan Diamond Product Company; and Affiliation of Gang Yan Diamond Products, Inc., SANC Materials, Inc., and Cliff (Tianjin) International, Ltd., dated December 20, 2005 (''BGY Affiliation Memo''). In addition, based on the evidence presented in BGY's questionnaire responses, we preliminarily find that the AT&M Group should be treated as a single entity for the purposes of the antidumping duty investigation of diamond sawblades from the PRC. This finding is based on the determination that BGY, HXF, and AT&M are affiliated, that BGY and HXF are both producers of ''identical products,'' and no retooling would be necessary in order to ''restructure manufacturing priorities,'' and there is significant potential for manipulation of price or production between the parties. *See* 19 C.F.R. Sec. 351.401(f)(1); *see also* BGY Affiliation Memo for a discussion of the proprietary aspects of this relationship. With respect to the criterion of significant potential for manipulation of price or production, we note that the Department normally considers three criteria: (i) the level of common ownership; (ii) the extent to which managerial employees or board members of one firm sit on the board of directors of an affiliated firm; and (iii) whether operations are intertwined, such as through the sharing of sales information, involvement in production and pricing decisions, the sharing of facilities or employees, or significant transactions between the affiliated producers. *See* 19 C.F.R. Sec. 351.401(f)(2). Based on the information on the record of this proceeding, we preliminarily find that BGY, HXF, and AT&M meet these criteria. Nothing in this determination conflicts with the language of section 773(c) of the Act. Accordingly, the Department should include all of the AT&M Group's sales to the first U.S. unaffiliated customer and factors of production in its margin calculation analysis. However, the Department does not currently have this information on the record of the proceeding. Therefore, the Department will request this information from the AT&M Group after the issuance of this preliminary determination. Due to the proprietary nature of the information with respect to these affiliations, this information cannot be discussed herein. *See* BGY Affiliation Memo for a further discussion of this issue.

In addition, we preliminarily find that Gang Yan Diamond Products, Inc. (''GYDP''), is affiliated with BGY, pursuant to section 771(33)(E) of the Act. In addition, the Department preliminarily finds that GYDP, SANC Materials, Inc. (''SANC''), and Cliff (Tianjin) International, Ltd. (''Cliff'') are affiliated with each other pursuant to sections 771(33)(B), (E), and (F) of the Act. Due to the proprietary nature of the information with respect to these affiliations, this information cannot be discussed herein. *See* BGY Affiliation Memo for a further discussion of this issue.

**Separate Rates**

In proceedings involving NME countries, the Department has a rebuttable presumption that all companies within the country are subject to government control and thus should be assessed a single antidumping duty rate. It is the Department's policy to assign all exporters of merchandise subject to investigation in an NME country this single rate unless an exporter can demonstrate that it is sufficiently independent so as to be entitled to a separate rate. Bosun, BGY, Hebei Jikai, and the Separate Rate Applicants have provided company–specific information to demonstrate that they operate independently of *de jure* and *de facto* government control, and therefore satisfy the standards for the assignment of a separate rate. One mandatory respondent, Saint Gobain, has not responded to the Department's requests for information nor requested a separate rate in this investigation.

Six companies that filed applications that were incomplete by the sixty–day deadline have not been considered for a separate rate. The separate rate application for this investigation (*see* http://ia.ita.doc.gov/) explains that all applications are due sixty calendar days

after publication of the initiation notice, and the Department will not consider applications that remain incomplete by the deadline, which in this case was August 22, 2005.[2] The Department's separate rates application also states, ''applicants must individually complete and submit this form with all the required supporting documentation by sixty calendar days after the date of publication of the initiation notice of this investigation and applies equally to NME–owned and wholly market–economy owned firms for completing the applicable provisions of the application and for submitting the required supporting documentation {and} the Department will not consider applications that remain incomplete by the deadline.'' *See* Separate Rate Application at 3. The application further instructs, ''the Department only accepts applications that are completed in full and submitted with all the required supporting documentation filed timely and in proper form.''[3] *See* Separate Rate Application at 4. Therefore, the six applications that were not completed in full by the sixty–day deadline have not been considered for a separate rate. *See* Deficient Applications Memo.

We have considered whether each PRC company that submitted a complete application is eligible for a separate rate. The Department's separate–rate test is not concerned, in general, with macroeconomic/border–type controls, *e.g.*, export licenses, quotas, and minimum export prices, particularly if these controls are imposed to prevent dumping. The test focuses, rather, on controls over the investment, pricing, and output decision–making process at the individual firm level. *See Certain Cut–to-Length Carbon Steel Plate from Ukraine: Final Determination of Sales at Less than Fair Value*, 62 FR 61754, 61757 (November 19, 1997), and *Tapered Roller Bearings and Parts Thereof, Finished and Unfinished, from the People's Republic of China: Final Results of Antidumping Duty Administrative Review*, 62 FR 61276, 61279 (November 17, 1997).

To establish whether a firm is sufficiently independent from government control of its export activities to be entitled to a separate rate, the Department analyzes each entity exporting the subject merchandise under a test arising from the *Notice of Final Determination of Sales at Less Than Fair Value: Sparklers from the People's Republic of China*, 56 FR 20588 (May 6, 1991) (''*Sparklers*''), as amplified by Notice of *Final Determination of Sales at Less Than Fair Value: Silicon Carbide from the People's Republic of China*, 59 FR 22585 (May 2, 1994) (''*Silicon Carbide*''). In accordance with the separate–rates criteria, the Department assigns separate rates in NME cases only if respondents can demonstrate the absence of both *de jure* and *de facto* governmental control over export activities.

1. Absence of *De Jure* Control

The Department considers the following *de jure* criteria in determining whether an individual company may be granted a separate rate: (1) an absence of restrictive stipulations associated with an individual exporter's business and export licenses; (2) any legislative enactments decentralizing control of companies; and (3) other formal measures by the government decentralizing control of companies. *See Sparklers*, 56 FR at 20589.

The evidence provided by Bosun, BGY, Hebei Jikai, and the separate rate applicants supports a preliminary finding of *de jure* absence of governmental control based on the following: 1) an absence of restrictive stipulations associated with the individual exporter's business and export licenses; 2) the applicable legislative enactments decentralizing control of the companies; and 3) any other formal measures by the government decentralizing control of companies. *See* Memorandum to James C. Doyle, Director, AD/CVD Operations, Office 9, through Carrie Blozy, Program Manager, AD/CVD Operations, Office 9: Antidumping Duty Investigation of Diamond Sawblades and Parts Thereof from the People's Republic of China: Separate Rates Memorandum, dated December 20, 2005 (''Separate Rates Memo'').

2. Absence of *De Facto* Control

Typically the Department considers four factors in evaluating whether each respondent is subject to *de facto* governmental control of its export functions: (1) whether the export prices are set by or are subject to the approval of a governmental agency; (2) whether the respondent has authority to negotiate and sign contracts and other agreements; (3) whether the respondent has autonomy from the government in making decisions regarding the selection of management; and (4) whether the respondent retains the proceeds of its export sales and makes independent decisions regarding disposition of profits or financing of losses. *See Silicon Carbide*, 59 FR at 22586–87; *see also Notice of Final Determination of Sales at Less Than Fair Value: Furfuryl Alcohol From the People's Republic of China*, 60 FR 22544, 22545 (May 8, 1995). The Department has determined that an analysis of *de facto* control is critical in determining whether respondents are, in fact, subject to a degree of governmental control which would preclude the Department from assigning separate rates.

With respect to BGY, Petitioner argues that BGY should not be granted a separate rate because it is owned and controlled by the PRC government. Specifically, Petitioner argues in its September 2, 2005, submission that BGY is controlled by its parent company, Advanced Technology and Materials Co., Ltd. (''AT&M''), which in turn is owned and controlled by the PRC government. Petitioner argues that AT&M's controlling stockholder, the Central Iron & Steel Research Institute (''CISRI''), is wholly owned and controlled by the State–Owned Assets Supervision and Administration Commission of the State Council (''SASAC''), and that both BGY and AT&M have significant ties to CISRI (including common board and management between AT&M and CISRI), and thus a *de facto* control relationship between SASAC, CISRI, AT&M, and BGY exists. Petitioner has placed on the record AT&M's financial statements, which it argues further supports the conclusion that AT&M is *de facto* controlled by SASAC. *See* Petitioner's September 2, 2005, submission at 6–7 and Exhibit 7. Petitioner further argues that SASAC has authority to appoint and remove top management of companies that it supervises, including CISRI. Citing Coalition for the Preservation of American Brake Drum and Rotor Aftermarket Manufacturers v. United States, 318 F. Supp. 2d 1305, 1312 (CIT 2004), Petitioner argues that BGY's ultimate ownership by the PRC government is sufficient grounds to deny BGY a separate rate. Additionally, Petitioner argues that the PRC government has *de facto* control over BGY. Petitioner notes that BGY's management is appointed by its

[2] This was the first business day after August 20, 2005. *See* section 351.303(b) of the Department's regulations.

[3] We note that the separate rate application requires wholly market-economy owned companies to provide information marked with an asterisk, pertaining to the firm's eligibility for separate rates consideration based on having sold subject merchandise during the POI and support the firm's claim that it is in fact wholly owned by a market-economy entity. Firms claiming to be wholly market-economy owned companies that submit applications without these required elements have also been considered incomplete. See Separate Rates Application at 3.

president of the board, who is also the president of AT&M, and that these appointments were made in effect by AT&M. Further, Petitioner argues that AT&M controls BGY's export activities and income from BGY's export sales. *See* Petitioner's September 2, 2005, letter at 8–9. Petitioner asserts that because AT&M is controlled by the PRC government (which Petitioner argues includes SASAC and CISRI), and because AT&M controls BGY, BGY should be deemed controlled by the PRC government and ineligible for a separate rate by reason of *de facto* control.

BGY argues that if the Department were to find that BGY should not be granted a separate rate it would be a departure from past practice, as AT&M is a publicly–held company, whose majority owner, CISRI, is a corporate entity owned by ''all the people,'' a designation consistently found by the Department to be eligible for a separate rate.

BGY argues in its Supplemental Section A response dated September 20, 2005, submission (''BGY's Supp A'') that in *Silicon Carbide* the Department determined that ownership ''by all the people'' is not sufficient in and of itself to a determination that a company should not receive a separate rate, and that the Department has found companies owned by ''all the people'' were not subject to *de jure* or *de facto* government control in numerous cases. In support, BGY cites *Tapered Roller Bearings and Parts Thereof, Finished and Unfinished, From the People's Republic of China; Final Results of Antidumping Duty Administrative Review and Revocation in Part of Antidumping Duty Order*, 62 FR 6189 (February 11, 1997), *Notice of Preliminary Determination of Sales at Less Than Fair Value: Certain Hot–Rolled Carbon Steel Flat Products From the People's Republic of China*, 66 FR 22183 (May 3, 2001). BGY argues that in *Notice of Preliminary Determination of Sales at Less Than Fair Value: Foundry Coke From the People's Republic of China*, 66 FR 13885 (March 8, 2001), the Department found that the companies at issue should be granted a separate rate, even though the government owned three of the companies. BGY further argues that the Department has found companies subject to export controls to be eligible for a separate rate, and that BGY is not subject to the decision in *Brake Drums and Brake Rotors from the PRC,* 62 FR 9160 (February 28, 2005), as BGY has independent management control and has made a claim of independence from government control. *See* BGY's Supp A submission at 3–5.

In its November 30, 2005, submission, Petitioner reiterates its arguments of September 2, 2005, and argues that BGY has provided incomplete responses to the Department to obscure the control exercised by the PRC government. Petitioner further argues that BGY has not appropriately demonstrated the *de facto* absence of government control, and that ownership by ''all the people'' in and of itself is not sufficient grounds on which to grant BGY a separate rate. Petitioner further argues that the Department's determinations to grant a separate rate to companies owned by ''all the people'' have been predicated upon these companies establishing *de facto* independence (*i.e.*, ability to set their own export prices, negotiate contracts, distribute profit, etc.), which Petitioner argues BGY has failed to do. *See* Petitioner's November 30, 2005, submission at 6–11. Petitioner argues that the record evidence shows that BGY is owned and controlled by SASAC, which has the authority to hire and fire management and order asset sales and acquisitions, and that SASAC is an agency of the PRC central government. Petitioner maintains that SASAC maintains full control over 200 Chinese companies, including CISRI, under the direct supervision of the State Council. Petitioner placed a number of documents on the record, which it argues demonstrates the power of SASAC over the companies under its jurisdiction. Petitioner argues that AT&M is a state–owned company and that BGY conceded that it is ultimately controlled by SASAC through CISRI and AT&M, and therefore BGY should be denied a separate rate based on both a *de jure* and *de facto* control by a state entity, SASAC.

Both BGY and Petitioner submitted additional comments on this issue on December 13, 2005, and December 14, 2005, respectively. However, the Department did not have sufficient time to analyze this information for this preliminary determination. Therefore, the Department will further analyze the additional information for the final determination.

As noted above, the Department considers four factors in evaluating whether each respondent is subject to *de facto* governmental control of its export functions: (1) whether the export prices are set by or are subject to the approval of a governmental agency; (2) whether the respondent has authority to negotiate and sign contracts and other agreements; (3) whether the respondent has autonomy from the government in making decisions regarding the selection of management; and (4) whether the respondent retains the proceeds of its export sales and makes independent decisions regarding disposition of profits or financing of losses. In the instant case, BGY has certified in its response to Section A of the Department's questionnaire, dated August 25, 2005 (''BGY's Section A''), at 9 that its export prices are neither set by nor subject to the approval of a government agency. Further, BGY has placed on the record a number of documents that demonstrate a *de facto* absence of government control, including emails between its general manager and unaffiliated U.S. customers regarding price negotiation on U.S. sales, and documents demonstrating independent negotiation of contracts for purchases of raw materials (*see* BGY's Supp A at Exhibit SA–7). In addition, BGY also placed on the record, in BGY's Section A and BGY's Supp A, documentation that both BGY and AT&M select their own management and boards of directors, demonstrating that BGY and AT&M have autonomy over the selection of management. *See* BGY Section A at Exhibits A–8 and A–9 and BGY Supp A at Exhibit SA–6. BGY has also provided financial statements and board resolution minutes regarding the distribution of profit by both BGY and AT&M. *See* BGY Supp A at Exhibits SA–5 and SA–8. Although Petitioner has stated that SASAC has the authority to hire and fire management and order asset sales and acquisitions at CISRI, it has provided no evidence on the record of this proceeding that SASAC had the ability to exercise such control over AT&M and BGY during the POI. Specifically, we note that the documentation on the record in this review demonstrates that BGY has independence with respect to the setting of export prices and negotiation of contracts. Therefore, the Department preliminarily finds that BGY has both *de jure* and *de facto* control over its export activities. However, the Department will carefully examine the issue of BGY's and AT&M's independence with respect to its export activities at verification. In addition, the Department intends to collect additional information with respect to these issues after the issuance of this preliminary determination.

We determine that, for Bosun, BGY, Hebei Jikai, and the Separate Rate Applicants, the evidence on the record supports a preliminary finding of *de facto* absence of governmental control based on record statements and supporting documentation showing the following: 1) each exporter sets its own export prices independent of the government and without the approval of a government authority; 2) each exporter

retains the proceeds from its sales and makes independent decisions regarding disposition of profits or financing of losses; 3) each exporter has the authority to negotiate and sign contracts and other agreements; and 4) each exporter has autonomy from the government regarding the selection of management.

Therefore, the evidence placed on the record of this investigation by Bosun, BGY, Hebei Jikai, and the Separate Rate Applicants demonstrate an absence of *de jure* and *de facto* government control with respect to each of the exporter's exports of the merchandise under investigation, in accordance with the criteria identified in *Sparklers and Silicon Carbide*. As a result, for the purposes of this preliminary determination, we have granted separate, company–specific rates to Bosun, BGY, and Hebei Jikai, and granted the Separate Rate Applicants a weight–averaged margin. For a full discussion of this issue, *see* Separate Rates Memo.

The Department has, as discussed above in the ''Affiliation'' section, determined that BGY, AT&M, and HXF, shall be treated as a single entity, the AT&M Group. With respect to the AT&M Group, as discussed above, the Department has determined that BGY has demonstrated *de jure* and *de facto* absence of government control with respect to its export activities and will preliminarily be granted a separate rate. HXF submitted a separate rate application, though the Department found HXF's application as submitted, contained substantial deficiencies and did not consider HXF for a separate rate in this investigation. *See* Deficient Applications Memo. As a result, the Department is not able to make a determination with respect to HXF's export activities at this time. However, because the Department has found that HXF should be properly considered part of a single entity with BGY, which has been preliminarily granted a separate rate, and because the Department has knowledge that HXF may have exported or caused to be exported subject merchandise during the POI (*see* HXF's Application), the Department has preliminarily determined to request additional and clarifying information with respect to HXF's *de jure* and *de facto* independence from government control with respect to its export activities, after the issuance of this preliminary determination.

**The PRC–Wide Rate**

The Department has data that indicate there were more exporters of diamond sawblades from the PRC during the POI than those indicated in the response to our request for Q&V information. *See* Respondent Selection Memorandum. We issued our request for Q&V information to twenty–three known Chinese exporters of the subject merchandise and BOFT and MOFCOM,[4] and received twenty–five Q&V responses. We did not receive Q&V responses from thirteen of the companies to which we sent our request for Q&V information (*see* Respondent Selection Memo). We also received seventeen unsolicited Q&V questionnaires.[5] Information on the record of this investigation indicates that there are numerous producers/exporters of diamond sawblades in the PRC. Based upon our knowledge of the volume of imports of subject merchandise from the PRC (*see Initiation Notice*), information on the record indicates that the companies which responded to the Q&V questionnaire, the Separate Rates Applicants, Bosun, BGY, and Hebei Jikai do not account for all imports into the United States from the PRC. Although all exporters, including the mandatory respondent Saint Gobain, were given an opportunity to provide Q&V information, not all exporters provided a response to the Department's Q&V letter or, in the case of Saint Gobain, to the Department's antidumping duty questionnaire. Further, the Government of the PRC did not respond to the Department's questionnaire. Therefore, the Department determines preliminarily that there were PRC exporters of the subject merchandise during the POI from PRC producers/exporters that did not respond to the Department's request for information. We have treated these PRC producers/exporters as part of the PRC–wide entity because they did not qualify for a separate rate.

Section 776(a)(2) of the Act provides that, if an interested party (A) withholds information that has been requested by the Department, (B) fails to provide such information in a timely manner or in the form or manner requested, subject to subsections 782(c)(1) and (e) of the Act, (C) significantly impedes a proceeding under the antidumping statute, or (D) provides such information but the information cannot be verified, the Department shall, subject to subsection 782(d) of the Act, use facts otherwise available in reaching the applicable determination.

Information on the record of this investigation indicates that the PRC–wide entity was non–responsive. Certain companies did not respond to our request for Q&V information and Saint Gobain, one of the largest exporters of the merchandise under investigation,[6] did not respond to the Department's questionnaire. As a result, pursuant to section 776(a)(2)(A) of the Act, we find that the use of facts available is appropriate to determine the PRC–wide rate. *See Preliminary Determination of Sales at Less Than Fair Value, Affirmative Preliminary Determination of Critical Circumstances and Postponement of Final Determination: Certain Frozen Fish Fillets from the Socialist Republic of Vietnam*, 68 FR 4986 (January 31, 2003), unchanged in *Final Determination of Sales at Less Than Fair Value and Affirmative Critical Circumstances: Certain Frozen Fish Fillets from the Socialist Republic of Vietnam*, 68 FR 37116 (June 23, 2003).

Section 776(b) of the Act provides that, in selecting from among the facts otherwise available, the Department may employ an adverse inference if an interested party fails to cooperate by not acting to the best of its ability to comply with requests for information. *See Final Determination of Sales at Less Than Fair Value: Certain Cold–Rolled Flat–Rolled Carbon–Quality Steel Products from the Russian Federation*, 65 FR 5510, 5518 (February 4, 2000). *See also* ''Statement of Administrative Action'' accompanying the URAA, H.R. Rep. No. 103–316, 870 (1994) (''SAA''). We find that, because the PRC–wide entity did not respond to our request for information, it has failed to cooperate to the best of its ability. Therefore, the Department preliminarily finds that, in selecting from among the facts available, an adverse inference is appropriate.

Further, section 776(b) of the Act authorizes the Department to use as adverse facts available (''AFA'') information derived from the petition, the final determination from the LTFV investigation, a previous administrative review, or any other information placed on the record. In selecting a rate for adverse facts available, the Department selects a rate that is sufficiently adverse ''as to effectuate the purpose of the facts available rule to induce respondents to provide the Department with complete and accurate information in a timely manner.'' *See Final Determination of Sales at Less Than Fair Value: Static Random Access Memory Semiconductors from Taiwan*, 63 FR 8909, 8932 (February 23, 1998). It is the

[4] For a list of companies to which the Department sent its request for Q&V information, see Respondent Selection Memo at 1.

[5] For a list of companies from which the Department received Q&V information, *see* Respondent Selection Memo at Attachment 1.

[6] *See* Respondent Selection Memo.

Department's practice to select, as AFA, the higher of the (a) highest margin alleged in the petition, or (b) the highest calculated rate of any respondent in the investigation. See Final Determination of Sales at Less Than Fair Value: Certain Cold–Rolled Carbon Quality Steel Products from the People's Republic of China, 65 FR 34660 (May 21, 2000) and accompanying Issues and Decision Memorandum, at ''Facts Available.'' In the instant investigation, as AFA, we have assigned to the PRC–wide entity a margin based on information in the petition, because the margin derived from the petition is higher than the calculated margins for the selected respondents. In this case, we have applied the petition rate of 164.09 percent.

**Corroboration**

Section 776(c) of the Act requires that, when the Department relies on secondary information rather than on information obtained in the course of an investigation as facts available, it must, to the extent practicable, corroborate that information from independent sources reasonably at its disposal.[7] The *SAA* also states that the independent sources may include published price lists, official import statistics and customs data, and information obtained from interested parties during the particular investigation. *See id*.

The *SAA* also clarifies that ''corroborate'' means that the Department will satisfy itself that the secondary information to be used has probative value. *See SAA* at 870. As noted in *Tapered Roller Bearings and Parts Thereof, Finished and Unfinished, from Japan, and Tapered Roller Bearings, Four Inches or Less in Outside Diameter, and Components Thereof, from Japan; Preliminary Results of Antidumping Duty Administrative Reviews and Partial Termination of Administrative Reviews*, 61 FR 57391, 57392 (November 6, 1996), unchanged in *Final Results of Antidumping Duty Administrative Reviews and Termination in Part: Tapered Roller Bearings and Parts Thereof, Finished and Unfinished, From Japan, and Tapered Roller Bearings, Four Inches or Less in Outside Diameter, and Components Thereof, From Japan*, 62 FR 11825 (March 13, 2005), to corroborate secondary information, the Department will, to the extent practicable, examine the reliability and relevance of the information used.

Petitioner's methodology for calculating the export price and normal value in the petition is discussed in the initiation notice. *See Initiation Notice*, 70 FR at 35627–35628. To corroborate the AFA margin selected, we compared that margin to the margins we found for the respondents.

As discussed in the Memorandum to the File regarding the corroboration of the AFA rate, dated December 20, 2005, we found that the margin of 164.09 percent has probative value. *See* Memorandum to the File through Carrie Blozy, Program Manager, AD/CVD Operations, Office 9: Corroboration of the PRC–Wide Facts Available Rate for the Preliminary Determination in the Antidumping Duty Investigation of Diamond Sawblades and parts thereof from the People's Republic of China, dated December 20, 2005, (''Corroboration Memo''). Accordingly, we find that the rate of 164.09 percent is corroborated within the meaning of section 776(c) of the Act.

Consequently, we are applying 164.09 as the single antidumping rate to the PRC–wide entity, including Saint Gobain and the companies that submitted incomplete separate rate applications. The PRC–wide rate applies to all entries of the merchandise under investigation except for entries from Bosun, BGY, Hebei Jikai, and the Separate Rate Applicants.

The Department will consider all margins on the record at the time of the final determination for the purpose of determining the most appropriate AFA rate for the PRC–wide entity. *See Preliminary Determination of Sales at Less Than Fair Value: Saccharin from the People's Republic of China*, 67 FR 79049, 79054 (December 27, 2002), unchanged in *Final Determination of Sales at Less Than Fair Value: Saccharin From the People's Republic of China*, 68 FR 27530 (May 20, 2003).

**Margin for the Separate Rate Applicants**

The Department received timely and complete separate rates applications from the Separate Rates Applicants, who are all exporters of diamond sawblades from the PRC, which were not selected as mandatory respondents in this investigation. Through the evidence in their applications, these companies have demonstrated their eligibility for a separate rate, as discussed above in the ''Separate Rates'' section and in the Separate Rates Memo. Consistent with the Department's practice, as the separate rate, we have established a weight–averaged margin for the Separate Rates Applicants based on the rates we calculated for Bosun and Hebei Jikai, the companies for which the Department calculated an antidumping duty margin for this preliminary determination, excluding any rates that are zero, *de minimis*, or based entirely on AFA. Companies receiving this rate are identified by name in the ''Suspension of Liquidation'' section of this notice.

**Date of Sale**

Section 351.401(i) of the Department's regulations state that, ''in identifying the date of sale of the subject merchandise or foreign like product, the Secretary normally will use the date of invoice, as recorded in the exporter or producer's records kept in the normal course of business.'' However, the Secretary may use a date other than the date of invoice if the Secretary is satisfied that a different date better reflects the date on which the exporter or producer establishes the material terms of sale. *See* 19 CFR 351.401(i); *See also Allied Tube and Conduit Corp. v. United States*, 132 F. Supp. 2d 1087, 1090–1093 (CIT 2001) (''*Allied Tube*''). The date of sale is generally the date on which the parties agree upon all substantive terms of the sale. This normally includes the price, quantity, delivery terms and payment terms. In order to simplify the determination of date of sale for both the respondent and the Department and in accordance with 19 CFR 351.401(i), the date of sale will normally be the date of the invoice, as recorded in the exporter's or producer's records kept in the ordinary course of business, unless satisfactory evidence is presented that the exporter or producer establishes the material terms of sale on some other date. In other words, the date of the invoice is the presumptive date of sale, although this presumption may be overcome. For instance, in *Final Determination of Sales at Less Than Fair Value: Polyvinyl Alcohol from Taiwan*, 61 FR 14067 (March 29, 1996), the Department used the date of the purchase order as the date of sale because the terms of sale were established at that point.

After examining the questionnaire responses and the sales documentation that Bosun, BGY, and Hebei Jikai placed on the record, we preliminarily determine that invoice date is the most appropriate date of sale for Bosun, BGY, and Hebei Jikai. BGY and Hebei Jikai do not dispute that invoice date is the appropriate date of sale, and the information on the record supports this contention. Bosun, however, claims that the purchase order date is the most appropriate date of sale. Bosun has

[7] Secondary information is described in the SAA as ''information derived from the petition that gave rise to the investigation or review, the final determination concerning subject merchandise, or any previous review under section 751 concerning the subject merchandise.'' *See* SAA at 870.

requested that the Department use the purchase order date, because it argues that the terms of sale do not change after the purchase order is issued. The Department finds that based on the information on the record, Bosun has not rebutted the presumption that invoice date is the appropriate date of sale. *See Preliminary Determination of Sales at Less Than Fair Value: Saccharin From the People's Republic of China*, 67 FR 79054 (December 27, 2005). This conclusion is based on the following four reasons.

First, in its Supplemental Section C Response dated November 1, 2005 (''Bosun Supp C''), Bosun states ''in cases in which any of the sales terms change after the initial date of the purchase order, the date of the purchase order does not change to the date of the change in the sales term.'' *See* Bosun Supp C at 15. The purchase order date therefore does not reflect the date upon which the material terms of sale are ultimately established. Second, Bosun also notes ''during the POI, there were a few instances'' in which the per–unit purchase price changed after the purchase order was issued by the U.S. customer. *Ibid*. at 15–16. Third, Bosun has explained that for some purchases by some customers, an actual purchase order is not actually issued. There is consequently no documentary evidence from the U.S. customer, other than the invoice date, to indicate the date upon which the terms of sale were ultimately established. *See* Bosun Supp C at 10.

Finally, Bosun has also explained, ''the purchase order date is the date that the U.S. customers' purchase {orders were} entered into Bosun's computerized sales order tracking system.'' *See* Bosun's Section C Response dated September 20, 2005 (''Bosun C'') at 1. While Bosun has also explained that the terms of sale are typically entered into its computerized sales order tracking system on the day that the purchase order is received, there is no evidence that the receipt date and the entry date are the same. Moreover, Bosun has also noted that in some instances, the date can differ by at least one business day.

The Department therefore preliminarily finds that there were changes in the essential terms of sale after the issuance of the purchase order. Further, we also find that there were instances where Bosun did not have actual purchase orders for certain customers. *See* Bosun Supplemental Section C Response dated November 1, 2005 at 10.

In *Allied Tube* the Court of International Trade (''CIT'') held that the existence of one sale beyond contractual tolerance levels ''suggested sufficient possibility of changes in material terms of sale so as to render Commerce's date of sale determination supported by substantial evidence.'' *Allied Tube* 132 F. Supp. 2d at 1092. Further, the CIT found that a ''party seeking to establish a date of sale other than invoice date bears the burden of producing sufficient evidence to 'satisfy' the Department that 'a different date better reflects the date on which the exporter or producer establishes the material terms of sale.''' *See id*. Therefore, the Department finds that Bosun has not rebutted the regulatory presumption that the more appropriate date of sale for Bosun is the sales invoice date.

**Fair Value Comparisons**

To determine whether sales of diamond sawblades to the United States by Bosun, BGY, and Hebei Jikai were made at less than fair value, we compared export price (''EP'') or constructed export price (''CEP'') to normal value (''NV''), as described in the ''U.S. Price,'' and ''Normal Value'' sections of this notice. We compared NV to weighted–average EPs and CEPs in accordance with section 777A(d)(1) of the Act.

As noted above, with respect to BGY, the Department has, as discussed above in the ''Affiliation'' section, determined that BGY, AT&M, and HXF shall be treated as a single entity, the AT&M Group. The Department has received and analyzed information from BGY with respect to its U.S. sales and FOPs. The Department has also received and analyzed FOPs for BGY's affiliated core supplier. Based on HXF's Application, the Department has knowledge that HXF may also have acted as the exporter on sales of subject merchandise to the United States. Because HXF is part of the single entity, the AT&M Group, any exports to the United States that HXF may have exported, or caused to be exported, are subject merchandise. Therefore, the Department will request that HXF provide U.S. sales information following the issuance of this preliminary determination.

**U.S. Price**

*Export Price*

For Hebei Jikai, and certain sales by BGY, we based U.S. price on EP in accordance with section 772(a) of the Act, because the first sale to an unaffiliated purchaser was made prior to importation, and CEP was not otherwise warranted by the facts on the record. We calculated EP based on the packed price from the exporter to the first unaffiliated customer in the United States. Where applicable, we deducted foreign movement expenses, foreign brokerage and handling expenses, and international freight expenses from the starting price (gross unit price), in accordance with section 772(c) of the Act. In addition, for certain sales by BGY where BGY demonstrated that its U.S. customer reimbursed it for portions of airfreight expenses, the Department added these revenue amounts to U.S. price. Further, the Department found that BGY incorrectly reported its movement expenses on certain EP sales. For those sales where BGY incorrectly reported in its database movement expenses, the Department adjusted the reported amounts to comport with BGY's narrative explanation.

Where foreign movement, international ocean freight, or international airfreight, was provided by PRC service providers or paid for in Renminbi (''RMB''), we valued these services using surrogate values (see ''Factors of Production'' section below for further discussion).

**Constructed Export Price**

BGY states in BGY's Section A at 13 and in BGY's Supp A at 1 that it does not act as the exporter of record on U.S. sales transactions through its affiliated company, GYDP, and that on these sales Cliff acts as the exporter of record. BGY also states that Cliff has no role in the transaction other than as an export facilitator for GYDP and does not make sales, negotiate terms, or have any commercial role in the sales of subject merchandise. *See* BGY's Supp A at 1.

As an initial matter, the Department is concerned with information placed on the record by BGY in its supplemental questionnaire dated December 5, 2005, which indicates that, contrary to BGY's statements in its prior submissions, GYDP issues purchase orders to Cliff, rather than to BGY, and BGY issues invoices and is paid by Cliff, which in turn issues invoices and receives payment from GYDP. However, because BGY has placed on the record documentation indicating that BGY negotiates the practical terms of sale with GYDP (see BGY's Supp A at Exhibit SA–7), the Department has preliminarily finds that BGY sold merchandise to its affiliated company GYDP, and these sales are classifiable as CEP sales. Therefore, for these sales, we calculated CEP in accordance with section 772(b) of the Act, because we preliminarily find these sales were made on behalf of the PRC–based company by its U.S. affiliate to unaffiliated purchasers. However, the Department will closely examine this

issue at verification to determine if BGY was in fact acting as the seller of merchandise sold by GYDP during the POI, or if in fact these sales should be more properly classified as sales made by Cliff to GYDP.

The Department notes that Cliff has not applied for a separate rate. In the Department's September 6, 2005, Supplemental Section A Questionnaire (''DOC Supp A''), the Department noted that ''the Department has determined that it will assign specific exporter–producer ''combination rates'' to both mandatory respondents and non–investigated NME exporters that meet the Department's criteria for separate rate status in investigations.'' *See* Policy Bulletin 5.1 (http://ia.ita.doc.gov/). The Department's separate rate application specifically states, ''*Each* applicant must submit a separate individual application regardless of any common ownership or affiliation between firms and regardless of foreign ownership.'' *See* Separate Rate Application for Diamond Sawblades and Parts Thereof from the People's Republic of China (http://ia.ita.doc.gov). Cliff has not placed on the record any documentation that would cause the Department to find that it qualifies for a separate rate. Therefore, the Department preliminarily finds that Cliff is appropriately considered part of the PRC–wide entity, and finds that exports of subject merchandise made by Cliff should be considered as made by the PRC–wide entity, and will apply the PRC–wide rate for merchandise exported by Cliff. *See* Separate Rates section above for a discussion of the PRC–wide entity and the PRC–wide rate.

For sales by Bosun, we calculated CEP in accordance with section 772(b) of the Act, because certain sales were made on behalf of the PRC–based company by its U.S. affiliate to unaffiliated purchasers.

For BGY's and Bosun's sales classified as CEP sales, we based CEP on packed, delivered or ex–warehouse prices to the first unaffiliated purchaser in the United States. Where appropriate, we made deductions from the starting price (gross unit price) for foreign movement expenses, international movement expenses, and U.S. movement expenses, in accordance with section 772(c)(2)(A) of the Act.

Bosun reported that it grants early payment, quantity, and other discounts on a case–by-case basis. Accordingly, the Department has subtracted these discounts from the gross unit price, where appropriate.

BGY reported that it is reimbursed on certain terms of sale by its customers for the full amount of inland freight expenses from the warehouse to the customer, and has reported no such freight for these observations due to the burden associated with allocating these expenses. Therefore, for this preliminary determination the Department has not assessed this freight expense for those observations. Further, the Department finds that BGY incorrectly reported its movement expenses on certain CEP sales, based on the reported terms of sale. For those sales where BGY incorrectly reported in its database movement expenses, the Department adjusted the reported amounts to comport with BGY's narrative explanation of the terms of sale. BGY reported that it grants billing adjustments and other discounts on a case–by-case basis. Accordingly, the Department has subtracted these discounts from the gross unit price, where appropriate.

In accordance with section 772(d)(1) of the Act, we also deducted those selling expenses associated with economic activities occurring in the United States. For Bosun, we deducted commissions, inventory carrying costs, credit expenses, warranty expenses, and indirect selling expenses. We also made an adjustment for profit in accordance with section 772(d)(3) of the Act. For BGY we deducted commissions, inventory carrying costs, credit expenses, interest revenue, warranty expenses, and indirect selling expenses, and made an adjustment for profit in accordance with section 772(d)(3) of the Act.

Where foreign movement expenses, international movement expenses, or U.S. movement expenses were provided by PRC service providers or paid for in Renminbi, we valued these services using surrogate values (see ''Factors of Production'' section below for further discussion). For those expenses that were provided by a market–economy provider and paid for in market–economy currency, we used the reported expense.

Due to the proprietary nature of certain adjustments to U.S. price, for a detailed description of all adjustments made to U.S. price for each company, *see* Memorandum to the File from John D. A. LaRose, Case Analyst: Program Analysis for the Final Results of Antidumping Duty Investigation of Diamond Sawblades and Parts Thereof from the People's Republic of China: Bosun Tools Group Co., Ltd. (''Bosun''), dated December 20, 2005 (''Bosun Analysis Memo''); Memorandum to the File from Anya Naschak, Senior Case Analyst: Program Analysis for the Final Results of Antidumping Duty Investigation of Diamond Sawblades and Parts Thereof from the People's Republic of China: Beijing Gang Yan Diamond Product Company (''BGY''), dated December 20, 2005 (''BGY Analysis Memo''); and Memorandum to The File from Candice Kenney Weck, Case Analyst: Program Analysis for the Final Results of Antidumping Duty Investigation of Diamond Sawblades and Parts Thereof from the People's Republic of China: Hebei Jikai Industrial Group Co. Ltd. (''Hebei Jikai''), dated December 20, 2005 (''Hebei Jikai Analysis Memo'').

**Normal Value**

Section 773(c)(1) of the Act provides that the Department shall determine the NV using a factors–of-production methodology if the merchandise is exported from an NME and the information does not permit the calculation of NV using home–market prices, third–country prices, or constructed value under section 773(a) of the Act. The Department bases NV on the FOP because the presence of government controls on various aspects of non–market economies renders price comparisons and the calculation of production costs invalid under the Department's normal methodologies.

*Factor Methodology*

Respondents Bosun and BGY reported that they purchased a small quantity of cores from PRC suppliers that were used in the production of the finished diamond sawblades exported to the United States. In their original questionnaire responses, where the core was purchased, Bosun and BGY reported the usage of the intermediate input. In our supplemental questionnaires, we requested that Bosun and BGY report their suppliers' inputs into producing the purchased cores. Bosun provided this information for certain of its core suppliers and BGY provided the core factors from its single core supplier.[8] Bosun has argued that the Department should rely on the suppliers' cores factors whereas BGY has argued that it is inappropriate for the Department to use such data as a matter of law and practice.

Respondents have reported that the purchased cores are utilized in the production of the finished diamond sawblades (*i.e.*, not sold as is to the United States). Therefore, in this instance we find that the purchased core is properly treated as an input into the finished product rather than as subject merchandise itself. The Department's normal practice is to apply a surrogate

[8] Other of Bosun's core suppliers are affiliated with Bosun through stock ownership of Bosun's owners. For information on BGY's core supplier, see BGY Affiliation Memo.

value to a purchased factor unless it finds that the supplier is the same entity as the respondent. In such a case, the Department will rely on the factors of the supplier.[9]

Bosun has reported it is affiliated with certain of its core suppliers. However, the percentage of cores purchased from the affiliated supplier(s) to total cores consumed by Bosun is insignificant. As recently articulated in an administrative review of *Polyvinyl Alcohol*, one of the Department's exceptions to relying on the reported factors of production for an input is where the percentage of the self–produced input accounts for a small or insignificant share of the total output and the Department recognizes that the increased accuracy in its overall calculations that would result from valuing (separately) each of those factors may be so small so as to not justify the burden of doing so. Accordingly, in such a case the Department will value the intermediate input. *See Polyvinyl Alcohol, 70 FR at 67438 (citing Notice of Final Determination of Sales at Less Than Fair Value: Polyvinyl Alcohol from the People's Republic of China*, 68 FR 47358 (August 11, 2003)). We find that this exception also applies where the level of purchases is small or insignificant, as in this case where the level of purchases from Bosun's affiliated supplier(s) is insignificant when compared to the additional burden on the Department and parties associated with analyzing the factors of production from this supplier, and where limited accuracy is gained. Therefore, we find that it is appropriate to value the purchased core from affiliated supplier(s) as an intermediate input. Accordingly, for purposes of this preliminary determination we are valuing all of Bosun's purchased cores using a surrogate value.

With respect to BGY, the Department is unable to discuss issues related to its core supplier in this notice due to the proprietary nature of this information. Therefore, for a discussion of this issue, see BGY Analysis Memo.

During the POI, Bosun did not have production of all types of merchandise for which it had POI sales. Consequently, the FOP databases filed by Bosun that cover the six–month POI do not contain factors of production for a number of CONNUMs sold by Bosun during the POI. Bosun, therefore, also filed FOP databases covering a fifteen–month period inclusive of the POI. These fifteen–month FOP databases provide factors of production data for the vast majority of the CONNUMs sold by Bosun during the POI. For the valuation of the factors of production, the Department has therefore determined to use the fifteen–month FOP database provided by Bosun. For the CONNUMs for which FOPs are not included in the fifteen–month FOP database, the Department has assigned FOPs for similar subject merchandise that was produced by Bosun in the fifteen–month FOP, as neutral facts available.[10] In assigning FOPs, the Department relied on the first three product characteristics of the CONNUM (physical form of the product as sold, the diameter of the finished sawblade, and the type of attachment used to attach segments to the core) to identify unique product groupings. The Department determined that the first three product groupings were most appropriate because 1) the first characteristics are the most important, and 2) three characteristics are the greatest number of distinct characteristics which would provide FOPs for 100 percent of the CONNUMs which had missing FOPs. The Department then calculated a weighted–average of the FOPs for each product grouping and assigned the product–group weighted–average FOPs to CONNUMs where no FOPs were reported by Bosun. *See* Bosun Analysis Memo.

*Factor Valuations*

In accordance with section 773(c) of the Act, we calculated NV based on FOP data reported by respondents for the POI. To calculate NV, we multiplied the reported per–unit factor–consumption rates by publicly available surrogate values. In selecting the surrogate values, we considered the quality, specificity, and contemporaneity of the data. As appropriate, we adjusted input prices by including freight costs to make them delivered prices. Specifically, we added to Indian import surrogate values a surrogate freight cost using the shorter of the reported distance from the domestic supplier to the factory or the distance from the nearest seaport to the factory where appropriate. This adjustment is in accordance with the Court of Appeals for the Federal Circuit's decision in *Sigma Corp. v. United States*, 117 F. 3d 1401, 1407–1408 (Fed. Cir. 1997).

For this preliminary determination, in accordance with the Department's practice, we used data from the Indian Import Statistics in order to calculate surrogate values for the mandatory respondents' material inputs. In selecting the best available information for valuing FOP in accordance with section 773(c)(1) of the Act, the Department's practice is to select, to the extent practicable, surrogate values which are non–export average values, most contemporaneous with the POI, product–specific, and tax–exclusive. *See e.g., Notice of Preliminary Determination of Sales at Less Than Fair Value, Negative Preliminary Determination of Critical Circumstances and Postponement of Final Determination: Certain Frozen and Canned Warmwater Shrimp From the Socialist Republic of Vietnam*, 69 FR 42672, 42682 (July 16, 2004), unchanged in *Final Determination of Sales at Less Than Fair Value: Certain Frozen and Canned Warmwater Shrimp from the Socialist Republic of Vietnam*, 69 FR 71005 (December 8, 2004). The record shows that data in the Indian Import Statistics represents import data that is contemporaneous with the POI, product–specific, and tax–exclusive. Where we could not obtain publicly available information contemporaneous to the POI with which to value factors, we adjusted the surrogate values using, where appropriate, the Indian Wholesale Price Index (''WPI'') as published in the *International Financial Statistics* of the International Monetary Fund.

Furthermore, with regard to the Indian import–based surrogate values, we have disregarded import prices that we have reason to believe or suspect may be subsidized. We have reason to believe or suspect that prices of inputs from Indonesia, South Korea, and Thailand may have been subsidized. We have found in other proceedings that these countries maintain broadly available, non–industry-specific export subsidies and, therefore, it is reasonable to infer that all exports to all markets from these countries may be subsidized. *See Amended Final Determination of Sales at Less than Fair Value: Automotive Replacement Glass Windshields from the People's Republic of China*, 67 FR 11670 (March 15, 2002); *see also Notice of Final Determination of Sales at Less Than Fair Value and Negative Final Determination of Critical Circumstances: Certain Color Television Receivers From the People's Republic of China*, 69 FR 20594 (April 16, 2004) (''*CTVs from the PRC*''). We are also directed by the legislative history not to conduct a formal investigation to ensure that such prices are not subsidized. *See*

[9] *See e.g., Certain Preserved Mushrooms From the People's Republic of China: Final Results and Final Rescission, in Part, of Antidumping Duty Administrative Review*, 70 FR 54361 (September 14, 2005) and accompanying Issues and Decision Memorandum at Comment 9 (where the Department determined to treat the Jiufa Group as a single entity).

[10] *See* section 776(a)(1) of the Act.

H.R. Rep. 100–576 at 590 (1988). Rather, Congress directed the Department to base its decision on information that is available to it at the time it makes its determination. Therefore, we have not used prices from these countries in calculating the Indian import–based surrogate values.

Certain of BGY's inputs into the production of the merchandise under investigation were purchased from market economy suppliers and paid for in market economy currencies. For two inputs all purchases were made from a market economy supplier and paid in a market economy currency, and the Department has therefore used the weight–averaged POI price experienced by BGY for these inputs. We used the market economy prices experienced by BGY when the inputs were obtained from a market economy, paid for in a market economy currency, and were a significant portion of the total purchases of that input.

The Department used the Indian Import Statistics to value the raw material and packing material inputs that Bosun, BGY, and Hebei Jikai used to produce the subject merchandise during the POI, except where listed below. For a detailed description of all surrogate values used for respondents, see Factor Value Memo.

To value electricity, the Department used rates from *Key World Energy Statistics 2003*, published by the International Energy Agency. Because these data were not contemporaneous to the POI, we adjusted for inflation using WPI. *See* Factor Value Memo.

For direct, indirect, and packing labor, consistent with 19 CFR 351.408(c)(3), we used the PRC regression–based wage rate as reported on Import Administration's home page, Import Library, Expected Wages of Selected NME Countries, revised in November 2005, http://ia.ita.doc.gov/wages/index.html. The source of these wage–rate data on the Import Administration's web site is the Yearbook of Labour Statistics 2002, ILO (Geneva: 2002), Chapter 5B: Wages in Manufacturing. Because this regression–based wage rate does not separate the labor rates into different skill levels or types of labor, we have applied the same wage rate to all skill levels and types of labor reported by the respondent. *See* Factor Value Memo.

The Department valued water using data from the Maharashtra Industrial Development Corporation (www.midcindia.org) since it includes a wide range of industrial water tariffs. This source provides 386 industrial water rates within the Maharashtra province from June 2003: 193 for the ''inside industrial areas'' usage category and 193 for the ''outside industrial areas'' usage category. Because the value was not contemporaneous with the POI, we adjusted the rate for inflation. *See* Factor Value Memo.

We used Indian transport information in order to value the freight–in cost of the raw materials. The Department determined the best available information for valuing truck freight to be from www.infreight.com. This source provides daily rates from six major points of origin to five destinations in India during the POI. The Department obtained a price quote on the first day of each month of the POI from each point of origin to each destination and averaged the data accordingly. *See* Factor Value Memo. To value rail freight, the Department used an average of rail freight prices based on the publicly available freight rates reported by the official website of the Indian Ministry of Railways at www.indianrailways.gov.in/railway/freightrates/freight_charges.htm. The Department used an average of the price–per-kilogram rates for classes 190 and 200 based on the freight distances between cities. As the prices were denoted in quintals, the Department divided the price by 100 to derive a value in Rupees per kilogram. Consistent with the calculation of inland truck freight, the Department used the same freight distances used in the calculation of inland truck freight, as reported by www.infreight.com to derive a value in Rupees per kilogram per kilometer. *See* Factor Value Memo.

The Department used two sources to calculate a surrogate value for domestic brokerage expenses. The Department averaged December 2003–November 2004 data contained in Essar Steel's February 28, 2005, public version response submitted in the AD administrative review of Hot–Rolled Carbon Steel Flat Products from India with October 2002–September 2003 data contained in Pidilite Industries' March 9, 2004, public version response submitted in the AD investigation of Carbazole Violet Pigment 23 from India (*see Notice of Final Determination of Sales at Less Than Fair Value: Carbazole Violet Pigment 23 From India*, 69 FR 67306 (November 17, 2004)). The brokerage expense data reported by Essar Steel and Pidilite Industries in their public versions is ranged data. The Department first derived an average per–unit amount from each source. Then the Department adjusted each average rate for inflation. Finally, the Department averaged the two per–unit amounts to derive an overall average rate for the POI. *See* Factor Value Memo.

To value marine insurance, the Department obtained a price quote from http://www.rjgconsultants.com/insurance.html, a market–economy provider of marine insurance. *See* Factor Value Memo. To value international seafreight, the Department obtained price quotes from http://www.maersksealand.com/HomePage/appmanager/, a market–economy provider of international freight services. *See* Factor Value Memo. To value international airfreight, the Department obtained price quotes from Hong Kong to the United States from DHL. *See* Factor Value Memo. To value factory overhead, selling, general, and administrative expenses, and profit, we used the Reserve Bank of India publication *Reserve Bank of India Bulletin*, August 2005. *See* Factor Value Memo for a full discussion of the calculation of the ratios from these data.

**Currency Conversion**

We made currency conversions into U.S. dollars, in accordance with section 773A(a) of the Act, based on the exchange rates in effect on the dates of the U.S. sales as certified by the Federal Reserve Bank.

**Verification**

As provided in section 782(i)(1) of the Act, we intend to verify the information upon which we will rely in making our final determination.

**Combination Rates**

In the *Initiation Notice*, the Department stated that it would calculate combination rates for certain respondents that are eligible for a separate rate in this investigation. *See Initiation Notice*, 70 FR 35625, 35629. This change in practice is described in *Policy Bulletin 05.1*, available at http://ia.ita.doc.gov/. The *Policy Bulletin 05.1*, states:

> ''[w]hile continuing the practice of assigning separate rates only to exporters, all separate rates that the Department will now assign in its NME investigations will be specific to those producers that supplied the exporter during the period of investigation. Note, however, that one rate is calculated for the exporter and all of the producers which supplied subject merchandise to it during the period of investigation. This practice applies both to mandatory respondents receiving an individually calculated separate rate as well as the pool of non–investigated firms receiving the

weighted–average of the individually calculated rates. This practice is referred to as the application of ''combination rates'' because such rates apply to specific combinations of exporters and one or more producers. The cash–deposit rate assigned to an exporter will apply only to merchandise both exported by the firm in question and produced by a firm that supplied the exporter during the period of investigation.'' *See Policy Bulletin 05.1*, at page 6.

**Preliminary Determination**

The weighted–average dumping margins are as follows:

DIAMOND SAWBLADES FROM THE PRC - WEIGHTED–AVERAGE DUMPING MARGINS

| Exporter | Producer | Weighted–Average Deposit Rate |
|---|---|---|
| Beijing Gang Yan Diamond Products Company | Beijing Gang Yan Diamond Products Company | 0.11 % |
| Bosun Tools Group Co., Ltd. | Bosun Tools Group Co., Ltd. | 16.34% |
| Hebei Jikai Industrial Group Co., Ltd. | Hebei Jikai Industrial Group Co., Ltd. | 10.07% |
| Danyang NYCL Tools Manufacturing Co., Ltd. | Danyang NYCL Tools Manufacturing Co., Ltd. | 14.96% |
| Danyang Youhe Manufacturing Co. Ltd. | Danyang Youhe Manufacturing Co. Ltd. | 14.96% |
| Fujian Quanzhou Wanlong Stone Co., Ltd. | Fujian Quanzhou Wanlong Stone Co., Ltd. | 14.96% |
| Guilin Tebon Superhard Material Co., Ltd. | Guilin Tebon Superhard Material Co., Ltd. | 14.96% |
| Huzhou Gu's Import & Export Co., Ltd. | Danyang Aurui Hardware Products Co., Ltd. | 14.96% |
| Jiangsu Fengtai Diamond Tool Manufacture Co. Ltd. | Jiangsu Fengtai Diamond Tool Manufacture Co. Ltd. | 14.96% |
| Jiangyin LIKN Industry Co., Ltd. | Jiangsu Fengtai Diamond Tool Manufacture Co., Ltd. | 14.96% |
| Jiangyin LIKN Industry Co., Ltd. | Wuhan Wanbang Laser Diamond Tools Co. | 14.96% |
| Quanzhou Zhongzhi Diamond Tool Co., Ltd | Quanzhou Zhongzhi Diamond Tool Co., Ltd. | 14.96% |
| Rizhao Hein Saw Co., Ltd. | Rizhao Hein Saw Co., Ltd. | 14.96% |
| Shanghai Deda Industry & Trading Co. Ltd. | Hua Da Superabrasive Tools Technology Co., Ltd. | 14.96% |
| Sichuan Huili Tools Co. | Chengdu Huifeng Diamond Tools Co., Ltd. | 14.96% |
| Sichuan Huili Tools Co. | Sichuan Huili Tools Co. | 14.96% |
| Weihai Xiangguang Mechanical Industrial Co., Ltd. | Weihai Xiangguang Mechanical Industrial Co., Ltd. | 14.96% |
| Wuhan Wanbang Laser Diamond Tools Company, Ltd. | Wuhan Wanbang Laser Diamond Tools Company, Ltd. | 14.96% |
| Xiamen ZL Diamond Tools Co., Ltd. | Xiamen ZL Diamond Tools Co., Ltd. | 14.96% |
| Zhenjiang Inter– | China Import & Export Co., Ltd.Danyang Weiwang Tools Manufacturing Co., Ltd. | 14.96% |
| Zhejiang Tea Import & Export Co., Ltd. | Danyang Dida Diamond Tools Manufacturing Co., Ltd. | 14.96% |
| Zhejiang Tea Import & Export Co., Ltd. | Danyang Tsunda Diamond Tools Co., Ltd. | 14.96% |
| Zhejiang Tea Import & Export Co., Ltd. | Wuxi Lianhua Superhard Material Tools Co., Ltd. | 14.96% |
| Zhejiang Wanli Tools Group Co., Ltd. | Zhejiang Wanli Super–hard Materials Co., Ltd. | 14.96% |
| PRC–Wide Rate | | 164.09% |

**Disclosure**

We will disclose the calculations performed within five days of the date of publication of this notice to parties in this proceeding in accordance with 19 CFR 351.224(b).

**Suspension of Liquidation**

In accordance with section 733(d) of the Act, we will instruct U.S. Customs and Border Protection (''CBP'') to suspend liquidation of all entries of diamond sawblades from the PRC from Bosun and the PRC–wide entity that are entered, or withdrawn from warehouse, for consumption on or after 90 days prior to the date of publication in the **Federal Register** of our preliminary determination of sales at LTFV. The Department does not require any cash deposit or posting of a bond for this preliminary determination for BGY. Accordingly, we will not direct CBP to suspend liquidation of any entries of diamond sawblades from the PRC that are exported by BGY and entered, or withdrawn from warehouse, for consumption on or after the date of publication of this notice in the **Federal Register**. We will also instruct CBP to suspend liquidation of entries of diamond sawblades that are entered, or withdrawn from warehouse, for consumption that are exported by the Separate Rates Applicants and Hebei Jikai, on or after the date of publication of this preliminary determination in the **Federal Register**. CBP shall require a cash deposit or posting of a bond equal to the estimated preliminary dumping margins, where applicable, as published in the **Federal Register**. This suspension of liquidation will remain in effect until further notice.

**International Trade Commission Notification**

In accordance with section 733(f) of the Act, we have notified the ITC of our preliminary affirmative determination of sales at less than fair value. Section 735(b)(2) of the Act requires the ITC to make its final determination as to whether the domestic industry in the United States is materially injured, or threatened with material injury, by reason of imports of diamond sawblades, or sales (or the likelihood of sales) for importation, of the subject merchandise within 45 days of our final determination.

**Public Comment**

Case briefs or other written comments may be submitted to the Assistant Secretary for Import Administration no later than seven days after the date of the final verification report is issued in this proceeding and rebuttal briefs limited to issues raised in case briefs no later than five days after the deadline date for case briefs. A list of authorities used and an executive summary of issues should accompany any briefs submitted to the Department. This summary should be limited to five pages total, including footnotes.

In accordance with section 774 of the Act, we will hold a public hearing, if requested, to afford interested parties an opportunity to comment on arguments raised in case or rebuttal briefs. If a request for a hearing is made, we intend to hold the hearing three days after the deadline of submission of rebuttal briefs at the U.S. Department of Commerce, 14th Street and Constitution Ave, NW, Washington, DC 20230, at a time and location to be determined. Parties should confirm by telephone the date, time, and location of the hearing two days before the scheduled date.

Interested parties who wish to request a hearing, or to participate if one is requested, must submit a written request to the Assistant Secretary for Import Administration, U.S. Department of Commerce, Room 1870, within 30 days after the date of publication of this notice. See 19 CFR 351.310(c). Requests should contain the party's name, address, and telephone number, the number of participants, and a list of the issues to be discussed. At the hearing, each party may make an affirmative presentation only on issues raised in that party's case brief and may make rebuttal presentations only on arguments included in that party's rebuttal brief.

We will make our final determination no later than 135 days after the date of publication of this preliminary determination, pursuant to section 735(a)(2) of the Act.

This determination is issued and published in accordance with sections 733(f) and 777(i)(1) of the Act.

Dated: December 20, 2005.

**Stephen J. Claeys,**

*Acting Assistant Secretary for Import Administration.*

[FR Doc. 05–24627 Filed 12–28–05; 8:45 am]

**BILLING CODE 3510–DS–S**

---

## DEPARTMENT OF COMMERCE

### International Trade Administration

**[A–580–855]**

### Notice of Preliminary Determination of Sales at Less Than Fair Value, Postponement of Final Determination, and Negative Preliminary Critical Circumstances Determination: Diamond Sawblades and Parts Thereof from the Republic of Korea

**AGENCY:** Import Administration, International Trade Administration, Department of Commerce.

**SUMMARY:** We preliminarily determine that diamond sawblades and parts thereof (DSB) from the Republic of Korea (Korea) are being, or are likely to be, sold in the United States at less than fair value (LTFV), as provided in section 733(b) of the Tariff Act of 1930, as amended (the Act). In addition, we preliminarily determine that there is not a reasonable basis to believe or suspect that critical circumstances exist with respect to the subject merchandise exported from Korea.

Interested parties are invited to comment on this preliminary determination. Because we are postponing the final determination, we will make our final determination not later than 135 days after the date of publication of this preliminary determination in the **Federal Register**.

**EFFECTIVE DATE:** December 29, 2005.

**FOR FURTHER INFORMATION CONTACT:** Mark Manning or Maisha Cryor, AD/CVD Operations, Office 4, Import Administration, International Trade Administration, U.S. Department of Commerce, 14th Street and Constitution Avenue, NW, Washington, DC 20230; telephone: (202) 482–5253 or (202) 482–5831, respectively.

**SUPPLEMENTARY INFORMATION:**

#### Preliminary Determination

We preliminarily determine that DSB from Korea are being, or are likely to be, sold in the United States at LTFV, as provided in section 733 of the Act. The estimated margins of sales at LTFV are shown in the ''Suspension of Liquidation'' section of this notice. In addition, we preliminarily determine that there is not a reasonable basis to believe or suspect that critical circumstances exist with respect to the subject merchandise exported from Korea. The critical circumstances analysis for the preliminary determination is discussed below under the section ''Critical Circumstances.''

#### Background

Since the initiation of this investigation (*see Initiation of Antidumping Duty Investigations: Diamond Sawblades and Parts Thereof from the People's Republic of China and the Republic of Korea*, 70 FR 35625 (June 21, 2005) (*Initiation Notice*)), the following events have occurred.

The Department set aside a period for all interested parties to raise issues regarding product coverage of the scope of the investigation. *See Initiation Notice*, at 70 FR 35626. On September 16, 2005, and October 6, 2005, Ehwa Diamond Industrial Co., Ltd. (Ehwa) submitted comments on product coverage. The petitioner[1] submitted rebuttal comments in September 2005, October 2005, and November 2005. On November 23, 2005, Diamax Industries Inc. (Diamax) also submitted comments on product coverage. *See* ''Scope Comments'' section below.

On June 23, 2005, and June 29, 2005, respectively, the Department requested quantity and value (Q&V) information from a total of thirteen producers of DSB in Korea. The Korean DSB producers from which Q&V information was requested were identified in the Petition, as well as other sources. *See* Memorandum to the File, from Maisha Cryor, Import Compliance Specialist, through Mark Manning, Acting Program Manager, Regarding ''Investigation of Diamond Sawblades and Parts Thereof from the Republic of Korea; Release of Mini-section A Questionnaires,'' dated June 23, 2005. On June 30, 2005, and July 6, 2005, respectively, the Department received timely Q&V responses from seven Korean producers/exporters of DSB. *See* Memorandum to the File, from Maisha Cryor, Import Compliance Specialist, through Mark Manning, Acting Program Manager, Regarding ''Investigation of Diamond Sawblades and Parts Thereof from the Republic of Korea; Mini-section A Questionnaire Response Status,'' dated July 15, 2005.

On July 14, 2005, the International Trade Commission (ITC) preliminarily determined that there is a reasonable indication that an industry in the United States is materially injured by reason of DSB imported from Korea that are alleged to be sold in the United States at LTFV. *See* ITC Investigation No. 731–TA–1093.

On July 14, 2005, the Department issued its proposed draft product characteristics and model match criteria to the seven Korean producers/exporters of DSB who submitted timely Q&V information. *See* ''Letter to All Interested Parties, Regarding Product Characteristics and Model Match Criteria for the Antidumping Investigation of Diamond Sawblades and Parts Thereof from the Republic of Korea,'' dated July 14, 2005. After setting aside a period of time for all interested parties to provide comments on the proposed product characteristics and model match criteria, the Department received comments from Ehwa, Shinhan Diamond Industrial Co., Ltd. (Shinhan) and the petitioner on July 22, 2005. On July 29, 2005, Ehwa, Shinhan and the petitioner submitted rebuttal comments.

On July 20, 2005, the Department selected Ehwa, Shinhan and BK Diamond Products (BK Diamond) (collectively, the respondents), as mandatory respondents in this investigation. *See* Memorandum from Maisha Cryor, Analyst, to Holly A. Kuga, Senior Office Director, ''Selection of Respondents for the Antidumping Duty Investigation of Diamond Sawblades and Parts Thereof from the Republic of Korea,'' dated July 20, 2005 (Respondent Selection Memorandum), on file in the Central Records Unit (CRU), Room B–099 of the main Commerce building.

On July 20, 2005, the Department issued sections A–E of its antidumping

[1] The petitioner in this investigation is the Diamond Sawblade Manufacturers' Coalition.

questionnaire to the mandatory respondents in this investigation.[2]

On July 22, 2005, in response to the Department's selection of BK Diamond as a mandatory respondent, BK Diamond submitted a letter requesting that the Department reconsider its selection, stating that it acted as a trading company and had no involvement in the production of subject merchandise. *See* BK Diamond's July 22, 2005, submission at page 2. On July 27, 2005, and August 4, 2005, respectively, the Department issued supplemental questionnaires to BK Diamond regarding its business activities, and received responses on August 2, 2005, and August 9, 2005, respectively. On August 10, 2005, the petitioner submitted comments in which it advocated retaining BK Diamond's status as a mandatory respondent; BK Diamond submitted rebuttal comments on August 16, 2005. *See* submission from the petitioner, ''Diamond Sawblades and Parts Thereof from South Korea: Selection of Mandatory Respondent – BK Diamond,'' dated August 10, 2005 (petitioner's comments); *see also*, submission from BK Diamond, ''Rebuttal to Petitioner's August 10th Letter Regarding Selection of BK Diamond as Mandatory Respondent: *Diamond Sawblades and Parts Thereof from Korea*,'' dated August 16, 2005 (Rebuttal). After reviewing both BK Diamond and the petitioner's submissions, we determined that BK Diamond is a trading company and should not be a mandatory respondent in this investigation. *See* Memorandum to Holly A. Kuga, Senior Office Director, from Maisha Cryor, Import Compliance Specialist, through Mark Manning, Acting Program Manager, ''Change of Respondents in the Antidumping Investigation of Diamond Sawblades and Parts Thereof (DSB) from the Republic of Korea (Korea),'' dated August 18, 2005. After removing BK Diamond as a mandatory respondent in this investigation, the Department determined that it was appropriate to select an additional respondent. *Id.* Therefore, on August 18, 2005, the Department selected Hyosung Diamond Industrial Co. (Hyosung) as a mandatory respondent. *Id.*

After reviewing interested parties' comments, the Department revised the proposed product characteristics and model match criteria issued in its July 14, 2005, letter, and instructed Ehwa and Shinhan to report their product characteristics accordingly for sections B and C of the Department's questionnaire. *See* ''Letter to All Interested Parties, Regarding Product Characteristics and Model Match Criteria for the Antidumping Investigation of Diamond Sawblades and Parts Thereof from the Republic of Korea,'' dated August 5, 2005.

We issued sections A–E of the antidumping questionnaire to Hyosung on August 18, 2005, complete with the final product characteristics and model match criteria.

On August 19, 2005, Ehwa requested that the Department exclude the following from its reporting requirement: (1) Resales by a downstream affiliated U.S. reseller; (2) home market (HM) and U.S. market sales of cores and segments; and (3) U.S. sales of further processed products. On September 7, 2005, the petitioner submitted rebuttal comments. On September 7, 2005, Shinhan requested that the Department exclude the following from Shinhan's reporting requirement: (1) Export price (EP) sales; (2) sales of merchandise produced by an unaffiliated Chinese producer; (3) U.S. further manufactured sales; and (4) sales of diamond segments. On September 9, 2005, the petitioner submitted rebuttal comments. On October 14, 2005, the Department denied Ehwa's request to exclude HM and U.S. market sales of cores and segments from its reporting requirement. *See* Letter from the Department to J. David Park, Esq. (counsel to Ehwa), ''Exclusion Requests,'' dated October 14, 2005. However, the Department granted Ehwa's request to exclude resales by a downstream affiliated U.S. reseller and U.S. sales of further processed products. *Id.* Similarly, the Department denied Shinhan's request to exclude EP sales and sales of diamond segments from its reporting requirement. *See* Letter from the Department to Raymond Paretzky, Esq. (counsel to Shinhan), ''Exclusion Requests,'' dated October 14, 2005. However, the Department granted Shinhan's request to exclude sales of merchandise produced by an unaffiliated Chinese producer and U.S. further manufactured sales. *Id.* Both Ehwa and Shinhan stated that their total sales of U.S. further manufactured products accounted for less than five percent of their total quantity of U.S. sales. The Department has a demonstrated history of excusing respondents from reporting sales of U.S. further manufactured sales, in an investigation, when the sales account for less than five percent of total U.S. quantity.[3] *See e.g.*, *Notice of Preliminary Determination of Sales at Less Than Fair Value: Certain Cold–Rolled Carbon Steel Flat Products from South Africa*, 67 FR 31243 (May 9, 2002) (no change in the final determination); *Notice of Preliminary Determination of Sales at Less Than Fair Value: Hot–Rolled Flat–Rolled Carbon–Quality Steel Products from Japan*, 64 FR 8291 (February 19, 1999) (no change in the final determination); *Notice of Preliminary Determination of Sales at Less Than Fair Value and Postponement of Final Determination: Static Random Access Memory Semiconductors From the Republic of Korea*, 62 FR 51437 (October 1, 1997) (no change in the final determination). With respect to Hyosung, in its September 29, 2005, section A questionnaire response, Hyosung requested that it be excused from reporting its EP sales. On October 17, 2005, the Department denied this request. *See* the Department's supplemental section A questionnaire, dated October 17, 2005.

We received section A questionnaire responses from Shinhan and Ehwa on August 26, 2005. We received Hyosung's section A response on September 29, 2005.

On September 8, 2005, and November 10, 2005, the Department issued supplemental section A questionnaires to Ehwa and Shinhan and received responses on September 29, 2005, November 10, 2005 and December 5, 2005. We issued a supplemental section A questionnaire to Hyosung on October

[2] Section A of the questionnaire requests general information concerning a company's corporate structure and business practices, the merchandise under investigation, and the manner in which it sells that merchandise in all of its markets. Section B requests a complete listing of all of the company's home market sales of foreign like product or, if the home market is not viable, of sales of the foreign like product in the most appropriate third-country market (this section is not applicable to respondents in non-market economy cases). Section C requests a complete listing of the company's U.S. sales of subject merchandise. Section D requests information on the cost of production of the foreign like product and the constructed value of the merchandise under investigation. Section E requests information on further manufacturing.

[3] While the Department granted requests by Ehwa and Shinhan to exclude certain sales from their reporting requirement, the Department also informed both parties that we reserved the right to request additional information regarding the sales subject to exclusion requests. *See* Letter from the Department to J. David Park, Esq. (counsel to Ehwa), ''Exclusion Requests,'' dated October 14, 2005; *see also*, Letter from the Department to Raymond Paretzky, Esq. (counsel to Shinhan), ''Exclusion Requests,'' dated October 14, 2005. Consequently, the Department issued supplemental questionnaires to Ehwa and Shinhan in September 2005 and October 2005 regarding their exclusion requests and received responses in September 2005 and October 2005. Furthermore, the Department informed Ehwa and Shinhan that, if subsequent to verification, we determined that the data which Ehwa and Shinahn requested not to submit were mis-characterized or should have been used in our analysis, we may rely on facts available, as required by section 776(a)(2)(B) of the Tariff Act of 1930, as amended. *Id.*

17, 2005, and received a response on November 14, 2005.

On September 26, 2005, the petitioner submitted a letter in support of the postponement of the preliminary determination. The petitioner stated that a postponement of the preliminary determination was necessary in order to permit the Department and the petitioner time to fully analyze the information that had been submitted in the investigation. On October 13, 2005, pursuant to section 733(c)(1)(B) of the Act, the Department postponed the preliminary determination of this investigation by 50 days, from October 31, 2005, until December 20, 2005. *See Postponement of Preliminary Determinations of Antidumping Duty Investigations: Diamond Sawblades and Parts Thereof from the People's Republic of China (A–570–900) and the Republic of Korea (A–580–855)*, 70 FR 59719 (October 13, 2005).

We received section B and C questionnaire responses from Ehwa and Shinhan on October 3, 2005. We issued supplemental section B and C questionnaires to Shinhan on October 21, 2005, and received a response on November 21, 2005. We issued supplemental section B and C questionnaires to Ehwa on October 25, 2005, and October 28, 2005, respectively and received responses on December 2, 2005. We received section B and C questionnaire responses from Hyosung on October 28, 2005. We issued supplemental section B and C responses to Hyosung on November 10, 2005, and received responses on December 8, 2005.

On October 7, 2005, in accordance with 19 CFR 351.301(d)(2)(i)(B), the petitioner submitted allegations that HM sales were made at prices below the cost of production (COP) by Ehwa and Shinhan. After reviewing the petitioner's allegations, the Department, in accordance with section 773(b)(2)(A)(i) of the Act, concluded that there was a reasonable basis to suspect that Ehwa and Shinhan were selling DSB in Korea at prices below the COP and initiated cost investigations on October 28, 2005.[4] On October 28, 2005, we requested that Ehwa and Shinhan respond to section D of the Department's questionnaire. *See* Letter from the Department to J. David Park, Esq. (counsel to Ehwa), ''Section D Deadline,'' dated October 28, 2005; *see also*, Letter from the Department to Raymond Paretzky, Esq. (counsel to Shinhan), ''Section D Deadline,'' dated October 28, 2005. On November 4, 2005, in accordance with 19 CFR 351.301(d)(2)(i)(B), the petitioner submitted allegations that HM sales were made at prices below the COP by Hyosung. After reviewing the petitioner's allegations, the Department, in accordance with section 773(b)(2)(A)(i) of the Act, concluded that there was a reasonable basis to suspect that Hyosung was selling DSB in Korea at prices below the COP and initiated a cost investigation on November 10, 2005.[5]

Ehwa and Shinhan submitted their section D responses on November 21, 2005, and November 22, 2005, respectively. Hyosung submitted its section D response on December 5, 2005. We issued supplemental section D responses to Ehwa, Shinhan and Hyosung on December 14, 2005. We note that the Department's supplemental D questionnaires were extensive and covered several fundamental issues, including transactions with affiliated parties, transactions with non–market economy companies, and specialized business contracts. In addition, two of the respondents departed from their normal cost accounting records and adopted another methodology for reporting purposes. The responses to these supplemental questionnaires will be submitted to the Department after this preliminary determination. The Department will analyze these issues, provide the results of our analysis to the respondents and petitioner, and allow the parties to comment on the results of our analysis of these issues prior to the final determination.

On November 21, 2005, the petitioner alleged that critical circumstances exist with respect to imports of DSB from Korea. Accordingly, pursuant to section 732(e) of the Act, on November 29, 2005, we requested information from Ehwa, Shinhan and Hyosung regarding monthly shipments to the United States during the period January 2002 through October 2005.

On December 6, 2005, we received monthly shipment information from Ehwa and Shinhan. Hyosung submitted its monthly shipment information on December 7, 2005. The critical circumstances analysis for the preliminary determination is discussed below in the ''Critical Circumstances'' section of this notice. On December 16, 2005, Ehwa requested that the Department postpone its final determination in the event of an affirmative preliminary determination, in accordance with section 735(a)(2) of the Act.

On December 12, 2005, the petitioner submitted a major input allegation that Ehwa and Shinhan purchased certain major inputs from affiliated entities at prices that were below the affiliated parties' costs of production. Ehwa provided rebuttal comments on December 14, 2005.

On December 12, 2005, the petitioner also submitted a letter in which it raised a question concerning the business relationship between two of the respondents. We received rebuttal comments from the respondents on December 14, 15, and 16, 2005, and additional argument from the petitioner on December 16, 2005. However, as of the date of this preliminary determination, the nature of this topic is designated as business proprietary. Therefore, for further discussion of this matter, please see Memorandum from Thomas F. Futtner, Acting Office Director, to Stephen J. Claeys, Deputy Assistant Secretary for Import Administration, ''Investigation of Diamond Sawblades and Parts Thereof from the Republic of Korea; Petitioner's Allegation Regarding the Business Relationship Between Two Respondents,'' dated December 20, 2005, a public version of which is on file in Department's CRU.

**Postponement of Final Determination**

Section 735(a)(2) of the Act provides that a final determination may be postponed until not later than 135 days after the date of the publication of the preliminary determination if, in the event of an affirmative preliminary determination, a request for such postponement is made by exporters who account for a significant proportion of exports of the subject merchandise, or in the event of a negative preliminary determination, a request for such postponement is made by the petitioner. The Department's regulations, at 351.210(e)(2), require that requests by respondents for postponement of a final determination be accompanied by a

[4] *See* Memorandum to Holly A. Kuga, Senior Office Director, from James Balog, Accountant and Maisha Cryor, Analyst, through Mark Manning, Acting Program Manager, ''Diamond Sawblades and Parts Thereof from Korea, RE: Petitioner's Allegation of Sales Below the Cost of Production for Ehwa (Ehwa Cost Memorandum),'' dated October 28, 2005; *see also* Memorandum to Holly A. Kuga, Senior Office Director, from Nancy Decker, Accountant and Maisha Cryor, Analyst, through Mark Manning, Acting Program Manager, ''Diamond Sawblades and Parts Thereof from Korea, RE: Petitioner's Allegation of Sales Below the Cost of Production for Shinhan (Shinhan Cost Memorandum),'' dated October 28, 2005.

[5] *See* Memorandum to Holly A. Kuga, Senior Office Director, from Nancy Decker, Accountant and Maisha Cryor, Analyst, through Mark Manning, Acting Program Manager, ''Diamond Sawblades and Parts Thereof from Korea, RE: Petitioner's Allegation of Sales Below the Cost of Production for Hyosung (Hyosung Cost Memorandum),'' dated November 10, 2005.

request for extension of provisional measures from a four-month period to not more than six months.

Pursuant to section 735(a)(2) of the Act, on December 16, 2005, Ehwa requested that, in the event of an affirmative preliminary determination in this investigation, the Department postpone its final determination until not later than 135 days after the date of the publication of the preliminary determination in the **Federal Register**, and extend the provisional measures to not more than six months. In accordance with 19 CFR 351.210(b), because (1) our preliminary determination is affirmative, (2) Ehwa accounts for a significant proportion of exports of the subject merchandise, and (3) no compelling reasons for denial exist, we are granting the respondent's request and are postponing the final determination until no later than 135 days after the publication of this notice in the **Federal Register**. Suspension of liquidation will be extended accordingly.

**Period of Investigation**

The period of investigation (POI) is April 1, 2004, through March 31, 2005. This period corresponds to the four most recent fiscal quarters prior to the month of the filing of the petition.

**Scope of Investigation**

The products covered by this investigation are all finished circular sawblades, whether slotted or not, with a working part that is comprised of a diamond segment or segments, and parts thereof, regardless of specification or size, except as specifically excluded below. Within the scope of this investigation are semifinished diamond sawblades, including diamond sawblade cores and diamond sawblade segments. Diamond sawblade cores are circular steel plates, whether or not attached to non–steel plates, with slots. Diamond sawblade cores are manufactured principally, but not exclusively, from alloy steel. A diamond sawblade segment consists of a mixture of diamonds (whether natural or synthetic, and regardless of the quantity of diamonds) and metal powders (including, but not limited to, iron, cobalt, nickel, tungsten carbide) that are formed together into a solid shape (from generally, but not limited to, a heating and pressing process).

Sawblades with diamonds directly attached to the core with a resin or electroplated bond, which thereby do not contain a diamond segment, are not included within the scope of this investigation. Diamond sawblades and/or sawblade cores with a thickness of less than 0.025 inches, or with a thickness greater than 1.1 inches, are excluded from the scope of this investigation. Circular steel plates that have a cutting edge of non–diamond material, such as external teeth that protrude from the outer diameter of the plate, whether or not finished, are excluded from the scope of this investigation. Diamond sawblade cores with a Rockwell C hardness of less than 25 are excluded from the scope of the petition. Diamond sawblades and/or diamond segment(s) with diamonds that predominantly have a mesh size number greater than 240 (such as 250 or 260) are excluded from the scope of this investigation. Merchandise subject to this investigation is typically imported under heading 8202.39.00.00 of the Harmonized Tariff Schedule of the United States (HTSUS). When packaged together as a set for retail sale with an item that is separately classified under headings 8202 to 8205 of the HTSUS, diamond sawblades or parts thereof may be imported under heading 8206.00.00.00 of the HTSUS. The tariff classification is provided for convenience and U.S. Customs and Border Protection purposes; however, the written description of the scope of this investigation is dispositive.

**Scope Comments**

In accordance with the preamble to our regulations, we set aside a period of time for parties to raise issues regarding product coverage and encouraged all parties to submit comments no later than 20 calendar days from the publication of the *Initiation Notice* (*See Antidumping Duties; Countervailing Duties; Final Rule*, 62 FR 27296, 27323 (May 19, 1997) and *Initiation Notice* at 70 FR 35626).

As noted in the ''Background'' section above, on September 16, 2005, and October 6, 2005, Ehwa requested that the Department clarify the scope of the investigation. Specifically, Ehwa requested that the Department expressly state whether the term ''sawblades,'' as it appears in the scope of the investigation, refers only to blades that are used on saws and otherwise meets the physical parameters specified in the scope of the investigation. In addition, Ehwa requested that the Department confirm whether the scope of the investigation covers (1) sawblades with concave or convex cores, and (2) industrial–application, metal–bonded, diamond ''1A1R'' grinding wheels (grinding wheels). Ehwa submitted additional comment on its request concerning ''1A1R'' grinding wheels on December 14, 2005. We received rebuttal comments from the petitioner regarding Ehwa's scope clarification requests on September 23, 2005, October 28, 2005, and November 9, 2005. In addition, on November 23, 2005, Diamax, an importer of diamond sawblades, requested that the Department exclude granite contour diamond sawblades from the scope of the investigation. Specifically, Diamax stated that granite contour diamond sawblades should be excluded from the scope of investigation because: (1) the cores of the sawblades are concave instead of flat, (2) the core hardness of the sawblades falls below the requisite hardness stated in the scope of the investigation, and (3) application of the criteria contained in 19 CFR 351.225(d)(2) indicates that granite contour diamond sawblades should not be covered by the scope of the investigation. We issued Diamax supplemental questions on December 9, 2005. We received Diamax's response on December 15, 2005. The petitioner provided rebuttal comments on December 16, 2005.

Based upon the record evidence, we have neither changed the scope of the investigation, as proposed by Ehwa, nor excluded the products requested by Ehwa or Diamax from the scope of investigation. Specifically, neither Ehwa nor Diamax were able to demonstrate that the products for which they requested exclusion were not covered by the parameters of the scope of the investigation. For further details regarding the Department's decision, *see* Memorandum from Mark Manning, Acting Program Manager, to Thomas F. Futtner, Acting Office Director, Office 4, ''Consideration of Scope Exclusion and Clarification Requests,'' dated December 20, 2005 (Scope Exclusion Memorandum).

**Selection of Respondents**

Section 777A(c)(1) of the Act directs the Department to calculate individual dumping margins for each known exporter and producer of the subject merchandise. Section 777A(c)(2) of the Act gives the Department discretion, when faced with a large number of exporters/producers, however, to limit its examination to a reasonable number of such companies if it is not practicable to examine all companies. Where it is not practicable to examine all known producers/exporters of subject merchandise, this provision permits the Department to investigate either (1) a sample of exporters, producers, or types of products that is statistically valid based on the information available to the Department at the time of selection or (2) exporters/producers accounting for the largest volume of the

merchandise under investigation that can reasonably be examined. After consideration of the complexities expected to arise in this proceeding and the resources available to it, the Department determined that it was not practicable in this investigation to examine all known producers/exporters of subject merchandise. Instead, we limited our examination to the three exporters and producers accounting for the largest volume of the subject merchandise pursuant to section 777A(c)(2)(B) of the Act. The three Korean producers/exporters (Ehwa, Shinhan, and Hyosung) that accounted for a significant percentage of all exports of the subject merchandise from Korea during the POI were selected as mandatory respondents. *See* Respondent Selection Memorandum at 3.

**Country of Origin**

Certain information in this investigation has led the Department to make a preliminary finding regarding the country of origin of subject merchandise sold by the respondents in this investigation. As of the date of this preliminary determination, the nature of this information has been designated as business proprietary. However, based on this information, the Department has determined that the country of origin for completed DSB subject to this investigation is the location where the diamond sawblade is manufactured from a core and segments. For further discussion of this matter, please *see* Memorandum from Thomas F. Futtner, Acting Office Director, to Stephen J. Claeys, ''Investigation of Diamond Sawblades and Parts Thereof from the Republic of Korea; Country of Origin,'' dated December 16, 2005, a public version of which is on file in Department's CRU.

**Fair Value Comparisons**

To determine whether sales of DSB from Korea to the United States were made at LTFV, we compared constructed export price (CEP) and EP to the normal value (NV), as described in the ''Export Price and Constructed Export Price'' and ''Normal Value'' sections of this notice, below. In accordance with section 777A(d)(1)(A)(i) of the Act, we compared POI weighted–average CEPs and EPs to POI weighted–average NVs.

**Product Comparisons**

In accordance with section 771(16) of the Act, we considered all products produced and sold by Ehwa, Shinhan, and Hyosung in the HM during the POI that fit the description in the ''Scope of Investigation'' section of this notice to be foreign like products for purposes of determining appropriate product comparisons to U.S. sales. We compared U.S. sales to sales made in the HM, where appropriate. We have relied upon fourteen criteria to match U.S. sales of subject merchandise to comparison–market sales of the foreign like product. These criteria, in order of importance are: (1) physical form; (2) diameter; (3) type of attachment; (4) cutting edge; (5) diamond mesh size; (6) diamond concentration; (7) diamond grade; (8) segment height; (9) segment thickness; (10) segment length; (11) number of segments; (12) core metal; (13) core type; and (14) core thickness. Where there were no sales of identical merchandise in the HM made in the ordinary course of trade to compare to U.S. sales, we compared U.S. sales to sales of the most similar foreign like product made in the ordinary course of trade. Where there were no sales of identical or similar merchandise made in the ordinary course of trade, we made product comparisons using constructed value (CV).

**Export Price and Constructed Export Price**

For the price to the United States, we used, as appropriate, EP or CEP as defined in sections 772(a) and (b) of the Act, respectively. Section 772(a) of the Act defines EP as the price at which the subject merchandise is first sold (or agreed to be sold) before the date of importation by the exporter or producer outside the United States to an unaffiliated purchaser for exportation to the United States. We based EP on packed and delivered prices to unaffiliated purchasers in the United States. In accordance with section 772(c)(2) of the Act, we reduced the starting price by movement expenses and export taxes and duties, if appropriate. These deductions included, where appropriate, foreign inland freight, foreign brokerage and handling, international freight, marine insurance and U.S. customs duties.

Section 772(b) of the Act defines CEP as the price at which the subject merchandise is first sold in the United States before or after the date of importation, by, or for the account of the producer or exporter of the merchandise, or by a seller affiliated with the producer or exporter, to an unaffiliated purchaser, as adjusted under sections 772(c) and (d) of the Act. We based CEP on packed prices to unaffiliated purchasers in the United States. In accordance with section 772(c)(2) of the Act, we reduced the starting price by movement expenses, which include, where applicable, expenses incurred for foreign inland freight, international freight, marine insurance, foreign and U.S. brokerage and handling, U.S. customs duties (including harbor maintenance fees and merchandise processing fees), U.S. inland insurance, U.S. inland freight, and warehousing. In accordance with section 772(d)(1) of the Act, we made additional adjustments to the starting price in order to calculate CEP, by deducting direct and indirect selling expenses related to commercial activity in the United States. Pursuant to section 772(d)(3) of the Act, where applicable, we made an adjustment to the starting price for CEP profit.

We determined EP and CEP for each company as follows:

*A. Ehwa*

We calculated a CEP for all of Ehwa's U.S. sales because the subject merchandise was sold directly to General Tool, Ehwa's U.S. affiliate, prior to being sold to the first unaffiliated purchaser in the United States. We made deductions from the starting price for movement expenses in accordance with section 772(c)(2)(A) of the Act. These items include expenses incurred for inland freight, domestic brokerage and handling, U.S. brokerage and handling. In addition, we made deductions from the U.S. starting price for discounts and rebates. We also made adjustments to the U.S. starting price for billing adjustments. Pursuant to section 772(d)(3) of the Act, we further reduced the starting price by an amount for profit to arrive at CEP. In accordance with section 772(f) of the Act, we calculated the CEP profit rate using the expenses incurred by Ehwa and its U.S. affiliates on their sales of the subject merchandise in the United States and the profit associated with those sales.

The Department interprets section 772(c)(1)(B) as requiring that any duty drawback be added to CEP if two criteria are met: (1) import duties and rebates are directly linked to, and dependent upon, one another, and; (2) raw materials were imported in sufficient quantities to account for the duty drawback received on exports of the manufactured product. The first prong of the test requires the Department ''to analyze whether the foreign country in question makes entitlement to duty drawback dependent upon the payment of import duties.'' *See* Far East Machinery, 699 F. Supp. at 311. This ensures that a duty drawback adjustment will be made only where the drawback received by the manufacturer is contingent on import duties paid or accrued. The second

prong requires the foreign producer to show that it imported a sufficient amount of raw material (upon which it paid import duties) to account for the exports upon which it claimed its rebates. *Id.* Ehwa reported that it received certain ''drawback'' amounts associated with duties paid on imported inputs pursuant to the Korean Government's individual application system, where the duty is rebated based upon each applicant's use of the imported input. Since the applicable criteria appear to have been met in this case, we made additions to the starting price for duty drawback in accordance with section 772(c)(1)(B) of the Act.

*B. Shinhan*

We calculated a CEP for a portion of Shinhan's U.S. sales because the subject merchandise was sold directly to SH Trading, Shinhan's U.S. affiliate, prior to being sold to the first unaffiliated purchaser in the United States. We made deductions from the starting price for movement expenses in accordance with section 772(c)(2)(A) of the Act. These items include expenses incurred for inland freight, domestic brokerage and handling, U.S. brokerage and handling. In addition, we made deductions from the U.S. starting price for discounts and rebates. We also made adjustments to the U.S. starting price for billing adjustments. In accordance with section 772(f) of the Act, we calculated the CEP profit rate using the expenses incurred by Shinhan and its U.S. affiliates on their sales of the subject merchandise in the United States and the profit associated with those sales.

We calculated EP for a portion of Shinhan's U.S. sales because the merchandise was sold directly by Shinhan to the first unaffiliated purchaser in the United States prior to importation. We made deductions from the starting price for movement expenses in accordance with section 772(c)(2)(A) of the Act. These items include expenses incurred for foreign inland freight, foreign brokerage and handling, and U.S. customs duties, when applicable. In addition, we made deductions from the starting price for discounts, where appropriate.

As mentioned above, the Department will add duty drawback to U.S. price only if the respondent demonstrates that it has satisfied the Department's two–prong test. Shinhan reported that it received certain ''drawback'' amounts associated with duties paid on imported inputs pursuant to the Korean Government's individual application system, where the duty is rebated based upon each applicant's use of the imported input. Since the applicable criteria appear to have been met in this case, we made additions to the starting price for duty drawback in accordance with section 772(c)(1)(B) of the Act.

*C. Hyosung*

We calculated a CEP for a portion of Hyosung's U.S. sales because the subject merchandise was sold directly to Western Diamond Tools Inc., Hyosung's U.S. affiliate, prior to being sold to the first unaffiliated purchaser in the United States. We made deductions from the starting price for movement expenses in accordance with section 772(c)(2)(A) of the Act. These items include expenses incurred for inland freight, domestic brokerage and handling, international freight, U.S. brokerage and handling, and U.S. customs duties. Where applicable, we adjusted movement expenses to account for freight revenue. In addition, we made deductions from the U.S. starting price for discounts and rebates, such as early payment discounts, quantity discounts, and other discounts. Additionally, we made adjustments to the U.S. starting price for billing adjustments and the value of returned merchandise. In accordance with section 772(f) of the Act, we calculated the CEP profit rate using the expenses incurred by Hyosung and its U.S. affiliates on their sales of the subject merchandise in the United States and the profit associated with those sales.

We calculated EP for a portion of Hyosung's U.S. sales because the merchandise was sold directly by Hyosung to the first unaffiliated purchaser in the United States prior to importation. We made deductions from the starting price for movement expenses in accordance with section 772(c)(2)(A) of the Act. These items include expenses incurred for inland freight, domestic brokerage, international freight, and U.S. customs duties, where applicable. In addition, we made deductions from the starting price for discounts, where appropriate.

As mentioned above, the Department will add duty drawback to U.S. price only if the respondent demonstrates that it has satisfied the Department's two–prong test. Hyosung received drawback for certain duties it paid on inputs used to produce subject merchandise that was exported to the United States pursuant to the Korean government's fixed–rate system, rather than the individual application system used by Ehwa and Shinhan. While there have been cases where specific respondents have been able, on their own, to demonstrate an entitlement to an upward adjustment to U.S. price for duty drawback under the fixed–rate scheme, the Department has repeatedly found that the fixed–rate system, by itself, does not meet the Department's two–prong test. *See Polyester Staple Fiber from Korea: Final Results of Antidumping Duty Administrative Review*, 67 FR 63616 (October 15, 2002) and Issues and Decision Memorandum at Comment 5. In this investigation, Hyosung reported that its own yield rates are not used in calculating the amount of duty drawback received from the Korean Government. Instead, the amount of drawback it receives derives from the fixed–rate of drawback published by the Commissioner of the Korean Customs Service. *See* Hyosung's December 8, 2005, submission at 17. According to Hyosung, the amount of drawback it receives is simply the fixed–rate of drawback established by the Korean Customs Service multiplied by the commercial invoice value from its export sales.

Based on evidence on the record of the instant case, we find that Hyosung has not provided sufficient documentation to satisfy the first prong of the Department's duty drawback test. With regard to prong one, an analysis of the information on the record does not demonstrate that the import duties paid and the amount of duty rebated are directly linked. Record evidence indicates that in order to qualify for drawback under the fixed–rate duty drawback system, Hyosung has only to provide Korean Customs with a export permit and commercial invoice. *See* Hyosung's October 28, 2005, at page 31, and Attachment C–10. According to Hyosung, the duty refunded is a fixed percentage of the export invoice value, where the percent is determined by the Korean Customs Service. In other words, Hyosung's rebate is not based on the actual amount of duties paid on raw materials imported by Hyosung. Thus, the information submitted by Hyosung demonstrates only that the amount of duty rebated is tied to the FOB price of the exported merchandise. There is no evidence on the record that the amount of duty rebated and received by Hyosung is directly linked to or dependent upon import duties paid by Hyosung. Accordingly, for purposes of this preliminary determination, we are not granting Hyosung a duty drawback adjustment.

**Normal Value**

*A. Home Market Viability*

In order to determine whether there is a sufficient volume of sales in the HM to serve as a viable basis for calculating NV (*i.e.*, the aggregate volume of HM sales of the foreign like product is equal

to or greater than five percent of the aggregate volume of U.S. sales), we compared each respondent's volume of HM sales of the foreign like product to the volume of its U.S. sales of the subject merchandise, in accordance with section 773(a)(1)(C) of the Act.

In this investigation, we determined that the aggregate volume of HM sales of the foreign like product for each respondent was sufficient to permit a proper comparison with its U.S. sales of the subject merchandise.

*B. Affiliated Party Transactions and Arm's–Length Test*

Ehwa, Shinhan and Hyosung reported that they sold DSB in the comparison market only to unaffiliated customers. Therefore, application of the arm's–length test is unnecessary.

*C. Level of Trade/Constructed Export Price Offset*

In accordance with section 773(a)(1)(B) of the Act, to the extent practicable, we determine NV based on sales in the comparison market at the same LOT as the CEP. Pursuant to 19 CFR 351.412(c)(1), the NV LOT is that of the starting–price sales in the comparison market or, when NV is based on CV, that of the sales from which we derive selling, general and administrative expenses (SG&A) and profit. For CEP, it is the level of the constructed sale from the exporter to the importer.

To determine whether NV sales are at a different LOT than U.S. sales, we examine stages in the marketing process and selling functions along the chain of distribution between the producer and the unaffiliated customer. *See* 19 CFR 351.412(c)(2). If the comparison–market sales are at a different LOT, and the difference affects price comparability, as manifested in a pattern of consistent price differences between the sales on which NV is based and comparison market sales at the LOT of the export transaction, we make an LOT adjustment under section 773(a)(7)(A) of the Act. Finally, for CEP sales, if the NV level is more remote from the factory than the CEP level and there is no basis for determining whether the difference in levels between NV and CEP affects price comparability, we adjust NV under section 773(a)(7)(B) of the Act (the CEP–offset provision). *See Notice of Final Determination of Sales at Less Than Fair Value: Certain Cut–to-Length Carbon Steel Plate from South Africa*, 62 FR 61731 (November 19, 1997). For CEP sales, if the LOT of the home market sale is more remote from the factory than the CEP level and there is no basis for determining whether the difference between the LOT of the home market sale and the CEP transaction affects price comparability, we adjust NV pursuant to section 773(a)(7)(B) of the Act (the CEP–offset provision). *See Final Determination of Sales at Less Than Fair Value: Greenhouse Tomatoes From Canada*, 67 FR 8781 (February 26, 2002).

In this investigation, we obtained information from each respondent regarding the marketing stages involved in making the reported HM and U.S. sales, including a description of the selling activities performed by each respondent for each channel of distribution. Company–specific LOT findings are summarized below.

*Ehwa*

The Department analyzed Ehwa's sales data to make a company–specific LOT finding. Based upon this analysis, the Department denied Ehwa a LOT adjustment, but did grant Ehwa a CEP–offset. As of the date of this preliminary determination, the nature of Ehwa's LOT data is designated as business proprietary. Therefore, for further discussion of this matter, please *see* Memorandum from Maisha Cryor, Senior International Trade Compliance Analyst, to Thomas F. Futtner, Acting Office Director, ''Level of Trade Analysis,'' dated December 20, 2005, a public version of which is on file in Department's CRU.

*Shinhan*

The Department analyzed Shinhan's sales data to make a company–specific LOT finding. Based upon this analysis, the Department denied Shinhan a LOT adjustment, but did grant Shinhan a CEP–offset. As of the date of this preliminary determination, the nature of Shinhan's LOT data is designated as business proprietary. Therefore, for further discussion of this matter, please *see* Memorandum from Maisha Cryor, Senior International Trade Compliance Analyst, to Thomas F. Futtner, Acting Office Director, ''Level of Trade Analysis,'' dated December 20, 2005, a public version of which is on file in Department's CRU.

*Hyosung*

The Department analyzed Hyosung's sales data to make a company–specific LOT finding. Based upon this analysis, the Department found that because there is only one LOT in the HM, it is not possible to compare price differences between sales at different levels of trade. Therefore, pursuant to section 773(7)(A) of the Act, the Department determined that Hyosung does not qualify for a LOT adjustment. However, the Department did determine that Hyosung's LOT is at a more advanced stage of distribution than the LOT for CEP sales and granted Hyosung a CEP offset to NV. For a further discussion of our LOT analysis for Hyosung, please *see* Memorandum from Thomas Martin, International Trade Compliance Analyst, to Thomas F. Futtner, Acting Office Director, ''Level of Trade Analysis: Hyosung D & P Co., Ltd. and Western Diamond Tools Inc.,'' dated December 20, 2005.

*D. Cost of Production Analysis*

Based on our analysis of the petitioner's allegations, we found that there were reasonable grounds to believe or suspect that Ehwa, Shinhan, and Hyosung's sales of DSB in the HM were made at prices below their respective COP. Accordingly, pursuant to section 773(b) of the Act, we initiated sales–below-cost investigations to determine whether Shinhan, Ehwa and Hyosung's sales were made at prices below their respective COPs. *See* the Ehwa Cost Memorandum, the Shinhan Cost Memorandum, and the Hyosung Cost Memorandum.

*1. Calculation of COP*

In accordance with section 773(b)(3) of the Act, we calculated COP based on the sum of the cost of materials and fabrication for the foreign like product, plus an amount for SG&A, and interest expenses. *See* ''Test of Home Market Sales Prices'' section below for treatment of HM selling expenses. We relied on the COP data submitted by Ehwa, Shinhan, and Hyosung except for an adjustment made to Shinhan's reported general and administrative (G&A) expenses and interest expenses. Specifically, we deducted ''Loss on Disposal of Accounts Receivable,'' which is reported as a non–operating expense on Shinhan's financial statement from Shinhan's G&A calculation. For further details regarding these adjustments, please *see* the Memorandum from Nancy Decker, Case Accountant, to Neal M. Halper, Director of Accounting, ''Cost of Production and Constructed Value Calculation Adjustments for the Preliminary Determination - Shinhan'' dated December 20, 2005.

*2. Test of Home Market Sales Prices*

On a product–specific basis, we compared the adjusted weighted–average COP to the HM sales of the foreign like product, as required under section 773(b) of the Act, in order to determine whether the sale prices were below the COP. The prices were exclusive of any applicable billing adjustments, movement charges, and

direct and indirect selling expenses. In determining whether to disregard HM sales made at prices less than its COP, we examined, in accordance with sections 773(b)(1)(A) and (B) of the Act, whether such sales were made (1) within an extended period of time in substantial quantities, and (2) at prices which permitted the recovery of all costs within a reasonable period of time.

*3. Results of the COP Test*

Pursuant to section 773(b)(2)(C) of the Act, where less than 20 percent of the respondent's sales of a given product during the POI are at prices less than the COP, we do not disregard any below–cost sales of that product, because we determine that in such instances the below–cost sales were not made in substantial quantities. Where 20 percent or more of the respondent's sales of a given product during the POI are at prices less than the COP, we determine that the below–cost sales represent substantial quantities within an extended period of time, in accordance with section 773(b)(1)(A) of the Act. In such cases, we also determine whether such sales were made at prices which would not permit recovery of all costs within a reasonable period of time, in accordance with section 773(b)(1)(B) of the Act.

Our cost test revealed that more than twenty percent of Ehwa, Shinhan, and Hyosung's HM sales of certain products were made at below–cost prices during the reporting period. Therefore, we disregarded those below–cost sales while retaining the above–cost sales for our analysis. Where there were no sales of any comparable product at prices above the COP, we used CV as the basis for determining NV.

*E. Calculation of Normal Value Based on Comparison Market Prices*

Ehwa

For Ehwa, we calculated NV based on ex–factory prices to unaffiliated customers. We reduced the HM starting price for rebates in accordance with 19 CFR 351.401(c). In addition, we reduced the starting price for inland freight pursuant to section 773(a)(6)(B) of the Act. In accordance with 19 CFR 351.401(c), we increased the starting price for interest revenue and adjusted for billing adjustments and discounts. We also made circumstances of sale (COS) adjustments to the starting price for imputed credit expenses in accordance with section 773(a)(6)(C)(iii) of the Act and 19 CFR 351.410. Finally, we deducted HM packing costs from, and added U.S. packing costs to, the starting price in accordance with sections 773(a)(6)(A) and (B) of the Act.

Shinhan

We based NV for Shinhan on prices to unaffiliated customers. We reduced the HM starting price for rebates in accordance with 19 CFR 351.401(c). In addition, we reduced the starting price for inland freight pursuant to section 773(a)(6)(B) of the Act. In accordance with 19 CFR 351.401(c), we increased the starting price for interest revenue and adjusted for billing adjustments and discounts. We also made COS adjustments to the starting price for imputed credit expenses in accordance with section 773(a)(6)(C)(iii) of the Act and 19 CFR 351.410. Finally, we deducted HM packing costs from, and added U.S. packing costs to, the starting price in accordance with sections 773(a)(6)(A) and (B) of the Act.

Hyosung

We based NV for Hyosung on prices to unaffiliated customers. We reduced the HM starting price for rebates in accordance with 19 CFR 351.401(c). In addition, we reduced the starting price for inland freight pursuant to section 773(a)(6)(B) of the Act. We also made COS adjustments to the starting price for imputed credit expenses in accordance with section 773(a)(6)(C)(iii) of the Act and 19 CFR 351.410. Finally, we deducted HM packing costs from, and added U.S. packing costs to, the starting price in accordance with sections 773(a)(6)(A) and (B) of the Act.

**Currency Conversion**

We made currency conversions into U.S. dollars in accordance with section 773A(a) of the Act based on the exchange rates in effect on the dates of the U.S. sales as certified by the Federal Reserve Bank.

**Critical Circumstances**

On November 21, 2005, the petitioner alleged that there is a reasonable basis to believe or suspect critical circumstances exist with respect to the antidumping investigation of diamond sawblades and parts thereof from Korea. In accordance with 19 CFR 351.206(c)(2)(i), because the petitioner submitted its critical circumstances allegation more than 20 days before the scheduled date of the preliminary determination, the Department must issue a preliminary critical circumstances determination not later than the date of the preliminary determination.

Section 733(e)(1) of the Act provides that the Department will preliminarily determine that critical circumstances exist if there is a reasonable basis to believe or suspect that: (A)(i) there is a history of dumping and material injury by reason of dumped imports in the United States or elsewhere of the subject merchandise; or (ii) the person by whom, or for whose account, the merchandise was imported knew or should have known that the exporter was selling the subject merchandise at less than its fair value and that there was likely to be material injury by reason of such sales; and (B) there have been massive imports of the subject merchandise over a relatively short period. Section 351.206(h)(1) of the Department's regulations provides that, in determining whether imports of the subject merchandise have been ''massive,'' the Department normally will examine: (i) the volume and value of the imports; (ii) seasonal trends; and (iii) the share of domestic consumption accounted for by the imports. In addition, 19 CFR 351.206(h)(2) provides that an increase in imports of 15 percent during a ''relatively short period'' of time may be considered ''massive.'' Section 351.206(i) of the Department's regulations defines ''relatively short period'' as normally being the period beginning on the date the proceeding begins (*i.e.*, the date the petition is filed) and ending at least three months later. The regulations also provide, however, that if the Department finds that importers, exporters, or producers had reason to believe, at some time prior to the beginning of the proceeding, that a proceeding was likely, the Department may consider a period of not less than three months from that earlier time.

In determining whether the above statutory criteria have been satisfied, we examined: (1) the evidence presented in the petitioner's submission of November 21, 2005, and (2) additional information obtained from Ehwa, Shinhan, and Hyosung.

To determine whether there is a history of injurious dumping of the merchandise under investigation, in accordance with section 733(e)(1)(A)(i) of the Act, the Department normally considers evidence of an existing antidumping duty order on the subject merchandise in the United States or elsewhere to be sufficient. *See Preliminary Determination of Critical Circumstances: Steel Concrete Reinforcing Bars From Ukraine and Moldova*, 65 FR 70696 (Nov. 27, 2000). With regard to imports of DSB from Korea, the petitioner makes no specific mention of a history of dumping for Korea. As we are not aware of any antidumping order in any country on diamond sawblades and parts thereof from Korea, the Department does not

find a history of injurious dumping of the subject merchandise from Korea pursuant to section 733(e)(1)(A)(i) of the Act.

To determine whether the person by whom, or for whose account, the merchandise was imported knew or should have known that the exporter was selling the subject merchandise at less than its fair value and that there was likely to be material injury by reason of such sales in accordance with section 733(e)(1)(A)(ii) of the Act, the Department normally considers margins of 25 percent or more for EP sales, or 15 percent or more for CEP transactions, sufficient to impute knowledge of dumping. *See, e.g., Preliminary Determination of Sales at Less Than Fair Value: Certain Cut–to-Length Carbon Steel Plate from the People's Republic of China*, 62 FR 31972, 31978 (October 19, 2001). In determining whether an importer knew or should have known that there was likely to be material injury caused by reason of such imports, the Department normally will look to the preliminary injury determination of the ITC. If the ITC finds a reasonable indication of present material injury to the relevant U.S. industry, the Department will determine that a reasonable basis exists to impute importer knowledge that material injury is likely by reason of such imports. *See Final Determination of Sales at Less Than Fair Value: Certain Cut–To-Length Carbon Steel Plate from the People's Republic of China*, 62 FR 61964 (November 20, 1997).

In the instant case, the respondents reported both EP and CEP sales. The preliminary dumping margins calculated for Ehwa, Shinhan, and Hyosung's EP sales are below 25 percent, while the preliminary dumping margins for Ehwa, Shinhan, and Hyosung's CEP sales are below 15 percent. *See* Memorandum from Mark J. Manning, Acting Program Manager, to Thomas F. Futtner, Acting Office Director, ''Preliminary Negative Determination of Critical Circumstances,'' dated December 20, 2005 (Critical Circumstances Memorandum). As the preliminary margins are below the level we use to impute knowledge of sales at LTFV, we find that Ehwa, Shinhan, and Hyosung do not satisfy section 733(e)(1)(A)(ii) of the Act.

In determining whether there are ''massive imports'' over a ''relatively short period,'' pursuant to section 733(e)(1)(B) of the Act, the Department normally compares the import volume of the subject merchandise for three months immediately preceding the filing of the petition (*i.e.*, the base period), and three months following the filing of the petition (*i.e.*, the comparison period). However, as stated in section 351.206(i) of the Department's regulations, if the Secretary finds that importers, exporters, or producers had reason to believe, at some time prior to the beginning of the proceeding, that a proceeding was likely, then the Secretary may consider a time period of not less than three months from that earlier time. Imports normally will be considered massive when imports during the comparison period have increased by 15 percent or more compared to imports during the base period.

In this case, the petitioner asserts that it was well known in the industry that a coalition was formed to file a petition, and that certain respondents were in contact with the petitioner regarding the petition status. However, in its November 21, 2005, submission, the petitioner submitted no evidence or documentation to support this assertion. For this reason, we find that importers, exporters, or producers of diamond sawblades from Korea had knowledge that a proceeding was likely as of May 3, 2005, the date of the filing of the petition. On November 22, 2005, the Department requested from Ehwa, Shinhan, and Hyosung monthly shipment data for January 2002 through October 2005 (the most recently completed month for which the respondents have shipment data). In determining whether imports were massive, we selected a five-month period as the basis of our comparison. Specifically, we compared the volume of shipments reported by each respondent from May 2005 through September 2005 (the comparison period) to the volume of shipments by that respondent during December 2004 through April 2005 (the base period). We found that Ehwa's shipments increased by more than 15 percent, while shipment's from Shinhan and Hyosung did not. *See* Critical Circumstances Memorandum at 5 and Attachment 1. Since imports were massive from Ehwa, we find that Ehwa satisfies section 733(e)(1)(B) of the Act while Shinhan and Hyosung do not.

With respect to the companies covered by the ''all others'' rate, it is the Department's normal practice to conduct its critical circumstances analysis of companies in the ''all others'' group based on the experience of investigated companies. *See Notice of Final Determination of Sales at Less Than Fair Value: Certain Steel Concrete Reinforcing Bars from Turkey*, 62 FR 9737, 9741 (March 4, 1997) (*Rebar from Turkey*) (the Department found that critical circumstances existed for the majority of the companies investigated, and therefore concluded that critical circumstances also existed for companies covered by the ''all others'' rate). However, the Department does not automatically extend an affirmative critical circumstances determination to companies covered by the ''all others'' rate. *See Notice of Final Determination of Sales at Less Than Fair Value: Stainless Steel Sheet and Strip in Coils from Japan*, 64 FR 30574 (June 8, 1999) (*Stainless Steel from Japan*). Instead, the Department considers the usual critical circumstances criteria with respect to the companies covered by the ''all others'' rate. Consistent with *Stainless Steel from Japan*, the Department has, in this case, applied the usual critical circumstances criteria to the ''all others'' category for the antidumping investigations of diamond sawblades from Korea.

The dumping margin for the ''all others'' category in the instant case, 10.56 percent, does not exceed the 15 percent threshold necessary to impute knowledge of dumping for CEP sales, nor the 25 percent threshold for imputing knowledge of dumping for EP sales. Therefore, we find there is not a reasonable basis to impute, to importers, knowledge of dumping for the companies covered by the ''all others'' rate. Consequently, we find that knowledge of dumping does not exist with regard to the companies subject to the ''all others'' rate.

With respect to massive imports, two out of the three investigated companies did not have massive imports between the base period and comparison period. We compared the total shipments made by each of the three companies during the base period to the total shipments made by each company in the comparison period and found that the total shipments for the investigated companies did not increase by 15 percent. For this reason, we determine that there have been no massive imports of diamond sawblades from the ''all others'' category. See Critical Circumstances Memorandum at page 6 and Attachment 1.

Given the analysis summarized above, and described in more detail in the Critical Circumstances Memorandum, we preliminarily determine that critical circumstances do not exist for imports of diamond sawblades and parts thereof from Korea for Ehwa, Shinhan, Hyosung, or the companies covered by the ''all others'' rate. We will make a final determination concerning critical circumstances for all producers and exporters of subject merchandise from

Korea when we make our final dumping determination in this investigation.

**Verification**

As provided in section 782(i) of the Act, we will verify all information relied upon in making our final determination.

**Suspension of Liquidation**

In accordance with section 733(e)(2)(A) of the Act, we are directing CBP to suspend liquidation of all imports of subject merchandise that are entered, or withdrawn from warehouse, for consumption on or after the date of publication of this notice in the **Federal Register**. These suspension of liquidation instructions will remain in effect until further notice.

We will instruct CBP to require a cash deposit or the posting of a bond equal to the weighted–average amount by which the NV exceeds CEP, as indicated in the chart below. The weighted–average dumping margins are as follows:

| Exporter/Manufacturer | Weighted–Average Margin Percentage | Critical Circumstances |
|---|---|---|
| Ehwa Diamond Industrial Co., Ltd. | 11.25 | Negative |
| Hyosung Diamond Industrial Co. | 6.15 | Negative |
| Shinhan Diamond Industrial Co., Ltd. | 11.25 | Negative |
| All Others | 10.56 | Negative |

The ''All Others'' rate is calculated exclusive of all *de minimis* margins and margins based entirely on adverse facts available.

**ITC Notification**

In accordance with section 733(f) of the Act, we have notified the ITC of our determination. If our final determination is affirmative, the ITC will determine before the later of 120 days after the date of this preliminary determination or 45 days after our final determination whether these imports materially injure, or threaten material injury to, the U.S. industry.

**Disclosure**

We will disclose the calculations used in our analysis to parties in this proceeding in accordance with 19 CFR 351.224(b).

**Public Comment**

Case briefs for this investigation must be submitted to the Department no later than seven days after the date of the final verification report issued in this proceeding. Rebuttal briefs must be filed five days from the deadline date for case briefs. A list of authorities used, a table of contents, and an executive summary of issues should accompany any briefs submitted to the Department. Executive summaries should be limited to five pages total, including footnotes. Section 774 of the Act provides that the Department will hold a public hearing to afford interested parties an opportunity to comment on arguments raised in case or rebuttal briefs, provided that such a hearing is requested by an interested party. If a request for a hearing is made in this investigation, the hearing will tentatively be held two days after the rebuttal brief deadline date at the U.S. Department of Commerce, 14th Street and Constitution Avenue, NW, Washington, DC 20230. Parties should confirm by telephone the time, date, and place of the hearing 48 hours before the scheduled time.

Interested parties who wish to request a hearing, or to participate if one is requested, must submit a written request to the Assistant Secretary for Import Administration, U.S. Department of Commerce, Room 1870, within 30 days of the publication of this notice. Requests should contain: (1) the party's name, address, and telephone number; (2) the number of participants; and (3) a list of the issues to be discussed. Oral presentations will be limited to issues raised in the briefs.

We will make our final determination no later than 135 days after the publication of this notice in the **Federal Register**.

This determination is published pursuant to sections 733(f) and 777(i) of the Act.

Dated: December 20, 2005.

**Joseph Spetrini,**

*Acting Assistant Secretaryfor Import Administration.*

[FR Doc. E5–8091 Filed 12–28–05; 8:45 am]

BILLING CODE 3510–DS–S

## DEPARTMENT OF COMMERCE

### International Trade Administration

### University of Vermont, et al., Notice of Consolidated Decision on Applications, for Duty–Free Entry of Electron Microscopes

This is a decision consolidated pursuant to Section 6(c) of the Educational, Scientific, and Cultural Materials Importation Act of 1966 (Pub. L. 89–651, 80 Stat. 897; 15 CFR part 301). Related records can be viewed between 8:30 A.M. and 5:00 P.M. in Suite 4100W, Franklin Court Building, U.S. Department of Commerce, 1099 14th Street, NW, Washington, D.C.

*Docket Number*: 05–045. Applicant: University of Vermont, School of Medicine, Burlington, VT 05401. Instrument: Electron Microscope, Model Morgagni 268. Manufacturer: FEI Company, Czech Republic. Intended Use: See notice at 70 FR 71465, November 29, 2005. Order Date: December 29,2004.

*Docket Number*: 05–048. Applicant: Purdue University, West Lafayette, IN 47907. Instrument: Electron Microscope, Model Nova 200 NanoLab. Manufacturer: FEI Company, The Netherlands. Intended Use: See notice at 70 FR 72609, December 6, 2005. Order Date: December 17, 2004.

*Docket Number*: 05–045. Applicant: Purdue University, West Lafayette, IN 47907. Instrument: Electron Microscope, Model Technai $G^2$ F30 S–TWIN. Manufacturer: FEI Company, The Netherlands. Intended Use: See notice at 70 FR 72609, December 6, 2005. Order Date: December 22, 2004.

*Docket Number*: 05–050. Applicant: Ohio State University, Columbus, OH 43210. Instrument: Electron Microscope, Model Titan F30 S–TWIN. Manufacturer: FEI Company, The Netherlands. Intended Use: See notice at 70 FR 72609, December 6, 2005. Order Date: April 14, 2005.

Docket Number: 05–051. Applicant: The Rockefeller University, New York, NY 10021. Instrument: Electron Microscope, Model Technai $G^2$ 12 Spirit Bio Twin. Manufacturer: FEI Company, The Netherlands. Intended Use: See notice at 70 FR 72609. Order Date: April 13, 2005.

*Comments*: None received. Decision: Approved. No instrument of equivalent scientific value to the foreign instrument, for such purposes as these instruments are intended to be used, was being manufactured in the United States at the time the instruments were ordered. Reasons: Each foreign instrument provides a conventional

transmission electron microscope (CTEM) and is intended for research or scientific educational uses requiring a CTEM. We know of no CTEM, or any other instrument suited to these purposes, which was being manufactured in the United States either at the time of order of each instrument OR at the time of receipt of application by U.S. Customs and Border Protection.

**Gerald A. Zerdy,**

*Program Manager, Statutory Import Programs Staff.*

[FR Doc. E5–8092 Filed 12–28–05; 8:45 am]

BILLING CODE 3510–DS–S

## DEPARTMENT OF COMMERCE

### International Trade Administration

### Applications for Duty–Free Entry of Scientific Instruments

Pursuant to Section 6(c) of the Educational, Scientific and Cultural Materials Importation Act of 1966 (Pub. L. 89–651; 80 Stat. 897; 15 CFR part 301), we invite comments on the question of whether instruments of equivalent scientific value, for the purposes for which the instruments shown below are intended to be used, are being manufactured in the United States.

Comments must comply with 15 CFR 301.5(a)(3) and (4) of the regulations and be filed within 20 days with the Statutory Import Programs Staff, U.S. Department of Commerce, Washington, D.C. 20230. Applications may be examined between 8:30 A.M. and 5:00 P.M. in Suite 4100W, U.S. Department of Commerce, Franklin Court Building, 1099 14th Street, NW, Washington, D.C.

*Docket Number*: 05–052. Applicant: University of Texas, Medical Branch at Galveston, 301 University Boulevard, Galveston, TX 77555. Instrument: Electron Microscope, Model JEM–2100. Manufacturer: JEOL Ltd., Japan. Intended Use: The instrument is intended to be used to determine high–resolution, three dimensional structures of large biological entities such as protein, DNA, and RNA assemblies, cellular organelles, and tissues and to develop electron tomography to obtain structures of asymmetrical assemblies and of whole cells or large organelles. It will also be used to train graduate students and post–doctoral scientists in macromolecular structure determination and electron microscopy. Application accepted by Commissioner of Customs: December 1, 2005.

*Docket Number*: 05–053. Applicant: Howard Hughes Medical Institute, 4000 Jones Bridge Road, Chevy Chase, MD 20815–6789. Instrument: Electron Microscope, Model Techni G² F20 TWIN. Manufacturer: FEI Company, The Netherlands. Intended Use: The instrument is intended to be used for studying the structural analysis of biological complexes that makes them cellular units of function, and the structural bases for regulating such complexes including structural characterization of microtubules and their interaction with cellular factors and antimitotic ligands, transcription initiation and regulation, and the molecular machinery involved in transcription–coupled DNA repair. It will also be used for undergraduate and graduate research. Application accepted by Commissioner of Customs: December 7, 2005.

Docket Number: 05–054. Applicant: University of Illinois, Suite 212 Tech Plaza, 616 East Green Street, Champaign, IL 61820. Instrument: Curved Image Plate Detector. Manufacturer: Technische Universitat Darmstadt, Germany. Intended Use: The instrument is intended to be used to develop a fast, high-resolution, x–ray powder diffraction apparatus using a beamline facility at the Advanced Photon Source of Argonne National Laboratory. It will be employed to study in–situ, high temperature (to 2000 degrees C) material properties and behavior of ceramics and ceramic composites including phase transformation mechanisms (*e.g.*, martensitic), the kinetics of phase transformations and the chemical reactions of binary and ternary mixtures of ceramic materials, and phase equilibria and phase diagrams with the general goal of developing tougher and stronger high temperature structural composites. Application accepted by Commissioner of Customs: December 7, 2005.

*Docket Number*: 05–055. Applicant: Rutgers, The State University of New Jersey, 3 Rutgers Plaza, New Brunswick, NJ 08901–88559. Instrument: Near–field Optical Microscope for integration with micro–Raman. Manufacturer: Nanonics Imaging Ltd., Israel. Intended Use: The instrument is intended to be used to image the structure and map the chemistry of example nanostructured materials (such as silicon wafers)in a variety of undergraduate laboratory courses involving nanomaterials. Application accepted by Commissioner of Customs: December 9, 2005.

**DOCKET NUMBER**: 05–056. Applicant: University of Illinois at Chicago, Department of Physics (m/c 273), 845 West Taylor Street, Chicago, IL 60607–7059. Instrument: Magnesium Fluoride Windows. Manufacturer: Laser–Laboratorium, Gottingen, Germany. Intended Use: The instrument is intended to be used to provide amplification of a light beam to a power above 10 to the 12th W for studies including the following:

1. Measuring fragments such as ions and photons of materials irradiated directly with an intense ultraviolet beam
2. Determining the energy flow and the nature of secondary radiation produced
3. Instrumental control of the focus, thereby maximizing the intensity at which such experiments can be conducted
4. Studying absorption and excitation.

The instrument will also be used for instruction of graduate students. Application accepted by Commissioner of Customs: December 9, 2005

**Gerald A. Zerdy,**

*Program Manager, Statutory Import Programs Staff.*

[FR Doc. E5–8093 Filed 12–28–05; 8:45 am]

BILLING CODE 3510–DS–S

## DEPARTMENT OF COMMERCE

### International Trade Administration

### United States Travel and Tourism Advisory Board; Meeting

**AGENCY:** International Trade Administration, U.S. Department of Commerce.

**ACTION:** Notice of an open meeting.

**SUMMARY:** The United States Travel and Tourism Advisory Board (''Board'') will hold a meeting to discuss topics related to the travel and tourism industry. The meeting will include discussion of the enhanced mandate of the Board, the international advertising and promotion campaign which seeks to encourage individuals to travel to the United States for the express purpose of engaging in tourism, and future issues and initiatives the Board may pursue. The meeting will be open to the public. Time will be permitted for public comment, which is limited to three minutes per speaker. To apply for public comment, please contact J. Marc Chittum, U.S. Travel and Tourism Advisory Board, Room 4043, Washington, DC 20230, telephone (202) 482–4501, or e-mail *Marc.Chittum@mail.doc.gov,* no later than close of business, Tuesday, January 10, 2006.

The Board is mandated by Public Law 108–7, Section 210, was initially chartered in 2003, and was re-chartered on September 21, 2005, for a two-year period to end September 20, 2007.

**DATES:** January 19, 2006.

*Time:* 8 a.m. Central Standard Time.

**ADDRESSES:** New Orleans Marriott, 555 Canal Street, New Orleans, Louisiana, 70130. This program will be physically accessible to people with disabilities. Requests for sign language interpretation or other auxiliary aids should be submitted no later than November 25, 2005, to J. Marc Chittum, U.S. Travel and Tourism Advisory Board, Room 4043, 1401 Constitution Avenue, NW., Washington, DC 20230, telephone (202) 482–4501, or e-mail *Marc.Chittum@mail.doc.gov.* Seating is limited and will be on a first come, first served basis.

**FOR FURTHER INFORMATION CONTACT:** J. Marc Chittum, U.S. Travel and Tourism Advisory Board, Room 4043, 1401 Constitution Avenue, NW., Washington, DC 20230, telephone 202–482–4501, or e-mail *Marc.Chittum@mail.doc.gov.*

Dated: December 22, 2005.

**J. Marc Chittum,**

*Designated Federal Officer, U.S. Travel and Tourism Advisory Board.*

[FR Doc. 05–24594 Filed 12–28–05; 8:45 am]

**BILLING CODE 3510–DR–P**

## DEPARTMENT OF COMMERCE

### Patent and Trademark Office

### Submission for OMB Review; Comment Request

The United States Patent and Trademark Office (USPTO) has submitted to the Office of Management and Budget (OMB) for clearance the following proposal for collection of information under the provisions of the Paperwork Reduction Act (44 U.S.C. Chapter 35).

*Agency:* United States Patent and Trademark Office (USPTO).

*Title:* Patent Processing (Updating).

*Form Number(s):* PTO/SB/08, PTO/SB/17i, PTO/SB/17P, PTO/SB/21–27, PTO/SB/24B, PTO/SB/30–32, PTO/SB/35–39, PTO/SB/42–43, PTO/SB/61–64, PTO/SB/64a, PTO/SB/67–68, PTO/SB/91–92, PTO/SB/96–97, PTO–2053–A/B, PTO–2054–A/B, PTO–2055–A/B, PTOL/413A.

*Agency Approval Number:* 0651–0031.

*Type of Request:* Revision of a currently approved collection.

*Burden:* 2,807,641 hours.

*Number of Respondents:* 2,317,539 responses.

*Avg. Hours per Response:* 1 minute 48 seconds to 12 hours. The USPTO estimates that it will take 12 hours to complete the examination support document covering the independent claims and the designated dependent claims; 2 hours to complete the petition (filed in a continuation or continuation-in-part application) containing a showing as to why the amendment, argument, or evidence could not have been submitted prior to the close of prosecution in the prior-filed application; 2 hours to complete the petition (filed with a request for continued examination) with a showing as to why the amendment, argument, or evidence could not have been submitted prior to the close of prosecution in the application; and 1 hour to complete the explanation (filed in a nonprovisional application) of either how the claims are patentably distinct or why there are patentably indistinct claims filed in multiple applications. This includes time to gather the necessary information, create the documents, and submit the completed request.

*Needs and Uses:* The proposed examination support document covering the independent claims and designated dependent claims will assist the applicant in preparing a schedule of claims that are patentable (i.e., novel and non-obvious) over the prior art, and will assist the USPTO in the examination process in determining whether the claims are patentable over the prior art. The proposed petition for a continuation or continuation-in-part application showing why the amendment, argument, or evidence could not have been submitted prior to the close of prosecution in the application will assist the USPTO in determining whether the continuation or continuation-in-part application or request for continued examination is a bona fide attempt to advance the application to final agency action or is simply being filed to delay examination. The proposed explanation in nonprovisional applications, when multiple applications having a common inventor and a common assignee have been filed on the same day, of either how the claims are patentably distinct or why there are patentably indistinct claims filed in multiple applications, will assist the USPTO in determining whether double patenting exists and whether the USPTO should merge the applications. The USPTO is submitting this collection in support of a notice of proposed rulemaking entitled ''Changes to Practice for the Examination of Claims in Patent Applications'' (RIN 0651–AB94); and a notice of proposed rulemaking entitled ''Changes to Practice for Continuing Applications, Requests for Continued Examination Practice, and Applications Containing Patentably Indistinct Claims'' (RIN 0651–AB93). There are no forms associated with this final rulemaking.

*Affected Public:* Individuals or households; business or other for-profit; not-for-profit institutions; farms, the Federal Government, and State, Local or Tribal Governments.

*Frequency:* On occasion.

*Respondent's Obligation:* Required to obtain or retain benefits.

*OMB Desk Officer:* David Rostker, (202) 395–3897.

Copies of the above information collection proposal can be obtained by any of the following methods:

- *E-mail: Susan.Brown@uspto.gov.* Include ''0651–0031 copy request'' in the subject line of the message.
- *Fax:* 571–273–0112, marked to the attention of Susan Brown.
- *Mail:* Susan K. Brown, Records Officer, Office of the Chief Information Officer, Office of Data Architecture and Services, Data Administration Division, U.S. Patent and Trademark Office, P.O. Box 1450, Alexandria, VA 22313–1450.

Written comments and recommendations for the proposed information collection should be sent on or before January 30, 2006, to David Rostker, OMB Desk Officer, Room 10202, New Executive Office Building, 725 17th Street, NW., Washington, DC 20503.

Dated: December 22, 2005.

**Susan K. Brown,**

*Records Officer, USPTO, Office of Data Architecture and Services, Data Administration Division.*

[FR Doc. E5–8018 Filed 12–28–05; 8:45 am]

**BILLING CODE 3510–16–P**

## DEPARTMENT OF COMMERCE

### Patent and Trademark Office

### Submission for OMB Review; Comment Request

The United States Patent and Trademark Office (USPTO) has submitted to the Office of Management and Budget (OMB) for clearance the following proposal for collection of information under the provisions of the Paperwork Reduction Act (44 U.S.C. Chapter 35).

*Agency:* United States Patent and Trademark Office (USPTO).

*Title:* Patent and Trademark Financial Transactions (formerly Payment of Patent and Trademark Office Fees by Credit Card).

*Form Number(s):* PTO–2038, PTO–2231, PTO–2232, PTO–2233, PTO–2234, PTO–2236.

*Agency Approval Number:* 0651–0043.

*Type of Request:* Revision of a currently approved collection.

*Burden:* 58,116 hours annually.

*Number of Respondents:* 1,928,705 responses per year.

*Avg. Hours Per Response:* The USPTO estimates that it will take the public approximately two to four minutes (0.03 to 0.07 hours) to gather the necessary information, prepare, and submit the items in this collection.

*Needs and Uses:* Under 35 U.S.C. 41 and 15 U.S.C. 1113, as implemented in 37 CFR 1.16–1.28, 2.6–2.7, and 2.206–2.209, the USPTO charges fees for processing and other services related to patents, trademarks, and information products. Customers may pay fees by credit card, USPTO deposit account, or electronic funds transfer (EFT). The public uses this collection to pay patent and trademark fees by credit card, to establish and manage USPTO deposit accounts, to set up a user profile for EFT transactions, and to request refunds. In addition to the existing Credit Card Payment Form (PTO–2038) and Electronic Credit Card Payment Form (PTO–2231), the USPTO is adding the Deposit Account Application Form (PTO–2232), Deposit Account Replenishments, the Electronic Deposit Account Replenishment Form (PTO–2233), the Deposit Account Closure Request Form (PTO–2234), the EFT User Profile Form (PTO–2236), and Refund Requests to this collection. The USPTO does not currently provide official forms for paper Deposit Account Replenishments or Refund Requests.

*Affected Public:* Individuals or households, businesses or other for-profits, not-for-profit institutions, farms, the Federal Government, and state, local or tribal governments.

*Frequency:* On occasion.

*Respondent's Obligation:* Required to obtain or retain benefits.

*OMB Desk Officer:* David Rostker, (202) 395–3897.

Copies of the above information collection proposal can be obtained by any of the following methods:

- *E-mail: Susan.Brown@uspto.gov.* Include ''0651–0043 copy request'' in the subject line of the message.
- *Fax:* 571–273–0112, marked to the attention of Susan Brown.
- *Mail:* Susan K. Brown, Records Officer, Office of the Chief Information Officer, Office of Data Architecture and Services, Data Administration Division, U.S. Patent and Trademark Office, P.O. Box 1450, Alexandria, VA 22313–1450.

Written comments and recommendations for the proposed information collection should be sent on or before January 30, 2006 to David Rostker, OMB Desk Officer, Room 10202, New Executive Office Building, 725 17th Street, NW., Washington, DC 20503.

Dated: December 21, 2005.

**Susan K. Brown,**

*Records Officer, USPTO, Office of the Chief Information Officer, Office of Data Architecture and Services, Data Administration Division.*

[FR Doc. E5–8022 Filed 12–28–05; 8:45 am]

BILLING CODE 3510–16–P

## DEPARTMENT OF DEFENSE

### Office of the Secretary

### 36(b)(1) Arms Sales Notification (Transmittal No. 06–12)

**AGENCY:** Department of Defense, Defense Security Cooperation Agency.

**ACTION:** Notice.

**SUMMARY:** The Department of Defense is publishing the unclassified text of a section 36(b)(1) arms sales notification. This is published to fulfill the requirements of section 155 of Public Law 104–164 dated 21 July 1996.

**FOR FURTHER INFORMATION CONTACT:** Ms. J. Hurd, DSCA/DBO/ADM, (703) 604–6575.

The following is a copy of a letter to the Speaker of the House of Representatives, Transmittal 06–12 with attached transmittal, policy justification, and Sensitivity of Technology.

Dated: December 21, 2005.

**L.M. Bynum,**

*OSD Federal Register Liaison Officer, Department of Defense.*

BILLING CODE 5001–06–M

DEFENSE SECURITY COOPERATION AGENCY
WASHINGTON, DC 20301-2800

16 DEC 2

**In reply refer to:**
**I-05/007720**

**The Honorable J. Dennis Hastert**
**Speaker of the House of Representatives**
**Washington, D.C. 20515-6501**

**Dear Mr. Speaker:**

**Pursuant to the reporting requirements of Section 36(b)(1) of the Arms Export Control Act, as amended, we are forwarding herewith Transmittal No. 06-12, concerning the Department of the Army's proposed Letter(s) of Offer and Acceptance to Pakistan for defense articles and services estimated to cost $56 million. Soon after this letter is delivered to your office, we plan to notify the news media.**

**Sincerely,**

Richard J. Millies
Deputy Director

**Enclosures:**
1. **Transmittal**
2. **Policy Justification**

**Same ltr to:**

| House | Senate |
|---|---|
| Committee on International Relations | Committee on Foreign Relations |
| Committee on Armed Services | Committee on Armed Services |
| Committee on Appropriations | Committee on Appropriations |

Transmittal No. 06-12

Notice of Proposed Issuance of Letter of Offer
Pursuant to Section 36(b)(1)
of the Arms Export Control Act, as amended

(i) Prospective Purchaser: Pakistan

(ii) Total Estimated Value:

| | |
|---|---|
| Major Defense Equipment* | $34 million |
| Other | $22 million |
| TOTAL | $56 million |

(iii) Description and Quantity or Quantities of Articles or Services under Consideration for Purchase: 115 M109A5 155mm self-propelled howitzers, spare and repair parts, support and test equipment, publications and technical documentation, personnel training and training equipment, Quality Assurance Team, U.S. Government logistics personnel services, and other related elements of logistics support.

(iv) Military Department: Army (VZS)

(v) Prior Related Cases, if any: none

(vi) Sales Commission, Fee, etc., Paid, Offered, or Agreed to be Paid: none

(vii) Sensitivity of Technology Contained in the Defense Article or Defense Services Proposed to be Sold: none

(viii) Date Report Delivered to Congress: 16 DEC 05

* as defined in Section 47(6) of the Arms Export Control Act.

## POLICY JUSTIFICATION

### Pakistan - M109A5 155mm Self-propelled Howitzers

**The Government of Pakistan has requested a possible sale of 115 M109A5 155mm self-propelled howitzers, spare and repair parts, support and test equipment, publications and technical documentation, personnel training and training equipment, Quality Assurance Team, U. S. Government logistics personnel services, and other related elements of logistics support. The estimated cost is $56 million.**

**This proposed sale will contribute to the foreign policy and national security of the United States by helping to improve the security of a friendly country that continues to be a key ally in the global war on terrorism.**

**Pakistan currently operates M109A2 self-propelled howitzers and will use this new procurement to re-equip existing units and retire older artillery pieces, modernizing the Army's fire support capability. Pakistan will use these howitzers to improve its current fleet of ground defense equipment. The proposed equipment will assist Pakistan in improving its internal command and control of the mountain range bordering its country. Pakistan will have no difficulty absorbing the howitzers into its armed forces.**

**The proposed sale of this equipment and support will not affect the basic military balance in the region.**

**No contractor is involved for this purchase of the howitzers. Equipment is considered long supply and is no longer utilized by the U.S. Government.**

**There will be a Technical Assistance Field Team (TAFT) and U.S. Government Quality Assurance Team for one year to check out the equipment. A TAFT will participate for two-week intervals twice annually to participate in program management and technical reviews.**

**There will be no adverse impact on U.S. defense readiness as a result of this proposed sale.**

[FR Doc. 05–24571 Filed 12–28–05; 8:45 am]
BILLING CODE 5001–06–C

---

**DEPARTMENT OF DEFENSE**

**Office of the Secretary**

**Public Meeting of the Defense Advisory Committee on Military Compensation**

**AGENCY:** Department of Defense.

**ACTION:** Notice of meeting.

**SUMMARY:** On Tuesday, January 24, 2006, from 10 a.m. to 12 p.m., the Committee will discuss various aspects of the military pay and benefits system, such as compensation that recognizes danger, risk, and hardship that members experience; the appropriate balance between in-service and post-service compensation; the appropriate balance between cash and non-cash compensation; and the structure, level, and relevance of compensation for the Reserve and Guard, considering their changed utilization. Members of the Public may attend but participation in Committee discussions by the Public will not be permitted. Written submissions of data, information, and views may be sent to the Committee contact person at the address shown. Submissions should be received by close of business January 16, 2006 to allow time for distribution to the committee members prior to the meeting. Persons attending are advised that the Committee is not responsible for providing access to electrical outlets.

**DATES:** Tuesday, January 24, 2006, from 10 a.m. to 12 p.m.

*Location:* Crystal City Hilton, 2399 Jefferson Davis Highway, Arlington, VA 22202.

**FOR FURTHER INFORMATION CONTACT:** LTC Janet Fenton AT 703–699–2712, Designated Federal Official, Defense Advisory Committee on Military

Compensation, 2521 S. Clark Street, Arlington, VA 22202.

*Name of Committee:* The Defense Advisory Committee on Military Compensation (DACMC).

*Committee Membership:* ADM (Ret) Donald L. Pilling. Members: Dr. John P. White; Gen (Ret) Lester L. Lyles; Mr. Frederic W. Cook; Dr. Walter Oi; Dr. Martin Anderson; and Mr. Joseph E. Jannotta.

*General Function of the Committee:* The Committee will provide the Secretary of Defense, through the Under Secretary of Defense (Personnel and Readiness), with assistance and advice on matters pertaining to military compensation. The Committee will examine what types of military compensation and benefits are the most effective for meeting the needs of the Nation.

Dated: December 22, 2005.

**L.M. Bynum,**

*Alternate OSD Federal Register, Liaison Officer, Department of Defense.*

[FR Doc. 05–24572 Filed 12–28–05; 8:45 am]

**BILLING CODE 5001–06–M**

## DEPARTMENT OF DEFENSE

### Office of the Secretary

### Defense Science Board; Meetings

**AGENCY:** Department of Defense.

**ACTION:** Notice of Advisory Committee Meetings.

**SUMMARY:** The Defense Science Board Task Force on Nuclear Capabilities will meet in closed session on January 4, 2006, at the Institute for Defense Analysis (IDA), 4850 Mark Center Drive, Alexandria, VA. This meeting will be an Executive Session for draft report writing and discussion.

The mission of the Defense Science Board is to advise the Secretary of Defense and the Under Secretary of Defense for Acquisition, Technology & Logistics on scientific and technical matters as they affect the perceived needs of the Department of Defense. At these meetings, the Defense Science Board Task Force will: Assess the current plan for sustaining the nuclear weapons stockpile and make recommendations for ensuring the future reliability, safety, security, and relevance of the nuclear weapons stockpile for the 21st century; examine the DoD role in defining needs in the nuclear weapons stockpile and recommend changes in institutional arrangements to ensure an appropriate DoD role; assess progress towards the goal of an integrated new triad of strike capabilities (nuclear, advanced conventional, and non-kinetic) within the new triad of strike, defense and infrastructure; examine a wide range of alternative institutional arrangements that could provide for more efficient management of the nuclear enterprise; examine approaches to evolving the stockpile with weapons that are simpler to manufacture and that can be sustained with a smaller, less complex, less expensive design, development, certification and production enterprise; and examine plans to transform the nuclear weapons production complex to provide a capability to respond promptly to changes in the threat environment with new designs or designs evolved with previously tested nuclear components.

In accordance with Section 10(d) of the Federal Advisory Committee Act, Public Law 92–463, as amended (5 U.S.C. App. II), it has been determined that these Defense Science Board Task Force meetings concern matters listed in 5 U.S.C. 552b(c)(1) and that, accordingly, the meetings will be closed to the public.

**FOR FURTHER INFORMATION CONTACT:** LTC Scott Dolgoff, USA, Defense Science Board, 3140 Defense Pentagon, Room 3C553, Washington, DC 20301–3140, via e-mail at *scott.dolgoff@osd.mil*, or via phone at (703) 571–0082.

Due to scheduling difficulties, there is insufficient time to provide timely notice required by section 10(a) of the Federal Advisory Committee Act and subsection 102–3.150(b) of the GSA Final Rule on Federal Advisory Committee Management, 41 CFR 102–3.150(b), which further requires publication at least 15 calendar days prior to the meeting.

Dated: December 22, 2005.

**L.M. Bynum,**

*OSD Federal Register Liaison Officer, Department of Defense.*

[FR Doc. 05–24568 Filed 12–28–05; 8:45 am]

**BILLING CODE 5001–06–M**

## DEPARTMENT OF DEFENSE

### Office of the Secretary

### Meeting of the Defense Department Advisory Committee on Women in the Services (DACOWITS)

**AGENCY:** Department of Defense.

**ACTION:** Notice.

**SUMMARY:** Pursuant to section 10(A), Public Law 92–463, as amended, notice is hereby given of a forthcoming meeting of the Defense Department Advisory Committee on Women in the Services (DACOWITS). The purpose of the Committee meeting is to t. The meeting is open to the public, subject to the availability of space.

Interested persons may submit a written statement for consideration by the Committee and make an oral presentation of such. Persons desiring to make an oral presentation or submit a written statement to the Committee must notify the point of contact listed below no later than 5 p.m., 3 January 2006. Oral presentation by members of the public will be permitted only on Monday, 9 January 2006 from 4:45 p.m. to 5 p.m. before the full Committee. Presentations will be limited to two minutes. Number of oral presentations to be made will depend on the number of requests received from members of the public. Each person desiring to make an oral presentation must provide the point of contact listed below with one (1) copy of the presentation by 5 p.m., 3 January 2006 and bring 35 copies of any material that is intended for distribution at the meeting. Persons submitting a written statement must submit 35 copies of the statement to the DACOWITS staff by 5 p.m. on 3 January 2006.

**DATES:** 9 January 2006, 8:30 a.m.–5 p.m.; 10 January 2006, 8:30 a.m.–5 p.m.; 11 January 2006, 8:30 a.m.–5 p.m.

*Location:* Double Tree Hotel, Crystal City, National Airport, 300 Army Navy Drive, Arlington, VA 22202.

**FOR FURTHER INFORMATION CONTACT:** MSgt Gerald Posey, USA DACOWITS, 4000 Defense Pentagon, Room 2C548A, Washington, DC 20301–4000. Telephone (703) 097–2122: Fax (703) 614–6233.

**SUPPLEMENTARY INFORMATION:** Meeting agenda.

**Monday, 9 January 2006, 8:30 a.m.–5 p.m.**

Welcome & Administrative Remarks
New Member Orientation
Public Forum

**Tuesday, 10 January 2006, 8:30 a.m.–5 p.m.**

New Member Orientation

**Wednesday, 11 January 2006, 8:30 a.m.–5 p.m.**

New Member Orientation

**Note:** Exact order may vary.

Dated: December 21, 2005.

**L. M. Bynum,**

*Alternate ODS Federal Register Liaison Officer, Department of Defense.*

[FR Doc. 05–24573 Filed 12–28–05; 8:45 am]

**BILLING CODE 5001–06–M**

## DEPARTMENT OF DEFENSE

### Office of the Secretary

### Privacy Act of 1974; System of Records

**AGENCY:** Office of the Secretary, DoD.

**ACTION:** Notice to amend systems of records.

**SUMMARY:** The Office of the Secretary of Defense is amending a system of records notice in its existing inventory of record systems subject to the Privacy Act of 1974, (5 U.S.C. 552a), as amended.

**DATES:** This proposed action will be effective without further notice on January 30, 2006 unless comments are received which result in a contrary determination.

**ADDRESSES:** Send comments to the OSD Privacy Act Coordinator, Records Management Section, Washington Headquarters Services, 1155 Defense Pentagon, Washington, DC 20301–1155.

**FOR FURTHER INFORMATION CONTACT:** Ms. Juanita Irvin at (703) 696–4940.

**SUPPLEMENTARY INFORMATION:** The Office of the Secretary of Defense systems of records notices subject to the Privacy Act of 1974, (5 U.S.C. 552a), as amended, have been published in the **Federal Register** and are available from the address above.

The specific changes to the record system being amended are set forth below followed by the notice, as amended, published in its entirety. The proposed amendments are not within the purview of subsection (r) of the Privacy Act of 1974, (5 U.S.C. 552a), as amended, which requires the submission of a new or altered system report.

Dated: December 22, 2005.

**Linda Bynum,**

*OSD Federal Register Liaison Officer, Department of Defense.*

### DWHS P27

**SYSTEM NAME:**

Department of Defense (DOD) Pentagon Building Pass File (August 25, 1995, 60 FR 44321).

**CHANGES:**

* * * * *

**SYSTEM LOCATION:**

Delete entry and replace with: ''Pentagon Force Protection Agency, Security Services Directorate, Pentagon Access Control Division, 9000 Defense Pentagon, Washington, DC 20301–9000.''

* * * * *

**PURPOSE(S):**

Delete entry and replace with: ''This information is used by officials of Pentagon Force Protection Agency, Defense Facilities Directorate and Washington Headquarters Services to maintain a listing of personnel who are authorized a DoD Pentagon Building Pass or access to the Pentagon.''

* * * * *

**RETENTION AND DISPOSAL:**

Delete entry and replace with: ''Identification credentials including cards, badges, parking permits, photographs, agency permits to operate motor vehicles, and property, dining room and visitors passes, and other identification credentials. Destroy credentials 3 months after return to issuing office.''

**SYSTEM MANAGER(S) AND ADDRESS:**

Delete entry and replace with: ''Pentagon Force Protection Agency, Security Services, Security Services Directorate, Pentagon Access Control Division, Room 1F1084, 9000 Defense Pentagon, Washington, DC 20301–9000.''

**NOTIFICATION PROCEDURE:**

Delete address and replace with: ''Pentagon Force Protection Agency, Security Services, Security Services Directorate, Pentagon Access Control Division, Room 1F1084, 9000 Defense Pentagon, Washington, DC 20301–9000.''

**RECORD ACCESS PROCEDURES:**

Delete address and replace with: ''Pentagon Force Protection Agency, Security Services, Security Services Directorate, Pentagon Access Control Division, Room 1F1084, 9000 Defense Pentagon, Washington, DC 20301–9000.''

* * * * *

### DWHS P27

**SYSTEM NAME:**

Department of Defense (DoD) Pentagon Building Pass File.

**SYSTEM LOCATION:**

Pentagon Force Protection Agency, Security Services Directorate, Pentagon Access Control Division, 9000 Defense Pentagon, Washington, DC 20301–9000.

**CATEGORIES OF INDIVIDUALS COVERED BY THE SYSTEM:**

Any Department of Defense military or civilian employee sponsored by the Department of Defense, or other persons who have reason to enter the Pentagon for official Department of Defense business, and who therefore require an entry pass.

**CATEGORIES OF RECORDS IN THE SYSTEM:**

File contains name, sponsoring office of the Department of Defense and activities serviced by Washington Headquarters Services (WHS), sex, height, weight, date, place of birth, Social Security Number, race, citizenship, and access investigation completion date, access level, previous pass issuances, authenticating official, total personnel from all sites, and audit counts.

**AUTHORITY FOR MAINTENANCE OF THE SYSTEM:**

5 U.S.C. 301, Departmental Regulations; E.O. 9397 (SSN) and E.O. 12958.

**PURPOSE(S):**

This information is used by officials of Pentagon Force Protection Agency, Defense Facilities Directorate and Washington Headquarters Services to maintain a listing or personnel who are authorized a DoD Pentagon Building Pass or access to the Pentagon.

**ROUTINE USES OF RECORDS MAINTAINED IN THE SYSTEM, INCLUDING CATEGORIES OF USERS AND THE PURPOSES OF SUCH USES:**

In addition to those disclosures generally permitted under 5 U.S.C. 552(b) of the Privacy Act, these records or information contained therein may specifically be disclosed outside the DoD as a routine use pursuant to 5 U.S.C. 552(b)(3) as follows:

The 'Blanket Routine Uses' set forth at the beginning of OSD's compilation of systems of records notices apply to this system.

**POLICIES AND PRACTICES FOR STORING, RETRIEVING, ACCESSING, RETAINING, AND DISPOSING OF RECORDS IN THE SYSTEM:**

**STORAGE:**

Electronic database.

**RETRIEVABILITY:**

Electronic database accessible by individual's name, Social Security Number and pass number.

**SAFEGUARDS:**

Secure room. Building has DoD Police Officers.

**RETENTION AND DISPOSAL:**

Identification credentials including cards, badges, parking permits, photographs, agency permits to operate motor vehicles, and property, dining room and visitors passes, and other identification credentials. Destroy credentials 3 months after return to issuing office.

**SYSTEM MANAGER(S) AND ADDRESS:**

Pentagon Force Protection Agency, Security Services, Security Services

Directorate, Pentagon Access Control Division, Room 1F1084, 9000 Defense Pentagon, Washington, DC 20301–9000.

**NOTIFICATION PROCEDURE:**

Individuals seeking to determine whether information about themselves is contained in this system should address written inquiries to Pentagon Force Protection Agency, Security Services, Security Services Directorate, Pentagon Access Control Division, Room 1F1084, 9000 Defense Pentagon, Washington, DC 20301–9000.

**RECORD ACCESS PROCEDURES:**

Individuals seeking access to information about themselves contained in this system should address written inquires to Pentagon Force Protection Agency, Security Services, Security Services Directorate, Pentagon Access Control Division, Room 1F1084, 9000 Defense Pentagon, Washington, DC 20301–9000.

**CONTESTING RECORD PROCEDURES:**

The OSD rules for accessing records, for contesting contents and appealing initial agency determinations are published in OSD Administrative Instruction 81; 32 CFR part 311; or may be obtained from the system manager.

**RECORD SOURCE CATEGORIES:**

All data maintained in the system is received voluntarily from individual DoD Pentagon Building Pass Applications.

**EXEMPTIONS CLAIMED FOR THE SYSTEM:**

None.

[FR Doc. 05–24570 Filed 12–28–05; 8:45 am]

BILLING CODE 5001–06–M

## DEPARTMENT OF DEFENSE

### Department of the Navy

### Privacy Act of 1974; System of Records

**AGENCY:** Department of the Navy, DoD.

**ACTION:** Notice to amend systems of records.

**SUMMARY:** The Department of the Navy is amending a system of records notice in its existing inventory of record systems subject to the Privacy Act of 1974, (5 U.S.C. 552a), as amended.

**DATES:** The proposed action will be effective without further notice on January 30, 2006 unless comments are received which result in a contrary determination.

**ADDRESSES:** Send comments to the Department of the Navy, PA/FOIA Policy Branch, Chief of Naval Operations (DNS–36), 2000 Navy Pentagon, Washington, DC 20350–2000.

**FOR FURTHER INFORMATION CONTACT:** Mrs. Doris Lama at (202) 685–645.

**SUPPLEMENTARY INFORMATION:** The Department of the Navy systems of records notices subject to the Privacy Act of 1974, (5 U.S.C. 552a), as amended, have been published in the **Federal Register** and are available from the address above.

The specific changes to the record system being amended are set forth below followed by the notice, as amended, published in its entirety. The proposed amendments are not within the purview of subsection (r) of the Privacy Act of 1974, (5 U.S.C. 552a), as amended, which requires the submission of a new or altered system report.

Dated: December 22, 2005.

**Linda Bynum,**

*OSD Federal Register Liaison Officer, Department of Defense.*

**NM05720–1**

**SYSTEM NAME:**

FOIA Request Files and Tracking System (November 16, 2004, 69 FR 67128).

**CHANGES:**

* * * * *

**SYSTEM NAME:**

Delete entry and replace with: ''FOIA Request/Appeal Files and Tracking System''.

* * * * *

**CATEGORIES OF RECORDS IN THE SYSTEM:**

Delete first sentence and replace with: ''FOIA request/appeal, copies of responsive records (redacted and released), correspondence generated as a result of the request, cost forms, memoranda, legal opinions, messages, and miscellaneous documents which related to the request.''

**RETRIEVABILITY:**

Delete entry and replace with: ''Name of requester/appellant; year request/appeal filed; serial number of response letter; case file number; etc.''

* * * * *

**SYSTEM MANAGER(S) AND ADDRESS:**

Delete entry and replace with: ''Policy Official: Chief of Naval Operations (DNS–36), 2000 Navy Pentagon, Washington, DC 20350–2000.

Record Holders: Organizational elements of the Department of the Navy. Official mailing addresses are published in the Standard Navy Distribution List (SNDL) that is available at *http://neds.daps.dla.mil/sndl.htm.*

**APPELLATE AUTHORITIES:**

Office of the Judge Advocate General (Code 14), 1322 Patterson Avenue SE., Suite 3000, Washington, Navy Yard, DC 20374–5066.

General Counsel of the Navy (FOIA), 1000 Navy Pentagon, Washington, DC 20350–1000.''

**NOTIFICATION PROCEDURE:**

Delete entry and replace with: ''Individuals seeking to determine whether information about themselves is contained in this system should address written inquires to the Freedom of Information Act coordinator, commanding officer of the activity in question, or in the case of appeals to the appropriate appellate authority. Official mailing addresses are published in the Standard Navy Distribution List (SNDL) that is available at *http://neds.daps.dla.mil/sndl.htm.*

The request should contain the full name of the individual and one or more of the following kinds of information: year request/appeal filed; serial number of response letter; and/or case file number. Requests must also be signed.''

**RECORD ACCESS PROCEDURES:**

Delete entry and replace with: ''Individuals seeking access to information about themselves contained in this system commanding officer of the activity in question, or in the case of appeals to the appropriate appellate authority. Official mailing addresses are published in the Standard Navy Distribution List (SNDL) that is available at *http://neds.daps.dla.mil/sndl.htm.*

The request should contain the full name of the individual and one or more of the following kinds of information: year request/appeal filed; serial number of response letter; and/or case file number. Requests must also be signed.''

* * * * *

**NM05720–1**

**SYSTEM NAME:**

FOIA Request/Appeal Files and Tracking System.

**SYSTEM LOCATION:**

Organizational elements of the Department of the Navy. Official mailing addresses are published in the Standard Navy Distribution List (SNDL) that is available at *http://neds.daps.dla.mil/sndl.htm.*

**CATEGORIES OF INDIVIDUALS COVERED BY THE SYSTEM:**

Individuals who request access to information under the provisions of the Freedom of Information Act (FOIA) or make an appeal under the FOIA.

**CATEGORIES OF RECORDS IN THE SYSTEM:**

FOIA request/appeal, copies of responsive records (redacted and released), correspondence generated as a result of the request, cost forms, memoranda, legal opinions, messages, and miscellaneous documents which related to the request. Database used to track requests from start to finish and formulate response letters may contain names, addresses, and other personal identifiers of the individual requester.

**AUTHORITY FOR MAINTENANCE OF THE SYSTEM:**

5 U.S.C. 552, the Freedom of Information Act, as amended; 10 U.S.C. 5013, Secretary of the Navy; 10 U.S.C. 5041, Headquarters, Marine Corps; E.O. 9397 (SSN); and Secretary of the Navy Instruction 5720.42F, Department of the Navy Freedom of Information Act Program.

**PURPOSE(S):**

To track, process, and coordinate requests/appeals/litigation made under the provisions of the FOIA.

**ROUTINE USES OF RECORDS MAINTAINED IN THE SYSTEM, INCLUDING CATEGORIES OF USERS AND THE PURPOSES OF SUCH USES:**

In addition to those disclosures generally permitted under 5 U.S.C. 552a(b) of the Privacy Act, these records or information contained therein may specifically be disclosed outside the DoD as a routine use pursuant to 5 U.S.C. 552a(b)(3) as follows:

To individuals who file FOIA requests for access to information on who has made FOIA requests and/or what is being requested under FOIA.

The DoD 'Blanket routine Uses' set forth at the beginning of the Navy's compilation of systems of records notices also apply to this system.

**POLICES AND PRACTICES FOR STORING, RETRIEVING, ACCESSING, RETAINING, AND DISPOSING OF RECORDS IN THE SYSTEM:**

**STORAGE:**

Maintained in file folders, microform, microfilm, manual/computerized databases, and/or optical disk.

**RETRIEVABILITY:**

Name of requester/appellant; year request/appeal filed; serial number of response letter; case file number; etc.

**SAFEGUARDS:**

Records are accessed by custodian of the record system and by persons responsible for servicing the record system in performance of their official duties. Records are stored in cabinets or rooms, which are not viewable by individuals who do not have a need to know. Computerized databases are password protected and accessed by individuals who have a need to know.

**RETENTION AND DISPOSAL:**

Granted requests, no record responses, and/or responses to requesters who fail to adequately describe the records being sought or fail to state a willingness to pay processing fees are destroyed 2 years after date of reply. Requests which are denied in whole or in part, appealed, or litigated are destroyed 6 years after final action.

**SYSTEM MANAGER(S) AND ADDRESS:**

Policy Official: Chief of Naval Operations (DNS–36), 2000 Navy Pentagon, Washington, DC 20350–2000.

Record Holders: Organizational elements of the Department of the Navy. Official mailing addresses are published in the Standard Navy Distribution List (SNDL) that is available at *http://neds.daps.dla.mil/sndl.htm.*

**APPELLATE AUTHORITIES:**

Office of the Judge Advocate General (Code 14), 1322 Patterson Avenue SE., Suite 3000, Washington, Navy Yard, DC 20374–5066/

General Counsel of the Navy (FOIA), 1000 Navy Pentagon, Washington, DC 20350–1000.

**NOTIFICATION PROCEDURE:**

Individuals seeking to determine whether information about themselves is contained in this system should address written inquiries to the Freedom of Information Act coordinator, commanding officer of the activity in question, or in the case of appeals to the appropriate appellate authority. Official mailing addresses are published in the Standard Navy Distribution List (SNDL) that is available at *http://neds.daps.dla.mil/sndl.htm.*

The request should contain the full name of the individual and one or more of the following kinds of information: year request/appeal filed; serial number of response letter; and/or case file number. Requests must also be signed.

**RECORD ACCESS PROCEDURES:**

Individuals seeking access to information about themselves contained in this system commanding officer of the activity in question, or in the case of appeals to the appropriate appellate authority. Official mailing addresses are published in the Standard Navy Distribution List (SNDL) that is available at *http://neds.daps.dla.mil/sndl.htm.*

The request should contain the full name of the individual and one or more of the following kinds of information: year request/appeal filed; serial number of response letter; and/or case file number. Requests must also be signed.

**CONTESTING RECORD PROCEDURES;**

The Department of the Navy's rules for accessing records, and for contesting contents and appealing initial agency determinations are published in Secretary of the Navy Instruction 5211.5; 32 CFR part 701; or may be obtained from the system manager.

**RECORD SOURCE CATEGORIES:**

From the individual, Navy organizations, Department of Defense components, and other Federal, State, and local government agencies.

**EXEMPTIONS CLAIMED FOR THE SYSTEM:**

During the course of a FOIA action, exempt materials from other systems of records may in turn become part of the case records in this system. To the extent that copies of exempt records from those 'other' systems of records are entered into this FOIA case record, the Department of the Navy hereby claims the same exemptions for the records from those 'other' systems that are entered into this system, as claimed for the original primary systems of records which they are a part.

Department of the Navy exemption rules have been promulgated in accordance with requirements of 5 U.S.C. 553(b)(1), (2), and (3), (c) and (e) published in 32 CFR part 701, Subpart G. For additional information contact the system manager.

[FR Doc. 05–24569 Filed 12–28–05; 8:45 am]

**BILLING CODE 5001–06–M**

## ENVIRONMENTAL PROTECTION AGENCY

**[FRL–8016–3]**

## Agency Information Collection Activities OMB Responses

**AGENCY:** Environmental Protection Agency (EPA).

**ACTION:** Notice.

**SUMMARY:** This document announces the Office of Management and Budget's (OMB) responses to Agency Clearance requests, in compliance with the Paperwork Reduction Act (44 U.S.C. 3501 et seq.). An agency may not conduct or sponsor, and a person is not required to respond to, a collection of information unless it displays a currently valid OMB control number. The OMB control numbers for EPA's regulations are listed in 40 CFR part 9 and 48 CFR chapter 15.

**FOR FURTHER INFORMATION CONTACT:** Susan Auby (202) 566–1672, or email at *auby.susan@epa.gov* and please refer to the appropriate EPA Information Collection Request (ICR) Number.

**SUPPLEMENTARY INFORMATION:**

## OMB Responses to Agency Clearance Requests

*OMB Approvals*

EPA ICR No. 0982.08; NSPS for Metallic Mineral Processing Plants (Renewal); in 40 CFR part 60, subpart LL; was approved 11/04/2005; OMB Number 2060–0016; expires 11/30/2008.

EPA ICR No. 0318.10; Clean Watersheds Needs Survey (Renewal); was approved 11/08/2005; OMB Number 2040–0050; expires 11/30/2008.

EPA ICR No. 1878.02; Minimum Monitoring Requirements for Direct and Indirect Discharging Mills in the Bleached Papergrade Kraft and Soda Subcategory and the Papergrade Sulfite Subcategory of the Point Source (Renewal); in 40 CFR 430.02(a–e), 122.41(j)(2), 122.41(l)(4), 122.44(i)(2), 403.8(f), 403.12(b), (d–e), (g), 123.26(a)(e); was approved 11/14/2005; OMB Number 2040–0243; expires 11/30/2008.

EPA ICR No. 1054.09; NSPS for Petroleum Refineries (Renewal); in 40 CFR part 60, subpart J; was approved 11/14/2005; OMB Number 2060–0022; expires 11/30/2008.

EPA ICR No. 1854.04; The Consolidated Federal Air Rule for SOCMI (Renewal); in 40 CFR part 60, subparts Ka, Kb, VV, DDD, III, NNN, and RRR; 40 CFR part 61, subparts BB, Y, and V; 40 CFR part 63, subparts F, G, H, and I; 40 CFR part 65; was approved 11/15/2008; OMB Number 2060–0443; expires 11/30/2008.

EPA ICR No. 2179.03; Recordkeeping and Periodic Reporting of the Production, Import, Recycling, Transshipment and Feedstock Use of Ozone Depleting Substances (Final Rule for the Critical Use Exemption); in 40 CFR part 82, subparts A and E; Section 83.13; was approved 11/22/2005; OMB Number 2060–0564; expires 11/30/2008.

EPA ICR No. 1131.08; NSPS for Glass Manufacturing Plants; in 40 CFR part 60, subpart CC (Renewal); was approved 11/28/2005; OMB Number 2060–0054; expires 11/30/2008.

EPA ICR No. 1362.07; NESHAP for Coke Oven Batteries (Final Rule); in 40 CFR part 63, subpart L; was approved 06/30/2005; OMB Number 2060–0253; expires 12/31/2005.

EPA ICR No. 2068.02; The National Primary Drinking Water Regulations; Stage 2 Disinfectants and Disinfection Byproducts Rule (Final Rule); in 40 CFR 141.126, 40 CFR 141.630, 40 CFR 142.12–142.16; was approved 12/06/2005; OMB Number 2040–0265; expires 12/31/2008.

EPA ICR No. 0370.20; Information Collection Request for the Revision to Federal UIC Requirements for Class I Municipal Wells in Florida (Final Rule); in 40 CFR parts 144–148; was approved 12/06/2005; OMB Number 2040–0042; expires 04/30/2007.

Dated: December 14, 2005.

**Oscar Morales,**

*Director, Collection Strategies Division.*

[FR Doc. E5–8038 Filed 12–28–05; 8:45 am]

BILLING CODE 6560–50–P

---

## ENVIRONMENTAL PROTECTION AGENCY

**[EPA–HQ–OAR–2005–0172; FRL–8017–3]**

## Draft Staff Paper for Ozone; Extension of Comment Period

**AGENCY:** Environmental Protection Agency (EPA).

**ACTION:** Announcement of extension of public comment period.

**SUMMARY:** The EPA is announcing that the public comment period for this review is being extended to January 17, 2006.

**DATES:** The public comment period for this review is extended to January 17, 2006. Please refer to **SUPPLEMENTARY INFORMATION** for additional information.

**ADDRESSES:** Submit your comments identified by Docket ID No. EPA–HQ–OAR–2005–0172 by one of the following methods:

- *www.regulations.gov.* Follow the on-line instructions for submitting comments.
- E-mail: *a-and-r-Docket@epa.gov.*
- Fax: 202–564–1749.
- Mail: Air and Radiation Docket and Information Center, Environmental Protection Agency, Mailcode 6102T, 1200 Pennsylvania Ave., NW., Washington, DC 20460. Please include a total of two copies.
- Hand Delivery: Public Reading Room, Room B102, EPA West Building, 1301 Constitution Avenue, NW., Washington, DC.

Instructions: Direct your comments to Docket ID No. EPA–HQ–OAR–2005–0172. The EPA's policy is that all comments received will be included in the public docket without change and may be made available online at *www.regulations.gov*, including any personal information provided, unless the comment includes information claimed to be Confidential Business Information (CBI) or other information whose disclosure is restricted by statute. Do not submit information that you consider to be CBI or otherwise protected through *www.regulations.gov* or e-mail. The *www.regulations.gov* website is an ''anonymous access'' system, which means EPA will not know your identity or contact information unless you provide it in the body of your comment. If you send an e-mail comment directly to EPA without going through *www.regulations.gov* your e-mail address will be automatically captured and included as part of the comment that is placed in the public docket and made available on the Internet. If you submit an electronic comment, EPA recommends that you include your name and other contact information in the body of your comment and with any disk or CD–ROM you submit. If EPA cannot read your comment due to technical difficulties and cannot contact you for clarification, EPA may not be able to consider your comment. Electronic files should avoid the use of special characters, any form of encryption, and be free of any defects or viruses.

Docket: All documents in the docket are listed in the *www.regulations.gov* index. Although listed in the index, some information is not publicly available, e.g., CBI or other information whose disclosure is restricted by statute. Certain other material, such as copyrighted material, will be publicly available only in hard copy. Publicly available docket materials are available either electronically in *www.regulations.gov* or in hard copy at the Docket Center address listed above. The Public Reading Room is open from 8:30 a.m. to 4:30 p.m. Monday through Friday, excluding legal holidays. The telephone number for the Public Reading Room is 202–566–1744.

**FOR FURTHER INFORMATION CONTACT:** Any questions concerning the first draft Ozone Staff Paper and first draft related Technical Support Documents (Ozone Exposure Analysis and Risk Assessment) should be addressed to David McKee, U.S. Environmental Protection Agency, Office of Air Quality Planning and Standards, Mail Code C539–01, Research Triangle Park, NC 27711, phone number (919) 541–5288 or by e-mail at: *mckee.dave@epa.gov.*

**SUPPLEMENTARY INFORMATION:**

*Extension of public comment period.* The first draft Ozone Staff Paper and first draft related Technical Support Documents were made available on the web and notice published in the **Federal Register** on November 17, 2005 (70 FR 69761). Since the public comment period would have concluded on December 31, 2005, EPA has decided to extend the comment period until January 17, 2006, in order to avoid the December holiday period and allow interested parties to have additional time to prepare their comments.

*How Can I Get Copies of This Document and Other Related Information?*

The EPA has established the official public docket for the Rule to Review the Ozone National Ambient Air Quality Standards under Docket ID No. EPA–HQ–OAR–2005–0172.

Dated: December 21, 2005.

**Thomas C. Curran,**

*Acting Director, Office of Air Quality Planning and Standards.*

[FR Doc. 05–24608 Filed 12–28–05; 8:45 am]

**BILLING CODE 6560–50–P**

## FEDERAL COMMUNICATIONS COMMISSION

### Public Information Collection(s) Approved by Office of Management and Budget

December 7, 2005.

**SUMMARY:** The Federal Communications Commission (FCC) has received Office of Management and Budget (OMB) approval for the following public information collections pursuant to the Paperwork Reduction Act of 1995, Pub. L. 104–13. An agency may not conduct or sponsor and a person is not required to respond to a collection of information unless it displays a currently valid control number.

**DATES:** The revision to § 101.1523(b) published at 70 FR 29985, May 25, 2005, became effective on December 7, 2005.

**FOR FURTHER INFORMATION CONTACT:** Judith B. Herman at (202) 418–0214 or via the Internet at *Judith-B.Herman@fcc.gov.*

**SUPPLEMENTARY INFORMATION:**

*OMB Control No.:* 3060–1070.

*OMB Approval Date:* December 7, 2005.

*Expiration Date:* 12/31/08.

*Title:* Allocations and Service Rules for the 71–76 GHz, 81–86 GHz, and 92–95 GHz Bands—WT Docket No. 02–146; FCC 05–45.

*Form No.:* N/A.

*Number of Responses:* 1,000 responses.

*Estimated Time Per Response:* 1.5–3.5 hours.

*Total Annual Burden:* 12,000 hours.

*Total Annual Cost:* $1,830,000.

*Needs and Uses:* The Commission adopted a *Memorandum Opinion and Order*, WT Docket No. 02–146, FCC 05–45, which revises the rules to require licensees, as part of the link registration process, to submit to the Database Manager (DM) an analysis under the interference protection criteria for the 70–80 GHz bands that demonstrates that the proposed link will neither cause nor receive harmful interference relative to previously registered non-government links. This requirement will apply to link registrations (new or modified) that are first submitted to a database manager on or after the effective date of this new requirement. The database managers will accept all interference analyses submitted during the link registration process and retain them electronically for subsequent review by the public. It is important for the ''first-in-time'' determination, and for adjudicating complaints filed with the Commission, that the interference analysis captures the exact snapshot in time (*i.e.*, conditions at the time-of-link-registration) that will be dispositive in a dispute. Without the benefit of an interference analysis on file, it would be much more difficult for registrants to recreate conditions accurately after the fact.

Federal Communications Commission.

**William F. Caton,**

*Deputy Secretary.*

[FR Doc. 05–24622 Filed 12–28–05; 8:45 am]

**BILLING CODE 6712–01–P**

## FEDERAL COMMUNICATIONS COMMISSION

**[CC Docket No. 92–237; DA 05–3172]**

### Next Meeting of The North American Numbering Council

**AGENCY:** Federal Communications Commission.

**ACTION:** Notice.

**SUMMARY:** On December 21, 2005, the Commission released a public notice announcing the January 24, 2006 meeting and agenda of the North American Numbering Council (NANC). The intended effect of this action is to make the public aware of the NANC's next meeting and agenda.

**DATES:** Tuesday, January 24, 2006, 9:30 a.m.

**ADDRESSES:** Telecommunications Access Policy Division, Wireline Competition Bureau, Federal Communications Commission, Portals II, 445 Twelfth Street, SW., Suite 5–A420, Washington, DC 20554. Requests to make an oral statement or provide written comments to the NANC should be sent to Deborah Blue.

**FOR FURTHER INFORMATION CONTACT:** Deborah Blue, Special Assistant to the Designated Federal Officer (DFO) at (202) 418–1466 or *Deborah.Blue@fcc.gov.* The fax number is: (202) 418–2345. The TTY number is: (202) 418–0484.

**SUPPLEMENTARY INFORMATION:** Released: December 21, 2005.

The North American Numbering Council (NANC) has scheduled a meeting to be held Tuesday, January 24, 2006, from 9:30 a.m. until 5 p.m. The meeting will be held at the Federal Communications Commission, Portals II, 445 Twelfth Street, SW., Room TW–C305, Washington, DC. This meeting is open to members of the general public. The FCC will attempt to accommodate as many participants as possible. The public may submit written statements to the NANC, which must be received two business days before the meeting. In addition, oral statements at the meeting by parties or entities not represented on the NANC will be permitted to the extent time permits. Such statements will be limited to five minutes in length by any one party or entity, and requests to make an oral statement must be received two business days before the meeting.

Reasonable accommodations for people with disabilities are available upon request. Include a description of the accommodation you will need including as much detail as you can. Also include a way we can contact you if we need more information. Please allow at least 5 days advance notice; last minute requests will be accepted, but may be impossible to fill. Send an e-mail to *fcc504@fcc.gov* or call the Consumer & Governmental Affairs Bureau at 202–418–0530 (voice), 202–418–0432 (tty).

**Proposed Agenda—Tuesday, January 24, 2006, 9:30 a.m.:***

1. Announcements and Recent News
2. Approval of Minutes—Meeting of November 30, 2005
3. Report of the North American Numbering Plan Administrator (NANPA)
4. Report of the National Thousands Block Pooling Administrator (PA)
5. Report of the North American Portability Management (NAPM) LLC
6. Status of the Industry Numbering Committee (INC) activities
7. Report of the North American Numbering Plan Billing and Collection (NANP B&C) Agent
8. Report of the Billing & Collection Working Group (B&C WG)
9. Reports from the Issues Management Groups (IMGs)—NANC Operating Manual IMG
10. Report of the Local Number Portability Administration (LNPA) Working Group

* The Agenda may be modified at the discretion of the NANC Chairman with the approval of the DFO.

11. Report of the Numbering Oversight Working Group (NOWG)
12. Report of the Future of Numbering Working Group (FoN WG)
    - Including report of pANI IMG
13. Special Presentations
    - Report by Karen Strauss: A Uniform Numbering Scheme for VRS Users
    - Report by Karen Mulberry: Update on Developments at ITU SG–2
14. Update List of the NANC Accomplishments
15. Summary of Action Items
16. Public Comments and Participation (5 minutes per speaker)
17. Other Business

Adjourn no later than 5 p.m.

*Next Meeting: Tuesday, March 14, 2006*

Federal Communications Commission.

**Marilyn Jones,**

*Attorney, Telecommunications Access Policy Division, Wireline Competition Bureau.*

[FR Doc. E5–8048 Filed 12–28–05; 8:45 am]

BILLING CODE 6712–01–P

## FEDERAL DEPOSIT INSURANCE CORPORATION

### Agency Information Collection Activities: Proposed Collection Renewals (0097; 0134; 0135); Comment Request

**AGENCY:** Federal Deposit Insurance Corporation (FDIC).

**ACTION:** Notice and request for comment.

**SUMMARY:** The FDIC, as part of its continuing effort to reduce paperwork and respondent burden, invites the general public and other Federal agencies to take this opportunity to comment on proposed and/or continuing information collections, as required by the Paperwork Reduction Act of 1995 (44 U.S.C. chapter 35). Currently, the FDIC is soliciting comments concerning the following continuing collections of information titled: (1) Interagency Notice of Change in Director or Executive Officer (3064–0097); (2) Customer Assistance (3064–0134); and (3) Asset Purchaser Eligibility Certification (3064–0135).

**DATES:** Comments must be submitted on or before February 27, 2006.

**ADDRESSES:** Interested parties are invited to submit written comments by any of the following methods. All comments should refer to the name and number of the collection:

- *http://www.FDIC.gov/regulations/laws/federal/propose.html.*
- *E-mail: comments@fdic.gov.* Include the name and number of the collection in the subject line of the message.
- *Mail:* Gary A. Kuiper (202.942.3824), Counsel, Federal Deposit Insurance Corporation, 550 17th Street, NW., (PA1730–3000), Washington, DC 20429.
- *Hand Delivery:* Comments may be hand-delivered to the guard station at the rear of the 550 17th Street Building (located on F Street), on business days between 7 a.m. and 5 p.m.

A copy of the comments may also be submitted to the OMB desk officer for the FDIC: Mark Menchik, Office of Information and Regulatory Affairs, Office of Management and Budget, New Executive Office Building, Room 3208, Washington, DC 20503.

**FOR FURTHER INFORMATION CONTACT:** Gary A. Kuiper, at the address identified above.

**SUPPLEMENTARY INFORMATION:**

### Proposal to Renew the Following Currently Approved Collections of Information

1. *Title:* Interagency Notice of Change in Director or Executive.
*OMB Number:* 3064–0097.
*Frequency of Response:* On occasion.
*Affected Public:* Business or other financial institutions.
*Estimated Number of Respondents:* 200.
*Estimated Time per Response:* 2 hours.
*Total Annual Burden:* 400 hours.
*General Description of Collection:* This notice is used by a depository institution or its holding company to notify the appropriate regulatory agency of a proposed change in the board of directors or senior executive officer of such institution or holding company.

2. *Title:* Customer Assistance.
*OMB Number:* 3064–0134.
*Form Number:* FDIC 6422/04.
*Frequency of Response:* On occasion.
*Affected Public:* Business or other financial institutions.
*Estimated Number of Respondents:* 5000.
*Estimated Time per Response:* 0.5 hours.
*Total Annual Burden:* 2500 hours.
*General Description of Collection:* This collection permits the FDIC to collect information from customers of financial institutions who have inquiries or complaints about service. Customers may document their complaints or inquiries to the FDIC using a letter or an optional form (6422/04).

3. *Title:* Asset Purchaser Eligibility Certification.
*OMB Number:* 3064–0135.
*Form Number:* FDIC 7300/06.
*Frequency of Response:* On occasion.
*Affected Public:* Business or other financial institutions.
*Estimated Number of Respondents:* 2500.
*Estimated Time per Response:* 0.5 hours.
*Total Annual Burden:* 1250 hours.
*General Description of Collection:* The FDIC will use the Asset Purchaser Eligibility Certification to assure compliance with statutory restrictions on who may purchase assets held by the FDIC.

### Request for Comment

Comments are invited on: (a) Whether the collection of information is necessary for the proper performance of the FDIC's functions, including whether the information has practical utility; (b) the accuracy of the estimates of the burden of the information collection, including the validity of the methodology and assumptions used; (c) ways to enhance the quality, utility, and clarity of the information to be collected; and (d) ways to minimize the burden of the information collection on respondents, including through the use of automated collection techniques or other forms of information technology.

At the end of the comment period, the comments and recommendations received will be analyzed to determine the extent to which the collection should be modified prior to submission to OMB for review and approval. Comments submitted in response to this notice also will be summarized or included in the FDIC's requests to OMB for renewal of these collections. All comments will become a matter of public record.

Dated at Washington, DC, this 22nd day of December, 2005.

Federal Deposit Insurance Corporation.

**Robert E. Feldman,**

*Executive Secretary.*

[FR Doc. E5–8002 Filed 12–28–05; 8:45 am]

BILLING CODE 6714–01–P

## FEDERAL MARITIME COMMISSION

### Notice of Agreement Filed

The Commission hereby gives notice of the filing of the following agreement under the Shipping Act of 1984. Interested parties may submit comments on an agreement to the Secretary, Federal Maritime Commission, Washington, DC 20573, within ten days of the date this notice appears in the **Federal Register.** Copies of agreements are available through the Commission's Office of Agreements (202–523–5793 or *tradeanalysis@fmc.gov*).

*Agreement No.:* 011346–015.
*Title:* Israel Trade Conference Agreement.
*Parties:* A.P. Moller-Maersk A/S; Farrell Lines, Inc.; P&O Nedlloyd Limited; and Zim Integrated Shipping Services, Ltd.
*Filing Party:* Wayne R. Rohde, Esq.; Sher & Blackwell; 1850 M Street, NW., Suite 900, Washington, DC 20036.
*Synopsis:* The agreement adds A.P. Moller-Maersk A/S as a party to the agreement.

By Order of the Federal Maritime Commission.

Dated: December 23, 2005.

**Bryant L. VanBrakle,**

*Secretary.*

[FR Doc. E5–8007 Filed 12–28–05; 8:45 am]

BILLING CODE 6730–01–P

## FEDERAL MARITIME COMMISSION

### Ocean Transportation Intermediary License Revocations

The Federal Maritime Commission hereby gives notice that the following Ocean Transportation Intermediary licenses have been revoked pursuant to section 19 of the Shipping Act of 1984 (46 U.S.C. app. 1718) and the regulations of the Commission pertaining to the licensing of Ocean Transportation Intermediaries, effective on the corresponding date shown below:

*License Number:* 015154N.
*Name:* Attila Cargo Express, Inc.
*Address:* 112 Starlite Street, So. San Francisco, CA 94080.
*Date Revoked:* November 6, 2005.
*Reason:* Failed to maintain a valid bond.

*License Number:* 002238F.
*Name:* CSI Cargo System Air and Sea Inc.
*Address:* 150–40 183rd Street, Suite 106, Jamaica, NY 11413.
*Date Revoked:* November 23, 2005.
*Reason:* Failed to maintain a valid bond.

*License Number:* 019165N.
*Name:* Cody Cargo Corp. dba Armada International Logistics.
*Address:* 632 Centre Drive, Lincolnton, NC 28092.
*Date Revoked:* November 30, 2005.
*Reason:* Surrendered license voluntarily.

*License Number:* 000571F.
*Name:* Forwarding Services, Inc.
*Address:* 811 Washington Road, Parlin, NJ 08859.
*Date Revoked:* November 6, 2005.
*Reason:* Failed to maintain a valid bond.

*License Number:* 004128N.
*Name:* International Logistics, Inc.
*Address:* 9902 S. 148th Street, Omaha, NE 68138.
*Date Revoked:* November 22, 2005.
*Reason:* Surrendered license voluntarily.

*License Number:* 003763F.
*Name:* Mayda Beatriz Sabloon dba Ameripack Freight Systems.
*Address:* 7301 NW 41st Street, Miami, FL 33166.
*Date Revoked:* Decmber 4, 2005.
*Reason:* Failed to maintain a valid bond.

*License Number:* 019184N.
*Name:* Seaboard Solutions, Inc.
*Address:* 8001 NW 79th Street, Miami, FL 33166.
*Date Revoked:* November 18, 2005.
*Reason:* Surrendered license voluntarily.

*License Number:* 016532F.
*Name:* Seven Seas Shipping, Inc.
*Address:* 767 Citrus Cove Drive, Winter Garden, FL 34787.
*Date Revoked:* November 30, 2005.
*Reason:* Failed to maintain a valid bond.

*License Number:* 017081F.
*Name:* Speedex International, Inc.
*Address:* 2665 E. Del Amo Blvd., Rancho Dominguez, CA 90221.
*Date Revoked:* November 30, 2005.
*Reason:* Failed to maintain a valid bond.

**Sandra L. Kusumoto,**

*Director, Bureau of Certification and Licensing.*

[FR Doc. E5–8008 Filed 12–28–05; 8:45 am]

BILLING CODE 6730–01–P

## FEDERAL MARITIME COMMISSION

### Ocean Transportation Intermediary License Reissuances

Notice is hereby given that the following Ocean Transportation Intermediary licenses have been reissued by the Federal Maritime Commission pursuant to section 19 of the Shipping Act of 1984, as amended by the Ocean Shipping Reform Act of 1998 (46 U.S.C. app. 1718) and the regulations of the Commission pertaining to the licensing of Ocean Transportation Intermediaries, 46 CFR part 515.

| License No. | Name/address | Date reissued |
|---|---|---|
| 000016F | Major Forwarding Company, Inc., 159–15 Rockaway Blvd., Jamaica, NY 11434 | November 6, 2005. |
| 019184F | Seaboard Solutions, Inc., 8001 N.W. 79th Street, Miami, FL 33166 | November 18, 2005. |
| 016535F | World Trans Logistic Inc., dba World Air Logistic Co., 841 E. Sandhill Avenue, Carson, CA 90746. | November 6, 2005. |
| 004128F | International Logistics, Inc., 9902 S. 148th Street, Omaha, NE 68138 | November 22, 2005. |

**Sandra L. Kusumoto,**

*Director, Bureau of Certification and Licensing.*

[FR Doc. E5–8010 Filed 12–28–05; 8:45 am]

BILLING CODE 6730–01–P

## FEDERAL MARITIME COMMISSION

### Ocean Transportation Intermediary License Applicants

Notice is hereby given that the following applicants have filed with the Federal Maritime Commission an application for license as a Non-Vessel-Operating Common Carrier and Ocean Freight Forwarder—Ocean Transportation Intermediary pursuant to section 19 of the Shipping Act of 1984 as amended (46 U.S.C. app. 1718 and 46 CFR part 515).

Persons knowing of any reason why the following applicants should not receive a license are requested to contact the Office of Transportation Intermediaries, Federal Maritime Commission, Washington, DC 20573.

Non-Vessel-Operating Common Carrier Ocean Transportation Intermediary Applicants

P.O.L. International Inc., 8610 Airport Blvd., 2nd Floor, #8, Los Angeles, CA 90045, Officers: Steven C. Chow, Vice President (Qualifying Individual), Tiffany Xue Leung, President.

Speedy Freight Services, 33442 Western Avenue, Union City, CA 94587, Officer: Mike Chiali Chu, CEO (Qualifying Individual).

Non-Vessel-Operating Common Carrier and Ocean Freight Forwarder Transportation Intermediary Applicant

Air Ocean International Forwarders, Inc., 1601 NW 82nd Avenue,

Miami, FL 33126, Officers: Rossin V. Garcia, Vice President (Qualifying Individual), Manuel Garcia, President.

Dated: December 23, 2005.

**Bryant L. VanBrakle,**

*Secretary.*

[FR Doc. E5–8009 Filed 12–28–05; 8:45 am]

BILLING CODE 6730–01–P

## GENERAL SERVICES ADMINISTRATION

**[OMB Control No. 3090–XXXX]**

### National Capital Region (NCR), Office of Childcare Services; Information Collection; General Services Administration (GSA) Child Care Specialist Feedback Form

**AGENCY:** NCR Office of Childcare Services, Public Buildings Service (PBS), GSA.

**ACTION:** Notice of request for comments regarding a request for a new OMB clearance.

**SUMMARY:** Under the provisions of the Paperwork Reduction Act of 1995 (44 U.S.C. Chapter 35), the General Services Administration has submitted to the Office of Management and Budget (OMB) a request to review and approve a new information collection requirement. This information will be used to assess satisfaction with services delivered by staff from the Office of Child Care Services. The respondents are current users of the Office of Child Care Services. A request for public comments was published at 70 FR 56167, September 26, 2005. No comments were received.

Public comments are particularly invited on: Whether this collection of information is necessary and whether it will have practical utility; whether our estimate of the public burden of this collection of information is accurate and based on valid assumptions and methodology; and ways to enhance the quality, utility, and clarity of the information to be collected.

**DATES:** Submit comments on or before: January 30, 2006.

**FOR FURTHER INFORMATION CONTACT:** Leo G. Bonner, Regional Child Care Coordinator, Office of Child Care Services, at telephone (202) 401–7403 or via e-mail to *leo.bonner@gsa.gov*.

**ADDRESSES:** Submit comments regarding this burden estimate or any other aspect of this collection of information, including suggestions for reducing this burden to Ms. Jeanette Thornton, GSA Desk Officer, OMB, Room 10236, NEOB, Washington, DC 20503, and a copy to the Regulatory Secretariat (VIR), General Services Administration, Room 4035, 1800 F Street, NW., Washington, DC 20405. Please cite OMB Control No. 3090–XXXX, General Services Administration (GSA) Child Care Specialist Feedback Form, in all correspondence.

**SUPPLEMENTARY INFORMATION:**

**A. Purpose**

This information will be used to assess consumer satisfaction with services delivered by staff from the Office of Child Care services.

**B. Annual Reporting Burden**

*Respondents: 144.*

*Responses Per Respondent:* 1.

*Hours Per Response:* .083 (5 minutes).

T*otal Burden Hours:* 12.

*Obtaining Copies of Proposals:* Requesters may obtain a copy of the information collection documents from the General Services Administration, Regulatory Secretariat (VIR), 1800 F Street, NW., Room 4035, Washington, DC 20405, telephone (202) 208–7312. Please cite OMB Control No. 3090–XXXX, General Services Administration (GSA) Child Care Specialist Feedback Form, in all correspondence.

Dated: November 30, 2005

**Michael W. Carleton,**

*Chief Information Officer.*

[FR Doc. E5–8001 Filed 12–28–05; 8:45 am]

BILLING CODE 6820–A4–S

## DEPARTMENT OF HEALTH AND HUMAN SERVICES

### Centers for Medicare & Medicaid Services

### Statement of Organization, Functions, and Delegations of Authority

Part F of the Statement of Organization, Functions, and Delegations of Authority for the Department of Health and Human Services, Centers for Medicare & Medicaid Services (CMS), (**Federal Register**, Vol. 62, No. 85, pp. 24120–24126, dated Friday, May 2, 1997, as amended thereafter) is being republished to reflect the current organizational structure of CMS in relation to meeting the Department's goal of having no more than four management levels in the Agency and to also exercise leadership in implementing the Medicare Prescription Drug, Improvement, and Modernization Act of 2003 (MMA).

Part F is described below:

- Section F.10. (Organization) reads as follows:

1. Office of External Affairs (FAC)
2. Center for Beneficiary Choices (FAE)
3. Office of Legislation (FAF)
4. Center for Medicare Management (FAH)
5. Office of Equal Opportunity and Civil Rights (FAJ)
6. Office of Research, Development, and Information (FAK)
7. Office of Clinical Standards and Quality (FAM)
8. Office of the Actuary (FAN)
9. Center for Medicaid and State Operations (FAS)
10. Office of the Boston Regional Administrator (FAU1)
11. Office of the New York Regional Administrator (FAU2)
12. Office of the Philadelphia Regional Administrator (FAU3)
13. Office of the Atlanta Regional Administrator (FAV4)
14. Office of the Chicago Regional Administrator (FAW5)
15. Office of the Dallas Regional Administrator (FAV6)
16. Office of the Kansas City Regional Administrator (FAW7)
17. Office of the Denver Regional Administrator (FAX8)
18. Office of the San Francisco Regional Administrator (FAX9)
19. Office of the Seattle Regional Administrator (FAXX)
20. Office of Operations Management (FAY)
21. Office of Information Services (FBB)
22. Office of Financial Management (FBC)
23. Office of Strategic Operations and Regulatory Affairs (FGA)
24. Office of E-Health Standards and Services (FHA)
25. Office of Acquisition and Grants Management (FKA)
26. Office of Policy (FLA)

- Section F. 20. (Functions) reads as follows:

**1. Office of External Affairs (FAC)**

- Serves as the focal point for the Agency to the news media and provides leadership for the Agency in the area of intergovernmental affairs. Advises the Administrator and other Agency components in all activities related to the media and on matters that affect other units and levels of government.
- Coordinates CMS activities with the Office of the Assistant Secretary for Public Affairs and the Secretary's intergovernmental affairs officials.
- Serves as senior counsel to the Administrator in all activities related to the media. Provides consultation, advice, and training to the Agency's

senior staff with respect to relations with the news media.

• Develops and executes strategies to further the Agency's relationship and dealings with the media. Maintains a broad based knowledge of the Agency's structure, responsibilities, mission, goals, programs, and initiatives in order to provide or arrange for rapid and accurate response to news media needs.

• Prepares and edits appropriate materials about the Agency, its policies, actions and findings, and provides them to the public through the print and broadcast media. Develops and directs media relations strategies for the Agency.

• Responds to inquiries from a broad variety of news media, including major newspapers, national television and radio networks, national news magazines, local newspapers and radio and television stations, publications directed toward the Agency's beneficiary populations, and newsletters serving the health care industry.

• Manages press inquiries, coordinates sensitive press issues, and develops policies and procedures for how press and media inquiries are handled.

• Arranges formal interviews for journalists with the Agency's Administrator or other appropriate senior Agency staff; identifies for interviewees the issues to be addressed, and prepares or obtains background materials as needed.

• For significant Agency initiatives, issues media advisories and arranges press conferences as appropriate; coordinates material and personnel as necessary.

• Serves as liaison with the Department of Health and Human Services and White House press offices.

**2. Center for Beneficiary Choices (FAE)**

• Serves as Medicare Beneficiary Ombudsman, as well as the focal point for all Agency interactions with beneficiaries, their families, care givers, health care providers, and others operating on their behalf concerning improving beneficiary's ability to make informed decisions about their health and about program benefits administered by the Agency. These activities include strategic and implementation planning, execution, assessment and communications.

• Assesses beneficiary and other consumer needs, develops and oversees activities targeted to meet these needs, and documents and disseminates results of these activities. These activities focus on Agency beneficiary service goals and objectives and include: Development of baseline and ongoing monitoring information concerning populations affected by Agency programs; development of performance measures and assessment programs; design and implementation of beneficiary services initiatives; development of communications channels and feedback mechanisms within the Agency and between the Agency and its beneficiaries and their representatives; and close collaboration with other Federal and State agencies and other stakeholders with a shared interest in better serving our beneficiaries.

• Develops national policy for all Medicare Parts A, B, C and D beneficiary eligibility, enrollment, entitlement; premium billing and collection; coordination of benefits; rights and protections; dispute resolution process; as well as policy for managed care enrollment and disenrollment to assure the effective administration of the Medicare program, including the development of related legislative proposals.

• Oversees the development of privacy and confidentiality policies pertaining to the collection, use, and release of individually identifiable data.

• Coordinates beneficiary-centered information, education, and service initiatives.

• Develops and tests new and innovative methods to improve beneficiary aspects of health care delivery systems through Title XVIII, XIX, and XXI demonstrations and other creative approaches to meeting the needs of Agency beneficiaries.

• Assures, in coordination with other Centers and Offices, the activities of Medicare contractors, including managed care plans, agents, and State Agencies, meet the Agency's requirements on matters concerning beneficiaries and other consumers.

• Plans and administers the contracts and grants related to beneficiary and customer service, including the State Health Insurance Assistance Program grants.

• Formulates strategies to advance overall beneficiary communications goals and coordinates the design and publication process for all beneficiary-centered information, education, and service initiatives.

• Builds a range of partnerships with other national organizations for effective consumer outreach, awareness, and education efforts in support of Agency programs.

• Serves as the focal point for all Agency interactions with managed health care organizations for issues relating to Agency programs, policy and operations.

• Develops national policies and procedures related to the development, qualification and compliance of health maintenance organizations, competitive medical plans and other health care delivery systems and purchasing arrangements (such as prospective pay, case management, differential payment, selective contracting, etc.) necessary to assure the effective administration of the Agency's programs, including the development of statutory proposals.

• Handles all phases of contracts with managed health care organizations eligible to provide care to Medicare beneficiaries.

• Coordinates the administration of individual benefits to assure appropriate focus on long term care, where applicable, and assumes responsibility for the operational efforts related to the payment aspects of long term care and post-acute care services.

• Serves as the focal point for all Agency interactions with employers, employees, retirees and others operating on their behalf pertaining to issues related to Agency policies and operations concerning employer sponsored prescription drug coverage for retirees.

• Develops national policies and procedures to support and assure appropriate State implementation of the rules and processes governing group and individual health insurance markets and the sale of health insurance policies that supplement Medicare coverage.

• Primarily responsible for all operations related to Medicare Prescription Drug Plans and Medicare Advantage Prescription Drug (Part D) plans.

• Performs activities related to the Medicare Parts A & B processes (42 CFR part 405, subparts G and H), Part C (42 CFR part 422, subpart M), Part D (42 CFR part 423, subpart M) and the PACE program for claims-related hearings, appeals, grievances and other dispute resolution processes that are beneficiary-centered.

• Develops, evaluates, and reviews regulations, guidelines, and instructions required for the dissemination of appeals policies to Medicare beneficiaries, Medicare contractors, Medicare Advantage plans, Prescription Drug Plans, CMS regional offices, beneficiary advocacy groups and other interested parties.

**3. Office of Legislation (FAF)**

• Provides leadership and executive direction within the Agency for legislative planning to address the Administration's agenda.

• Tracks, evaluates and develops provisions of annual legislative

proposals for Medicare, Medicaid, Clinical Laboratory Improvement Act, Health Insurance Portability and Accountability Act and related statutes affecting health care financing quality and access in concert with HCFA components, the Department and the Office of Management and Budget.

• Advances the legislative policy process through analysis, review and development of health care initiatives and issues.

• Develops the long-range legislative plans for the Agency in collaboration with the CMS Centers and Offices.

• Participates with other CMS components in the development of Agency policy, including implementing regulations and administrative actions.

• Manages pro-actively the Agency's response in times of heightened congressional oversight of CMS in collaboration with the Centers and Offices. Manages, coordinates and develops policies for responding to congressional inquiries.

• Coordinates activities with the Office of the Assistant Secretary for Legislation (ASL) and serves as the ASLs principal contact point on legislative and congressional relations.

• In collaboration with CMS Centers and Offices, provides technical assistance, consultation and information services to congressional committees and individual members of Congress on the Medicare and Medicaid programs, new CMS initiatives and pertinent legislation.

• In collaboration with the CMS Centers and Offices, provides technical, analytical, advisory and information services to the Agency's components, the Department, the White House, OMB, other government agencies, private organizations and the general public on Agency legislation.

• Tracks and reports on legislation relating to CMS programs and maintains legislative reference library.

• Coordinates the Agency's participation in congressional hearings, including preparation of testimony and briefing materials, and covers all other congressional hearings on matters of interest to the Agency except Appropriations Committee hearings specifically on the appropriation budget.

**4. Center for Medicare Management (FAH)**

• Serves as the focal point for all Agency interactions with health care providers, intermediaries and carriers for issues relating to Agency fee-for-service policies and operations.

• Monitors providers' and other entities' conformance with quality standards (other than those directly related to survey and certification); policies related to scope of benefits; and other statutory, regulatory, and contractual provisions.

• Based on program data, develops payment mechanisms, administrative mechanisms, and regulations to ensure that CMS is purchasing medically necessary services under fee-for-service.

• Writes payment and benefit-related instructions for Medicare contractors.

• Defines the scope of Medicare benefits and develops national fee-for-service payment policies, as necessary, to assure the effective administration of the Agency's programs, including the development of related statutory proposals.

• Develops Agency medical coding policies related to fee-for-service payments.

• Provides administrative support to the Practicing Physician Advisory Council.

• Coordinates provider, physician and contractor centered information, education, and service initiatives.

• Serves as the CMS lead for Medicare carrier and fiscal intermediary management, oversight, budget, and performance issues.

• Functions as CMS liaison for all Medicare carrier and fiscal intermediary program issues and, in close collaboration with the regional offices and other CMS components, coordinates the agency-wide contractor activities.

• Manages contractor instructions, workload, and change management process.

• Collaborates with other CMS components to establish ongoing performance expectations for Medicare contractors (carriers and fiscal intermediaries) consistent with the agency's goals; interprets, evaluates, and provides information on Medicare contractors in terms of ongoing compliance with performance requirements and expectations; evaluates compliance with issued instructions; evaluates contractor-specific performance and/or integrity issues; and evaluates/monitors corrective action, if necessary.

• Manages, monitors, and provides oversight of contractor (carriers and fiscal intermediaries) transition activities including replacement of departing contractors and the resulting transfer of workload, functional realignments, and geographic workload carveouts.

• Maintains and provides accurate contractor specific information. Develops and implements long-term fee-for-service contractor strategy, tactical plans, and other planning documents.

• Serves as lead on current/proposed legislation in order to determine impact on provider and contractor operations.

• Develops national policy and implementation of all Medicare Part A, Part B, and Part C premium billing and collection activities and coordination of benefits to assure effective administration of fee-for-service aspects of the Medicare program.

**5. Office of Equal Opportunity & Civil Rights (FAJ)**

• Provides agency-wide leadership and advice on issues of diversity, civil rights, and promotion of a supportive work environment for Agency employees.

• Develops, implements and manages affirmative employment programs. Provides principal advisory, advocacy, and liaison services for the Administrator to Agency leadership and employees concerning equality in employment related issues to ensure a diverse workforce.

• Develops Equal Employment Opportunity (EEO) and civil rights compliance policy for the Agency. Assesses the Agency's compliance with applicable civil rights statutes, executive orders, regulations, policies, and programs.

• Identifies policy and operational issues and proposes solutions for resolving these issues in partnership with management, Office of the General Counsel, and other organizational entities.

• Receives and evaluates complaints for procedural sufficiency; investigates, adjudicates and resolves such complaints.

• Promotes the representation of minority groups, women, and individuals with disabilities through community outreach and other activities.

• Resolves informal discrimination complaints by means of EEO counseling and/or Alternative Dispute Resolution.

• Develops and analyzes data for internal and external reports reflecting the diversity of the Agency workforce and fairness in employment related actions. Makes recommendations to management on changes needed to ensure equal employment opportunity in every respect.

• Serves as the internal advocate for civil rights and related principles. Provides training, seminars, and technical guidance to Agency staff.

**6. Office of Research, Development & Information (FAK)**

• Provides analytic support and information to the Administrator and

the Executive Council needed to establish Agency goals and directions.

• Performs environmental scanning, identifying, evaluating, and reporting emerging trends in health care delivery and financing and their interactions with Agency programs.

• Manages strategic, crosscutting initiatives.

• Designs and conducts research and evaluations of health care programs, studying their impacts on beneficiaries, providers, plans, States and other partners and customers, designing and assessing potential improvements, and developing new measurement tools.

• Coordinates all Agency demonstration activities, including development of the research and demonstration annual plan, evaluation of all Agency demonstrations, and assistance to other components in the design of demonstrations and studies.

• Manages assigned demonstrations, including Federal review, approval, and oversight; coordinates and participates with departmental components in experimental health care delivery projects.

• Develops research, demonstration, and other publications and papers related to health care issues.

• Designs and conducts payment, purchasing, and benefits demonstrations.

**7. Office of Clinical Standards & Quality (FAM)**

• Serves as the focal point for all quality, clinical and medical science issues and policies for the Agency's programs. Provides leadership and coordination for the development and implementation of a cohesive, agency-wide approach to measuring and promoting quality and leads the Agency's priority-setting process for clinical quality improvement. Coordinates quality-related activities with outside organizations. Monitors quality of Medicare, Medicaid, and CLIA. Evaluates the success of interventions.

• Identifies and develops best practices and techniques in quality improvement; implementation of these techniques will be overseen by appropriate components. Develops and collaborates on demonstration projects to test and promote quality measurement and improvement.

• Develops, tests and evaluates, adopts and supports performance measurement systems (quality indicators) to evaluate care provided to CMS beneficiaries except for demonstration projects residing in other components.

• Assures that the Agency's quality-related activities (survey and certification, technical assistance, beneficiary information, payment policies and provider/plan incentives) are fully and effectively integrated. Carries out the Health Care Quality Improvement Program (HCQIP) for the Medicare, Medicaid, and CLIA programs.

• Leads in the specification and operational refinement of an integrated CMS quality information system, which includes tools for measuring the coordination of care between health care settings; analyzes data supplied by that system to identify opportunities to improve care and assess success of improvement interventions.

• Develops requirements of participation for providers and plans in the Medicare, Medicaid, and CLIA programs. Revises requirements based on statutory change and input from other components.

• Operates the Medicare Peer Review Organization and End Stage Renal Disease Network program in conjunction with regional offices, providing policies and procedures, contract design, program coordination, and leadership in selected projects.

• Identifies, prioritizes and develops content for clinical and health related aspects of CMS' Consumer Information Strategy; collaborates with other components to develop comparative provider and plan performance information for consumer choices.

• Prepares the scientific, clinical, and procedural basis for and recommends to the Administrator decisions regarding coverage of new and established technologies and services. Coordinates activities of the Agency's Technology Advisory Committee and maintains liaison with other departmental components regarding the safety and effectiveness of technologies and services; prepares the scientific and clinical basis for, and recommends approaches to, quality-related medical review activities of carriers and payment policies.

**8. Office of the Actuary (FAN)**

• Conducts and directs the actuarial program for CMS and directs the development of and methodologies for macroeconomic analysis of health care financing issues.

• Performs actuarial, economic and demographic studies to estimate CMS program expenditures under current law and under proposed modifications to current law.

• Provides program estimates for use in the President's budget and for reports required by Congress.

• Studies questions concerned with financing present and future health programs, evaluates operations of the Federal Hospital Insurance Trust Fund and Supplementary Medical Insurance Trust Fund and performs microanalyses for the purpose of assessing the impact of various health care financing factors upon the costs of Federal programs.

• Estimates the financial effects of proposals to create national health insurance systems or other national or incremental health insurance reform.

• Develops and conducts studies to estimate and project national and area health expenditures.

• Develops, maintains, and updates provider market basket input price indexes and the Medicare Economic Index.

• Analyzes data on physicians' costs and charges to develop payment indices and monitors expansion of service and inflation of costs in the health care sector.

• Performs actuarial reviews and audits of employee benefit expenses charged to Medicare by fiscal intermediaries and carriers.

• Publishes cost projections and economic analyses, and provides actuarial, technical advice and consultation to CMS components, governmental components, Congress, and outside organizations.

**9. Center for Medicaid and State Operations (FAS)**

• Serves as the focal point for all Centers for Medicare & Medicaid Services activities relating to Medicaid, the State Children's Health Insurance Program, the Clinical Laboratory Improvement Act, the survey and certification of health facilities and all interactions with States and local governments (including the Territories).

• Develops national Medicaid policies and procedures which support and assure effective State program administration and beneficiary protection. In partnership with States, evaluates the success of State agencies in carrying out their responsibilities and, as necessary, assists States in correcting problems and improving the quality of their operations.

• Develops, interprets, and applies specific laws, regulations, and policies that directly govern the financial operation and management of the Medicaid program and the related interactions with States and regional offices.

• In coordination with other components, develops, implements, evaluates and refines standardized provider performance measures used within provider certification programs.

Supports States in their use of standardized measures for provider feedback and quality improvement activities. Develops, implements and supports the data collection and analysis systems needed by States to administer the certification program.

• Reviews, approves and conducts oversight of Medicaid managed care waiver programs. Provides assistance to States and external customers on all Medicaid managed care issues.

• Develops national policies and procedures on Medicaid automated claims/encounter processing and information retrieval systems such as the Medicaid Management Information System (MMIS) and integrated eligibility determination systems.

• In coordination with the Office of Financial Management (OFM), directs, coordinates, and monitors program integrity efforts and activities by States and regions. Works with OFM to provide input in the development of program integrity policy.

• Through administration of the home and community-based services program and policy collaboration with other Agency components and the States, promotes the appropriate choice and continuity of quality services available to frail elderly, disabled and chronically ill beneficiaries.

• Develops and tests new and innovative methods to improve the Medicaid program through demonstrations and best practices including managing review, approval, and oversight of the Section 1115 demonstrations.

• Directs the planning, coordination, and implementation of the survey, certification, and enforcement programs for all Medicare and Medicaid providers and suppliers, and for laboratories under the auspices of the Clinical Laboratory Improvement Act (CLIA). Reviews and approves applications by States for ''exemption'' from CLIA and applications from private accreditation organizations for deeming authority. Develops assessment techniques and protocols for periodically evaluating the performance of these entities. Monitors the performance of proficiency testing programs under the auspices of CLIA.

**10. Office of the Boston Regional Administrator (FAU1)**

• Assures the effective administration of CMS programs and implements national policy at the regional level.

• Develops policy, participates in the formulation of new policy and recommends changes in existing national policy for CMS programs.

• Monitors the regional administrative budget, including oversight of the regional travel funding allocation.

• Manages procurement and contracting activities, and personnel administration for the region.

• Serves as principal CMS contact for professional and provider/supplier organizations in the region's service area.

• Oversees workplanning, facilities and property management, labor-management relations, and staff training for the region.

• Initiates and directs the implementation of special regional and national projects.

• Assures effective relationships within the region with State and local governments, beneficiaries and their representatives, and the media.

• Coordinates with the DHHS Regional Director to assure effective relationships with Congressional representatives and State and local governments.

**11. Office of the New York Regional Administrator (FAU2)**

• Assures the effective administration of CMS programs and implements national policy at the regional level.

• Develops policy, participates in the formulation of new policy and recommends changes in existing national policy for CMS programs.

• Monitors the regional administrative budget, including oversight of the regional travel funding allocation.

• Manages procurement and contracting activities, automated data processing/local area network systems, and personnel administration for the region.

• Serves as principal CMS contact for professional and provider/supplier organizations in the region's service area.

• Oversees workplanning, facilities and property management, labor-management relations, and staff training for the region.

• Initiates and directs the implementation of special regional and national projects.

• Assures effective relationships within the region with State and local governments, beneficiaries and their representatives, and the media.

• Coordinates with the Department of Health and Human Services' Regional Director to assure effective relationships with Congressional representatives and State and local governments.

**12. Office of the Philadelphia Regional Administrator (FAU3)**

• Assures the effective administration of CMS programs and implements national policy at the regional level.

• Develops new policies and recommends changes in existing national policies for CMS programs.

• Monitors the regional administrative budget, including oversight of the regional travel funding allocation.

• Manages procurement and contracting activities and personnel administration for the region.

• Serves as principal CMS contact for professional and provider/supplier organizations in the region's service area.

• Oversees work planning, facilities and property management, labor-management relations, and staff training for the region.

• Initiates and directs the implementation of special regional and national projects. Assures effective relationships within the region with State and local governments, beneficiaries and their representatives, and the media.

• Coordinates with the Department of Health and Human Services' Regional Director to ensure effective relationships with elected officials as well as State and local governments.

**13. Office of the Atlanta Regional Administrator (FAV4)**

• Directs the planning, coordination, and implementation of the programs under Titles XI, XVIII, and XIX of the Social Security Act and related statutes within the Agency's regional/field offices that comprise the Atlanta and Dallas Regional Offices.

• Provides executive leadership and direction to the Agency's Regional Administrator(s) in the Atlanta and Dallas Regional Offices.

• Assures that the Agency's programs are carried out in the most effective and efficient manner within the Atlanta and Dallas Regional Offices, and that they are coordinated both at the Atlanta and Dallas level and with the Agency's headquarters' offices.

• Provides an Atlanta and Dallas perspective to the Agency's Administrator and other members of the Executive Council in such activities as strategic planning, determining the effectiveness of the Agency's programs and policies, budget formulation and execution, legislation, and administrative management.

• Assures that the Agency's national policies, programs and special initiatives are implemented effectively throughout the Atlanta and Dallas Regional Offices. Conducts local projects to improve the quality of medical care provided to beneficiaries and to control fraud, abuse and waste in the Agency's programs.

• Evaluates progress in the administration of the Agency's programs in the Atlanta and Dallas Regional Offices, ensuring that required actions are taken to direct or redirect efforts and/or resources to achieve program objectives.

• Working with the Regional Administrator(s) in the Atlanta and Dallas Regional Offices and the Agency's headquarters' leadership, assures that the information needs of the Medicare and Medicaid beneficiaries are fully understood and met, to the maximum degree possible. In association with other Agency components, maintains an understanding of the health care market that is operating in the Atlanta and Dallas Regional Offices in order to allow the Agency to adapt to changes in that market when appropriate.

• Assures that the Regional Administrator(s) in the Atlanta and Dallas Regional Offices fully coordinate the Agency's programs with other Health and Human Services' components, other Federal agencies, the Agency's contractors, State and local governments, professional associations, other interested groups, and the Agency's beneficiaries and/or representatives in their respective region.

• Working with the Agency's headquarters, manages the Atlanta and Dallas' administrative budget, to include the planning and allocation of resources to the regional offices comprising the Atlanta and Dallas Regional Offices.

• Provides executive leadership and guidance on behalf of the Atlanta and Dallas Regional Administrator to CMS components at the regional level.

• Serves on the Atlanta and Dallas Leadership Council, which sets the overall direction for the Atlanta and Dallas Regional Offices, and implements the Council's directions within the Region's service area.

• Effectively implements national policy, programs, and special initiatives at the regional level. Conducts local projects to improve the quality of medical care provided to beneficiaries and to control fraud, abuse, and waste in the Agency's programs.

• Assures that the information needs of the Medicare and Medicaid beneficiaries are fully understood and met, to the maximum degree possible. In association with other Agency components, maintains an understanding of the health care market that is operating in the Region in order to allow the Agency to adapt to changes in that market when appropriate.

• Participates in the formulation of new policy and recommends changes in existing national policy for CMS programs.

• Develops and implements a professional relations program within the Region for all CMS programs and serves as the principal CMS contact for all professional organizations such as hospital and medical associations.

• Fully coordinates the Agency's programs with other Health and Human Services' components including the Department's Regional Director, other Federal agencies, the Agency's contractors, State and local governments, professional associations, other interested groups, and the Agency's beneficiaries and/or representatives in the Region.

• Manages procurement and contracting activities, ADP/LAN systems, and personnel actions for the Region.

• Provides regional perspective to the Administrator and the Executive Council.

• Monitors the regional administrative budget, including oversight of the regional travel funding allocation.

**14. Office of the Chicago Regional Administrator (FAW5)**

• Serves as the principal office for Regional operations of CMS.

• Directs the administration of all CMS programs within the region.

• Sets the overall direction for the Chicago and Kansas City Regional Offices through the Midwest Consortium Advisory Board, and implements Board directions within the Region's service area.

• Monitors the Regional administrative budget, including oversight of the Regional travel funding allocation.

• Manages procurement and contracting activities, ADP/LAN systems, and personnel actions for the Region.

• Serves as principal CMS contact for professional and provider/supplier organizations in the Region's service area.

• Oversees work planning, facilities and property management, labor-management relations, merit promotion principles, EEO, and staff training for the Region.

• Coordinates environmental scanning and strategic planning for the Region. Pursues activities which enable the Regional staff to become knowledgeable regarding developments and trends in health care delivery within the States they serve.

• Serves as focal point among Regional Office components for special initiatives and broad cross-cutting issues.

**15. Office of the Dallas Regional Administrator (FAV6)**

• Provides executive leadership and guidance on behalf of the Atlanta and Dallas Regional Administrators to CMS components at the regional level.

• Serves on the Atlanta and Dallas Leadership Council, which sets the overall direction for the Regions, and implements the Council's directions within the Region's service area.

• Effectively implements national policy, programs, and special initiatives at the regional level. Conducts local projects to improve the quality of medical care provided to beneficiaries and to control fraud, abuse, and waste in the Agency's programs.

• Assures that the information needs of the Medicare and Medicaid beneficiaries are fully understood and met, to the maximum degree possible. In association with other Agency components, maintains an understanding of the health care market that is operating in the Region in order to allow the Agency to adapt to changes in that market when appropriate.

• Participates in the formulation of new policy and recommends changes in existing national policy for CMS programs.

• Develops and implements a professional relations program within the Region for all CMS programs and serves as the principal CMS contact for all professional organizations such as hospital and medical associations.

• Fully coordinates the Agency's programs with other Health and Human Services' components including the Department's Regional Director, other Federal agencies, the Agency's contractors, State and local governments, professional associations, other interested groups, and the Agency's beneficiaries and/or representatives in the Region.

• Manages procurement and contracting activities, ADP/LAN systems, and personnel actions for the Region.

• Provides regional perspective to the Administrator and the Executive Council.

• Monitors the regional administrative budget, including oversight of the regional travel funding allocation.

**16. Office of the Kansas City Regional Administrator (FAW7)**

• Serves as the principal official for regional operations of CMS and directs the administration of all CMS programs within the region.

• Directs the Consortium Survey and Certification and Consortium Contractor Management organizations.

• Monitors the regional administrative budget, including oversight of the regional travel funding allocation.

• Develops and implements a media relations plan to market CMS programs to the diverse populations of the region.

• Manages procurement and contracting activities, ADP/LAN systems, and personnel actions for the Region.

• Oversees work planning, facilities and property management, labor-management relations, merit promotion principles, EEO and staff training for the region.

• Coordinates environmental scanning and strategic planning for the region. Pursues activities which enable the Chicago and Kansas City regional staff to become knowledgeable regarding developments and trends in health care delivery within the states they serve.

• Serves as the focal point among regional office components for special initiatives and broad cross-cutting issues.

• Manages and executes the Health Insurance Portability and Accountability Act's insurance portability enforcement process for the nation.

**17. Office of the Denver Regional Administrator (FAX8)**

• The Office of the Regional Administrator directs the operations of programs administered by the CMS, including Medicare, Medicaid, Clinical Laboratory Improvement Act, and Health Insurance Portability and Accountability Act, in a distinct geographic area and provides executive leadership to regional office staff on behalf of the CMS Administrator.

• Develops and implements an outreach plan which includes media relations, community participation, speeches and presentations, and local Congressional office liaison, to market CMS programs to the diverse populations of the region.

• Manages the human and dollar resources of the regional office in an efficient and effective manner including work planning, facilities and property management, human resource management (recruitment, retention, training, development and performance management), and labor-management relations.

• Coordinates with the Department's Regional Director to assure effective relations with State and local governments and with other Departmental programs and offices.

• Evaluates diverse needs of constituents in the region and advises policy makers so that such needs are considered by CMS in national policy development.

• Develops expert opinion to advise national policy makers on concerns of American Indians and Alaska Natives as they relate to programs administered by HHS.

**18. Office of the San Francisco Regional Administrator (FAX9)**

• The Office of the Regional Administrator directs the operations of programs administered by the CMS, including Medicare, Medicaid, Clinical Laboratory Improvement Act, and Health Insurance Portability and Accountability Act, in a distinct geographic area and provides executive leadership to regional office staff on behalf of the CMS Administrator.

• Develops and implements an outreach plan which includes media relations, community participation, speeches and presentations, and local Congressional office liaison, to market CMS programs to the diverse populations of the region.

• Manages the human and dollar resources of the regional office in an efficient and effective manner including work planning, facilities and property management, human resource management (recruitment, retention, training, development and performance management), and labor-management relations.

• Coordinates with the Department's Regional Director to assure effective relations with State and local governments and with other Departmental programs and offices.

• Evaluates diverse needs of constituents in the region and advises policy makers so that such needs are considered by CMS in national policy development.

**19. Office of the Seattle Regional Administrator (FAXX)**

• The Office of the Regional Administrator directs the operations of programs administered by the CMS, including Medicare, Medicaid, Clinical Laboratory Improvement Act, and Health Insurance Portability and Accountability Act, in a distinct geographic area and provides executive leadership to regional office staff on behalf of the CMS Administrator.

• Develops and implements an outreach plan which includes media relations, community participation, speeches and presentations, and local Congressional office liaison, to market CMS programs to the diverse populations of the region.

• Manages the human and dollar resources of the regional office in an efficient and effective manner including work planning, facilities and property management, human resource management (recruitment, retention, training, development and performance management), and labor-management relations.

• Coordinates with the Department's Regional Director to assure effective relations with State and local governments and with other Departmental programs and offices.

• Evaluates diverse needs of constituents in the region and advises policy makers so that such needs are considered by CMS in national policy development.

• Designs and implements health care quality improvement projects and manages contracts of peer review organizations to improve health care quality in 13 Western States.

**20. Office of Operations Management (FAY)**

• Prepares and presents recommendations to the Administrator, Deputy Administrator, Chief Operating Officer and other high-level CMS and Department officials on planning, leadership, implementation and policy issues concerning modifications to existing and proposed operating policies that will improve the administration and operations of programs and the Agency as a whole.

• Provides consulting services internally to Agency management and staff to identify processes that need improvement, to develop improvement strategies, and to monitor processes and improvements over time. Participates in agency-wide initiatives to streamline operations, improve accountability and performance, and implement management best practices.

• Promotes project planning principles throughout the Agency and provides technical guidance to the Agency on project planning and management techniques. Prepares and presents recommendations to senior officials regarding major projects.

• Promotes and teaches risk assessment methods to business owners throughout CMS. Promotes awareness of the importance of risk analysis as a component of business planning and trains CMS staff in specific techniques and their applicability in particular situations.

• Identifies operational vulnerabilities within CMS and develops and executes an operational review plan for each fiscal year, subject to approval by the Deputy

Administrator, Chief Operating Officer and other senior leadership of CMS.

• Plans and conducts targeted internal audits and makes recommendations to strengthen internal audits and improve the operations of the Agency.

• Serves as the Agency focal point for emergency preparedness.

• Provides the Agency's internal customers (employees) with support in human resource management, procurement management, and logistics. Includes planning, organizing, coordinating, and evaluating needed activities in each area.

• Manages and directs the Agency's ethics and management programs; provides policy direction, coordination and support for administrative services including space, property, records, printing and facilities management, safety and security, and a centralized customer service desk.

• Provides administrative support functions for the Commissioned Corps.

• Develops and maintains administrative systems for ethics, awards, procurement, and property management.

• Provides staff support to the Provider Reimbursement Review Board (PRRB) and the Medicare Geographic Review Board (MGCRB).

• Conducts Medicare and Medicaid Hearings on behalf of the Secretary or the Administrator that are not within the jurisdiction of the Department Appeals Board, the Social Security Administration's Office of Hearings and Appeals, the PRRB, the MGCRB, or the States.

**21. Office of Information Services (FBB)**

• Serves as the focal point for the responsibilities of the Agency's Chief Information Officer in planning, organizing, and coordinating the activities required to maintain an agency-wide Information Resources Management (IRM) program.

• Ensures the effective management of the Agency's information technology, and information systems and resources (e.g., implementation and administration of a change management process).

• Provides workstation, server, and local area network support for CMS-wide activities. Works with customer components to develop requirements, needs and cost benefit analysis in support of the LAN infrastructure including hardware, software and office automation services.

• Serves as the lead for developing and enforcing the Agency's information architecture, policies, standards, and practices in all areas of information technology.

• Develops and maintains enterprise-wide central databases, statistical files, and general access paths, ensuring the quality of information maintained in these data sources.

• Directs Medicare claims payment systems activities, including CWF operation, as well as systems conversion activities.

• Develops ADP standards and policies for use by internal CMS staff and contractor agents in such areas as applications development and use of the infrastructure resources.

• Manages and directs the operation of CMS hardware infrastructure, including the Agency's Data Center, data communications networks, enterprise infrastructure, voice/data switch, audio conferencing and other data centers supporting CMS programs.

• Leads the coordination, development, implementation and maintenance of health care information standards in the health care industry.

• Provides Medicare and Medicaid information to the public, within the parameters imposed by the Privacy Act.

• Performs information collection analyses as necessary to satisfy the requirements of the Paperwork Reduction Act.

• Directs CMS' ADP systems security program with respect to data, hardware, and software.

• Directs and advises the Administrator, senior staff, and components on the requirements, policies, and administration of the Privacy Act.

**22. Office of Financial Management (FBC)**

• Serves as the Chief Financial Officer and Comptroller for the Agency.

• Formulates, presents and executes all Agency budget accounts; develops outlay plans and tracks contract and grant award amounts; acts as liaison with the Congressional Budget Office (CBO) on budget estimates; reviews demonstration waivers (except 1115) for revenue neutrality. Is responsible for ensuring that the budget is formulated in accordance with the Agency's strategic plan and the GPRA goals and performance measures.

• Acts as liaison with ASMB, OMB, and the Congressional appropriations committees for all matters concerning the Agency's operating budget.

• Manages the Medicare financial management system, the Medicare contractors' budgets, Peer Review Organizations' budgets, research budgets, managed care payments, the issuance of State Medicaid grants, and the funding of the State survey/certification and the CLIA programs. Is responsible for all Agency disbursements.

• Performs cash management activities and establishes and maintains systems to control the obligation of funds and ensure that the Anti-Deficiency Act is not violated.

• Performs the Agency's debt management activities (e.g., accounts receivable, user fees, penalties, disallowances).

• Reconciles all Agency financial data and prepares external reports to other agencies such as HHS, Treasury, OMB, Internal Revenue Service, General Services Administration, related to the Agency's obligations, expenditures, prompt payment activities, debt and cash management, and other administrative functions.

• Has overall responsibility for the fiscal integrity of all Agency programs. Develops and performs all benefit integrity policy and operations in coordination with other Agency components. Manages the Medicare program integrity contractors authorized by the HIPAA and managed care financial audit and enforcement functions. In coordination with the Center for Medicaid and State Operations, develops Medicaid program integrity policy; and monitors Medicaid program integrity activities.

• Working with other CMS components, develops Agency policies governing both Medicare Secondary Payer and Medicaid Third Party Liability.

• Develops and implements all civil money penalty policies in all programs.

• Prepares financial statements for *Federal Managers Financial Integrity Act* and GPRA.

**23. Office of Strategic Operations & Regulatory Affairs (FGA)**

• Manages the Agency's decision-making and regulatory process.

• Serves in a neutral broker coordination role which includes: Scheduling meetings and briefings for the Administrator and coordinating communications between and among central and regional offices to ensure that emerging issues are identified early, all concerned components are directly and fully involved in policy development/decision making, and that all points of view are presented.

• Provides leadership, direction, and advocacy, on behalf of top CMS officials in connection with official policy matters for presentation to the Administrator and Deputy Administrator/ Chief Operating Officer to insure that all points of view and

program interests of concern to the Administrator and Deputy Administrator/Chief Operating Officer are developed and properly presented for consideration. Reviews policy statements by component Directors and others to anticipate potential problems or inconsistencies with views of the Administrator, Deputy Administrator/ Chief Operating Officer, and the Administration. Assists in resolving these matters to the satisfaction of the Agency and top management.

• Manages meeting requests for or on behalf of the Administrator, and Deputy Administrator/Chief Operating Officer. Coordinates the preparation of briefing materials for the Administrator, Deputy Administrator/Chief Operating Officer, and the Department in advance of the Administrator and Deputy Administrator/Chief Operating Officer's participation in meetings, appointments with major groups, etc. Works with CMS components to assure that appropriate briefing materials are presented to Senior Leadership. Senior officials in CMS and the Department, as well as officials of other Federal agencies, State and local governments, and outside interest groups attend these meetings.

• Coordinates the preparation of manuals and other policy instructions to ensure accurate and consistent implementation of the Agency's programs.

• Manages the Agency's system for developing, clearing and tracking regulations, setting regulation priorities and corresponding work agendas; coordinates the review of regulations received for concurrence from departmental and other government agencies, and develops routine and special reports on the Agency's regulatory activities.

• Manages the regulations development process to ensure timely decision making by the Administrator and Deputy Administrator/Chief Operating Officer on CMS regulations.

• Provides leadership and management of the Agency's Executive Correspondence system. Operates the agency-wide correspondence tracking and control system and provides guidance and technical assistance on standards for content of correspondence and memoranda.

• Manages the agency-wide clearance system to ensure appropriate involvement from Agency components and serves as a primary focal point for liaison with the Executive Secretariat in the Office of the Secretary.

• Provides management and administrative support to the Office of the Attorney Advisor and staff.

• Acts as audit liaison with the General Accounting Office (GAO) and the HHS Office of Inspector General (OIG).

• Monitors and coordinates major CMS legislative initiatives such as tracking the status of the Agency's implementation of Balance Budget Act, Balanced Budget Refinement Act, and the Benefits Improvement and Protection Act provisions.

• Coordinates and prepares the advance planning reports for the Secretary and the Administrator (Secretary's Forecast Report).

• Acts as the liaison with the Office of the Secretary for Reports to the Congress and maintains a tracking system to monitor status. Also serves as the CMS liaison with the Small Business Administration's Office of the National Ombudsman.

• Develops standard processes for all CMS FACA committees and provides operational and logistical support to CMS components for conferences and on all matters relating to Federal Advisory Committees.

• Conducts activities necessary to the receipt, management, response, and reporting requirements of the Department under the Freedom of Information Act (FOIA) regarding all requests received by CMS.

• Maintains a log of all FOIA requests received by the central office, refers requests to the appropriate components within headquarters, the regions or among carriers and intermediaries for the collection of the documents requested. Makes recommendations and prepares replies to requesters, including denials of information as permitted under FOIA, and drafts briefing materials and responses in connection with appeals of denial decisions.

• Directs the maintaining and amending of CMS-wide records for confidentiality and disclosure to the Privacy Act to include: Planning, organizing, initiating and controlling privacy matching assignments.

• Provides direct services and develops policy, standards, and procedures for CMS' records, management and vital records program for all CMS Central and Regional Offices.

**24. Office of E-Health Standards and Services (FHA)**

• Develops and coordinates implementation of a comprehensive e-health strategy for CMS. Coordinates and supports internal and external technical activities related to e-health services and ensures that individual initiatives tie to the overall agency and Federal e-health goals strategies.

• Promotes and leverages innovative component initiatives. Facilitates cross-component awareness of various e-health projects.

• Develops regulations and guidance materials, and provides technical assistance on the Administrative Simplification provisions of the Health Insurance Portability and Accountability Act of 1996 (HIPAA), including transactions, code sets, identifiers, and security.

• Develops and implements the enforcement program for HIPAA Administrative Simplification provisions.

• Develops and implements an outreach program for HIPAA Administrative Simplification provisions. Formulates and coordinates a public relations campaign, prepares and delivers presentations and speeches, responds to inquiries on HIPAA issues, and maintains liaison with industry representatives.

• Adopts and maintains messaging and vocabulary standards supporting electronic prescribing under Medicare Part D.

• Serves as agency point of reference on Federal and private sector e-Health initiatives. Works with Federal departments and agencies to identify and adopt universal messaging and clinical health data standards, and represents CMS and HHS in national projects supporting the national health enterprise architecture and the national health information infrastructure.

• Coordinates and provides guidance on legislative and regulatory issues related to e-health standards and services.

• Collaborates with HHS on policy issues related to e-health standards, and serves as the central point of contact for the Office of the National Coordinator for Health Information Technology.

**25. Office of Acquisition & Grants Management (FKA)**

• Serves as the Agency's Head of the Contracting Activity. Plans, organizes, coordinates and manages the activities required to maintain an agency-wide acquisition program.

• Serves as the Agency's Chief Grants Management Official, with responsibility for all CMS discretionary grants.

• Ensures the effective management of the Agency's acquisition and grant resources.

• Serves as the lead for developing and overseeing the Agency's acquisition planning efforts.

• Develops policy and procedures for use by acquisition staff and internal CMS staff necessary to maintain

efficient and effective acquisition and grant programs.

• Advises and assists the Administrator, senior staff, and Agency components on acquisition and grant related issues.

• Plans, develops, and interprets comprehensive policies, procedures, regulations, and directives for CMS acquisition functions.

• Represents CMS at departmental acquisition and grant forums and functions, such as the Executive Council on Acquisition and the Executive Council for Grants Administration Policy.

• Serves as the CMS contact point with HHS and other Federal agencies relative to grant and cooperative agreement policy matters.

• Coordinates and/or conducts training for contracts and grant personnel, as well as project officers in CMS components.

• Develops agency-specific procurement guidelines for the utilization of small and disadvantaged business concerns in achieving an equitable percentage of CMS' contracting requirements.

• Provides cost/price analyses and evaluations required for the review, negotiation, award, administration, and closeout of grants and contracts. Provides support for field audit capability during the pre-award and closeout phases of contract and grant activities.

• Develops and maintains the OAGM automated procurement management system. Manages procurement information activities (i.e., collecting, reporting, and analyzing procurement data).

**26. Office of Policy (FLA)**

• Assists the Policy Council with immediate/rapid response on timely issues and transform concepts into institutionalized processes.

• Assists the MMA Council as requested to develop, implement, and coordinate a policy process for the agency for key major cross-cutting and policy issues resulting from MMA legislation and subsequent issues.

• Advises the Administrator on medical technical innovation and health information technology matters.

• Plans and develops future CMS program policy. Assists OL in the development of legislative strategies by providing analytic support for legislative options and proposals. Conducts legislative, economic, and policy analyses related to the overall structure of health care financing. Translates research findings into policy applications.

• Performs environmental scanning, identifying, evaluating, and reporting emerging trends to health care delivery and financing. Works with Agency components and outside organizations to obtain relevant information on emerging trends. Analyzes trends for their interactions with Agency programs and implications for future policy development and planning. Identifies emerging trends and policy issues that would benefit the Office of Research, Development, and Information's research, evaluation, and survey enterprises.

• Conducts management and development of the long-term strategic plan for the Agency. Provides analytic support and information to the Administrator and Senior Leadership needed to establish the Agency's goals and directions. Conducts special studies and analyses concerning Agency-wide planning issues.

• Provides data analyses, graphics presentations, briefing materials, and analyses on short notice to support the immediate needs of the Administrator and Senior Leadership.

• Manages strategic, cross-cutting initiatives as assigned by the Office of the Administrator.

• Facilitates policy development by providing analytic liaison with other components in HHS and elsewhere in the Administration.

• Serves as CMS' contact for international visitors. Responds to requests from intergovernmental agencies and the international community for information related to the United States health care system.

Dated: December 20, 2005.

**Karen Pelham O'Steen,**

*Director, Office of Operations Management, Centers for Medicare & Medicaid Services.*

[FR Doc. E5–8073 Filed 12–28–05; 8:45 am]

BILLING CODE 4120–01–P

---

## DEPARTMENT OF HEALTH AND HUMAN SERVICES

### Food and Drug Administration

### Training Program for Regulatory Project Managers; Information Available to Industry

**AGENCY:** Food and Drug Administration, HHS.

**ACTION:** Notice.

**SUMMARY:** The Food and Drug Administration (FDA) Center for Drug Evaluation and Research (CDER) is announcing the continuation of the Regulatory Project Management Site Tours and Regulatory Interaction Program (the Site Tours Program). The purpose of this notice is to invite pharmaceutical companies interested in participating in this program to contact CDER.

**DATES:** Pharmaceutical companies may submit proposed agendas to the agency by February 27, 2006.

**FOR FURTHER INFORMATION CONTACT:** Beth Duvall-Miller, Office of New Drugs (HFD–020), Center for Drug Evaluation and Research, Food and Drug Administration, 10903 New Hampshire Ave., Bldg 22, rm. 6466, Silver Spring, MD 20903, 301–796–0700, FAX: 301–796–9858.

**SUPPLEMENTARY INFORMATION:**

**I. Background**

An important part of CDER's commitment to make safe and effective drugs available to all Americans is optimizing the efficiency and quality of the drug review process. To support this primary goal, the Center has initiated various training and development programs to promote high performance in its regulatory project management staff. CDER seeks to significantly enhance review efficiency and review quality by providing the staff with a better understanding of the pharmaceutical industry and its operations. To this end, CDER is continuing its training program to give regulatory project managers the opportunity to tour pharmaceutical facilities. The goals are to provide the following: (1) First hand exposure to industry's drug development processes and (2) a venue for sharing information about project management procedures (but not drug-specific information) with industry representatives.

**II. Regulatory Project Management Site Tours and Regulatory Interaction Program**

In this program, over a 2- to 3-day period, small groups (five or less) of regulatory project managers, including a senior level regulatory project manager, can observe operations of pharmaceutical manufacturing and/or packaging facilities, pathology/toxicology laboratories, and regulatory affairs operations. Neither this tour nor any part of the program is intended as a mechanism to inspect, assess, judge, or perform a regulatory function, but is meant rather to improve mutual understanding and to provide an avenue for open dialogue. During the Site Tours Program, regulatory project managers will also participate in daily workshops with their industry counterparts, focusing on selective regulatory issues important to both CDER staff and

industry. The primary objective of the daily workshops is to learn about the team approach to drug development, including drug discovery, preclinical evaluation, tracking mechanisms, and regulatory submission operations.

The overall benefit to regulatory project managers will be exposure to project management, team techniques, and processes employed by the pharmaceutical industry. By participating in this program, the regulatory project manager will grow professionally by gaining a better understanding of industry processes and procedures.

### III. Site Selection

All travel expenses associated with the site tours will be the responsibility of CDER, therefore, selection will be based on the availability of funds and resources for each fiscal year.

Firms interested in offering a site tour or learning more about this training opportunity should respond within 60 days of this notice by submitting a proposed agenda to Beth Duvall-Miller (see **FOR FURTHER INFORMATION CONTACT**).

Dated: December 21, 2005.

**Jeffrey Shuren,**

*Assistant Commissioner for Policy.*

[FR Doc. E5–8017 Filed 12–28–05; 8:45 am]

**BILLING CODE 4160–01–S**

---

## DEPARTMENT OF HOMELAND SECURITY

## Coast Guard

**[USCG–2005–23422]**

## Collection of Information Under Review by Office of Management and Budget: OMB Control Number 1625–0073

**AGENCY:** Coast Guard, DHS.

**ACTION:** Request for comments.

**SUMMARY:** In compliance with the Paperwork Reduction Act of 1995, the U.S. Coast Guard intends to seek the approval of OMB for the renewal of an Information Collection Request (ICR). The ICR is 1625–0073, Alteration of Unreasonably Obstructive Bridges Under the Truman-Hobbs (T–H) Act. Before submitting the ICR to OMB, the Coast Guard is inviting comments on them as described below.

**DATES:** Comments must reach the Coast Guard on or before February 27, 2006.

**ADDRESSES:** To make sure that your comments and related material do not enter the docket [USCG–2005–23422] more than once, please submit them by only one of the following means:

(1) By mail to the Docket Management Facility, U.S. Department of Transportation (DOT), room PL–401, 400 Seventh Street, SW., Washington, DC 20590–0001.

(2) By delivery to room PL–401 on the Plaza level of the Nassif Building, 400 Seventh Street. SW., Washington, DC, between 9 a.m. and 5 p.m., Monday through Friday, except Federal holidays. The telephone number is 202–366–9329.

(3) By fax to the Docket Management Facility at 202–493–2251.

(4) Electronically through the Web Site for the Docket Management System at *http://dms.dot.gov*.

The Docket Management Facility maintains the public docket for this notice. Comments and material received from the public, as well as documents mentioned in this notice as being available in the docket, will become part of this docket and will be available for inspection or copying at room PL–401 on the Plaza level of the Nassif Building, 400 Seventh Street, SW., Washington, DC, between 9 a.m. and 5 p.m., Monday through Friday, except Federal holidays. You may also find this docket on the Internet at *http://dms.dot.gov*.

Copies of the complete ICR is available through this docket on the Internet at *http://dms.dot.gov*, and also from Commandant (CG–611), U.S. Coast Guard Headquarters, room 1236 (Attn: Mr. Arthur Requina), 1900 Half Street, SW., Washington, DC 20593–0001. The telephone number is 202–475–3523.

**FOR FURTHER INFORMATION CONTACT:** Mr. Arthur Requina, Office of Information Management, telephone 202–475–3523, or fax 202–475–3929, for questions on these documents; or telephone Ms. Renee V. Wright, Program Manager, Docket Operations, 202–493–0402, for questions on the docket.

**SUPPLEMENTARY INFORMATION:**

### Public Participation and Request for Comments

We encourage you to respond to this request for comments by submitting comments and related materials. We will post all comments received, without change, to *http://dms.dot.gov*; they will include any personal information you have provided. We have an agreement with DOT to use the Docket Management Facility. Please see the paragraph on DOT's ''Privacy Act Policy'' below.

### Submitting Comments

If you submit a comment, please include your name and address, identify the docket number [USCG–2005–23422], indicate the specific section of the document to which each comment applies, and give the reason for each comment. You may submit your comments and material by electronic means, mail, fax, or delivery to the Docket Management Facility at the address under **ADDRESSES**; but please submit them by only one means. If you submit them by mail or delivery, submit them in an unbound format, no larger than 8½ by 11 inches, suitable for copying and electronic filing. If you submit them by mail and would like to know that they reached the Facility, please enclose a stamped, self-addressed postcard or envelope. We will consider all comments and material received during the comment period. We may change the documents supporting this collection of information or even the underlying requirements in view of them.

### Viewing Comments and Documents

To view comments, as well as documents mentioned in this notice as being available in the docket, go to *http://dms.dot.gov* at any time and conduct a simple search using the docket number. You may also visit the Docket Management Facility in room PL–401 on the Plaza level of the Nassif Building, 400 Seventh Street SW., Washington, DC, between 9 a.m. and 5 p.m., Monday through Friday, except Federal holidays.

### Privacy Act

Anyone can search the electronic form of all comments received in dockets by the name of the individual submitting the comment (or signing the comment, if submitted on behalf of an association, business, labor union, etc.). You may review the Privacy Act Statement of DOT in the **Federal Register** published on April 11, 2000 (65 FR 19477), or you may visit *http://dms.dot.gov*.

### Information Collection Request

*Title:* Alteration of Unreasonably Obstructive Bridges Under the Truman-Hobbs (T–H) Act.

*OMB Control Number:* 1625–0073.

*Summary:* The collection of information is a request to determine if a bridge is unreasonably obstructive to navigation.

*Need:* 33 U.S.C. 494, 502, 511, 513, 514, 516 and 517 authorize the Coast Guard to alter bridges and causeways that go over navigable waters of the United States deemed to be unreasonably obstructive.

*Respondents:* Public and private owners of bridges over navigable waters of the United States.

*Frequency:* On occasion.

*Burden Estimate:* The estimated burden has increased from 120 hours to 200 hours a year.

Dated: December 22, 2005.

**R.T. Hewitt,**

*Rear Admiral, Assistant Commandant for Command, Control, Communications Computers and Information Technology.*

[FR Doc. E5–8085 Filed 12–28–05; 8:45 am]

**BILLING CODE 4910–15–P**

## DEPARTMENT OF HOMELAND SECURITY

### U.S. Citizenship and Immigration Services

### Agency Information Collection Activities: Current Request

**ACTION:** 60-day notice of information collection under review; Immigrant Petition for Alien Workers, Form I–140; OMB Control Number 1615–0015.

The Department of Homeland Security, U.S. Citizenship and Immigration Services has submitted the following information collection request for review and clearance in accordance with the Paperwork Reduction Act of 1995. The information collection is published to obtain comments from the public and affected agencies. Comments are encouraged and will be accepted for sixty days until February 27, 2006.

Written comments and/or suggestions regarding the item(s) contained in this notice, especially regarding the estimated public burden and associated response time, should be directed to the Department of Homeland Security (DHS), USCIS, Director, Regulatory Management Division, Clearance Office, 111 Massachusetts Avenue, 3rd floor, Washington, DC 20529. Comments may also be submitted to DHS via facsimile to 202–272–8352 or via e-mail at *rfs.regs@dhs.gov*. When submitting comments by e-mail please make sure to add OMB Control Number 1615–0015 in the subject box. Written comments and suggestions from the public and affected agencies should address one or more of the following four points:

(1) Evaluate whether the collection of information is necessary for the proper performance of the functions of the agency, including whether the information will have practical utility;

(2) Evaluate the accuracy of the agencies estimate of the burden of the collection of information, including the validity of the methodology and assumptions used;

(3) Enhance the quality, utility, and clarity of the information to be collected; and

(4) Minimize the burden of the collection of information on those who are to respond, including through the use of appropriate automated, electronic, mechanical, or other technological collection techniques or other forms of information technology, e.g., permitting electronic submission of responses.

Overview of this information collection:

(1) *Type of Information Collection:* Extension of existing information collection.

(2) *Title of the Form/Collection:* Immigrant Petition for Alien Workers.

(3) *Agency form number, if any, and the applicable component of the Department of Homeland Security sponsoring the collection:* Form I–140; U.S. Citizenship and Immigration Services.

(4) *Affected public who will be asked or required to respond, as well as a brief abstract:* Primary: Individuals or households. This form is used to classify a person under seciton 203(b)(1), 203(b)(2), or 203(b)(3) of the Immigration and Nationality Act. The data collected on this form will be used by USCIS to determine eligibility for the requested immigration benefit.

(5) *An estimate of the total number of respondents and the amount of time estimated for an average respondent to respond:* 96,000 responses at 60 minutes (1 hour) per response.

(6) *An estimate of the total public burden (in hours) associated with the collection:* 96,000 annual burden hours.

If you have additional comments, suggestions, or need a copy of the proposed information collection instrument with instructions, or additional information, please visit the USCIS Web site at: *http://uscis.gov/graphics/formsfee/forms/pra/index.htm*.

If additional information is required contact: USCIS, Regulatory Management Division, 111 Massachusetts Avenue, 3rd Floor, Washington, DC 20529, (202) 272–8377.

Dated: December 23, 2005.

**Stephen Tarragon,**

*Deputy Director, Regulatory Management Division, U.S. Citizenship and Immigration Services.*

[FR Doc. 05–24588 Filed 12–28–05; 8:45 am]

**BILLING CODE 4410–10–M**

## DEPARTMENT OF HOMELAND SECURITY

### U.S. Citizenship and Immigration Services

### Agency Information Collection Activities: Extension of Existing Collection; Comment Request

**ACTION:** 60-day notice of information collection under review: Request for Fee Waiver Denial Letter, Form G–1054; OMB Control No. 1615–0098.

The Department of Homeland Security, U.S. Citizenship and Immigration Services has submitted the following information collection request for review and clearance in accordance with the Paperwork Reduction Act of 1995. The information collection is published to obtain comments from the public and affected agencies. Comments are encouraged and will be accepted by sixty days until February 27, 2006.

Written comments and/or suggestions regarding the item(s) contained in this notice, especially regarding the estimated public burden and associated response time, should be directed to the Department of Homeland Security (DHS), USCIS, Director, Regulatory Management Division, Clearance Office, 111 Massachusetts Avenue, 3rd floor, Washington, DC 20529. Comments may also be submitted to DHS via facsimile to 202–272–8352 or via e-mail at *rfs.regs@dhs.gov.* When submitting comments by e-mail please make sure to add OMB Control Number 1615–0089 in the subject box. Written comments and suggestions from the public and affected agencies should address one or more of the following four points:

(1) Evaluate whether the proposed collection of information is necessary for the proper performance of the functions of the agency, including whether the information will have practical utility;

(2) Evaluate the accuracy of the agencies estimate of the burden of the proposed collection of information, including the validity of the methodology and assumptions used;

(3) Enhance the quality, utility, and clarity of the information to be collected; and

(4) Minimize the burden of the collection of information on those who are to respond, including through the use of appropriate automated, electronic, mechanical, or other technological collection techniques or other forms of information technology, e.g., permitting electronic submission of responses.

Overview of this information collection:

(1) *Type of Information Collection:* Extension of a currently approved information collection.

(2) *Title of the Form/Collection:* Request for Fee Waiver Denial Letter.

(3) *Agency form number, if any, and the applicable component of the Department of Homeland Security sponsoring the collection:* Form G–1054; U.S. Citizenship and Immigration Services (CIS).

(4) *Affected public who will be asked or required to respond, as well as a brief abstract:* Primary: Individuals or Households. The regulations at 8 CFR 103.7(c) allows U.S. Citizenship and Immigration Services (USCIS) to waive fees for benefits under the Immigration and Nationality Act (Act). This form is used to maintain consistency in the adjudication of fee waiver requests, to collect accurate data on amounts of fee waivers, and to facilitate the public-use process.

(5) *An estimate of the total number of respondents and the amount of time estimated for an average respondent to respond:* 16,000 responses at 1.25 hours (75 minutes) per response.

(6) *An estimate of the total public burden (in hours) associated with the collection:* 20,000 annual burden hours.

If you have additional comments, suggestions, or need a copy of the proposed information collection instrument with instructions, or additional information, please visit the USCIS Web site at: *http://uscis.gov/graphics/formsfee/forms/pra/index.htm.*

If additional information is required contact: USCIS, Regulatory Management Division, 111 Massachusetts Avenue, 3rd Floor, Washington, DC 20529, (202) 272–8377.

Dated: December 23, 2005.

**Stephen Tarragon,**

*Deputy Director, Regulatory Management Division, U.S. Citizenship and Immigration Services.*

[FR Doc. 05–24589 Filed 12–28–05; 8:45 am]

**BILLING CODE 4410–10–M**

## DEPARTMENT OF HOMELAND SECURITY

## U.S. Citizenship and Immigration Services

## Agency Information Collection Activities: Comment Request

**ACTION:** 45-day notice of information collection under review: i-account, USCIS Form 1.

The Department of Homeland Security, U.S. Citizenship and Immigration Services (USCIS) has submitted the following information collection request to the Office of Management and Budget (OMB) for review and clearance in accordance with the Paperwork Reduction Act of 1995. The information collection is published to obtain comments from the public and affected agencies. Comments are encouraged and will be accepted for forty-five days until February 13, 2006.

Written comments and/or suggestions regarding the item(s) contained in this notice, especially regarding the estimated public burden and associated response time, should be directed to the Department of Homeland Security (DHS), USCIS, Director, Regulatory Management Division, Clearance Office, 111 Massachusetts Avenue, 3rd Floor, Washington, DC 20529. Comments may also be submitted to DHS via facsimile to 202–272–8352 or via e-mail at *rfs.regs@dhs.gov.* When submitting comments by e-mail please make sure to add USCIS Form 1 in the subject box. Written comments and suggestions from the public and affected agencies concerning the collection of information should address one or more of the following four points:

(1) Evaluate whether the collection of information is necessary for the proper performance of the functions of the agency, including whether the information will have practical utility;

(2) Evaluate the accuracy of the agency's estimate of the burden of the collection of information, including the validity of the methodology and assumptions used;

(3) Enhance the quality, utility, and clarity of the information to be collected; and

(4) Minimize the burden of the collection of information on those who are to respond, including through the use of appropriate automated, electronic, mechanical, or other technological collection techniques or other forms of information technology, *e.g.*, permitting electronic submission of responses.

Overview of this information collection:

### General Information

The U.S. Citizenship and Immigration Services (USCIS) is planning a broad restructuring of its business processes to move from an exclusively transaction based focus to customer accounts. Account management will permit USCIS to streamline benefits processing and eliminate the capture and processing of redundant data.

In some respects the account focus represents more comprehensive information than USCIS has previously collected at one time. However, an account focus eliminates redundancy in that customers will not have to give the same information repeatedly. In addition, in many respects the account represents less total information than is cumulatively collected today as customers file various applications in their lifecycle with USCIS. But the American public expects USCIS to ask what it needs to know and to link that data with biometrics in order to deter and detect fraud, and thereby reduce national security risks. Moreover, the account system allows USCIS to avoid burdening the customer with repeated requests for the same information. It allows for address changes to be made by individuals, employers, and representatives *one time* in *one place* for all purposes, solving a huge customer and administrative burden to date. This account system finds the common ground between USCIS objectives and customer service, national security, and administrative efficiency. USCIS will be promulgating a rulemaking in the near future.

(1) *Type of Information Collection:* New Collection.

(2) *Title of the Form/Collection:* USCIS i-account.

(3) *Agency form number, if any, and the applicable component sponsoring the collection:* USCIS Form I–1. Adjudications Division, USCIS.

(4) *Affected public who will be asked or required to respond, as well as a brief abstract:* Primary: Business or other for-profit. This form is used for collecting biographic information that can be updated at future encounters. It is also used as a unique personal identifier for transactions with USCIS.

(5) *An estimate of the total number of respondents and the amount of time estimated for an average respondent to respond:* 2,500,000 responses at 1 hours and 30 minutes (1.5 hours) per response.

(6) *An estimate of the total public burden (in hours) associated with the collection:* 3,750,000 annual burden hours.

If you have additional comments, suggestions, or need a copy of the proposed information collection instrument with instructions, or additional information, please visit the USCIS Web site at: *http://uscis.gov/graphics/formsfee/forms/pra/index.htm.*

If additional information is required contact: USCIS, Regulatory Management Division, 111 Massachusetts Avenue, 3rd Floor, Washington, DC 20529, (202) 272–8377.

Dated: December 23, 2005.

**Richard A. Sloan,**

*Director, Regulatory Management Division, U.S. Citizenship and Immigration Services.*

[FR Doc. 05–24634 Filed 12–28–05; 8:45 am]

**BILLING CODE 4410–10–P**

## DEPARTMENT OF HOMELAND SECURITY

### U.S. Citizenship and Immigration Services

### Agency Information Collection Activities: Comment Request

**ACTION:** 45-Day Notice of Information Collection under Review: Application for Change or Extension of Nonimmigrant Status for H–1B, Form 41.

The Department of Homeland Security, U.S. Citizenship and Immigration Services (USCIS) has submitted the following information collection request to the Office of Management and Budget (OMB) for review and clearance in accordance with the Paperwork Reduction Act of 1995. The information collection is published to obtain comments from the public and affected agencies. Comments are encouraged and will be accepted for forty-five days until February 13, 2006.

Written comments and/or suggestions regarding the item(s) contained in this notice, especially regarding the estimated public burden and associated response time, should be directed to the Department of Homeland Security (DHS), USCIS, Director, Regulatory Management Division, Clearance Office, 111 Massachusetts Avenue, 3rd floor, Washington, DC 20529. Comments may also be submitted to DHS via facsimile to 202–272–8352 or via e-mail at *rfs.regs@dhs.gov.* When submitting comments by e-mail please make sure to add USCIS Form I–41 in the subject box. Written comments and suggestions from the public and affected agencies concerning the collection of information should address one or more of the following four points:

(1) Evaluate whether the collection of information is necessary for the proper performance of the functions of the agency, including whether the information will have practical utility;

(2) Evaluate the accuracy of the agency's estimate of the burden of the collection of information, including the validity of the methodology and assumptions used;

(3) Enhance the quality, utility, and clarity of the information to be collected; and

(4) Minimize the burden of the collection of information on those who are to respond, including through the use of appropriate automated, electronic, mechanical, or other technological collection techniques or other forms of information technology, e.g., permitting electronic submission of responses.

Overview of this information collection:

(1) *Type of Information Collection:* New Collection.

(2) *Title of the Form/Collection:* Application for Change or Extension of Nonimmigrant Status for H–1B.

(3) *Agency form number, if any, and the applicable component of the Department of Homeland Security sponsoring the collection:* USCIS Form 41 U.S. Citizenship and Immigration Services.

(4) *Affected public who will be asked or required to respond, as well as a brief abstract:* Primary: Individuals and Households. This form is used to check other agency records on application or petitions submitted for benefits under the Immigration and Nationality Act. Additionally, this form is required for applicants for adjustment to permanent resident status and specific applicants for naturalization.

(5) *An estimate of the total number of respondents and the amount of time estimated for an average respondent to respond:* 266,000 responses at 30 minutes (.50 hours) per response.

(6) *An estimate of the total public burden (in hours) associated with the collection:* 133,000 annual burden hours.

If you have additional comments, suggestions, or need a copy of the proposed information collection instrument with instructions, or additional information, please visit the USCIS Web site at: *http://uscis.gov/graphics/formsfee/forms/pra/index.htm.*

If additional information is required contact: USCIS, Regulatory Management Division, 111 Massachusetts Avenue, 3rd Floor, Washington, DC 20529, (202) 272–8377.

Dated: December 23, 2005.

**Richard A. Sloan,**

*Director, Regulatory Management Division, U.S. Citizenship and Immigration Services.*

[FR Doc. 05–24635 Filed 12–28–05; 8:45 am]

**BILLING CODE 4410–10–P**

## DEPARTMENT OF HOMELAND SECURITY

### U.S. Citizenship and Immigration Services

### Agency Information Collection Activities: Comment Request

**ACTION:** 45-Day Notice of Information Collection under Review: r-account, USCIS Form 3.

The Department of Homeland Security, U.S. Citizenship and Immigration Services (USCIS) has submitted the following information collection request to the Office of Management and Budget (OMB) for review and clearance in accordance with the Paperwork Reduction Act of 1995. The information collection is published to obtain comments from the public and affected agencies. Comments are encouraged and will be accepted for forty-five days until February 13, 2006.

Written comments and/or suggestions regarding the item(s) contained in this notice, especially regarding the estimated public burden and associated response time, should be directed to the Department of Homeland Security (DHS), USCIS, Director, Regulatory Management Division, Clearance Office, 111 Massachusetts Avenue, 3rd floor, Washington, DC 20529. Comments may also be submitted to DHS via facsimile to 202–272–8352 or via e-mail at *rfs.regs@dhs.gov.* When submitting comments by e-mail please make sure to add USCIS Form 3 in the subject box. Written comments and suggestions from the public and affected agencies concerning the collection of information should address one or more of the following four points:

(1) Evaluate whether the collection of information is necessary for the proper performance of the functions of the agency, including whether the information will have practical utility;

(2) Evaluate the accuracy of the agency's estimate of the burden of the collection of information, including the validity of the methodology and assumptions used;

(3) Enhance the quality, utility, and clarity of the information to be collected; and

(4) Minimize the burden of the collection of information on those who are to respond, including through the use of appropriate automated, electronic, mechanical, or other technological collection techniques or other forms of information technology, *e.g.*, permitting electronic submission of responses.

Overview of this information collection:

**General Information**

The U.S. Citizenship and Immigration Services (USCIS) is planning a broad restructuring of its business processes to move from an exclusively transaction based focus to customer accounts. Account management will permit USCIS to streamline benefits processing and eliminate the capture and processing of redundant data.

In some respects the account focus represents more comprehensive information than USCIS has previously collected at one time. However, an account focus eliminates redundancy in that customers will not have to give the same information repeatedly. In addition, in many respects the account represents less total information than is cumulatively collected today as customers file various applications in their lifecycle with USCIS. But the American public expects USCIS to ask what it needs to know and to link that data with biometrics in order to deter and detect fraud, and thereby reduce national security risks. Moreover, the account system allows USCIS to avoid burdening the customer with repeated requests for the same information. It allows for address changes to be made by individuals, employers, and representatives *one time* in *one place* for all purposes, solving a huge customer and administrative burden to date. This account system finds the common ground between USCIS objectives and customer service, national security, and administrative efficiency. USCIS will be promulgating a rulemaking in the near future.

(1) *Type of Information Collection:* New Collection.

(2) *Title of the Form/Collection:* r-account.

(3) *Agency form number, if any, and the applicable component sponsoring the collection:* USCIS Form 3. Office of Program and Regulations Development, U.S. Citizenship and Immigration Services.

(4) *Affected public who will be asked or required to respond, as well as a brief abstract:* Primary: Business or other for-profit entities. Secondary: Non-for-profit institutions. An attorney or accredited representative will use USCIS Form 3 to register with USCIS as a prerequisite to appearing before USCIS on behalf of an individual submitting an application or petition for an immigration benefit.

(5) *An estimate of the total number of respondents and the amount of time estimated for an average respondent to respond:* 10,000 responses at .33 hours (20 minutes) per response.

(6) *An estimate of the total public burden (in hours) associated with the collection:* 3,300 annual burden hours. Attorneys and accredited representatives will only be required to file USCIS Form 3 once. Therefore, because most attorneys and accredited representatives handle matters before USCIS for longer than one year, we expect the number of respondents, and the reporting burden and costs derived from that number, to drop after one year.

If you have additional comments, suggestions, or need a copy of the proposed information collection instrument with instructions, or additional information, please visit the USCIS Web site at: *http://uscis.gov/graphics/formsfee/forms/pra/index.htm.*

*If additional information is required contact:* USCIS, Regulatory Management Division, 111 Massachusetts Avenue, 3rd Floor, Washington, DC 20529, (202) 272–8377.

Dated: December 23, 2005.

**Richard A. Sloan,**

*Director, Regulatory Management Division, U.S. Citizenship and Immigration Services.*

[FR Doc. 05–24636 Filed 12–28–05; 8:45 am]

BILLING CODE 4410–10–P

---

## DEPARTMENT OF HOMELAND SECURITY

### U.S. Citizenship and Immigration Services

### Agency Information Collection Activities: Comment Request

**ACTION:** 45-Day Notice of Information Collection under Review: Petition for Temporary Worker— H–1B Cap, Form 60.

---

The Department of Homeland Security, U.S. Citizenship and Immigration Services (USCIS) has submitted the following information collection request to the Office of Management and Budget (OMB) for review and clearance in accordance with the Paperwork Reduction Act of 1995. The information collection is published to obtain comments from the public and affected agencies. Comments are encouraged and will be accepted for forty-five days until February 13, 2006.

Written comments and/or suggestions regarding the item(s) contained in this notice, especially regarding the estimated public burden and associated response time, should be directed to the Department of Homeland Security (DHS), USCIS, Director, Regulatory Management Division, Clearance Office, 111 Massachusetts Avenue, 3rd floor, Washington, DC 20529. Comments may also be submitted to DHS via facsimile to 202–272–8352 or via e-mail at *rfs.regs@dhs.gov.* When submitting comments by e-mail please make sure to add USCIS Form 60 in the subject box. Written comments and suggestions from the public and affected agencies concerning the collection of information should address one or more of the following four points:

(1) Evaluate whether the collection of information is necessary for the proper performance of the functions of the agency, including whether the information will have practical utility;

(2) Evaluate the accuracy of the agency's estimate of the burden of the collection of information, including the validity of the methodology and assumptions used;

(3) Enhance the quality, utility, and clarity of the information to be collected; and

(4) Minimize the burden of the collection of information on those who are to respond, including through the use of appropriate automated, electronic, mechanical, or other technological collection techniques or other forms of information technology, e.g., permitting electronic submission of responses.

Overview of this information collection:

(1) *Type of Information Collection:* New Collection.

(2) *Title of the Form/Collection:* Petition for Temporary Worker—H–1B Cap.

(3) *Agency form number, if any, and the applicable component sponsoring the collection:* USCIS Form 60. U.S. Citizenship and Immigration Services.

(4) *Affected public who will be asked or required to respond, as well as a brief abstract:* Primary: Business or other for-profit. This form will be required to be filed by employers petitioning for temporary workers for H–1B classification who are subject to the annual numeric limitation. Employers who are petitioning for temporary workers in H–1B classification who are not subject to the H–1B annual numerical cap may use the Form 60 if they wish.

(5) *An estimate of the total number of respondents and the amount of time estimated for an average respondent to respond:* 90,000 responses at 2 hours per response.

(6) *An estimate of the total public burden (in hours) associated with the collection:* 180,000 annual burden hours.

If you have additional comments, suggestions, or need a copy of the proposed information collection instrument with instructions, or additional information, please visit the

USCIS Web site at: *http://uscis.gov/graphics/formsfee/forms/pra/index.htm.*

If additional information is required contact: USCIS, Regulatory Management Division, 111 Massachusetts Avenue, 3rd Floor, Washington, DC 20529, (202) 272–8377.

Dated: December 23, 2005.

**Richard A. Sloan,**

*Director, Regulatory Management Division, U.S. Citizenship and Immigration Services.*

[FR Doc. 05–24637 Filed 12–28–05; 8:45 am]

**BILLING CODE 4410–10–P**

## DEPARTMENT OF HOMELAND SECURITY

### U.S. Citizenship and Immigration Services

### Agency Information Collection Activities: Comment Request

**ACTION:** 45-day notice of information collection under review: Employer Registration, USCIS Form 2.

The Department of Homeland Security, U.S. Citizenship and Immigration Services (USCIS) has submitted the following information collection request to the Office of Management and Budget (OMB) for review and clearance in accordance with the Paperwork Reduction Act of 1995. The information collection is published to obtain comments from the public and affected agencies. Comments are encouraged and will be accepted for forty-five days until February 13, 2006.

Written comments and/or suggestions regarding the item(s) contained in this notice, especially regarding the estimated public burden and associated response time, should be directed to the Department of Homeland Security (DHS), USCIS, Director, Regulatory Management Division, Clearance Office, 111 Massachusetts Avenue, 3rd floor, Washington, DC 20529. Comments may also be submitted to DHS via facsimile to 202–272–8352 or via e-mail at *rfs.regs@dhs.gov.* When submitting comments by e-mail please make sure to add USCIS Form 2 in the subject box. Written comments and suggestions from the public and affected agencies concerning the collection of information should address one or more of the following four points:

(1) Evaluate whether the collection of information is necessary for the proper performance of the functions of the agency, including whether the information will have practical utility;

(2) Evaluate the accuracy of the agency's estimate of the burden of the collection of information, including the validity of the methodology and assumptions used;

(3) Enhance the quality, utility, and clarity of the information to be collected; and

(4) Minimize the burden of the collection of information on those who are to respond, including through the use of appropriate automated, electronic, mechanical, or other technological collection techniques or other forms of information technology, e.g., permitting electronic submission of responses.

Overview of this information collection:

**General Information**

The U.S. Citizenship and Immigration Services (USCIS) is planning a broad restructuring of its business processes to move from an exclusively transaction based focus to customer accounts. Account management will permit USCIS to streamline benefits processing and eliminate the capture and processing of redundant data.

In some respects the account focus represents more comprehensive information than USCIS has previously collected at one time. However, an account focus eliminates redundancy in that customers will not have to give the same information repeatedly. In addition, in many respects the account represents less total information than is cumulatively collected today as customers file various applications in their lifecycle with USCIS. But the American public expects USCIS to ask what it needs to know and to link that data with biometrics in order to deter and detect fraud, and thereby reduce national security risks. Moreover, the account system allows USCIS to avoid burdening the customer with repeated requests for the same information. It allows for address changes to be made by individuals, employers, and representatives one time in one place for all purposes, solving a huge customer and administrative burden to date. This account system finds the common ground between USCIS objectives and customer service, national security, and administrative efficiency. USCIS will be promulgating a rulemaking in the near future.

(1) *Type of Information Collection:* New Collection.

(2) *Title of the Form/Collection:* USCIS Form 2 Employer Registration.

(3) *Agency form number, if any, and the applicable component of the Department of Homeland Security sponsoring the collection:* USCIS Form 2 Employer Registration. U.S. Citizenship and Immigration Services.

(4) *Affected public who will be asked or required to respond, as well as a provide brief abstract: Primary:* Individuals or households, Business or other for-profit, and Not-for-profit institutions. This form is used to collect biographical information, and register and create an account for employers seeking to employ foreign workers on temporary or permanent basis.

(5) *An estimate of the total number of respondents and the amount of time estimated for an average respondent to respond:* 718,223 responses at 1 hour and 45 minutes (1.75 hours) per response.

(6) *An estimate of the total public burden (in hours) associated with the collection:* 1,256,890 annual burden hours.

If you have additional comments, suggestions, or need a copy of the proposed information collection instrument with instructions, or additional information, please visit the USCIS Web site at: *http://uscis.gov/graphics/formsfee/forms/pra/index.htm.*

If additional information is required contact: USCIS, Regulatory Management Division, 111 Massachusetts Avenue, 3rd Floor, Washington, DC 20529, (202) 272–8377.

Dated: December 23, 2005.

**Richard A. Sloan,**

*Director, Regulatory Management Division, U.S. Citizenship and Immigration Services.*

[FR Doc. 05–24638 Filed 12–28–05; 8:45 am]

**BILLING CODE 4410–10–P**

## DEPARTMENT OF HOUSING AND URBAN DEVELOPMENT

**[Docket No. FR–4976–N–02]**

### Notice of Proposed Information Collection: Comment Request; Requirements for Notification of Lead-Based Paint Hazards in Federally-Owned Residential Properties and Housing Receiving Federal Assistance

**AGENCY:** Office of Healthy Homes and Lead Hazard Control, HUD.

**ACTION:** Notice.

**SUMMARY:** The proposed information collection requirement described below will be submitted to the Office of Management and Budget (OMB) for review, as required by the Paperwork Reduction Act. The Department is soliciting public comments on the subject proposal.

**DATES:** *Comments Due Date:* February 27, 2006.

**ADDRESSES:** Interested persons are invited to submit comments regarding this proposal. Comments should refer to

the proposal by name and/or OMB Control Number and should be sent to: Wayne Eddins, AYO, Reports Management Officer, Department of Housing and Urban Development, 451 7th Street, SW., L'Enfant Plaza Building, Room 8003, Washington, DC 20410; fax: 202–708–3135; e-mail *Wayne_Eddins@HUD.gov*.

**FOR FURTHER INFORMATION CONTACT:** Robert F. Weisberg, LM, Program Management and Assurance Division, Office of Healthy Homes & Lead Hazard Control, Department of Housing and Urban Development, 451 Seventh Street, Southwest, Washington, DC 20410; e-mail *Robert_F._Weisberg@hud.gov* telephone (202) 755–1785 Ext. 142; Fax: (202) 755–1000 (these are not toll-free numbers) for other available information. If you are a hearing- or speech-impaired person, you may reach the above telephone numbers through TTY by calling the toll-free Federal Information Relay Service at 1–800–877–8339.

**SUPPLEMENTARY INFORMATION:** The Department will submit the proposed information collection to OMB for review, as required by the Paperwork Reduction Act of 1995 (44 U.S.C. Chapter 35, as amended).

This Notice is soliciting comments from members of the public and affecting agencies concerning the proposed collection of information to: (1) Evaluate whether the proposed collection of information is necessary for the proper performance of the functions of the agency, including whether the information will have practical utility; (2) Evaluate the accuracy of the agency's estimate of the burden of theproposed collection of information; (3) Enhance the quality, utility, and clarity of the information to be collected; and (45) Minimize the burden of the collection of information on those who are to respond; including through the use of appropriate automated collection techniques or other forms of information technology, e.g., permitting electronic submission of responses.

This Notice also lists the following information:

*Title of Proposal:* Requirements for Notification of Lead-Based Paint Hazards in Federally-Owned Residential Properties and Housing Receiving Federal Assistance.

*OMB Control Number, if applicable:* 2539–0009.

*Description of the need for the information and proposed use:* Requirements for Notification of Lead-Based Paint Hazards in Federally-Owned Residential Properties and Housing Receiving Federal Assistance.

*Agency form numbers, if applicable:* None.

*Estimation of the total number of hours needed to prepare the information collection including number of respondents, frequency of response, and hours of response:* An estimation of the total numbers of hours needed to prepare the information collection is 252,778, number of respondents is 80,638, frequency of response is ''on occasion,'' and the hours per response is 3.1 hours.

*Status of the proposed information collection:* Extension of a currently approved collection.

**Authority:** Section 3506 of the Paperwork Reduction Act of 1995, 44 U.S.C. Chapter 35, as amended.

Dated: December 21, 2005.

**Warren Friedman,**

*Deputy Director, Office of Healthy Homes and Lead Hazard Control.*

[FR Doc. 05–24578 Filed 12–28–05; 8:45 am]

**BILLING CODE 4210–70–M**

---

## DEPARTMENT OF HOUSING AND URBAN DEVELOPMENT

**[Docket No. FR–4971–N–67]**

## Notice of Submission of Proposed Information Collection to OMB; HUD–FHA Title I/Title II Lender Approval, Annual Recertification, Noncompliance Forms, Reports, Ginnie Mae Issuer Approval, and Credit Watch Termination Reinstatement

**AGENCY:** Office of the Chief Information Officer, HUD.

**ACTION:** Notice.

**SUMMARY:** The proposed information collection requirement described below has been submitted to the Office of Management and Budget (OMB) for review, as required by the Paperwork Reduction Act. The Department is soliciting public comments on the subject proposal.

This information is required for approval of all FHA Title I lender and Title II mortgagees; issuers of Ginnie Mae mortgage-backed securities. Additional information is then required of all FHA approved Title I lenders and Title II mortgagees to: (1) Maintain their approval (annual Recertification); (2) add/delete branches; (3) pay additional fees to FHA for annual Recertification, new branches, and business conversions; (4) report business changes of lender or mortgagee including structure, addresses, and principal owners and officers; (5) report non-compliance detected by lender and mortgagee quality control plans; and (6) voluntarily terminate FHA approval.

**DATES:** *Comments Due Date:* January 30, 2006.

**ADDRESSES:** Interested persons are invited to submit comments regarding this proposal. Comments should refer to the proposal by name and/or OMB approval Number (2502–0302) and should be sent to: HUD Desk Officer, Office of Management and Budget, New Executive Office Building, Washington, DC 20503; fax: 202–395–6974.

**FOR FURTHER INFORMATION CONTACT:** Wayne Eddins, Reports Management Officer, AYO, Department of Housing and Urban Development, 451 Seventh Street, SW., Washington, DC 20410; e-mail *Wayne_Eddins@HUD.gov;* or Lillian Deitzer at *Lillian_L_Deitzer@HUD.gov* or telephone (202) 708–2374. This is not a toll-free number.

Copies of available documents submitted to OMB may be obtained from Mr. Eddins or Ms Deitzer.

**SUPPLEMENTARY INFORMATION:** This notice informs the public that the Department of Housing and Urban Development has submitted to OMB a request for approval of the information collection described below. This notice is soliciting comments from members of the public and affecting agencies concerning the proposed collection of information to: (1) Evaluate whether the proposed collection of information is necessary for the proper performance of the functions of the agency, including whether the information will have practical utility; (2) evaluate the accuracy of the agency's estimate of the burden of the proposed collection of information; (3) enhance the quality, utility, and clarity of the information to be collected; and (4) minimize the burden of the collection of information on those who are to respond; including through the use of appropriate automated collection techniques or other forms of information technology, e.g., permitting electronic submission of responses.

This notice also lists the following information:

*Title of Proposal:* HUD–FHA Title I/Title II Lender Approval, Annual Recertification, Noncompliance Forms, Reports, Ginnie Mae Issuer Approval, and Credit Watch Termination Reinstatement.

*OMB Approval Number:* 2502–0005.

*Form Numbers:* HUD–11710, HUD–11701–A, HUD–11701–B, HUD–11701–C, HUD–11710–D, HUD–11701–E, HUD–92001–B, and HUD–56005.

*Description of the Need for the Information and Its Proposed Use:* This information is required for approval of all FHA Title I lender and Title II mortgagees; issuers of Ginnie Mae mortgage-backed securities. Additional information is then required of all FHA approved Title I lenders and Title II mortgagees to: (1) Maintain their approval (annual Recertification); (2) add/delete branches; (3) pay additional fees to FHA for annual Recertification, new branches, and business conversions; (4) report business changes of lender or mortgagee including structure, addresses, and principal owners and officers; (5) report non-compliance detected by lender and mortgagee quality control plans; and (6) voluntarily terminate FHA approval.

*Frequency of Submission:* On occasion, Annually.

| | Number of respondents | Annual responses | × | Hours per response | = | Burden hours |
|---|---|---|---|---|---|---|
| Reporting Burden | 13,514 | 3.04 | | 0.69 | | 28,410 |

*Total Estimated Burden Hours:* 28,410.

*Status:* Revision of a currently approved collection.

**Authority:** Section 3507 of the Paperwork Reduction Act of 1995, 44 U.S.C. 35, as amended.

Dated: December 22, 2005.

**Wayne Eddins,**

*Departmental Paperwork Reduction Act Officer, Office of the Chief Information Officer.*

[FR Doc. E5–8046 Filed 12–28–05; 8:45 am]

**BILLING CODE 4210–72–P**

## DEPARTMENT OF HOUSING AND URBAN DEVELOPMENT

**[Docket No. FR–4978–N–09]**

### Notice of Proposed Information Collection for Public Comment; Management Operations Certification

**AGENCY:** Office of the Assistant Secretary for Public and Indian Housing, HUD.

**ACTION:** Notice.

**SUMMARY:** The proposed information collection requirement described below will be submitted to the Office of Management and Budget (OMB) for review, as required by the Paperwork Reduction Act. The Department is soliciting public comments on the subject proposal.

**DATES:** *Comments Due Date:* February 27, 2006.

**ADDRESSES:** Interested persons are invited to submit comments regarding this proposal. Comments should refer to the proposal by name/or OMB Control number and should be sent to: Aneita Waites, Reports Liaison Officer, Public and Indian Housing, Department of Housing and Urban Development, 451 7th Street, SW., Room 4116, Washington, DC 20410–5000.

**FOR FURTHER INFORMATION CONTACT:** Aneita Waites, (202) 708–0713, extension 4114, for copies of the proposed forms and other available documents. (This is not a toll-free number.)

**SUPPLEMENTARY INFORMATION:** The Department will submit the proposed information collection to OMB for review, as required by the Paperwork Reduction Act of 1995 (44 U.S.C. Chapter 35, as amended). This notice is soliciting comments from members of the public and affected agencies concerning the proposed collection of information to: (1) Evaluate whether the proposed collection of information is necessary for the proper performance of the functions of the agency, including whether the information will have practical utility; (2) evaluate the accuracy of the agency's estimate of the burden of the proposed collection of information; (3) enhance the quality, utility, and clarity of the information to be collected; and (4) minimize the burden of the collection of information on those who are to respond, including through the use of appropriate automated collection techniques or other forms of information technology; e.g., permitting electronic submission of responses.

This Notice also lists the following information:

*Title of Proposal:* Management Operations Certification.

*OMB Control Number:* 2507–0106.

*Description of the Need for the Information and Proposed Use:* To meet the requirements of the Public Housing Assessment System (PHAS) rule, the Department has developed the management operations template that public housing agencies (PHAs) use to annually submit electronically specific management information to HUD. HUD uses the management operations information it collects from each PHA to assist in the evaluation and assessment of the PHAs' overall condition. Requiring PHAs to report electronically has enabled HUD to provide a more comprehensive assessment of the PHAs receiving Federal funds from HUD.

*Agency Form Number, if Applicable:* Form HUD–50072.

*Members of Affected Public:* Public housing agencies.

*Estimation of the Total Number of Hours Needed to Prepare the Information Collection Including Number of Respondents:* The estimated number of respondents is 3,174 PHAs that submit one certification annually. The average number for each PHA response is 1.147 hours, for a total reporting burden of 3,643 hours.

*Status of the Proposed Information Collection:* Extension of a currently approved collection.

**Authority:** Section 3506 of the Paperwork Reduction Act of 1995, 44 U.S.C. Chapter 35, as amended.

Dated: December 21, 2005.

**Bessy Kong,**

*Deputy Assistant Director, Office of Policy, Program and Legislative Initiatives.*

[FR Doc. E5–8084 Filed 12–28–05; 8:45 am]

**BILLING CODE 4210–33–P**

## DEPARTMENT OF INTERIOR

### Fish and Wildlife Service

### Notice of Intent To Prepare a Comprehensive Conservation Plan and Environmental Assessment for Grand Bay National Wildlife Refuge in Jackson County, MS, and Mobile County, AL

**AGENCY:** Fish and Wildlife Service, Interior.

**ACTION:** Notice of intent.

**SUMMARY:** The Fish and Wildlife Service, Southeast Region, intends to gather information necessary to prepare a comprehensive conservation plan and environmental assessment pursuant to the National Environmental Policy Act of 1969 and its implementing regulations.

The National Wildlife Refuge System Administration Act of 1966, as amended by the National Wildlife Refuge System Improvement Act of 1997, requires the Service to develop a comprehensive conservation plan for each national

wildlife refuge. The purpose in developing a comprehensive conservation plan is to provide refuge managers with a 15-year strategy for achieving refuge purposes and contributing toward the mission of the National Wildlife Refuge System, consistent with sound principles of fish and wildlife management, conservation, legal mandates, and Service policies. In addition to outlining broad management direction on conserving wildlife and their habitats, plans identify wildlife-dependent recreational opportunities available to the public, including opportunities for hunting, fishing, wildlife observation, wildlife photography, and environmental education and interpretation.

The purpose of this notice is to achieve the following:

(1) Advise other agencies and the public of our intentions, and

(2) Obtain suggestions and information on the scope of issue to include in the environmental document.

**DATES:** An open house style meeting will be held during the scoping phase and public draft phase of the comprehensive conservation plan development process. Special mailings, newspaper articles, and other media announcements will be used to inform the public and state and local government agencies of the dates and opportunities for input throughout the planning process.

**ADDRESSES:** Comments and requests for more information regarding the Grand Bay National Wildlife Refuge planning process should be sent to: Mike Dawson, Refuge Planner, Fish and Wildlife Service, 6578 Dogwood View Parkway, Suite B, Jackson, Mississippi 39213; Telephone: 601/965–4903, ext. 20; Fax: 601/965–4010; Electronic mail: *mike_dawson@fws.gov* To ensure consideration, written comments must be received no later than February 13, 2005. Our practice is to make comments, including names and addresses of respondents, available for public review during regular business hours. Individual respondents may request that we withhold their home addresses from the record, which we will honor to the extent allowable by law.

**SUPPLEMENTARY INFORMATION:** Grand Bay National Wildlife Refuge was established in 1992 under the Emergency Wetlands Resources Act of 1986, to protect one of the largest expanses of undisturbed pine savanna habitats in the Gulf Coastal Plain region. It consists of 9,831 acres within an approved acquisition boundary of 17,741 acres. The refuge also manages 930 acres of Farm Service Agency tracts. The largest portion of the refuge consists of a mosaic of pine savannas, interspersed with poorly drained evergreen bays and pond cypress stands graduating to estuarine salt marshes to the south.

Recreation and education opportunities on the refuge include hunting photography , and wildlife observation. Approximately 2,500 people visit the refuge annually.

The Service will conduct a comprehensive conservation planning process that will provide opportunity for state and local governments, agencies, organizations, and the public to participate in issue scoping and public comment. Comments received by the planning team will be used as part of the planning process.

**Authority:** This notice is published under the authority of the National Wildlife Refuge System Improvement Act of 1997, Public Law 105–57.

Dated: October 27, 2005.

**Cynthia K. Dohner,**

*Acting Regional Director.*

[FR Doc. 05–24592 Filed 12–28–05; 8:45 am]

BILLING CODE 4310–55–M

## DEPARTMENT OF THE INTERIOR

### Fish and Wildlife Service

### Harvest and Export of American Ginseng

**AGENCY:** Fish and Wildlife Service, Interior.

**ACTION:** Notice: request for information from the public; announcement of public meetings.

**SUMMARY:** We, the U.S. Fish and Wildlife Service (Service), announce public meetings on American ginseng (*Panax quinquefolius*). These meetings will help us gather information from the public in preparation of our 2006 findings on the export of American ginseng roots, for the issuance of permits under the Convention on International Trade in Endangered Species of Wild Fauna and Flora (CITES).

**DATES:** The meeting dates are:

1. January 31, 2006, 2:30 p.m. to 6 p.m., Moon Township (Pittsburgh), PA.

2. February 10, 2006, 8 a.m. to 12 noon, Asheville, NC.

3. February 15, 2006, 8 a.m. to 12 noon, Indianapolis, IN.

**ADDRESSES:** The meeting locations are:

1. Moon Township (Pittsburgh)—DoubleTree Hotel, 8402 University Blvd., Moon Township, PA 15108; telephone number (412) 329–1400.

2. Asheville—Holiday Inn, 1450 Tunnel Road, Asheville, NC 28805; telephone number (828) 298–5611.

3. Indianapolis—Hampton Inn, Indianapolis Airport, 5601 Fortune Circle West, Indianapolis, IN 46241; telephone number (317) 244–1221.

**FOR FURTHER INFORMATION CONTACT:** For further information, or directions to meetings contact Ms. Pat Ford, Division of Scientific Authority, U.S. Fish and Wildlife Service, 4401 N. Fairfax Drive, Room 750, Arlington, VA 22203; 703–358–1708 (telephone), 703–358–2276 (fax), or *patricia_ford@fws.gov* (e-mail); or Ms. Anne St. John, Division of Management Authority, U.S. Fish and Wildlife Service, 4401 N. Fairfax Drive, Room 700, Arlington, VA 22203; 703–358–2095 (telephone), 703–358–2298 (fax), or *anne_stjohn@fws.gov* (e-mail).

**SUPPLEMENTARY INFORMATION:**

## Background

The Convention on International Trade in Endangered Species of Wild Fauna and Flora (CITES, or Convention) is an international treaty designed to control and regulate international trade in certain animal and plant species that are now or potentially may be threatened with extinction by international trade. Currently, 169 countries, including the United States, are Parties to CITES. The species for which trade is controlled are listed in Appendix I, II, or III of the Convention. Appendix I includes species threatened with extinction that are or may be affected by international trade. Commercial trade in Appendix-I species is prohibited. Appendix II includes species that, although not necessarily threatened with extinction at the present time, may become so unless their trade is strictly controlled through a system of export permits. Appendix II also includes species that CITES must regulate so that trade in other listed species may be brought under effective control (*i.e.*, because of similarity of appearance between listed species and other species). Appendix III comprises species subject to regulation within the jurisdiction of any CITES Party country that has requested the cooperation of the other Parties in regulating international trade in the species.

American ginseng (*Panax quinquefolius*) was listed in Appendix II of CITES on July 1, 1975. The Division of Scientific Authority and the Division of Management Authority of the Service regulate the export of American ginseng, including whole plants, whole roots, and root parts. To meet CITES requirements for export of American ginseng from the United States, the

Division of Scientific Authority must determine that the export will not be detrimental to the survival of the species, and the Division of Management Authority must be satisfied that the American ginseng roots to be exported were legally acquired.

Since the inclusion of American ginseng in CITES Appendix II, the Divisions of Scientific Authority and Management Authority have issued findings on a State by State basis. To determine whether or not to approve exports of American ginseng, the Division of Scientific Authority has annually reviewed available information from various sources (other Federal agencies, State regulatory agencies, industry and associations, nongovernmental organizations, and academic researchers) on the biology and trade status of the species. After a thorough review, the Division of Scientific Authority makes a non-detriment finding and the Division of Management Authority makes a legal acquisition finding on the export of American ginseng to be harvested during the year in question. From 1999 through 2004, the Division of Scientific Authority included in its non-detriment finding for the export of wild (including wild-simulated and woodsgrown) American ginseng roots an age-based restriction (*i.e.*, plants must be at least 5 years old). In 2005, the Division of Scientific Authority included in its non-detriment findings for the export of wild American ginseng roots an age-based restriction that plants must be at least 10 years old, and for the export of wild-simulated and woodsgrown American ginseng roots that plants must be at least 5 years old.

States with harvest programs for wild and/or artificially propagated American ginseng are: Alabama, Arkansas, Georgia, Idaho, Illinois, Indiana, Iowa, Kentucky, Maine, Maryland, Michigan, Minnesota, Missouri, New York, North Carolina, North Dakota, Ohio, Oregon, Pennsylvania, Tennessee, Vermont, Virginia, Washington, West Virginia, and Wisconsin.

The Divisions of Scientific Authority and Management Authority will host an American ginseng workshop from January 31 through February 2, 2006, in Moon Township, Pennsylvania, with representatives of State and Federal agencies that regulate the species, to discuss the status and management of American ginseng and the CITES export program for the species. This workshop will provide an important opportunity for representatives of the States and Federal agencies to discuss and consider improvements to the CITES export program for this species. Except for sessions on January 31 at this location, and the two public meetings on other dates in other locations (see Public Meetings), this meeting will be closed to the public.

Information from the 2006 U.S. Fish and Wildlife Service's American ginseng workshop will be available in April 2006 upon request from the Division of Scientific Authority or the Division of Management Authority (see **FOR FURTHER INFORMATION CONTACT**); a copy of the workshop report will also be available from our Web site at: *http://www.fws.gov/international/animals/ginindx/.html.*

**Public Meetings**

At the January 31, 2006, Moon Township (Pittsburgh) meeting, we invite the public to listen to academic and federal researchers present their current research on American ginseng from 8 a.m. to 12:30 p.m.; representatives of the American ginseng industry and other stakeholders will speak from 1:30 to 2:30. This will be the only meeting and location at which the public can hear these presentations. After the morning's presentations, from 2:30 p.m. to 6 p.m., we will hold an open public meeting (a listening session) to hear from people involved or interested in American ginseng harvest and trade. We are particularly interested in obtaining any current information on the status of American ginseng in the wild, or other pertinent information that would contribute to improve the CITES export program for this species. We will discuss the Federal regulatory framework for the export of American ginseng and how these regulations control the international trade of this species. We will also discuss the different CITES definitions as they are applied to American ginseng grown under different production systems and how these systems affect the export of American ginseng roots.

The two open public meetings that follow the January meeting, on February 10 and February 15, 2006 (in Asheville and Indianapolis, respectively—see **DATES** and **ADDRESSES**), will also be open public meetings to hear from people involved or interested in American ginseng harvest and trade.

You may get directions to the meeting locations from the Division of Scientific Authority or the Division of Management Authority (see **FOR FURTHER INFORMATION CONTACT** or **ADDRESSES**). Persons planning to attend the January 31, 2006 meeting who require interpretation for the hearing impaired must notify the Division of Scientific Authority by January 23, 2006; for the other two meetings, please notify the Division of Scientific Authority as soon as possible (see **FOR FURTHER INFORMATION CONTACT**).

*Author*

The primary author of this notice is Patricia Ford, the Division of Scientific Authority, U.S. Fish and Wildlife Service.

Dated: December 20, 2005.

**Marshall P. Jones, Jr.,**

*Acting Director, Fish and Wildlife Service.*

[FR Doc. E5–8014 Filed 12–28–05; 8:45 am]

**BILLING CODE 4310–55–P**

---

## DEPARTMENT OF THE INTERIOR

### Bureau of Indian Affairs

### Public Comment About Congressionally Mandated Study of Energy Rights-of-Way on Tribal Lands

**AGENCY:** Office of Indian Energy and Economic Development, Interior.

**ACTION:** Notice of request for public comment.

**SUMMARY:** Section 1813 of the Energy Policy Act of 2005 (Pub. L. 109–58) requires the Department of the Interior (DOI) and Department of Energy to provide Congress with a study regarding energy rights-of-way on tribal lands. The study is due to Congress by August 7, 2006. The Departments are interested in receiving comments from the public about how to proceed with implementing section 1813.

**DATES:** Comments are due on or before January 20, 2006.

**ADDRESSES:** Send written comments by regular mail to Attention: Section 1813 ROW Study, Office of Indian Energy and Economic Development, 1849 C St., NW., Mail Stop 2749–MIB, Washington, DC, 20240 or by e-mail to *IEED@bia.edu.*

**FOR FURTHER INFORMATION CONTACT:** Mr. Darryl Francois, Office of Indian Energy and Economic Development, 1849 C St., NW., Mail Stop 2749–MIB, Washington, DC, 20240. He can also be reached by telephone at (202) 219–0740 or by electronic mail at *darryl.francois@mms.gov.*

**SUPPLEMENTARY INFORMATION:** Section 1813 of the Energy Policy Act of 2005 (Pub. L. 109–58) requires the Secretaries of the Department of the Interior and the Department of Energy (Departments) to conduct a study of energy related rights-of-way on tribal lands. The Act requires that the study address four subjects:

1. An analysis of historical rates of compensation;

2. Recommendations for appropriate standards to determine fair and appropriate compensation;

3. An assessment of tribal self-determination and sovereignty interests implicated by applications for rights-of-way on tribal land; and

4. An analysis of relevant national energy transportation policies.

The Departments propose the following work plan to meet the specific requirements of the Act and meet the congressionally mandated deadline for submittal of the final report.

1. DOI and DOE plan to conduct a series of pre-scoping phone calls and meetings with selected tribal leaders, members of the energy industry, appropriate government entities and affected businesses and consumers to discuss the various aspects of the report called for by section 1813. Participants in this pre-scoping work group will be identified through suggestions tribal leaders, other prominent Indian groups, business associations, and government organizations. The outcome of these pre-scoping discussions will provide useful detail and direction for the subsequent stages of the work plan.

2. DOI and DOE propose to contract with a Department of Energy National Laboratory to prepare an analysis of historical rates of compensation for pipelines crossing Indian land (as specified in section 1813(b)(1)), using a case study approach. We plan to direct the analysts to solicit and collect data from the Bureau of Indian Affairs, Tribal Governments, the energy industry, and other appropriate sources (*e.g.*, the National Archives and Records Administration) for this analysis.

3. In February 2006, DOI and DOE plan to jointly conduct a 2-day nation-wide scoping meeting with presentations from all affected groups, soliciting input on the subjects of appropriate standards and procedures for determining fair and appropriate compensation, tribal self-determination and sovereignty interests, and relevant national energy transportation policies. At this meeting, we propose to establish several working groups to solicit and further develop information on each of these subjects.

4. Between February and May 2006, DOI and DOE plan to conduct up to two workshops for each of these working groups. We expect to draw extensively on the results of the groups' efforts in preparing the report to Congress.

5. In May 2006, DOI and DOE plan to prepare a draft report, send copies to the tribes, and publish a notice of availability in the **Federal Register**.

6. Between May 2006 and mid-July 2006, DOI and DOE plan to conduct three regional Tribal consultation meetings to present the draft report and to receive written and oral comments on the draft.

7. DOI and DOE will consider these comments in preparing a final report for delivery to Congress by August 7, 2006.

The Departments request public comment on proposed work plan in addition to any other areas of concern regarding the section 1813 study. We will accept comments until January 20, 2006.

If you want to provide comments, please send written comments by regular mail to Attention: Section 1813 ROW Study, Office of Indian Energy and Economic Development, 1849 C St., NW., Mail Stop 2749, Washington, DC, 20240 or by email to *IEED@bia.edu.*

Dated: December 22, 2005.

**Michael D. Olsen,**

*Principal Deputy Assistant Secretary—Indian Affairs.*

[FR Doc. E5–8068 Filed 12–28–05; 8:45 am]

BILLING CODE 4310–96–P

## DEPARTMENT OF THE INTERIOR

### Bureau of Land Management

**[AK960–1410–HY–P]**

### Alaska Native Claims Acreage Allocation

**AGENCY:** Bureau of Land Management, DOI.

**ACTION:** Notice of decision allocating additional acreage to regional corporations.

**SUMMARY:** As required by 43 CFR 2650.7(d), notice is hereby given that an appealable decision allocating additional acreage to Alaskan Native regional corporations will be issued to:

Ahtna, Inc., The Aleut Corporation, Bering Straits Native Corporation, Bristol Bay Native Corporation, Calista Corporation, Chugach Alaska Corporation, Cook Inlet Region, Inc., Doyon, Limited, Koniag, Inc., NANA Regional Corporation, Inc., and Sealaska Corporation.

Further information and a table showing the acreage computation are contained in the Supplementary Information portion of this notice. If there is an appeal that affects the allocation to any other region, then all other allocations are subject to administrative correction.

**DATES:** The time limits for filing an appeal are:

1. Any party claiming a property interest which is adversely affected by the decision shall have until January 30, 2006, to file an appeal.

2. Parties receiving service of the decision by certified mail shall have 30 days from the date of receipt to file an appeal.

Parties who do not file an appeal in accordance with the requirements of 43 CFR Part 4, Subpart E, shall be deemed to have waived their rights.

**ADDRESSES:** A copy of the decision may be obtained from: Bureau of Land Management, Alaska State Office, 222 West Seventh Avenue, #13, Anchorage, Alaska 99513–7599.

**FOR FURTHER INFORMATION CONTACT:** Linda Resseguie, by phone at 907–271–5422, or by e-mail at *Linda_Resseguie@ak.blm.gov*. Persons who use a telecommunication device (TTD) may call the Federal Information Relay Service (FIRS) on 1–800–877–8330, 24 hours a day, seven days a week, to contact Ms. Resseguie.

**SUPPLEMENTARY INFORMATION:** Section 205 of the Alaska Land Transfer Acceleration Act of December 10, 2004, Public Law 108–452, 118 Stat. 3585 (hereafter Sec. 205), amended Sec. 14(h)(8) of the Alaska Native Claims Settlement Act (ANCSA), 43 U.S.C. 1613(h)(8), by directing the Secretary of the Interior to allocate to the regional corporations an additional 200,000 acres of the 2 million acre pool established under Sec. 14(h) of ANCSA.

Each region's respective share of the 200,000 acres has been calculated using the final Sec. 14(h) percentiles published in the **Federal Register,** Vol. 42. No. 22, pages 6419 to 6432, February 2, 1977, and **Federal Register,** Vol. 43, No. 221, page 53062, November 15, 1978, subject to the specific limitations included in Sec. 205. The table below sets out the computations required by Sec. 205. Column 2 lists the final percentiles published in the **Federal Register;** column 3 shows each region's respective share of the 200,000 acres; and column 4 shows each region's revised total allocation under section 14(h)(8).

| Regional corporation | Percentage share | Share of 200,000-acre allocation | Total acres allocated under section 14(h)(8) |
|---|---|---|---|
| Ahtna | 1.41538 | 2,830.76 | 22,957.54 |
| Aleut | 4.36431 | 8,728.62 | 70,789.37 |
| Arctic Slope | 5.07850 | 10,157.00 | 82,373.57 |
| Bering Straits | 8.98443 | 17,968.86 | 145,727.99 |
| Bristol Bay | 7.17430 | 14,348.60 | 116,367.57 |
| Calista | 17.45725 | 34,914.50 | 283,157.64 |
| Chugach | 2.73467 | 5,469.34 | 44,356.51 |
| Cook Inlet | 8.15078 | 16,301.56 | * |
| Doyon | 12.00348 | 24,006.96 | 194,697.16 |
| Koniag | 4.40716 | 8,814.32 | * |
| NANA | 6.38041 | 12,760.82 | 103,490.63 |
| Sealaska | 21.84883 | 43,697.66 | 354,389.33 |

*Settled by legislation.

**Ramona Chinn,**

*Deputy State Director, Division of Conveyance Management.*

[FR Doc. E5–8027 Filed 12–28–05; 8:45 am]

**BILLING CODE 4310–$$–P**

## DEPARTMENT OF THE INTERIOR

### Bureau of Land Management

**[AK964–1410–HY–P; AA–6699–C, AA–6699–D, AA–6699–A2, AA–6699–B2, AA–6699–D2, AA–16169, AA–8101–1, AA–8101–5, AA–74400, and AA–76461, ALA–6]**

### Alaska Native Claims Selection

**AGENCY:** Bureau of Land Management, DOI.

**ACTION:** Notice of decision approving lands for conveyance.

**SUMMARY:** As required by 43 CFR 2650.7(d), notice is hereby given that an appealable decision approving lands for conveyance pursuant to the Alaska Native Claims Settlement Act will be issued to Shumagin Corporation. The lands are located in T. 51 S., R. 70 W., T. 52 S., R. 74 W., T. 53 S., R. 74 W., T. 53 S., R. 75 W., T. 52 S., R. 78 W., T. 54 S., R. 80 W., T. 50 S., R. 82 W., and T. 51 S., R. 83 W., Seward Meridian, Alaska, in the vicinity of Sand Point, Alaska, and contain approximately 24,626.58 acres. Notice of the decision will also be published four times in the Dutch Harbor Fisherman.

**DATES:** The time limits for filing an appeal are:

1. Any party claiming a property interest which is adversely affected by the decision shall have until January 30, 2006, to file an appeal.

2. Parties receiving service of the decision by certified mail shall have 30 days from the date of receipt to file an appeal.

Parties who do not file an appeal in accordance with the requirements of 43 CFR Part 4, Subpart E, shall be deemed to have waived their rights.

**ADDRESSES:** A copy of the decision may be obtained from: Bureau of Land Management, Alaska State Office, 222 West Seventh Avenue, #13, Anchorage, Alaska 99513–7599.

**FOR FURTHER INFORMATION CONTACT:** D. Kay Erben, by phone at (907) 271–4515, or by e-mail at *kay_erben@ak.blm.gov*. Persons who use a telecommunication device (TTD) may call the Federal Information Relay Service (FIRS) at 1–800–877–8330, 24 hours a day, seven days a week, to contact Mrs. D. Kay Erben.

**D. Kay Erben,**

*Land Law Examiner, Branch of Adjudication II.*

[FR Doc. E5–8026 Filed 12–28–05; 8:45 am]

**BILLING CODE 4310–$$–P**

## DEPARTMENT OF THE INTERIOR

### Bureau of Land Management

### Call for Nominations for the Bureau of Land Management's California Desert District Advisory Council

**SUMMARY:** The Bureau of Land Management's California Desert District is soliciting nominations from the public for five members of its District Advisory Council to serve the 2007–2009 three-year term. Council members provide advice and recommendations to BLM on the management of public lands in southern California. Nominations will be accepted through Wednesday, May 31, 2006. The three-year term would begin January 1, 2007.

The five positions to be filled include:

—One public-at-large
—One environmental protection
—One renewable resources (grazing interests)
—Two elected officials representing county government

The California Desert District Advisory Council is comprised of 15 private individuals who represent different interests and advise BLM officials on policies and programs concerning the management of 11.5 million acres of public land in southern California. The Council meets in formal session three to four times each year in various locations throughout the California Desert District. Council members serve without compensation except for reimbursement of travel expenditures incurred in the course of their duties. Members serve three-year terms and may be nominated for reappointment for an additional three-year term.

Section 309 of the Federal Land Policy and Management Act (FLPMA) directs the Secretary of the Interior to involve the public in planning and issues related to management of BLM administered lands. The Secretary also selects Council nominees consistent with the requirements of the Federal Advisory Committee Act (FACA), which requires nominees appointed to the Council be balanced in terms of points of view and representative of the various interests concerned with the management of the public lands.

The Council also is balanced geographically, and BLM will try to find qualified representatives from areas throughout the California Desert District. The District covers portions of eight counties, and includes 10.4 million acres of public land in the California Desert Conservation Area and 300,000 acres of scattered parcels in San Diego, western Riverside, western San Bernardino, Orange, and Los Angeles Counties (known as the South Coast).

Any group or individual may nominate a qualified person, based upon their education, training, and knowledge of BLM, the California Desert, and the issues involving BLM-administered public lands throughout

southern California. Qualified individuals also may nominate themselves.

Nominations must include the name of the nominee; work and home addresses and telephone numbers; a biographical sketch that includes the nominee's work and public service record; any applicable outside interests or other information that demonstrates the nominees qualifications for the position; and the specific category of interest in which the nominee is best qualified to offer advice and council. Nominees may contact the BLM California Desert District External Affairs staff at (909) 697–5220 or write to the address below and request a copy of the nomination form.

All nominations must be accompanied by letters of reference from represented interests, organizations, members of the public, or elected officials supporting the nomination. Individuals nominating themselves must provide at least one letter of recommendation. Advisory Council members are appointed by the Secretary of the Interior, generally in late December or early January.

Nominations should be sent to the District Manager, Bureau of Land Management, California Desert District Office, 22835 Calle San Juan De Los Lagos, Moreno Valley, California 92553.

**FOR FURTHER INFORMATION CONTACT:** Mr. Doran Sanchez, BLM California Desert District External Affairs (951) 697–5220.

Dated: November 3, 2005.

**Robert D. Roudabush,**

*Acting District Manager.*

[FR Doc. E5–8029 Filed 12–28–05; 8:45 am]

**BILLING CODE 4310–40–P**

---

## DEPARTMENT OF THE INTERIOR

### Bureau of Land Management

**[ID 320 7122 EO 7979]**

## DEPARTMENT OF AGRICULTURE

### Forest Service

### Notice of Availability of Draft Environmental Impact Statement (DEIS) for the Smoky Canyon Mine, Panels F and G

**AGENCIES:** DOI Bureau of Land Management, Lead Agency; USDA Forest Service, Co-lead Agency; and the Idaho Department of Environmental Quality, Cooperating Agency.

**ACTION:** Notice of Availability of the Draft Environmental Impact Statement for the Smoky Canyon Mine, Panels F and G mine Expansion Project.

**SUMMARY:** In accordance with the National Environmental Policy Act of 1969 (NEPA, 102(2) (C)) and the Federal Land Policy and Management Act of 1976, the USDOI Bureau of Land Management (Lead Agency) and the USDA Forest Service (Co-lead Agency) announce the availability of the DEIS for the Smoky Canyon Mine, Panels F and G mine expansion.

**DATES:** The DEIS is now available for public review. Written and electronic comments regarding the DEIS should be submitted within 60 days of the date of publication of the EPA's Notice in the **Federal Register**. Public meetings are currently scheduled at the following locations at the following times:

Bureau of Land Management, 4350 Cliffs Drive, Pocatello, Idaho 83204; January 17, 2006; 7 p.m.

Soda Springs, City Hall, 9 West 2nd South, Soda Springs, Idaho 83276; January 18, 2006; 7:30 p.m.

Star Valley High School, 445 West Swift Creek Lane, Afton, Wyoming 83110; January 19, 2006; 7 p.m.

These dates may be subject to change. Final dates will be announced in local newspapers two weeks prior. Dates can also be confirmed by contacting the BLM or CTNF as shown below.

**ADDRESSES:** In addition to a mass mailing, the DEIS will be available at the Bureau of Land Management, Pocatello Field Office, 4350 Cliffs Drive, Pocatello, Idaho 83204, phone (208) 478–6340 and the Caribou-Targhee National Forest, Soda Springs Ranger District, 410 E. Hooper Ave, Soda Springs, Idaho 83276, phone (208) 547–4356. It will also be available on the BLM Web site at *http://www.id.blm.gov/planning/scmdeis.*

Written comments can be sent to: Smoky Canyon Mine DEIS, C/O The Shipley Group, P.O. Box 2000, Bountiful, UT 84011–2000.

Electronic comments can be sent to: *scm_deis@contentanalysisgroup.com.*

The BLM and FS give reviewers notice that comments should be structured so that they are meaningful and alert the agencies to a reviewer's position and contentions. It is very important that those interested in this proposed action participate by the close of the 60-day comment period for the DEIS so that substantive comments and objections are available to the BLM and FS to meaningfully consider them and respond to them in the final EIS.

Individual respondents may request confidentiality for comments submitted. If you wish to withhold your name or street address from public review or from disclosure under the Freedom of Information Act, you must state this prominently at the beginning of your written comment. Such requests will be honored to the extent allowed by law. All submissions from organizations and businesses, and from individuals identifying themselves as representatives or officials of organizations or businesses, will be available for public inspection in their entirety.

**FOR FURTHER INFORMATION CONTACT:** Bill Stout, Bureau of Land Management, phone (208) 478–6340; or Scott Gerwe, Caribou-Targhee National Forest, phone (208) 547–4356.

**SUPPLEMENTARY INFORMATION:** The following information is provided as a convenient synopsis for the public. However, this synopsis is not a substitute for review of the complete DEIS. Commenters should review and consider the complete DEIS in providing comments regarding the proposed action. If there are any inconsistencies between this posting and the DEIS, the DEIS controls.

The DEIS was prepared to assess the impacts of implementing a mine expansion at Smoky Canyon Mine, thus, disclosing those impacts to the public and agency decision makers.

The proposed extension of mining operations, in Panels F and G, lies within the Caribou-Targhee National Forest, on surface administered by the FS and on Federal phosphate leases administered by the BLM under authority of the Mineral Leasing Act of 1920. Mining, as proposed, would take place on two Federal phosphate leases; I–27512 and I–01441 including a lease modification (enlargement) of I–27512. These leases are adjacent to the existing mine and were previously issued to Simplot by competitive bid in January of 2001 and October of 1950 respectively. The proposed action includes the construction of two pits, Panels F and G, and a haul road to transport ore and employees between the pits and existing facilities. Mining would take place over an estimated 14 year period, with an additional two years to complete final reclamation. The environmental impacts of the proposed action, six mining alternatives, one no-mining alternative, and eight transportation alternatives are analyzed in the DEIS. Where necessary, site specific mitigation measures have been developed.

The BLM Idaho State Director, or delegated official, will make a decision regarding approval of the proposed Mine & Reclamation Plan and the proposed lease modifications. Decisions will be informed by the EIS and any recommendations the FS may have

regarding surface management of leased National Forest System lands. The Caribou-Targhee National Forest Supervisor makes recommendations to the BLM concerning surface management and mitigation on leased lands within the Caribou-Targhee National Forest. For this proposal, the Forest Supervisor will make a decision whether to authorize off-lease facilities such as roads and power lines.

As a cooperating agency, the IDEQ has provided assistance and recommendations on aspects of the project pertaining to water quality and on water quality rules under their jurisdiction.

The agency Preferred Alternative would approve mining both leases described as Panel F and Panel G. The preferred mining alternative would be Alternative B—No External Seleniferous Overburden Fills. BLM would approve the proposed lease modifications. Based on analysis of surface and ground water impacts in Chapter 4, BLM would require construction of an infiltration barrier over seleniferous backfill, Alternative D. A Forest Service decision would approve power line placement on poles along the haul road, Alternative E, eliminating a separate power corridor. The transportation route between Panel F and existing mine would be constructed according to the Proposed Action. The preferred transportation route between Panel G and the existing mine is Alternative 2—East Haul/Access Road.

The proposed Mine & Reclamation Plan was submitted by J. R Simplot Company in April 2003. The proposed action consists of two open pits (Panel F on Federal phosphate lease I–27512 and Panel G on Federal phosphate lease I–01441), topsoil stockpiles, mine equipment parking and service areas, access and haul roads, a power line extension from the existing Smoky Canyon facilities, permanent external overburden storage areas, and runoff/sediment control facilities, electrical substation, warehouse and storage areas, repair shop, restrooms, fuel and lubricant storage. A new haul/access road to transport ore to the existing Smoky Canyon mill is proposed to be constructed from the south end of the existing Panel E approximately 2.5 miles to the proposed Panel F. As operations move south to Panel G, another haul road is proposed to transport ore 7.8 miles from Panel G north to Panel F. Much of these activities are proposed to occur within the Sage Creek Inventoried Roadless Area.

Ore would be hauled in trucks to the existing Smoky Canyon mill facility to be concentrated. Ore concentrate from the mill would be transported to the existing Simplot fertilizer plant in Pocatello, Idaho via the existing slurry pipeline. Mill tailings would continue to be deposited in the currently approved and permitted tailings disposal facility.

Initially, overburden generated from Panel F would be trucked to the existing Panel E open pit and used as backfill. Remaining overburden from Panel F would then be placed as part of a 38-acre external fill and then as backfill in Panel F as soon as practical. Overburden generated from mining Panel G would be permanently placed in 138 acres of external fills at Panel G as well as backfill in the Panel G open pit.

Disturbed lands directly resulting from the proposed activities would total 1,340 acres. Ninety-five percent of the project disturbance would be fully reclaimed. This would leave unreclaimed a total of 71 acres of highwall, road cuts in steep terrain, pit bottoms not filled to contour, and mine roads left as replacements to existing Forest Service roads. New pits would disturb approximately 763 acres, roads would disturb about 284 acres, external overburden fills would cover 176 acres and there would be 117 acres of disturbance for other mine features such as runoff management facilities, water monitoring, a power line corridor and topsoil piles.

Reclamation of mining disturbances would include: Removal of facilities and equipment, backfilling pits, regrading slopes, restoring drainages, covering seleniferous fills with at least 4 feet of chert material, spreading 1 to 3 feet of topsoil, stabilizing surfaces, revegetation, testing and treatment for any remaining hydrocarbon contaminants, and environmental monitoring.

Simplot has applied for a lease modification to expand Federal Phosphate Lease I–27512 for the Panel F operations. The application includes a 120-acre tract to recover ore and construct a road from Panel E on the northern edge of the lease and a larger 400 acre tract on the southern edge of the lease to recover ore. Subsequent to BLM's and Forest Service's preparation of the DEIS, Simplot has also applied for a lease modification to I–01441 to accommodate 18 acres of off-lease external overburden fill. The environmental impacts of mining operations within the lease modifications are analyzed in this EIS. BLM will review the applications, under the Mineral Leasing Act, and inform the public in accordance with the requirements of NEPA prior to any decision on these applications.

**Alternatives**

Issues were identified for the proposed mining of F and G panels by the agencies and by the public during the scoping process. They include potential effects on: ground water, surface water, geology and minerals, air quality and noise, soils, vegetation, wetlands, wildlife, fisheries and aquatic life, livestock grazing, recreation, Inventoried Roadless Areas, socio-economics, visual resources, cultural resources, and Tribal Treaty Rights. Alternatives to the proposed action were developed to address issues.

The EIS analyzes the environmental and human effects of the Proposed Action, six different mining alternatives, one no-action alternative, and eight different transportation alternatives. Mining alternatives include mining without one or any lease modifications, no external seleniferous overburden fills, no external overburden fills at all, construction of an infiltration barrier over seleniferous material, constructing the power line only within proposed disturbance, and using generators in Panel G instead of a power line. The transportation alternatives include one variation on the haul road between Panel F and the existing Panel E, two variations of a haul road from Panel G located east of the project area, a more direct—middle—haul road from Panel G to Panel F, a variation of the proposed West Haul Road, and using a conveyor system to transport ore from Panel G to the existing mill. If the conveyor transportation alternative is chosen then one of two different variations on moving people and equipment between Panel G and the existing mine were analyzed.

Dated: December 8, 2005.

**Joe Kraayenbrink,**

*District Manager, Idaho Falls District, Bureau of Land Management.*

**Larry Timchak,**

*Forest Supervisor, Caribou-Targhee National Forest.*

[FR Doc. 05–24630 Filed 12–28–05; 8:45 am]

BILLING CODE 4310–GG–P

---

## DEPARTMENT OF THE INTERIOR

### Bureau of Land Management

**[WY–100–05–1310–DB]**

### Notice of Meeting of the Pinedale Anticline Working Group

**AGENCY:** Bureau of Land Management, Interior.

**ACTION:** Notice of public meeting.

**SUMMARY:** In accordance with the Federal Land Policy and Management Act (1976) and the Federal Advisory Committee Act (1972), the U.S. Department of the Interior, Bureau of Land Management (BLM) Pinedale Anticline Working Group (PAWG) will meet in Pinedale, Wyoming, for a business meeting. Group meetings are open to the public.

**DATES:** The PAWG will meet January 31, 2006, from 9 a.m. until 5 p.m.

**ADDRESSES:** The meeting of the PAWG will be held in the Lovatt room of the Pinedale Library, 155 S. Tyler Ave., Pinedale, WY.

**FOR FURTHER INFORMATION CONTACT:** Matt Anderson, BLM/PAWG Liaison, Bureau of Land Management, Pinedale Field Office, 432 E. Mills St., PO Box 738, Pinedale, WY, 82941; 307–367–5328.

**SUPPLEMENTARY INFORMATION:** The Pinedale Anticline Working Group (PAWG) was authorized and established with release of the Record of Decision (ROD) for the Pinedale Anticline Oil and Gas Exploration and Development Project on July 27, 2000. The PAWG advises the BLM on the development and implementation of monitoring plans and adaptive management decisions as development of the Pinedale Anticline Natural Gas Field proceeds for the life of the field.

The agenda for this meeting will include discussions concerning any modifications task groups may wish to make to their monitoring recommendations, a discussion on monitoring funding sources, and overall adaptive management implementation as it applies to the PAWG. At a minimum, public comments will be heard prior to lunch and adjournment of the meeting.

Dated: December 20, 2005.

**Priscilla Mecham,**

*Field Office Manager.*

[FR Doc. E5–8013 Filed 12–28–05; 8:45 am]

**BILLING CODE 4310–22–P**

## DEPARTMENT OF THE INTERIOR

## Bureau of Land Management

**[AZ–110–1430–ES; AZA–33001]**

## Notice of Realty Action; Recreation and Public Purposes (R&PP) Act Classification; Arizona

**AGENCY:** Bureau of Land Management (BLM), Interior.

**ACTION:** Notice.

**SUMMARY:** The public lands listed below, located in Mohave County, Arizona, near the community of Littlefield have been examined and found suitable for classification for lease or conveyance to the Virgin River Domestic Wastewater Improvement District (VRDWID) under provisions of the R&PP Act for use as a wastewater treatment facility.

**SUPPLEMENTARY INFORMATION:** The following public lands near the community of Littlefield, Mohave County, Arizona, have been examined and found suitable for classification for lease or conveyance to the VRDWID under the provisions of the R&PP Act, as amended (43 U.S.C. 869 *et seq.*):

**Gila and Salt River Meridian, Arizona**

T. 40 N., R. 15 W., sec. 19, N½NW¼, SW¼NW¼, NW¼NW¼SW¼.
T. 40 N., R. 16 W., sec. 24, E½NE¼, SW¼NE¼, E½SW¼, SE¼.

(Including only those BLM administered lands between the southern right-of-way of Highway 91 and the top edge of the bluff overlooking the Virgin River.)

Containing 190 acres, more or less.

The lands are not needed for Federal purposes. Lease or conveyance is consistent with current BLM land use planning and would be in the public interest.

The lease/patent, when issued, will be subject to the following terms, conditions, and reservations:

1. Provisions of the R&PP Act and to all applicable regulations of the Secretary of the Interior.

2. A right-of-way for ditches and canals constructed by the authority of the United States.

3. All minerals shall be reserved to the United States, together with the right to prospect for, mine, and remove the minerals.

4. Valid existing rights.

5. Terms and conditions identified through the site-specific environmental analysis.

6. Those rights for power line and telephone line purposes granted to Dixie Escalante Electric under right-of-way AZA–36027 and Rio Virgin Telephone Company under rights-of-way AZAR–035969, AZA–30814, and AZA–17642.

7. The lessee/patentee by entering into the lease or accepting a patent, agrees to indemnify, defend, and hold the United States harmless from any costs, damages, claims, causes of action, penalties, fines, liabilities, and judgments of any kind or nature arising out of, or in connection with the lessee's/patentee's use, occupancy, or operations on the leased/patented real property.

This indemnification and hold harmless agreement includes, but is not limited to, acts or omissions of the lessee/patentee and its employees, agents, contractors, lessees, or any third-party, arising out of or in connection with the lessee's/patentee's use, occupancy, or operations on the leased/patented real property which cause or give rise to, in whole or in part: (1) Violations of Federal, State, and local laws and regulations that are now, or may in the future become, applicable to the real property and/or applicable to the use, occupancy, and/or operations thereon; (2) Judgments, claims, or demands of any kind assessed against the United States; (3) Costs, expenses, or damages of any kind incurred by the United States; (4) Releases or threatened releases of solid or hazardous waste(s) and/or hazardous substances(s), pollutant(s) or contaminant(s), and/or petroleum product or derivative of a petroleum product, as defined by Federal and State environmental laws; off, on, into, or under land, property, and other interests of the United States; (5) Other activities by which solid or hazardous substance(s) or waste(s), pollutant(s) or contaminant(s), or petroleum product or derivative of a petroleum product as defined by Federal and State environmental laws are generated, stored, used, or otherwise disposed of on the leased/patented real property, and any cleanup response, remedial action, or other actions related in any manner to the said solid or hazardous substance(s) or waste(s), pollutant(s) or contaminant(s), or petroleum product or derivative of a petroleum product; (6) Natural resources damages as defined by Federal and State laws. Lessee/patentee shall stipulate that it will be solely responsible for compliance with all applicable Federal, State, and local environmental laws and regulatory provisions, throughout the life of the facility, including any closure and/or post-closure requirements that may be imposed with respect to any physical plant and/or facility upon the real property under any Federal, State, or local environmental laws or regulatory provisions. In the case of a lease being issued, upon termination of the lease, lessee agrees to remove, at the request of BLM, any physical plant and/or facilities or improvements and restore the site to a condition acceptable to the BLM authorized officer. In the case of a patent being issued, this covenant shall be construed as running with the patented real property and may be enforced by the United States in a court of competent jurisdiction.

8. Any other rights or reservations that the authorized officer deems

appropriate to ensure public access and proper management of the Federal lands and interest therein.

**ADDRESSES:** Detailed information concerning this action is available for review at the Office of the Bureau of Land Management, Arizona Strip District, 345 E. Riverside Drive, St. George, UT 84790.

**DATES:** Upon publication of this notice in the **Federal Register**, the lands will be segregated from all other forms of appropriation under the public land laws, including the general mining laws, except for lease or conveyance under the R&PP Act and leasing under the mineral leasing laws. For a period until February 13, 2006, interested persons may submit comments regarding the proposed lease/conveyance or classification of the lands to the District Manager, Arizona Strip District Office, 345 E. Riverside Drive, St. George, UT 84790.

*Classification Comments:* Interested parties may submit comments involving the suitability of the land for a wastewater treatment facility. Comments on the classification are restricted to whether the land is physically suited for the proposal, whether the use will maximize the future use or uses of the land, whether the use is consistent with local planning and zoning, or if the use is consistent with State and Federal programs.

*Application Comments:* Interested parties may submit comments regarding the specific use proposed in the application and plan of development, whether the BLM followed proper administrative procedures in reaching the decision, or any other factor not directly related to the suitability of the land for a wastewater treatment facility.

Any adverse comments will be reviewed by the State Director. In the absence of any adverse comments, the classification will become effective February 27, 2006.

**Scott R. Florence,**

*District Manager.*

[FR Doc. E5–8030 Filed 12–28–05; 8:45 am]

**BILLING CODE 4310–32–P**

---

## DEPARTMENT OF THE INTEROR

## Bureau of Land Management

**[NV–055–5853–EU]**

## Notice of Realty Action: Direct Sale of Public Lands in Clark County, NV, N–79693

**AGENCY:** Bureau of Land Management, Interior.

**ACTION:** Notice.

**SUMMARY:** The following described lands, aggregating approximately 5.0 acres, more or less, have been designated for disposal and will be offered as a direct sale of public lands within the City of Henderson in Clark County, Nevada, to M Holdings, LLC.

**DATES:** Comment regarding the proposed sale must be received by the Bureau of Land Management (BLM) on or before February 13, 2006.

**ADDRESSES:** Comments regarding the proposed sale should be addressed to: Field Manager, Las Vegas Field Office, Bureau of Land Management, 4701 N. Torrey Pines Drive, Las Vegas, Nevada 89103.

More detailed information regarding the proposed sale and the land involved may be reviewed during normal business hours (7:30 a.m. to 4:30 p.m.) at the Las Vegas Field Office (LVFO).

**FOR FURTHER INFORMATION CONTACT:** You may contact Judy Fry, Program Lead, Sales at (702) 515–5081 or by email at *jfry@.blm.gov.* You may also call (702) 515–5000 and ask to have your call directed to a member of the Sales Team.

**SUPPLEMENTARY INFORMATION:** The lands hereinafter described, consisting of 5.0 acres, more or less, have been authorized and designated for disposal under the Southern Nevada Public Land Management Act of 1998 (112 Stat. 3242), as amended by the Clark County Conservation of Public Land and Natural Resources Act of 2002 (116 Stat. 1994) (hereinafter ''SNPLMA''). The land will be offered noncompetitively as a direct sale in accordance with the applicable provisions of Sections 203 and 209 of the Federal Land Policy and Management Act (FLPMA) of 1976 (43 U.S.C. 1713 and 1719), respectively, its implementing regulations, and in accordance with 43 CFR 2710.0–2, at not less than the appraised Fair Market Value (FMV) of the parcel, which has been determined to be $5,010,000.00.

It is determined that the sale meets the criteria for disposal in FLPMA and the regulations at 43 CFR 2710.0–3 (a)(2) which states ''Disposal of such tract shall serve important public objectives, including but not limited to, expansion of communities and economic development, which cannot be achieved prudently or feasibly on lands other than public lands and which outweigh other objectives and values, including, but not limited to, recreation and scenic values, which would be served by maintaining such tract in Federal ownership; and, as stated in (a)(3) that ''Such tract, because of its location or other characteristics is difficult and uneconomic to manage as part of the management by another Federal department or agency.

43 CFR 2711.3–3 (a) states that ''Direct sales (without competition) may be utilized, when in the opinion of the authorized officer, a competitive sale is not appropriate and the public interest would best be served by a direct sale. Examples include, but are not limited to: (2) A tract identified for sale that is an integral part of a project of public importance and speculative bidding would jeopardize a timely completion and economic viability of the project; or (4) The adjoining ownership pattern and access indicate a direct sale is appropriate''.

The City of Henderson (City), Nevada, has proposed that the 5.0 acre parcel be sold to M Holdings, LLC (MHLLC) as an integral part of a public project of vital economic development importance. The City is further interested in addressing critical transportation needs adjacent to the St. Rose Parkway/Las Vegas Boulevard/Haven Road interchange and enhancing the ''gateway'' to the City. MHLLC has been cooperative with the City and as the landowner of record, on all four sides of the subject parcel. MHLLC has entered into appropriate transportation and access agreements as part of an overall redevelopment agreement for the surrounding land. Based upon a direct request from the City, MHLLC has agreed to donate approximately 3.0 acres of private land to the City for a new interchange, finance and construct a new intersection for Haven Street from St. Rose Parkway to Bicentennial Parkway, and pay for the light and associated improvements at the proposed intersection.

The City has proposed to the BLM that Federal lands immediately adjacent to the donated property be sold to MHLLC at fair market value to enable MHLLC to replace the donated land and avoid unduly diminishing the size and value of their aggregate property. The City of Henderson expressed specific concerns that speculative bidding on the federal parcel could prevent MHLLC from purchasing the replacement lands, thus stopping the donation and impairing the City's ability to complete the public project. The 3.0 acre donation from MHLLC to the City, which will be recorded in the County, is a term and condition of the FMV direct sale to MHLLC. In the opinion of the authorized officer, a direct sale to MHLLC best serves the public interest.

In this instance, MHLLC's ownership of adjacent parcels meets the regulatory adjoining ownership and access test as well. MHLLC owns parcels adjacent to the federal parcel on all sides and

controls access to the subject parcel from those points. The federal parcel is landlocked, without access, on all sides and overall redevelopment efforts being advanced by MHLLC are an integral part of a project of public importance. Speculative bidding on the subject parcel would serve no useful purpose other than to jeopardize timely completion and economic viability of the project. Finally, the City recognizes MHLLC could suffer a substantial economic loss if the tract were purchased by anyone other than MHLLC, which would ultimately result in substantial economic loss to the City as it relates to redevelopment plan for land surrounding the subject parcel.

The proposed sale is consistent with the BLM Las Vegas Resource Management Plan and would serve important public objectives which cannot be achieved prudently or feasibly elsewhere. The land contains no other known public values. The environmental assessment, map, and approved appraisal report covering the proposed sale are available for review at the BLM, Las Vegas Field Office, Las Vegas, Nevada (LVFO).

**Land Proposed for Sale**

Mount Diablo Meridian, Nevada

T. 23 S., R. 61 E.

Sect. 9, S½SE¼SW¼NW¼.

The lands described above contain 5.0 acres, more or less. Clark County APN No. 191–09–201–006.

When the parcel of land is sold, the locatable mineral interests therein will be sold simultaneously as part of the sale. The land identified for sale has no known locatable mineral value. Acceptance of the offer to purchase will constitute an application for conveyance of the locatable mineral interests. In conjunction with the final payment, the applicant will be required to pay a $50.00 non-refundable filing fee for processing the conveyance of the locatable mineral interest.

*Terms and Conditions of Sale:* The proposed offer for direct sale to MHLLC is contingent upon the City receiving beforehand the 3.0 acre donation from MHLLC on terms satisfactory to the City. The BLM sale parcel is subject to the following:

1. All discretionary leaseable and saleable mineral deposits are reserved; but, permittees, licensees, and lessees retain the right to prospect for, mine, and remove such minerals owned by the United States under applicable law and any regulations that the Secretary of the Interior may prescribe, including all necessary access and exit rights.

2. A right-of-way is reserved for ditches and canals constructed by authority of the United States under the Act of August 30, 1890 (43 U.S.C. 945).

3. The parcel is subject to valid existing rights. Parcels may also be subject to applications received prior to publication of this Notice if processing the application would have no adverse affect on the federally approved Fair Market Value (FMV).

4. The parcel is subject to reservations for road, public utilities and flood control purposes, both existing and proposed, in accordance with the local governing entities' Transportation Plans.

5. No warranty of any kind, express or implied, is given by the United States as to the title, physical condition or potential uses of the parcel of land proposed for sale, and the conveyance of any such parcel will not be on a contingency basis. However, to the extent required by law, all such parcels are subject to the requirements of section 120 (h) of the Comprehensive Environmental Response Compensation and Liability Act, as amended (CERCLA) (42 U.S.C. 9620)(h).

6. All purchasers/patentees, by accepting a patent, agree to indemnify, defend, and hold the United States harmless from any cost, damages, claims, causes of action, penalties, fines, liabilities, and judgments of any kind or nature arising from the past, present, and future acts or omissions of the patentee or their employees, agents, contractors, or lessees, or any third-party , arising out of or in connection with the patentee's use, occupancy, or operations on the patented real property. This indemnification and hold harmless agreement includes, but is not limited to, acts and omissions of the patentee and their employees, agents, contractors, or lessees, or any third party, arising out of or in connection with the use and/or occupancy of the patented real property which has already resulted or does hereafter result in; (1) Violations of Federal, State, and local laws and regulations that are now or may in the future become, applicable to the real property; (2) Judgments, claims or demands of any kind assessed against the United States; (3) Cost, expenses, or damages of any kind incurred by the United States; (4) Other releases or threatened releases of solid or hazardous waste(s) and/or hazardous substance(s), as defined by federal or state environmental laws; off, on, into or under land, property and other interests of the United States; (5) Other activities by which solids or hazardous substances or wastes, as defined by federal and state environmental laws are generated, released, stored, used or otherwise disposed of on the patented real property, and any cleanup response, remedial action or other actions related in any manner to said solid or hazardous substances or wastes; or (6) Natural resource damages as defined by federal and state law. This covenant shall be construed as running with patented real property and may be enforced by the United States in a court of competent jurisdiction.

7. Maps delineating the individual proposed sale parcel are available for public review at the BLM LVFO along with the appraisal.

8. Upon acceptance of the offer to purchase, MHLLC will submit 20% of the FMV to Bureau of Land Management (BLM), Las Vegas Field Office, 4701 North Torrey Pines Drive, Las Vegas, NV, 89103. On or prior to the expiration of 180 days following payment of the required deposit, MHLLC will remit the balance of the FMV to BLM in the form of a certified check, money order, bank draft or cashier's check made payable to the order of the Bureau of Land Management.

9. The BLM may accept or reject any or all offers, or withdraw any parcel of land or interest therein from sale, if, in the opinion of the authorized officer, consummation of the sale would not be fully consistent with FLPMA or other applicable laws or are determined to not be in the public interest. If not sold, any parcel described above in this Notice may be identified for sale at a later date without further legal notice.

10. Federal law requires bidders to be U.S. citizens 18 years of age or older; a corporation subject to the laws of any State or of the United States; a State, State instrumentality, or political subdivision authorized to hold property, or an entity including, but not limited to, associations or partnerships capable of holding property or interest therein under the laws of the State of Nevada. Certification of qualification, including citizenship or corporation or partnership, must accompany the bid deposit.

*Additional Information:* In order to determine the value, through appraisal, of the parcel of land proposed to be sold, certain extraordinary assumptions may have been made of the attributes and limitations of the land and potential effects of local regulations and policies on potential future land uses. Through publication of this NORA, the BLM gives notice that these assumptions may not be endorsed or approved by units of local government. It is the buyer's responsibility to be aware of all applicable local government policies, laws, and regulations that would affect the subject lands, including any required dedication of lands for public uses. It is also the buyer's responsibility

to be aware of existing or projected use of nearby properties. When conveyed out of federal ownership, the lands will be subject to any applicable reviews and approvals by the respective unit of local government for proposed future uses, and any such reviews and approvals will be the responsibility of the buyer. Any land lacking access from a public road or highway will be conveyed as such, and future access acquisition will be the responsibility of the buyer.

*Public Comments:* The BLM Field Manager, Las Vegas Field Office, 4701 North Torrey Pines Drive, Las Vegas, Nevada 89103 will receive the comments of the general public and interested parties up to 45 days after publication of this Notice in the **Federal Register**. Any adverse comments will be reviewed by the State Director, who may sustain, vacate, or modify this realty action in whole or in part. In the absence of any adverse comments this realty action will become the final determination of the Department of the Interior. Any comments received during this process, as well as the commentor's name and address, will be available to the public in the administrative record and/or pursuant to a Freedom of Information Act request. You may indicate for the record that you do not wish to have your name and/or address made available to the public. Any determination by the BLM to release or withhold the names and/or addresses of those who comment will be made on a case-by case basis. A request from a commentor to have their name and/or address withheld from public release will be honored to the extent permissible by law.

**Authority:** 43 CFR 2711.1–2.

Dated: October 26, 2005.

**Angie Lara,**

*Associate Field Manager.*

[FR Doc. E5–8024 Filed 12–28–05; 8:45 am]

**BILLING CODE 4310–HC–P**

---

## DEPARTMENT OF THE INTERIOR

### Bureau of Land Management

**[UT–020–1220–MA]**

### Final Supplementary Rules on Public Lands Within the Knolls Special Recreation Management Area Managed by the Salt Lake Field Office, Utah

**AGENCY:** Bureau of Land Management, Interior.

**ACTION:** Notice of final supplementary rules.

**SUMMARY:** In accordance with the Knolls Recreation Area Management Plan, the Bureau of Land Management (BLM), Salt Lake Field Office is issuing final supplementary rules. The BLM has determined that these rules are necessary to enhance the safety of visitors, protect natural resources, improve recreation opportunities, and protect public health.

**DATES:** The rules are effective January 30, 2006.

**ADDRESSES:** You may send inquiries or suggestions to the Bureau of Land Management, Salt Lake Field Office, 2370 S. 2300 W. Salt Lake City, Utah 84119, or via Internet email to: *Mail_UT–Salt_Lake@ut.blm.gov.*

**FOR FURTHER INFORMATION CONTACT:** Mandy Rigby, Outdoor Recreation Planner, 2370 S. 2300 W. Salt Lake City, Utah 84119, 801–977–4300. Persons who use a telecommunications device for the deaf (TDD) may contact this individual by calling the Federal Information Relay Service (FIRS) at (800) 877–8339, 24 hours a day, 7 days a week.

**SUPPLEMENTARY INFORMATION:**

### I. Background

The BLM is establishing these final supplementary rules under the authority of 43 CFR 8365.1–6. BLM is issuing these supplementary rules because of health and safety concerns due to current off-highway vehicle use within the Knolls Special Recreation Management Area (SRMA). A significant increase in visitation has occurred within the SRMA, which has led to numerous safety concerns including, but not limited to: glass and campfire remains left in sand dune areas, use of dangerous motorcycle jumps, and excessive motor vehicle speed on maintained roads.

### II. Discussion of Comments

These supplementary rules were published as interim final supplementary rules on September 2, 2005, in the **Federal Register** (70 FR 52440–52443). Comments were solicited in that publication until November 1, 2005, and could be submitted by mail, electronic means, or by telephone. The Salt Lake Field Office received two comments, for which responses are given below. We made no changes as a result of these comments to the supplementary rules.

One comment requested that target shooting be allowed in predefined areas within the Knolls SRMA. An emergency closure to target shooting has been in effect within the Knolls SRMA since July 2000 to protect the safety of visitors. Knolls has been designated as a Special Recreation Management Area for off-highway vehicle (OHV) use and it was determined that the high amount of OHV use and target shooting are not compatible. Target shooting is still allowed on over 96 percent of lands managed by the BLM Salt Lake Field Office.

The second comment questioned the purpose of the fire pan requirement. Because of the high use that is occurring and will increase at Knolls, we determined that requiring the use of fire pans will help prevent the degradation of the natural appearance of the area due to the proliferation of rock fire rings, fire debris, and blackening of the soil. This allows for the continued use of campfires while maintaining and protecting natural resources for all visitors to enjoy. For groups who desire to build a fire that would go beyond the limits of a fire pan, a permit system has been developed to authorize such use on a case-by-case basis.

### III. Procedural Matters

*Executive Order 12866, Regulatory Planning and Review*

These supplementary rules are not a significant regulatory action and are not subject to review by the Office of Management and Budget under Executive Order 12866. These supplementary rules will not have an effect of $100 million or more on the economy. They are not intended to affect commercial activity, but contain rules of conduct for public use of a certain recreational area. They will not adversely affect, in a material way, the economy, productivity, competition, jobs, the environment, public health or safety, or State, local, or Tribal governments or communities. They will not create a serious inconsistency or otherwise interfere with an action taken or planned by another agency. These supplementary rules do not alter the budgetary effects of entitlements, grants, user fees, or loan programs or the right or obligations of their recipients; nor do they raise novel legal or policy issues. They merely impose certain rules on recreational activities on a limited portion of the public lands in Utah in order to protect human health, safety, and the environment.

*National Environmental Policy Act*

BLM has prepared an environmental assessment (EA) and has found that these supplementary rules would not constitute a major Federal action significantly affecting the quality of the human environment under section 102(2)(C) of the National Environmental Policy Act of 1969 (NEPA), 42 U.S.C. 4332(2)(C). These supplementary rules

merely contain rules of conduct for the Knolls SRMA. These rules are designed to protect the environment and the public health and safety. A detailed statement under NEPA is not required. BLM has placed the EA and the Finding of No Significant Impact (FONSI) on file in the BLM Administrative Record at the address specified in the **ADDRESSES** section.

*Regulatory Flexibility Act*

Congress enacted the Regulatory Flexibility Act (RFA) of 1980, as amended, 5 U.S.C. 601–612, to ensure that Government regulations do not unnecessarily or disproportionately burden small entities. The RFA requires a regulatory flexibility analysis if a rule would have a significant economic impact, either detrimental or beneficial, on a substantial number of small entities. These supplementary rules do not pertain specifically to commercial or governmental entities of any size, but to public recreational use of specific public lands. Therefore, BLM has determined under the RFA that these supplementary rules would not have a significant economic impact on a substantial number of small entities.

*Small Business Regulatory Enforcement Fairness Act (SBREFA)*

These supplementary rules do not constitute a ''major rule'' as defined at 5 U.S.C. 804(2). They merely contain rules of conduct for recreational use of certain public lands. They have no effect on business, commercial, or industrial use of the public lands.

*Unfunded Mandates Reform Act*

These supplementary rules do not impose an unfunded mandate on State, local, or Tribal governments or the private sector of more than $100 million per year; nor do they have a significant or unique effect on State, local, or Tribal governments or the private sector. They merely impose reasonable restrictions on recreational activities on certain public lands to protect natural resources and human health and safety. Therefore, BLM is not required to prepare a statement containing the information required by the Unfunded Mandates Reform Act (2 U.S.C. 1531 *et seq.*).

*Executive Order 12630, Governmental Actions and Interference With Constitutionally Protected Property Rights (Takings)*

These supplementary rules do not represent a government action capable of interfering with Constitutionally protected property rights. They do not address property rights in any form, and do not cause the impairment of anybody's property rights. Therefore, the Department of the Interior has determined that these rules will not cause a taking of private property or require further discussion of takings implications under this Executive Order.

*Executive Order 13132, Federalism*

These supplementary rules will not have a substantial direct effect on the states, on the relationship between the national government and the states, or on the distribution of power and responsibilities among the various levels of government. They affect land in only one state, Utah, and do not address jurisdictional issues involving the state government. These supplementary rules do not come into conflict with any state law or regulation. Therefore, in accordance with Executive Order 13132, BLM has determined that these supplementary rules do not have sufficient Federalism implications to warrant preparation of a Federalism Assessment.

*Executive Order 12988, Civil Justice Reform*

Under Executive Order 12988, the Office of the Solicitor has determined that these supplementary rules will not unduly burden the judicial system and that they meet the requirements of sections 3(a) and 3(b)(2) of the Order. The supplementary rules impose prohibited acts, but they are straightforward and not confusing, and their enforcement should not unreasonably burden the United States Magistrate who will try any persons cited for violating them.

*Executive Order 13175, Consultation and Coordination With Indian Tribal Governments*

In accordance with Executive Order 13175, we have found that these supplementary rules do not include policies that have Tribal implications. They do not affect lands held for the benefit of Indians, Aleuts, or Eskimos.

*Paperwork Reduction Act*

These supplementary rules do not contain information collection requirements that the Office of Management and Budget must approve under the Paperwork Reduction Act, 44 U.S.C. 3501 *et seq.*

**Author**

The principal author of these supplementary rules is Mandy Rigby, Outdoor Recreation Planner, Salt Lake Field Office, Bureau of Land Management.

**Final Supplementary Rules for the Knolls Special Recreation Management Area.**

*Sec. 1 Definitions*

*Knolls Special Recreation Management Area (SRMA).* The Knolls SRMA encompasses public lands located in:

T. 1 S., R. 12 W., SLM, Secs. 19–23 south of the railroad grade, and 26–35.
T. 2 S., R. 12 W., SLM, Secs. 2–11, and 14–18.
T. 1 S., R. 13 W., SLM, Secs. 19–24 south of the railroad grade, and 25–36.
T. 2 S., R. 13 W., SLM, Secs. 1–18.

*Off-highway vehicle.* Any motorized vehicle capable of, or designed for, travel on or immediately over land, water, or other natural terrain, excluding:

(1) Any nonamphibious registered motorboat;

(2) Any military, fire, emergency, or law enforcement vehicle being used for emergency purposes;

(3) Any vehicle whose use is expressly authorized by the authorized officer, or otherwise officially approved;

(4) Vehicles in official use; and

(5) Any combat or combat support vehicle when used in times of national defense emergencies.

*Primary vehicle:* A street legal vehicle used for transportation to the recreation site.

*Dangerous weapon(s):* Any weapon that in the manner of its use, or intended use, is capable of causing death or serious bodily injury.

*Sec. 2 Prohibited Acts*

The following supplementary rules will apply to public lands within the Knolls Special Recreation Management Area (SRMA):

a. You must not discharge or use firearms or other dangerous weapons for the purposes of target shooting. This does not include the discharge of firearms or dangerous weapons while person(s) are engaged in bona fide hunting activities during established hunting seasons and are properly licensed for these activities.

b. You must not use or possess to use any glass containers outside of enclosed vehicles, camp trailers, or tents.

c. You must not use or possess to use as firewood any materials containing nails, screws, or other metal hardware, including, but not limited to, wood pallets and/or construction debris.

d. You must not use an accelerant for the purposes of igniting a campfire. However, you may ignite any campfire or other material used for cooking purposes, by using any commercially purchased charcoal igniter or other non-hazardous fuels.

e. You must not drive a motor vehicle through any campfire, or through any flaming debris or other flaming material(s).

f. You must not burn any potentially hazardous material including, but not limited to, gasoline, oil, plastic, and magnesium.

g. You must not ignite a campfire outside the confines of a fire pan or other container. All ashes and unburned fuel from campfires may be disposed of in a small pit excavated with hand tools as long as the material being disposed of is mostly ash. You must not dispose of non-flammable materials in a fire on public lands. BLM may authorize large bonfires, which would go beyond the limit of a fire pan, by permit on a case-by-case basis.

h. You must not operate a motorized vehicle in excess of the posted speed limit on any maintained roadway within the SRMA.

i. You must not operate a motorized vehicle in excess of 15 m.p.h. off of established or maintained roadways within 50 feet of any animals, people, or vehicles.

j. You must not operate or use any audio device, including, but not limited to, a radio, television, musical instrument, other noise producing device, or motorized equipment between the hours of 10 p.m. and 6 a.m. in a manner that makes unreasonable noise that disturbs other visitors.

k. You must not operate an off-highway vehicle without a properly installed spark arrestor.

l. You must not use or possess any man-made ramp or jump, for the purposes of performing acrobatic or aerial stunts.

m. You must not enter, camp, park, or stay longer than one half hour within the SRMA without properly paying required permit fees. Permits must be purchased and visibly displayed in the windshield of all primary vehicles with the date side facing out.

n. You must not camp or use motorized vehicles within 200 feet of any perennial water source or impoundment.

*Sec. 3 Penalties*

Any person who violates any of these supplementary rules may be tried before a United States Magistrate and fined no more than $1,000 or imprisoned for no more than 12 months, or both. 43 U.S.C. 1733(a); 43 CFR 8360.0–7. Such violations may also be subject to the enhanced fines provided for by 18 U.S.C. 3571.

Dated: November 18, 2005.

**Gene R. Terland,**

*Acting State Director.*

[FR Doc. E5–8023 Filed 12–28–05; 8:45 am]

BILLING CODE 4310–DK–P

## DEPARTMENT OF THE INTERIOR

### Bureau of Land Management

**[WY–957–05–1320–BJ]**

### Notice of Filing of Plats of Survey, Wyoming

**AGENCY:** Bureau of Land Management, Interior.

**SUMMARY:** The Bureau of Land Management (BLM) has filed the plats of survey of the lands described below in the BLM Wyoming State Office, Cheyenne, Wyoming, on December 16, 2005.

**FOR FURTHER INFORMATION CONTACT:** Bureau of Land Management, 5353 Yellowstone Road, P.O. Box 1828, Cheyenne, Wyoming 82003.

**SUPPLEMENTARY INFORMATION:** These surveys were executed at the request of the Bureau of Land Management, and are necessary for the management of resources. The lands surveyed are:

The plat representing the dependent resurvey of a portion of the subdivisional lines, and the subdivision of section 8, Township 20 North, Range 109 West, Sixth Principal Meridian, Wyoming, was accepted December 16, 2005.

The plat representing the dependent resurvey of a portion of the west boundary, a portion of the subdivisional lines and the subdivision of section 19, Township 33 North, Range 106 West, Sixth Principal Meridian, Wyoming, was accepted December 16, 2005.

The plat representing the dependent resurvey of a portion of the east boundary, a portion of the subdivisional lines and the subdivision of section 25, Township 32 North, Range 100 West, Sixth Principal Meridian, Wyoming, was accepted December 16, 2005.

The plat representing the dependent resurvey of a portion of the subdivisional lines and the subdivision of section 15, Township 40 North, Range 94 West, Sixth Principal Meridian, Wyoming, was accepted December 16, 2005.

Copies of the preceding described plats and field notes are available to the public at a cost of $1.10 per page.

Dated: December 21, 2005.

**John P. Lee,**

*Chief Cadastral Surveyor, Division of Support Services.*

[FR Doc. E5–8025 Filed 12–28–05; 8:45 am]

BILLING CODE 4310–22–P

## DEPARTMENT OF JUSTICE

### Notice of Lodging of Consent Decree Under the Comprehensive Environmental Response, Compensation and Liability Act

In accordance with 28 U.S.C. 50.7 and Section 122 of the Comprehensive Environmental Response, Compensation and Liability Act (''CERCLA''), 42 U.S.C. 9622, notice is hereby given that on November 18, 2005, a proposed Consent Decree in *United States* v. *Cambridge-Lee Industries, LLC, et al.,* Civil Action No. 2:05–cv–5482 (WJM), was lodged with the United States District Court for the District of New Jersey.

In this action the United States, on behalf of the U.S. Environmental Protection Agency (''EPA''), seeks reimbursement of certain response costs incurred and to be incurred in connection with response actions at the Pittsburgh Metal and Equipment Site (the ''Site''), located in Jersey City, Hudson County, New Jersey. The Complaint alleges that defendants Cambridge-Lee Industries, LLC, Clarke American Checks Inc., Deluxe Corporation, Cookson America, Inc., Fry's Metals, Inc., Olin Corporation, John H. Harland Company, and Metallix, Inc., are liable under Section 107(a) of CERCLA, 42 U.S.C. 9607(a). Pursuant to the Consent Decree, the defendants will reimburse the plaintiff United States certain response costs incurred by the plaintiff in remediating the Site.

The Department of Justice will receive for a period of thirty (30) days from the date of this publication comments relating to the Consent Decree. Comments should be addressed to the Assistant Attorney General, Environment and Natural Resources Division, U.S. Department of Justice, Washington, DC 20530, and should refer to *United States* v. *Cambridge-Lee Industries, LLC, et al.,* D.J. Ref. 90–11–3–06710/2.

The Consent Decree may be examined at the Office of the United States Attorney for the District of New Jersey, 970 Broad Street, Room 400, Newark, New Jersey 07102, and at the office of EPA Region II, 290 Broadway, New York, New York 10007. During the public comment period, the Consent Decree may also be examined on the

following Department of Justice Web site: *http://www.usdoj.gov/enrd/open.html.* A copy of the Consent Decree may also be obtained by mail from the Consent Decree Library, P.O. Box 7611, U.S. Department of Justice, Washington, DC 20044–7611, or by faxing or e-mailing a request a Tonia Fleetwood (*tonia.fleetwood@usdoj.gov*), fax no. (202) 514–0097, phone confirmation number (202) 513–1547. In requesting a copy from the Consent Decree Library, please enclose a check in the amount of $6.25 (25 cents per page reproduction cost), payable to the U.S. Treasury.

**Ronald Gluck,**

*Assistant Section Chief, Environmental Enforcement Section, Environment and Natural Resources Division.*

[FR Doc. 05–24617 Filed 12–28–05; 8:45 am]

BILLING CODE 4410–15–M

## DEPARTMENT OF JUSTICE

### Notice of Proposed Agreement Resolving Dispute Under Consent Decree in United States v. Detroit Diesel Corporation

Notice is hereby given of a proposed Agreement Resolving Dispute Under Consent Decree (''Agreement'') in the case of *United States* v. *Detroit Diesel Corporation,* Civil Action No. 98–02548, in the United States District Court for the District of Columbia.

The Agreement resolves two matters involving DDC's alleged failure to comply with a 1999 Consent Decree settling claims under Title II of the Clean Air Act, 42 U.S.C. 7521 *et seq.* (the ''Act''), regarding the alleged use of illegal emission-control ''defeat devices'' on DDC's 1998 and prior heavy-duty diesel engines (''HDDEs''). The first matter concerns DDC's use of a computer-based auxiliary emission control device (''AECD'') to control ''white smoke,'' *i.e.,* visible exhaust caused by incomplete combustion of diesel fuel, on 35,667 model year 2000 Series 50 urban bus engines and model year 2001 Series 60 HDDEs. The white smoke AECD, which required EPA approval, was not accurately described in DDC's applications to EPA for regulatory ''certificates of conformity'' permitting the sale of the engines in the United States. The second matter concerns 2,096 model year 2003 and 2004 Series 50 urban bus engines that, under specific engine operating conditions, may emit particulate matter (''PM'') at levels higher than the ''not-to-exceed'' or ''NTE'' limit for PM imposed by the Consent Decree.

These violations are addressed through DDC's payment of stipulated penalties in the amount of $535,000, provisions for the completion of previously initiated recalls to fix the white smoke AECD and the NTE exceedance engines until at least 24,967 of the former and all of the latter have been repaired, and the mandatory continuation of a program to obtain $NO_X$ emission reductions through modifications to the engine control software (known as ''early Low $NO_X$ Rebuild'' from older, higher emitting engines manufactured by DDC and still in use in trucks. DDC is required to achieve at least 8,000 tons of $NO_X$ emission reductions through early Low $NO_X$ Rebuilds, and is also required to continue this program beyond the 8,000-ton requirement for so long as engines for which its Low $NO_X$ Rebuild software is available remain in service.

The Department of Justice will receive for a period of thirty (30) days from the date of this publication comments relating to the Agreement. Comments should be addressed to the Assistant Attorney General, Environment and Natural Resources Divisions, P.O. Box 7611, U.S. Department of Justice, Washington, DC 20044–7611, and should refer to *United States* v. *Detroit Diesel Corporation,* D.J. Ref. 90–5–2–1–2253.

During the public comment period, the Agreement may be examined on the following Department of Justice Web site, *http://www.usdoj.gov/enrd/open.html.*

A copy of the Agreement may also be obtained by mail from the Consent Decree Library, P.O. Box 7611, U.S. Department of Justice, Washington, DC, 20044–7611 or by faxing or e-mailing a request to Tonia Fleetwood (*tonia.fleetwood@usdoj.gov*), fax no. (202) 514–0097, phone confirmation number (202) 514–1547. In requesting a copy of the Decree from the Consent Decree Library, please enclose a check in the amount of $4.25 (25 cents per page reproduction cost for 210 pages) payable to the U.S. Treasury.

**Karen Dworkin,**

*Assistant Chief, Environmental Enforcement Section.*

[FR Doc. 05–24616 Filed 12–28–05; 8:45 am]

BILLING CODE 4410–15–M

## DEPARTMENT OF JUSTICE

### Drug Enforcement Administration

### Manufacturer of Controlled Substances Notice of Registration

By Notice dated June 8, 2005, and published in the **Federal Register** on June 15, 2005, (70 FR 34796), Boehringer Ingelheim Chemical Inc., 2820 N. Normandy Drive, Petersburg, Virginia 23805, made application by renewal to the Drug Enforcement Administration (DEA) to be registered as a bulk manufacturer of the basic classes of controlled substances listed in Schedules II:

| Drug | Schedule |
|---|---|
| Amphetamine (1100) | II |
| Methylphenidate (1724) | II |
| Methadone (9250) | II |
| Methadone Intermediate (9254) | II |
| Dextropropoxyphene, bulk (non-dosage forms) (9273). | II |
| Fentanyl (9801) | II |

The company plans to manufacture the listed controlled substances for formulation into finished pharmaceuticals. Subsequent to the Notice of Application, being published in the **Federal Register** on June 15, 2005, Boehringer Ingelheim Chemical Inc., requested the surrender of drug code Levo-alphacetylmethadol (9648) from their registration.

No comments or objections have been received. DEA has considered the factors in 21 U.S.C. 823(a) and determined that the registration of Boehringer Ingelheim Chemical Inc. to manufacture the listed basic classes of controlled substances is consistent with the public interest at this time. DEA has investigated Boehringer Ingelheim Chemical Inc., to ensure that the company's registration is consistent with the public interest. The investigation has included inspection and testing of the company's physical security systems, verification of the company's compliance with state and local laws, and a review of the company's background and history. Therefore, pursuant to 21 U.S.C. 823, and in accordance with 21 CFR 1301.33, the above named company is granted registration as a bulk manufacturer of the basic classes of controlled substances listed.

Dated: November 18, 2005.

**Joseph T. Rannazzisi,**

*Acting Deputy Assistant Administrator, Office of Diversion Control, Drug Enforcement Administration.*

[FR Doc. E5–8082 Filed 12–28–05; 8:45 am]

BILLING CODE 4410–09–P

## DEPARTMENT OF LABOR

### Employment Standards Administration

### Proposed Collection; Comment Request

**ACTION:** Notice.

**SUMMARY:** The Department of Labor, as part of its continuing effort to reduce paperwork and respondent burden, conducts a preclearance consultation program to provide the general public and Federal agencies with an opportunity to comment on proposed and/or continuing collections of information in accordance with the Paperwork Reduction Act of 1995 (PRA95) [44 U.S.C. 3506(c)(2)(A)]. This program helps to ensure that requested data can be provided in the desired format, reporting burden (time and financial resources) is minimized, collection instruments are clearly understood, and the impact of collection requirements on respondents can be properly assessed. Currently, the Employment Standards Administration is soliciting comments concerning the proposed collection: Employment of Apprentices, Messengers and Learners (Including Student-Learners and Student-Workers), Forms WH–205 and WH–209. A copy of the proposed information collection request can be obtained by contacting the office listed below in the addresses section of this Notice.

**DATES:** Written comments must be submitted to the office listed in the **ADDRESSES** section below on or before February 27, 2006.

**ADDRESSES:** Ms. Hazel M. Bell, U.S. Department of Labor, 200 Constitution Ave., NW., Room S–3201, Washington, DC 20210; telephone: (202) 693–0418; fax: (202) 693–1451; e-mail: *bell.hazel@dol.gov.* Please use only one method of transmission for comments (mail, fax, or e-mail).

**SUPPLEMENTARY INFORMATION**

### I. Background

Fair Labor Standards Act (FLSA) 14(a) requires that the Secretary of Labor, to the extent necessary to prevent curtailment of employment opportunities, provide by regulations or orders for the employment of categories of workers who, under special certificates, may be paid less than the statutory minimum wage. This section also authorizes the Secretary to set limitations on such employment as to time, number, proportion and length of service. These workers include apprentices, messengers and learners, including student-learners and student-workers. Regulations found at 29 CFR Part 520 contain the provisions that implement the FLSA 14(a) requirements. Form WH–205 is the application an employer uses to obtain a certificate to employ student-learners at wages lower than the general federal minimum wage. Form WH–209 is the application an employer uses to request a certificate authorizing the employer to employ learners and/or messengers at subminimum wage rates. There is no application form that employers complete to obtain authority from DOL to employ apprentices at subminimum wages. This information collection is currently approved for use through July 31, 2006.

### II. Review Focus

The Department of Labor is particularly interested in comments which:

- Evaluate whether the proposed collection of information is necessary for the proper performance of the functions of the agency, including whether the information will have practical utility;
- Evaluate the accuracy of the agency's estimate of the burden of the proposed collection of information, including the validity of the methodology and assumptions used;
- Enhance the quality, utility and clarity of the information to be collected; and
- Minimize the burden of the collection of information on those who are to respond, including through the use of appropriate automated, electronic, mechanical, or other technological collection techniques or other forms of information technology, e.g., permitting electronic submissions of responses.

### III. Current Actions

The Wage and Hour Division seeks the approval of the extension of this information collection to obtain wage data in order to determine current prevailing wage rates in the various localities throughout the country.

*Type of Review:* Extension.

*Agency:* Employment Standards Administration.

*Title:* Employment of Apprentices, Messengers and Learners (Including Student-Learners and Student-Workers).

*OMB Number:* 1215–0192.

*Agency Number:* WH–205 and WH–209.

*Affected Public:* Business or other for-profit; Not-for-profit institutions; State, Local or Tribal Government.

*Total Respondents:* 929.

*Total Annual Responses:* 929.

*Type of Response:* Recordkeeping; Reporting and Third-Party Disclosure.

*Estimated Time per Response:* 30 minutes.

*Estimated Total Burden Hours:* 465.

*Frequency:* Annually.

*Total Burden Cost (capital/startup):* $0.

*Total Burden Cost (operating/maintenance):* $371.60.

Comments submitted in response to this notice will be summarized and/or included in the request for Office of Management and Budget approval of the information collection request; they will also become a matter of public record.

Dated: December 22, 2005.

**Sue Blumenthal,**

*Acting Chief, Branch of Management Review and Internal Control, Division of Financial Management, Office of Management, Administration and Planning, Employment Standards Administration.*

[FR Doc. E5–8015 Filed 12–28–05; 8:45 am]

BILLING CODE 4510–27–P

## DEPARTMENT OF LABOR

### Bureau of Labor Statistics

### Labor Research Advisory Council; Notice of Reestablishment

The Secretary of Labor has determined that reestablishment of the Labor Research Advisory Council to the Bureau of Labor Statistics (LRAC) is necessary and in the public interest in connection with the performance of duties imposed upon the Commissioner of Labor Statistics by 29 U.S.C. 1,2,3,4,5,6,7,8, and 9. The purpose of the Council is to advise the Commissioner of Labor Statistics with respect to technical issues arising out of the statistical work of the Bureau, and provide perspectives on Bureau programs in relation to the information needs of the American workforce, the organized labor community, and organizations or institutions with a demonstrated interest in accurate, timely, and relevant economic measures from the perspective of American workers.

The determination that the reestablishment is necessary and in the public interest follows consultation with the Committee Management Secretariat, General Services Administration.

The Council's charter will be filed under the Act fifteen days from the date of this publication.

*Name of Committee:* Labor Research Advisory Council.

*Membership:* The number of members will be reduced to 35 to enhance the working and management of the committee. The LRAC membership has

also been broadened. Committee members, who will be nominated by the Commissioner of Labor Statistics and appointed by the Secretary of Labor, may be from organized labor, academia, research, and other organizations or institutions with a demonstrated interest in economic measures from the perspective of American workers.

*Duration:* Continuing.

*Agency Contact:* William Parks, 202–691–5900.

Signed at Washington, DC, this 22nd day of December, 2005.

**Elaine L. Chao,**

*Secretary of Labor.*

[FR Doc. E5–8016 Filed 12–28–05; 8:45 am]

**BILLING CODE 4510–24–P**

## NATIONAL ARCHIVES AND RECORDS ADMINISTRATION

### Records Schedules; Availability and Request for Comments

**AGENCY:** National Archives and Records Administration (NARA).

**ACTION:** Notice of availability of proposed records schedules; request for comments.

**SUMMARY:** The National Archives and Records Administration (NARA) publishes notice at least once monthly of certain Federal agency requests for records disposition authority (records schedules). Once approved by NARA, records schedules provide mandatory instructions on what happens to records when no longer needed for current Government business. They authorize the preservation of records of continuing value in the National Archives of the United States and the destruction, after a specified period, of records lacking administrative, legal, research, or other value. Notice is published for records schedules in which agencies propose to destroy records not previously authorized for disposal or reduce the retention period of records already authorized for disposal. NARA invites public comments on such records schedules, as required by 44 U.S.C. 3303a(a).

**DATES:** Requests for copies must be received in writing on or before February 13, 2006. Once the appraisal of the records is completed, NARA will send a copy of the schedule. NARA staff usually prepare appraisal memorandums that contain additional information concerning the records covered by a proposed schedule. These, too, may be requested and will be provided once the appraisal is completed. Requesters will be given 30 days to submit comments.

**ADDRESSES:** You may request a copy of any records schedule identified in this notice by contacting the Life Cycle Management Division (NWML) using one of the following means (Note the new address for requesting schedules using e-mail):

*Mail:* NARA (NWML), 8601 Adelphi Road, College Park, MD 20740–6001.

*E-mail: requestschedule@nara.gov.*

*FAX:* 301–837–3698.

Requesters must cite the control number, which appears in parentheses after the name of the agency which submitted the schedule, and must provide a mailing address. Those who desire appraisal reports should so indicate in their request.

**FOR FURTHER INFORMATION CONTACT:** Laurence Brewer, Director, Life Cycle Management Division (NWML), National Archives and Records Administration, 8601 Adelphi Road, College Park, MD 20740–6001. Telephone: 301–837–1539. E-mail: *records.mgt@nara.gov.*

**SUPPLEMENTARY INFORMATION:** Each year Federal agencies create billions of records on paper, film, magnetic tape, and other media. To control this accumulation, agency records managers prepare schedules proposing retention periods for records and submit these schedules for NARA's approval, using the Standard Form (SF) 115, Request for Records Disposition Authority. These schedules provide for the timely transfer into the National Archives of historically valuable records and authorize the disposal of all other records after the agency no longer needs them to conduct its business. Some schedules are comprehensive and cover all the records of an agency or one of its major subdivisions. Most schedules, however, cover records of only one office or program or a few series of records. Many of these update previously approved schedules, and some include records proposed as permanent.

No Federal records are authorized for destruction without the approval of the Archivist of the United States. This approval is granted only after a thorough consideration of their administrative use by the agency of origin, the rights of the Government and of private persons directly affected by the Government's activities, and whether or not they have historical or other value.

Besides identifying the Federal agencies and any subdivisions requesting disposition authority, this public notice lists the organizational unit(s) accumulating the records or indicates agency-wide applicability in the case of schedules that cover records that may be accumulated throughout an agency. This notice provides the control number assigned to each schedule, the total number of schedule items, and the number of temporary items (the records proposed for destruction). It also includes a brief description of the temporary records. The records schedule itself contains a full description of the records at the file unit level as well as their disposition. If NARA staff has prepared an appraisal memorandum for the schedule, it too includes information about the records. Further information about the disposition process is available on request.

**Schedules Pending (Note the New Address for Requesting Schedules Using E-Mail)**

1. Department of Defense, Defense Logistics Agency (N1–361–05–3, 2 items, 2 temporary items). An agency-wide schedule that consists of records used in preparing press releases for distribution to hometown newspapers and broadcast stations concerning the activities and accomplishments of agency personnel. Also included are electronic copies of records created using electronic mail and word processing.

2. Department of Health and Human Services, Centers for Disease Control and Prevention (N1–442–05–3, 2 items, 2 temporary items). Electronic copies of records created using electronic mail and word processing relating to or associated with administrative and support services, research projects, training, the National Center for Health Statistics, the Office on Safety and Health, and agency automated information systems. Recordkeeping copies of these files are covered by previously approved disposition authorities.

3. Department of Health and Human Services, Centers for Medicare and Medicaid Services, (N1–440–04–3, 4 items, 4 temporary items). Inputs, data, documentation, and electronic mail and word processing copies associated with an electronic information system used to process Medicare claims. This schedule authorizes the agency to apply the proposed disposition instructions to any recordkeeping medium.

4. Department of Health and Human Services, Food and Drug Administration (N1–88–06–1, 8 items, 8 temporary items). Program management files, and inputs, outputs, master files, and electronic mail and word processing copies associated with an electronic information system used to monitor institutional compliance with

mammography quality standards. This schedule authorizes the agency to apply the proposed disposition instructions to any recordkeeping medium.

5. Department of Homeland Security, Transportation Security Administration (N1–560–04–9, 4 items, 4 temporary items). Records of the Office of Model Workplace Program. Included are such records as agendas, evaluations, and other materials for workshops and conferences, and mediation case files relating to non-EEO complaints. Also included are electronic copies of records created using electronic mail and word processing.

6. Department of Homeland Security, Transportation Security Administration (N1–560–05–1, 16 items, 11 temporary items). Records of the Office of Transportation Security Operations Center. Included are working copies of incident management guidance, documentation of training and analytical exercises, watch logs, and incident reports, voice and video recordings of a routine nature. Also included are electronic copies of records created using electronic mail and word processing. Proposed for permanent retention are recordkeeping copies of incident management plans, major incident reports, and voice and video recordings relating to an investigation or major incident.

7. Department of Homeland Security, Transportation Security Administration (N1–560–06–2, 6 items, 6 temporary items). Inputs, outputs, master files, system documentation, and electronic mail and word processing copies associated with an electronic information system used to schedule Federal air marshals on commercial airline flights.

8. Department of Homeland Security, Transportation Security Administration (N1–560–06–3, 6 items, 6 temporary items). Inputs, outputs, master files, system documentation, and electronic mail and word processing copies associated with an electronic information system used to maintain personnel data on Federal Air Marshal Service employees.

9. Department of Homeland Security, U.S. Citizenship and Immigration Service (N1–563–04–6, 7 items, 4 temporary items). Inputs, outputs, and electronic mail and word processing copies associated with an electronic information system used to manage the applications of individuals seeking affirmative asylum in the United States. Proposed for permanent retention are the recordkeeping copies of the system master files and documentation.

10. Department of Homeland Security, U.S. Citizenship and Immigration Service (N1–563–04–7, 7 items, 4 temporary items). Inputs, outputs, and electronic mail and word processing copies associated with an electronic information system used to manage the applications of individuals seeking defensive asylum in the United States. Proposed for permanent retention are the recordkeeping copies of the system master files and documentation.

11. Department of Homeland Security, U.S. Coast Guard (N1–26–05–7, 3 items, 3 temporary items). Law enforcement chronological files consisting of copies of outgoing correspondence, whale safety broadcasts, fishery management reports, and law enforcement taskings. Also included are electronic copies of records created using electronic mail and word processing.

12. Department of Homeland Security, U.S. Coast Guard (N1–26–05–13, 7 items, 7 temporary items). Records relating to the registration of undocumented vessels. Included are such records as registration applications and an associated electronic tracking system, annual State boating registration statistics, and pre-2001 bills of sale and an electronic tracking system for undocumented vessels in Alaska. Also included are electronic copies of records created using electronic mail and word processing.

13. Department of Homeland Security, U.S. Coast Guard (N1–26–05–17, 3 items, 3 temporary items). Shipping documents for sensitive conventional arms, ammunition, explosives, and classified items. Included are such records as shipping orders, bills of lading, and manifests. Also included are electronic copies of records created using electronic mail and word processing.

14. Department of Homeland Security, U.S. Coast Guard (N1–26–05–18, 3 items, 3 temporary items). Individual employee hazardous materials training records, including training dates and descriptions, test results, certifications of completion, and other related information. Also included are electronic copies of records created using electronic mail and word processing.

15. Small Business Administration, Agency-wide (N1–309–04–8, 5 items, 5 temporary items). Master files, outputs, documentation, and electronic mail and word processing copies associated with a web site used by businesses, Federal agencies, and others to post subcontracting opportunities, solicitations, and related notices.

16. Small Business Administration, Office of the Chief Financial Officer (N1–309–05–15, 4 items, 4 temporary items). Inputs, outputs, master files, and documentation associated with an electronic information system used by the Denver Finance Center to reconcile and report cash activity.

17. James Madison Memorial Fellowship Foundation (N1–220–06–2, 6 items, 5 temporary items). Approved and unsuccessful fellowship applications, and related administrative files. Also included are electronic copies of records created using electronic mail and word processing. Proposed for permanent retention are recordkeeping copies of the records of the Board of Trustees, including meeting minutes, reports, briefing books, publications, and organization establishment records.

Dated: December 21, 2005.

**Michael J. Kurtz,**

*Assistant Archivist for Records Services—Washington, DC.*

[FR Doc. E5–7996 Filed 12–28–05; 8:45 am]

BILLING CODE 7515–01–P

## NATIONAL ENDOWMENT FOR THE HUMANITIES

### Committee Management; Notice of Renewal

The Chairman of the National Endowment for the Humanities has determined that the renewal of the Humanities advisory panel is necessary and in the public interest in connection with the performance of duties imposed upon the Chairman, National Endowment for the Humanities (NEH), by (Pub. L. 92–463) and section 10(a)(4) of the National Foundation on the Arts and the Humanities Act of 1965, as amended (20 U.S.C. 959(a)(4)). This determination follows consultation with the Committee Management Secretariat, General Services Administration.

*Name of Committee:* Humanities Panel.

*Purpose and Objective:* For the purpose of advising the National Council on the Humanities and the Chairman of the NEH concerning policies, programs, and procedures of the Endowment. The Panel furthermore makes recommendations on applications for financial support presented to the National Endowment for the Humanities.

*Balanced Membership Plans:* In order to ensure a thorough and expert review of proposals which require an in-depth knowledge on the part of panelists, the Endowment is concerned in the selection of panel members about their scholarly and intellectual qualities, and that panelists should represent a wide and balanced perspective which can

best be achieved by the appointment of highly qualified individuals representing different segments of our society. By statute this panel is required to have broad geographic and culturally diverse representation

*Duration:* Continuing.

*Responsible NEH Official:* Mr. Michael P. McDonald, General Counsel, National Endowment for the Humanities, 1100 Pennsylvania Avenue, NW, Room 529, Washington, DC 20506, telephone (202) 606–8322.

Dated: December 20, 2005.

**Michael P. McDonald,**

*Committee Management Officer.*

[FR Doc. E5–8012 Filed 12–28–05; 8:45 am]

**BILLING CODE 7536–01–P**

## NATIONAL SCIENCE FOUNDATION

### Agency Information Collection Activities: Comment Request

**AGENCY:** National Science Foundation.

**ACTION:** Submission for OMB Review; Comment Request.

**SUMMARY:** The National Science Foundation (NSF) has submitted the following information collection requirements to OMB for review and clearance under the Paperwork Reduction Act of 1995, Public Law 104–13. Comments regarding (a) whether the collection of information is necessary for the proper performance of the functions of the agency, including whether the information will have practical utility; (b) the accuracy of the agency's estimate of burden including the validity of the methodology and assumptions used; (c) ways to enhance the quality, utility and clarity of the information to be collected; (d) ways to minimize the burden of the collection of information on those who are to respond, including through the use of appropriate automated, electronic, mechanical, or other technological collection techniques or other forms of information technology should be addressed to: Office of Information and Regulatory Affairs of OMB, Attention: Desk Officer for National Science Foundation, 725 17th Street, NW., Room 10235, Washington, DC 20503, and to Suzanne H. Plimpton, Reports Clearance Officer, National Science Foundation, 4201 Wilson Boulevard, Suite 295, Arlington, Virginia 22230 or send e-mail to *splimpto@nsf.gov.* Comments regarding these information collections are best assured of having their full effect if received within 30 days of this notification. Copies of the submission(s) may be obtained by calling 703–292–7556.

NSF may not conduct or sponsor a collection of information unless the collection of information displays a currently valid OMB control number and the agency informs potential persons who are to respond to the collection of information that such persons are not required to respond to the collection of information unless it displays a currently valid OMB control number.

**SUPPLEMENTARY INFORMATION:**

*Title:* Survey of Doctorate Recipients.

*OMB Control Number:* 2145–0020.

*Summary of Collection:* The National Opinion Research Center (NORC) will conduct this study for NSF in 2006. The National Research Council (NRC) conducted the survey from 1973 through 1995, the National Opinion Research Center (NORC) conducted the 1997 and 2003 surveys, and the Bureau of the Census conducted the 1999 and 2001 surveys. Data collection will begin in April 2006 using a mail questionnaire, computer assisted telephone interviewing and web survey. The survey will be collected in conformance with the Privacy Act of 1974 and the individual's response to the survey is voluntary. The first **Federal Register** notice for this survey was 70 FR 49320, published August 23, 2005, and one comment was received.

*Comment:* On August 23, 2005, NSF published in the **Federal Register** (70 FR 49320) a 60-day notice of its intent to request reinstatement of this information collection authority from OMB. In that notice, NSF solicited public comments for 60 days ending October 24, 2005. One comment was received from the public notice. The comment came from B. Sachau of Floram Park, NJ, via e-mail on August 23, 2005. Ms. Sachau objected to the information collection. Ms. Sachau had no specific suggestions for altering the data collection plans other than to discontinue them entirely.

*Response:* NSF responded to Ms. Sachau on November 22, 2005, describing the program, and addressing the frequency and the cost issues raised by Ms. Sachau. NSF believes that because the comment does not pertain to the collection of information on the required forms for which NSF is seeking OMB approval, NSF is proceeding with the clearance request.

*Need and Use of the Information:* The purpose of this longitudinal study is to provide national estimates of the doctorate level science and engineering workforce and changes in employment, education and demographic characteristics. The study is one of the three components of the Scientists and Engineers Statistical Data System (SESTAT). NSF uses this information to prepare Congressionally mandated reports such as Science and Engineering Indicators and Women, Minorities and Persons with Disabilities in Science and Engineering. A public release file of collected data, edited to protect respondent confidentiality, will be made available to researchers on CD–ROM and on the World Wide Web.

*Description of Respondents:* Individuals.

*Number of Respondents:* 34,400.

*Frequency of Responses:* Biennial reporting.

*Total Burden Hours:* 15,229.

*Title:* National Survey of Recent College Graduates.

*OMB Control Number:* 3145–0077.

*Summary of Collection:* The Bureau of the Census will conduct the study for NSF in the 2006 survey cycle. Mathematics Policy Research conducted the 2003 Survey and Westat Inc. conducted the surveys in 1995, 1997, 1999 and 2001. Data collection will begin in April 2006 using mail questionnaire, computer assisted telephone interviewing and web survey. The survey will be collected in conformance with the Privacy Act of 1974 and the individual responses to the survey are voluntary. The first **Federal Register** notice for this survey was 70 FR 49321, published August 23, 2005, and one comment was received.

*Comment:* On August 23, 2005, NSF published in the **Federal Register** (70 FR 49321) a 60-day notice of its intent to request reinstatement of this information collection authority from OMB. In that notice, NSF solicited public comments for 60 days ending October 24, 2005. One comment was received from the public notice. The comment came from B. Sachau of Floram Park, NJ, via e-mail on August 23, 2005. Ms. Sachau objected to the information collection. Ms. Sachau had no specific suggestions for altering the data collection plans other than to discontinue them entirely.

*Response:* NSF responded to Ms. Sachau on November 22, 2005, describing the program, and addressing the frequency and the cost issues raised by Ms. Sachau. NSF believes that because the comment does not pertain to the collection of information on the required forms for which NSF is seeking OMB approval, NSF is proceeding with the clearance request.

*Need and Use of the Information:* The purpose of this study is to provide cross sectional and longitudinal estimates of recent science and engineering graduates to use in preparing national estimates of the Nation's science and

engineering workforce. The study is one of three components Scientists and Engineers Statistical Data System (SESTAT). NSF uses this information to prepare Congressionally mandated reports such as Science and Engineering Indicators and Women, Minorities and Persons with Disabilities in Science and Engineering.

*Description of Respondents:* Individuals.

*Number of Respondents:* 21,600.

*Frequency of Responses:* Biennial reporting.

*Total Burden Hours:* 9,000.

*Title:* National Survey of College Graduates.

*OMB Control Number:* 3145–0141.

*Summary of Collection:* The Bureau of the Census, as in the past, will conduct this study for NSF. Questionnaires will be mailed in April 2006 and nonrespondents to the mail questionnaire will receive computer assisted telephone interviewing. The survey will be collected in conformance with the Privacy Act of 1974 and the individual's response to the survey is voluntary. The first federal register notice for this survey was 70 FR 49321, published August 23, 2005, and one comment was received.

*Comment:* On August 23, 2005, NSF published in the **Federal Register** (70 FR 49321) a 60-day notice of its intent to request renewal of this information collection authority from OMB. In that notice, NSF solicited public comments for 60 days ending October 24, 2005. One comment was received from the public notice. The comment came from B. Sachau of Floram Park, NJ, via e-mail on August 23, 2005. Ms. Sachau objected to the information collection. Ms. Sachau had no specific suggestions for altering the data collection plans other than to discontinue them entirely.

*Response:* NSF responded to Ms. Sachau on November 22, 2005, describing the program, and addressing the frequency and the cost issues raised by Ms. Sachau. NSF believes that because the comment does not pertain to the collection of information on the required forms for which NSF is seeking OMB approval, NSF is proceeding with the clearance request.

*Need and Use of the Information:* The purpose of this longitudinal study is to provide national estimates on the experienced science and engineering workforce and changes in employment, education and demographic characteristics over time. The study is the third component of the Scientists and Engineers Statistical Data System (SESTAT). NSF uses this information to prepare Congressionally mandated reports such as Science and Engineering Indicators and Women, Minorities and Persons with Disabilities in Science and Engineering. A public release file of collected data, edited to protect respondent confidentiality, will be made available to researchers on CD–ROM and on the World Wide Web.

*Description of Respondents:* Individuals.

*Number of Respondents:* 61,200.

*Frequency of Responses:* Biennial reporting.

*Total Burden Hours:* 25,500.

Dated: December 23, 2005.

**Suzanne H. Plimpton,**

*Reports Clearance Officer, National Science Foundation.*

[FR Doc. 05–24593 Filed 12–28–05; 8:45 am]

**BILLING CODE 7555–01–M**

## NUCLEAR REGULATORY COMMISSION

### Application for a License To Export High-Enriched Uranium

Pursuant to 10 CFR 110.70(b)(2) ''Public notice of receipt of an application,'' please take notice that the Nuclear Regulatory Commission has received the following request for an export license. Copies of the request can be accessed through the Public Electronic Reading Room (PERR) link *http://www.nrc.gov/reading-rm/adams.html* at the NRC Homepage.

A request for a hearing or petition for leave to intervene may be filed within 30 days after publication of this notice in the **Federal Register**. Any request for hearing or petition for leave to intervene shall be served by the requestor or petitioner upon the applicant, the Office of the General Counsel, U.S. Nuclear Regulatory Commission, Washington DC 20555; the Secretary, U.S. Nuclear Regulatory Commission, Washington, DC 20555; and the Executive Secretary, U.S. Department of State, Washington, DC 20520.

In its review of the application for a license to export special nuclear material as defined in 10 CFR Part 110 and noticed herein, the Commission does not evaluate the health, safety or environmental effects in the recipient nation of the material to be exported. The information concerning the application follows.

NRC EXPORT LICENSE APPLICATION FOR HIGH-ENRICHED URANIUM

| Name of applicant date of application date received application number docket number | Material type | End use | Country of destination |
|---|---|---|---|
| DOE/NNSA—Y12 November 30, 2005.<br><br>December 6, 2005, XSNM03427 11005591. | High-Enriched Uranium ..... | The material is to be exported to Chalk River Laboratories in Canada, and used to fabricate targets needed to produce medical isotopes. | Canada |

For The Nuclear Regulatory Commission.

Dated this 19th day of December 2005 at Rockville, Maryland.

**Margaret M. Doane,**

*Deputy Director, Office of International Programs.*

[FR Doc. E5–8060 Filed 12–28–05; 8:45 am]

BILLING CODE 7590–01–P

## NUCLEAR REGULATORY COMMISSION

**[Docket Nos. 50–266 AND 50–301]**

### Nuclear Management Company, LLC Point Beach Nuclear Plant, Units 1 and 2; Notice of Issuance of Renewed Facility Operating License Nos. DPR–24 and DPR–27 for an Additional 20–Year Period

Notice is hereby given that the U.S. Nuclear Regulatory Commission (the Commission) has issued Renewed Facility Operating License Nos. DPR–24 and DPR–27 to Nuclear Management Company, LLC (licensee), the operator of the Point Beach Nuclear Plant (PBNP), Units 1 and 2. Renewed Facility Operating License No. DPR–24 authorizes operation of PBNP, Unit 1, by the licensee at reactor core power levels not in excess of 1540 megawatts thermal (516 megawatts electric), in accordance with the provisions of the PBNP renewed license and its technical specifications. Renewed Facility Operating License No. DPR–27 authorizes operation of PBNP, Unit 2, by the licensee at reactor core power levels not in excess of 1540 megawatts thermal (516 megawatts electric), in accordance with the provisions of the PBNP renewed license and its Technical Specifications.

PBNP Units 1 and 2 are pressurized water reactors located in Two Rivers, Wisconsin. The licensee's application for the renewed licenses complied with the standards and requirements of the Atomic Energy Act of 1954, as amended (the Act), and the Commission's regulations. As required by the Act and the Commission's regulations in 10 CFR Chapter 1, the Commission has made appropriate findings, which are set forth in each license. Prior public notice of the action involving the proposed issuance of the renewed licenses and of an opportunity for a hearing regarding the proposed issuance of the renewed licenses was published in the **Federal Register** on April 13, 2004 (69 FR 19559).

For further details with respect to this action, see (1) Nuclear Management Company, LLC's license renewal application for Point Beach Nuclear Plant, Units 1 and 2, dated February 25, 2004, as supplemented by letters dated through August 23, 2005; (2) the Commission's safety evaluation report (NUREG–1839), published in December 2005; and (3) the Commission's final environmental impact statement (NUREG–1437, Supplement 23), published in August 2005. These documents are available at the NRC Public Document Room, One White Flint North, 11555 Rockville Pike, Rockville, Maryland 20852, and can be viewed from the NRC Public Electronic Reading Room at *http://www.nrc.gov/reading-rm/adams.html.*

Copies of Renewed Facility Operating License Nos. DPR–24 and DPR–27 may be obtained by writing to the U.S. Nuclear Regulatory Commission, Washington, DC 20555–0001, Attention: Director, Division of License Renewal. Copies of the Point Beach Nuclear Plant, Units 1 and 2 safety evaluation report (NUREG–1839) and the final environmental impact statement (NUREG–1437, Supplement 23) may be purchased from the National Technical Information Service, U.S. Department of Commerce, Springfield, Virginia 22161 (*http://www.ntis.gov*), 703–605–6000, or Attention: Superintendent of Documents, U.S. Government Printing Office, P.O. Box 371954 Pittsburgh, Pennsylvania, 15250–7954 (*http://www.gpoaccess.gov*), 202–512–1800. All orders should clearly identify the NRC publication number and the requestors Government Printing Office deposit account number or a VISA or MasterCard number and expiration date.

Dated at Rockville, Maryland, this 22nd day of December 2005.

For The Nuclear Regulatory Commission.

**Pao-Tsin Kuo,**

*Deputy Director, Division of License Renewal, Office of Nuclear Reactor Regulation.*

[FR Doc. E5–8061 Filed 12–28–05; 8:45 am]

BILLING CODE 7590–01–P

## NUCLEAR REGULATORY COMMISSION

**[Docket No. 70–1151]**

### Notice of License Renewal Request of Westinghouse Electric Company, Columbia, SC, and Opportunity To Request a Hearing

**AGENCY:** Nuclear Regulatory Commission.

**ACTION:** Notice of license renewal application, and opportunity to request a hearing.

**DATES:** A request for a hearing must be filed by February 27, 2006.

**FOR FURTHER INFORMATION CONTACT:** Mary Adams, Senior Project Manager, Fuel Cycle Facilities Branch, Division of Fuel Cycle Safety and Safeguards, Office of Nuclear Material Safety and Safeguards, U.S. Nuclear Regulatory Commission, Washington, DC 20555. Telephone: (301) 415–7249; fax number: (301) 415–5955; e-mail: *mta@nrc.gov.*

**SUPPLEMENTARY INFORMATION:**

#### I. Introduction

The Nuclear Regulatory Commission (NRC) has received, by letter dated September 29, 2005, a license renewal application from Westinghouse Electric Company (WEC), requesting renewal of License No. SNM–1107 at its Columbia Fuel Fabrication Facility site located in Columbia, South Carolina. License No. SNM–1107 authorizes the licensee to possess and use special nuclear material for the manufacture of fuel for nuclear power plants.

The Columbia Fuel Fabrication Facility has been licensed by the Atomic Energy Commission and its successor, the NRC, to manufacture low-enriched uranium fuel for nuclear power plants. The license was renewed in 1995 for a period of 10 years, expiring on November 30, 2005. By applications dated September 29 and October 5, 2005, WEC requested renewal of their license for a period of 20 years. The NRC will review the license renewal application for compliance with applicable sections of regulations in Title 10 of the Code of Federal Regulations (10 CFR)—Energy, Chapter I—Nuclear Regulatory Commission. The license renewal application included an Environmental Report (Enclosure 4 to the license renewal application), which the NRC will review and use to prepare an environmental assessment to assist in the NRC's determination on the license renewal application, as required by 10 CFR part 51, Environmental Protection Regulations for Domestic Licensing and Related Regulatory Functions, and the National Environmental Policy Act.

An NRC administrative review, documented in a letter to WEC dated November 2, 2005 (ML052980594), found the application acceptable to begin a technical review. Because WEC filed the application for renewal not less than 30 days before the expiration of the date stated in the existing license, the existing license will not expire until the Commission makes a final determination on the renewal application, in accordance with the timely renewal provision of 10 CFR 70.38(a)(1). If the NRC approves the renewal application, the approval will be documented in NRC License No. SNM–1107. However, before approving

the proposed renewal, the NRC will need to make the findings required by the Atomic Energy Act of 1954, as amended, and NRC's regulations. These findings will be documented in a Safety Evaluation Report and an Environmental Assessment and/or an Environmental Impact Statement.

**II. Opportunity To Request a Hearing**

The NRC hereby provides notice that this is a proceeding on an application for a license renewal. In accordance with the general requirements in Subpart C of 10 CFR Part 2, as amended on January 14, 2004 (69 FR 2182), any person whose interest may be affected by this proceeding and who desires to participate as a party must file a written request for a hearing and a specification of the contentions which the person seeks to have litigated in the hearing.

In accordance with 10 CFR 2.302 (a), a request for a hearing must be filed with the Commission either by:

1. First class mail addressed to: Office of the Secretary, U.S. Nuclear Regulatory Commission, Washington, DC 20555–0001, Attention: Rulemakings and Adjudications Staff;

2. Courier, express mail, and expedited delivery services: Office of the Secretary, Sixteenth Floor, One White Flint North, 11555 Rockville Pike, Rockville, MD 20852, Attention: Rulemakings and Adjudications Staff, between 7:45 a.m. and 4:15 p.m., Federal workdays;

3. E-mail addressed to the Office of the Secretary, U.S. Nuclear Regulatory Commission, *hearingdocket@nrc.gov;* or

4. By facsimile transmission addressed to the Office of the Secretary, U.S. Nuclear Regulatory Commission, Washington, DC, Attention: Rulemakings and Adjudications Staff, at (301) 415–1101; verification number is (301) 415–1966.

In accordance with 10 CFR 2.302(b), all documents offered for filing must be accompanied by proof of service on all parties to the proceeding or their attorneys of record as required by law or by rule or order of the Commission, including:

1. The applicant, Westinghouse Electric Company, P.O. Drawer R, Columbia, South Carolina, 29250, Attention: Nancy Parr; and

2. The NRC staff, by delivery to the Office of the General Counsel, One White Flint North, 11555 Rockville Pike, Rockville, MD 20852, or by mail addressed to the Office of the General Counsel, U.S. Nuclear Regulatory Commission, Washington, DC 20555–0001. Hearing requests should also be transmitted to the Office of the General Counsel, either by means of facsimile transmission to (301) 415–3725, or via e-mail to *ogcmailcenter@nrc.gov.*

The formal requirements for documents contained in 10 CFR 2.304(b), (c), (d), and (e), must be met. In accordance with 10 CFR 2.304 (f), a document filed by electronic mail or facsimile transmission need not comply with the formal requirements of 10 CFR 2.304(b), (c), and (d), as long as an original and two (2) copies otherwise complying with all of the requirements of 10 CFR 2.304(b), (c), and (d) are mailed within two (2) days thereafter to the Secretary, U.S. Nuclear Regulatory Commission, Washington, DC 20555–0001, Attention: Rulemakings and Adjudications Staff.

In accordance with 10 CFR 2.309(b), a request for a hearing must be filed by February 27, 2006.

In addition to meeting other applicable requirements of 10 CFR 2.309, the general requirements involving a request for a hearing filed by a person other than an applicant must state:

1. The name, address, and telephone number of the requester;

2. The nature of the requester's right under the Act to be made a party to the proceeding;

3. The nature and extent of the requester's property, financial or other interest in the proceeding;

4. The possible effect of any decision or order that may be issued in the proceeding on the requester's interest; and

5. The circumstances establishing that the request for a hearing is timely in accordance with 10 CFR 2.309(b).

In accordance with 10 CFR 2.309(f)(1), a request for hearing or petitions for leave to intervene must set forth with particularity the contentions sought to be raised. For each contention, the request or petition must:

1. Provide a specific statement of the issue of law or fact to be raised or controverted;

2. Provide a brief explanation of the basis for the contention;

3. Demonstrate that the issue raised in the contention is within the scope of the proceeding;

4. Demonstrate that the issue raised in the contention is material to the findings that the NRC must make to support the action that is involved in the proceeding;

5. Provide a concise statement of the alleged facts or expert opinions which support the requester's/petitioner's position on the issue and on which the requester/petitioner intends to rely to support its position on the issue; and

6. Provide sufficient information to show that a genuine dispute exists with the applicant on a material issue of law or fact. This information must include references to specific portions of the application (including the applicant's environmental report and safety report) that the requester/petitioner disputes and the supporting reasons for each dispute, or, if the requester/petitioner believes the application fails to contain information on a relevant matter as required by law, the identification of each failure and the supporting reasons for the requester's/petitioner's belief.

In addition, in accordance with 10 CFR 2.309(f)(2), contentions must be based on documents or other information available at the time the petition is to be filed, such as the application, supporting safety analysis report, environmental report or other supporting documents filed by an applicant or licensee, or otherwise available to the petitioner. On issues arising under the National Environmental Policy Act, the requester/petitioner shall file contentions based on the applicant's environmental report. The requester/petitioner may amend those contentions or file new contentions if there are data or conclusions in the NRC draft, or final environmental impact statement, environmental assessment, or any supplements relating thereto, that differ significantly from the data or conclusions in the applicant's documents. Otherwise, contentions may be amended or new contentions filed after the initial filing only with leave of the presiding officer.

Each contention shall be given a separate numeric or alpha designation within one of the following groups:

1. Technical—primarily concerns issues relating to matters discussed or referenced in the Safety Evaluation Report for the proposed action.

2. Environmental—primarily concerns issues relating to matters discussed or referenced in the Environmental Report for the proposed action.

3. Emergency Planning—primarily concerns issues relating to matters discussed or referenced in the Emergency Plan as it relates to the proposed action.

4. Physical Security—primarily concerns issues relating to matters discussed or referenced in the Physical Security Plan as it relates to the proposed action.

5. Miscellaneous—does not fall into one of the categories outlined above.

If the requester/petitioner believes a contention raises issues that cannot be classified as primarily falling into one of these categories, the requester/petitioner must set forth the contention and supporting bases, in full, separately for

each category into which the requester/petitioner asserts the contention belongs with a separate designation for that category.

Requesters/petitioners should, when possible, consult with each other in preparing contentions and combine similar subject matter concerns into a joint contention, for which one of the co-sponsoring requesters/petitioners is designated the lead representative. Further, in accordance with 10 CFR 2.309(f)(3), any requester/petitioner that wishes to adopt a contention proposed by another requester/petitioner must do so in writing within ten days of the date the contention is filed, and designate a representative who shall have the authority to act for the requester/petitioner.

In accordance with 10 CFR 2.309(g), a request for hearing and/or petition for leave to intervene may also address the selection of the hearing procedures, taking into account the provisions of 10 CFR 2.310.

### III. Further Information

Documents related to this action, including the application for amendment and supporting documentation, are available electronically at the NRC's Electronic Reading Room at *http://www.nrc.gov/reading-rm/adams.html.* From this site, you can access the NRC's Agencywide Document Access and Management System (ADAMS), which provides text and image files of NRC's public documents. The ADAMS accession numbers for the documents related to this notice are:

| Document | ADAMS Accession No. | Date |
|---|---|---|
| Transmittal letter | ML052790078 | 09/29/2005 |
| License renewal application public version | ML052990073 | 09/29/2005 |
| Renewal application references | ML053250289 | 10/05/2005 |
| NRC acceptance letter | ML052980594 | 11/02/2005 |
| Environmental Report | ML052790081 | 12/2004 |

If you do not have access to ADAMS or if there are problems in accessing the documents located in ADAMS, contact the NRC Public Document Room (PDR) Reference staff at 1–800–397–4209, 301–415–4737, or by e-mail to *pdr@nrc.gov.*

These documents may also be viewed electronically on the public computers located at the NRC's PDR, O–1–F–21, One White Flint North, 11555 Rockville Pike, Rockville, MD 20852. The PDR reproduction contractor will copy documents for a fee.

Dated at Rockville, Maryland, this 20th day of December, 2005.

For the Nuclear Regulatory Commission.

**Gary Janosko,**

*Chief, Fuel Cycle Facilities Branch, Division of Fuel Cycle Safety and Safeguards, Office of Nuclear Material Safety And Safeguards.*

[FR Doc. E5–8062 Filed 12–28–05; 8:45 am]

BILLING CODE 7590–01–P

## NUCLEAR REGULATORY COMMISSION

### Advisory Committee on Nuclear Waste; Notice of Meeting

The Advisory Committee on Nuclear Waste (ACNW) will hold its 167th meeting on January 10–12, 2006, Room T–2B3, Two White Flint North, 11545 Rockville Pike, Rockville, Maryland.

The schedule for this meeting is as follows:

**Tuesday, January 10, 2006**

*8:30 a.m.–8:45 a.m.: Opening Statement (Open)*—The ACNW Chairman will make opening remarks regarding the conduct of today's sessions.

*8:45 a.m.–10:15 a.m.: Status of Risk-Informed Decisionmaking for Nuclear Materials and Waste Application (Open)*—The Committee will hear presentations by and hold discussions with representatives of the NRC staff regarding draft staff guidance on the application of risk insights in the waste and materials areas.

*10:30 a.m.–11:30 a.m.: Fabrication of Pressurized Water Reactor (PWR) Uncanistered Fuel Waste Package (Open)*—The Committee will hear presentations by and hold discussions with representatives of the NRC staff regarding fabrication of a pressurized water reactor uncanistered fuel waste package prototype for the proposed Yucca Mountain repository.

*1 p.m.–2 p.m.: Spent Fuel Transportation Package Response to the Baltimore Tunnel Fire Scenario (NUREG/CR–6886) (Open)*—The Committee will hear presentations by and hold discussions with representatives of the NRC staff regarding a study involving the 2001 Baltimore tunnel fire. The study involves the 3-dimensional modeling of the behavior of three different transportation cask types under thermal conditions similar to those that existed in the Baltimore tunnel fire event. The staff will also summarize comments received from the public on NUREG/CR–6886.

*2 p.m.–3 p.m.: White Paper on Transportation (Open)*—The Committee will discuss a proposed white paper on transportation of nuclear waste.

*3:15 p.m.–5:30 p.m.: Preparation of ACNW Reports/Letters (Open)*—The Committee will discuss proposed ACNW reports on matters considered during this and/or previous meetings.

**Wednesday, January 11, 2006**

*9:30 a.m.–9:35 a.m.: Opening Statement (Open)*—The ACNW Chairman will make opening remarks regarding the conduct of today's sessions.

*9:35 a.m.–10:30 a.m.: Source Characterization (Spatial Analysis and Decision Assistance Code) (Open)*—The Committee will hear presentations by and hold discussions with representatives of the NRC staff regarding the capabilities of Version 4.1 of the Spatial Analysis and Decision Assistance (SADA) Bayesian subsurface analysis code.

*10:30 a.m.–11:30 a.m.: Use of Dedicated Trains for Transportation of High-Level Radioactive Waste and Spent Nuclear Fuel (Open)*—The Committee will hear presentations by and hold discussions with a representative of the Federal Railroad Administration regarding their study on the use of dedicated trains for transportation of high-level radioactive waste and spent nuclear fuel to the proposed Yucca Mountain repository.

*1 p.m.–2 p.m.: Preparation for Commission Briefing (Open)*—The Committee will review the final presentations in preparation for the Commission briefing on January 11, 2006.

*2 p.m.–4 p.m.: Meeting with the NRC Commissioners, Commissioners' Conference Room, One White Flint North, Rockville, MD (Open)*—The Committee will meet with the NRC

Commissioners to discuss recent and planned activities.

*4:15 p.m.–5:30 p.m.: Preparation of ACNW Reports/Letters (Open)*—The Committee will discuss proposed ACNW reports on matters considered during this and/or previous meetings.

**Thursday, January 12, 2006**

*8:30 a.m.–8:35 a.m.: Opening Remarks by the ACNW Chairman (Open)*—The ACNW Chairman will make opening remarks regarding the conduct of today's sessions.

*8:35 a.m.–11:45 a.m.: Discussion of ACNW Reports/Letters (Open)*—The Committee will discuss prepared draft letters and determine whether letters would be written on topics discussed during the meeting.

*11:45 a.m.–12:45 p.m.: Miscellaneous (Open)*—The Committee will discuss matters related to the conduct of ACNW activities, and specific issues that were not completed during previous meetings, as time and availability of information permit. Discussions may include future Committee Meetings.

Procedures for the conduct of and participation in ACNW meetings were published in the **Federal Register** on October 11, 2005 (70 FR 59081). In accordance with these procedures, oral or written statements may be presented by members of the public. Electronic recordings will be permitted only during those portions of the meeting that are open to the public. Persons desiring to make oral statements should notify Mr. Michael P. Lee (Telephone 301–415–6887), between 8:15 a.m. and 5 p.m. ET, as far in advance as practicable so that appropriate arrangements can be made to schedule the necessary time during the meeting for such statements. Use of still, motion picture, and television cameras during this meeting will be limited to selected portions of the meeting as determined by the ACNW Chairman. Information regarding the time to be set aside for taking pictures may be obtained by contacting the ACNW office prior to the meeting. In view of the possibility that the schedule for ACNW meetings may be adjusted by the Chairman as necessary to facilitate the conduct of the meeting, persons planning to attend should notify Mr. Lee as to their particular needs.

Further information regarding topics to be discussed, whether the meeting has been canceled or rescheduled, the Chairman's ruling on requests for the opportunity to present oral statements and the time allotted, therefore can be obtained by contacting Mr. Lee.

ACNW meeting agenda, meeting transcripts, and letter reports are available through the NRC Public Document Room (PDR) at *pdr@nrc.gov*, or by calling the PDR at 1–800–397–4209, or from the Publicly Available Records System component of NRC's document system (ADAMS) which is accessible from the NRC Web site at *http://www.nrc.gov/reading-rm/adams.html* or *http://www.nrc.gov/reading-rm/doc-collections/* (ACRS & ACNW Mtg schedules/agendas).

Video Teleconferencing service is available for observing open sessions of ACNW meetings. Those wishing to use this service for observing ACNW meetings should contact Mr. Theron Brown, ACNW Audiovisual Technician (301–415–8066), between 7:30 a.m. and 3:45 p.m. ET, at least 10 days before the meeting to ensure the availability of this service. Individuals or organizations requesting this service will be responsible for telephone line charges and for providing the equipment and facilities that they use to establish the video teleconferencing link. The availability of video teleconferencing services is not guaranteed.

Dated: December 22, 2005.

**Andrew L. Bates,**

*Advisory Committee Management Officer.*

[FR Doc. E5–8088 Filed 12–28–05; 8:45 am]

BILLING CODE 7590–01–P

## NUCLEAR REGULATORY COMMISSION

### Advisory Committee on Reactor Safeguards Subcommittee Meeting on Planning and Procedures; Notice of Meeting

The ACRS Subcommittee on Planning and Procedures will hold a meeting on January 26–27, 2006, Bethesda North Marriott Hotel & Conference Center, Oakley Room , 5701 Marinelli Road, North Bethesda, Maryland.

The entire meeting will be open to public attendance, with the exception of certain portions that may be closed pursuant to 5 U.S.C. 552b ( c) (2) and (6) to discuss organizational and personnel matters that relate solely to internal personnel rules and practices of ACRS, and information the release of which would constitute a clearly unwarranted invasion of personal privacy.

The agenda for the subject meeting shall be as follows:

**Thursday, January 26, 2006–8:30 a.m. Until the Conclusion of Business**

The Subcommittee will discuss ACRS business processes, anticipated workload, future technical expertise needed on the ACRS, strategy for handling anticipated heavy workload, proactive initiatives, knowledge management, ACRS subcommittee structure, and other activities related to the conduct of ACRS business.

**Friday, January 27, 2006–8:30 a.m. Until 1 p.m.**

The Subcommittee will discuss stakeholders' comments received during ACRS self-assessment survey, significant technical challenges in certain areas, including advanced reactor designs, early site permits, extended power uprates, and risk-informing 10 CFR part 50, and other activities related to the conduct of ACRS business.

The Subcommittee will gather information, analyze relevant issues and facts, and formulate proposed positions and actions, as appropriate, for deliberation by the full Committee. Members of the public desiring to provide oral statements and/or written comments should notify the Designated Federal Official, Dr. John T. Larkins (telephone: 301–415–7360) between 7:30 a.m. and 4:15 p.m. (ET) five days prior to the meeting, if possible, so that appropriate arrangements can be made. Electronic recordings will be permitted only during those portions of the meeting that are open to the public.

Further information regarding this meeting can be obtained by contacting the Designated Federal Official between 7:30 a.m. and 4:15 p.m. (ET). Persons planning to attend this meeting are urged to contact the above named individual at least two working days prior to the meeting to be advised of any potential changes in the agenda.

Dated: December 22, 2005.

**Michael L. Scott,**

*Branch Chief, ACRS/ACNW.*

[FR Doc. E5–8090 Filed 12–28–05; 8:45 am]

BILLING CODE 7590–01–P

## PENSION BENEFIT GUARANTY CORPORATION

### Submission of Information Collection for OMB Review; Comment Request; Survey of Nonparticipating Single Premium Group Annuity Rates

**AGENCY:** Pension Benefit Guaranty Corporation.

**ACTION:** Notice of request for extension of OMB approval.

**SUMMARY:** The Pension Benefit Guaranty Corporation (''PBGC'') is requesting that the Office of Management and Budget (''OMB'') extend approval, under the Paperwork Reduction Act, of a collection of information (OMB control

number 1212–0030; expires January 31, 2006). This voluntary collection of information is a quarterly survey of insurance company rates for pricing annuity contracts. The survey is conducted by the American Council of Life Insurers for the PBGC. This notice informs the public of the PBGC's request and solicits public comment on the collection of information.

**DATES:** Comments should be submitted by January 30, 2006.

**ADDRESSES:** Comments may be mailed to the Office of Information and Regulatory Affairs of the Office of Management and Budget, Attn: Desk Officer for Pension Benefit Guaranty Corporation, Washington, DC 20503. Copies of the request for extension (including the collection of information) may be obtained without charge by writing to the PBGC's Office of the General Counsel, Disclosure Division, suite 11–102, 1200 K Street, NW., Washington, DC 20005–4026, or by visiting that office or calling 202–326–4040 during normal business hours. (TTY and TDD users may call the Federal relay service toll-free at 1–800–877–8339 and request connection to 202–326–4040.)

**FOR FURTHER INFORMATION CONTACT:** Thomas H. Gabriel, Attorney, Legislative & Regulatory Department, Pension Benefit Guaranty Corporation, 1200 K Street, NW., Washington, DC 20005–4026, 202–326–4024. (TTY and TDD users may call the Federal relay service toll-free at 1–800–877–8339 and request connection to 202–326–4024).

**SUPPLEMENTARY INFORMATION:** The Pension Benefit Guaranty Corporation's regulations prescribe actuarial valuation methods and assumptions (including interest rate assumptions) to be used in determining the actuarial present value of benefits under single-employer plans that terminate (29 CFR Part 4044) and under multiemployer plans that undergo a mass withdrawal of contributing employers (29 CFR Part 4281). Each month the PBGC publishes the interest rates to be used under those regulations for plans terminating or undergoing mass withdrawal during the next month.

The interest rates are intended to reflect current conditions in the investment and annuity markets. To determine these interest rates, the PBGC gathers pricing data from insurance companies that are providing annuity contracts to terminating pension plans through a quarterly ''Survey of Nonparticipating Single Premium Group Annuity Rates.'' The survey is distributed by the American Council of Life Insurers and provides the PBGC with ''blind'' data (i.e., is conducted in such a way that the PBGC is unable to match responses with the companies that submitted them). The information from the survey is also used by the PBGC in determining the interest rates it uses to value benefits payable to participants and beneficiaries in PBGC-trusteed plans for purposes of the PBGC's financial statements.

The survey is directed at insurance companies that have volunteered to participate, most or all of which are members of the American Council of Life Insurers. The survey is conducted quarterly and will be sent to approximately 22 insurance companies. Based on experience under the current approval, the PBGC estimates that 11 insurance companies will complete and return the survey. The PBGC further estimates that the average annual burden of this collection of information is 41 hours and $110.

The collection of information has been approved by OMB under control number 1212–0030 through January 31, 2006. The PBGC is requesting that OMB extend its approval for another three years. An agency may not conduct or sponsor, and a person is not required to respond to, a collection of information unless it displays a currently valid OMB control number.

Issued in Washington, DC, this 19th day of December, 2005.

**Rick Hartt,**

*Chief Technology Officer, Pension Benefit Guaranty Corporation.*

[FR Doc. E5–8006 Filed 12–28–05; 8:45 am]

BILLING CODE 7708–01–P

## SECURITIES AND EXCHANGE COMMISSION

### Proposed Collection; Comment Request

Upon written request, copies available from: Securities and Exchange Commission, Office of Filings and Information Services, Washington, DC 20549.

*Extension:*

Rule 22d–1, Sec File No. 270–275, OMB Control No. 3235–0310.

Notice is hereby given that pursuant to the Paperwork Reduction Act of 1995 [44 U.S.C. 3501–3520], the Securities and Exchange Commission (the ''Commission'') is soliciting comments on the collections of information summarized below. The Commission plans to submit these existing collections of information to the Office of Management and Budget (''OMB'') for extension and approval.

Rule 22d–1 [17 CFR 270.22d–1] under the Investment Company Act of 1940 (the ''Act'') provides registered investment companies that issue redeemable securities (''funds'') an exemption from section 22(d) of the Investment Company Act to the extent necessary to permit scheduled variations in or elimination of the sales load on fund securities for particular classes of investors or transactions, provided certain conditions are met. The rule imposes an annual burden per series of a fund of approximately 15 minutes, so that the total annual burden for the approximately 5,015 series of funds that might rely on the rule is estimated to be 1,254 hours.

The estimate of average burden hours is made solely for the purposes of the Paperwork Reduction Act, and is not derived from a comprehensive or even a representative survey or study. An agency may not conduct or sponsor, and a person is not required to respond to, a collection of information unless it displays a currently valid OMB control number.

Written comments are requested on: (a) Whether the collection of information is necessary for the proper performance of the functions of the Commission, including whether the information has practical utility; (b) the accuracy of the Commission's estimate of the burden[s] of the collection of information; (c) ways to enhance the quality, utility, and clarity of the information collected; and (d) ways to minimize the burden of the collection of information on respondents, including through the use of automated collection techniques or other forms of information technology. Consideration will be given to comments and suggestions submitted in writing within 60 days of this publication.

Please direct your written comments to R. Corey Booth, Director/Chief Information Officer, Office of Information Technology, Securities and Exchange Commission, 100 F Street, NE., Washington, DC 20549.

Dated: December 20, 2005.

**Jonathan G. Katz,**

*Secretary.*

[FR Doc. E5–8050 Filed 12–28–05; 8:45 am]

BILLING CODE 8010–01–P

## SECURITIES AND EXCHANGE COMMISSION

### Proposed Collection; Comment Request

Upon Written Request, Copies Available From: Securities and Exchange, Commission Office of Filings and

Information Services, Washington, DC 20549.

Rule 15c1–7, SEC File No. 270–146, OMB Control No. 3235–0134

Notice is hereby given that pursuant to the Paperwork Reduction Act of 1995 (44 U.S.C. 3501 *et seq.*), the Securities and Exchange Commission (''Commission'') is soliciting comments on the collections of information summarized below. The Commission plans to submit this existing collection of information to the Office of Management and Budget for extension and approval.

Rule 15c1–7 provides that any act of a broker-dealer designed to effect securities transactions with or for a customer account over which the broker-dealer (directly or through an agent or employee) has discretion will be considered a fraudulent, manipulative, or deceptive practice under the federal securities laws, unless a record is made of the transaction immediately by the broker-dealer. The record must include (a) the name of the customer, (b) the name, amount, and price of the security, and (c) the date and time when such transaction took place. The Commission estimates that 500 respondents collect information annually under Rule 15c1–7 and that approximately 33,333 hours would be required annually for these collections.

Written comments are invited on: (a) Whether the proposed collection of information is necessary for the proper performance of the functions of the agency, including whether the information shall have practical utility; (b) the accuracy of the agency's estimate of the burden of the proposed collection of information; (c) ways to enhance the quality, utility, and clarity of the information to be collected; and (d) ways to minimize the burden of the collection of information on respondents, including through the use of automated collection techniques or other forms of information technology. Consideration will be given to comments and suggestions submitted in writing within 60 days of this publication.

Direct your written comments to R. Corey Booth, Director/Chief Information Officer, Office of Information Technology, Securities and Exchange Commission, 100 F St. NE., Washington, DC 20549.

Dated: December 20, 2005.

**Jonathan G. Katz,**

*Secretary.*

[FR Doc. E5–8058 Filed 12–28–05; 8:45 am]

**BILLING CODE 8010–01–P**

## SECURITIES AND EXCHANGE COMMISSION

### Proposed Collection; Comment Request

Upon written request, copies available from: Securities and Exchange Commission, Office of Filings and Information Services, Washington, DC 20549.

*Extension:*

Rule 2a–7, SEC File No. 270–258, OMB Control No. 3235–0268.

Notice is hereby given that under the Paperwork Reduction Act of 1995 [44 U.S.C. 3501], the Securities and Exchange Commission (the ''Commission'') is soliciting public comments on the collections of information summarized below. The Commission plans to submit these existing collections of information to the Office of Management and Budget (''OMB'') for extension and approval.

Rule 2a–7 [17 CFR 270.2a–7] under the Investment Company Act of 1940 [15 U.S.C. 80a] (the ''Act'') governs money market funds. Money market funds are open-end management investment companies that differ from other open-end management investment companies in that they seek to maintain a stable price per share, usually $1.00. The rule exempts money market funds from the valuation requirements of the Act, and, subject to certain risk-limiting conditions, permits money market funds to use the ''amortized cost method'' of asset valuation or the ''penny-rounding method'' of share pricing.

Rule 2a–7 imposes certain recordkeeping and reporting obligations on money market funds. The board of directors of a money market fund, in supervising the fund's operations, must establish written procedures designed to stabilize the fund's net asset value (''NAV''). The board also must adopt guidelines and procedures relating to certain responsibilities it delegates to the fund's investment adviser. These procedures typically address various aspects of the fund's operations. The fund must maintain and preserve for six years a written copy of both these procedures and guidelines. The fund also must maintain and preserve for six years a written record of the board's considerations and actions taken in connection with the discharge of its responsibilities, to be included in the board's minutes. In addition, the fund must maintain and preserve for three years written records of certain credit risk analyses, evaluations with respect to securities subject to demand features or guarantees, and determinations with respect to adjustable rate securities and asset backed securities. If the board takes action with respect to defaulted securities, events of insolvency, or deviations in share price, the fund must file with the Commission an exhibit to Form N–SAR describing the nature and circumstances of the action. If any portfolio security fails to meet certain eligibility standards under the rule, the fund also must identify those securities in an exhibit to Form N–SAR. After certain events of default or insolvency relating to a portfolio security, the fund must notify the Commission of the event and the actions the fund intends to take in response to the situation.

The recordkeeping requirements in rule 2a–7 are designed to enable Commission staff in its examinations of money market funds to determine compliance with the rule, as well as to ensure that money market funds have established procedures for collecting the information necessary to make adequate credit reviews of securities in their portfolios. The reporting requirements of rule 2a–7 are intended to assist Commission staff in overseeing money market funds.

Commission staff estimates that each of 847 [1] money market funds spends a total of approximately 1220 hours [2] of professional time (at $76 per hour) [3] to record credit risk analyses and determinations regarding adjustable rate securities, asset backed securities and securities subject to a demand feature or guarantee, for a total of approximately $79 million. The staff further estimates that each of 24 new money market funds spends a total of 21 hours of director, legal, and support staff time at a total cost of approximately $126,216 to adopt procedures designed to stabilize the fund's NAV and guidelines regarding the delegation of certain responsibilities to the fund's adviser.[4] The staff further

[1] These include registered money market funds and series of registered funds. This estimate is based on information from Lipper Inc.'s Lana database as of September 30, 2005.

[2] This average is based on discussions with individuals at money market funds and their advisers. The actual number of burden hours may vary significantly depending on the type and number of portfolio securities held by individual funds.

[3] The estimated hourly cost of professional time was based on the weighted average annual salaries reported for senior business analysts, floor managers and portfolio managers in New York City in Securities Industry Association, *Management and Professional Earnings in the Securities Industry* (2003) and Securities Industry Association, *Office Salaries in the Securities Industry* (2003) (collectively, the ''SIA Salary Guides'').

[4] This estimate is based on information from iMoneyNet's database. During the past three years, an average of 24 new money market funds have been created annually. In calculating industry costs for complying with the information collection requirements of rule 2a–7, the Commission staff

estimates that on average each of 212 money market funds spends a total of 4.5 hours of director and legal time at a total cost of approximately $916,370 to review and amend written procedures and guidelines each year.[5] Finally, the staff estimates that one money market fund that experiences a change in certain eligibility standards for portfolio securities or an event of default or insolvency relating to portfolio securities spends a total of one and a half hours of professional legal time (at $109.97 per hour) documenting board determinations and notifying the Commission regarding the event, for a total of $165. Thus, the Commission estimates the total annual burden of the rule's information collection requirements are 1,034,800 hours at an annual cost of $80 million.[6]

Based on these estimates, Commission staff estimates the total burden of the rule's paperwork requirements for money market funds to be 1,034,800 hours.[7] This is an increase from the previous estimate of 480,830 hours. The increase is attributable to updated information from money market funds regarding hourly burdens and the significant differences in burden hours reported by the funds selected at random to be surveyed in different submission years.

These estimates of burden hours are made solely for the purposes of the Paperwork Reduction Act. The estimates are not derived from a comprehensive or even a representative survey or study of Commission rules.

In addition to the burden hours, Commission staff estimates that money market funds will incur costs to preserve records required under rule 2a–7. These costs will vary significantly for individual funds, depending on the amount of assets under fund management and whether the fund preserves its records in a storage facility in hard copy or has developed and maintains a computer system to create and preserve compliance records.[8] Commission staff estimates that the amount an individual fund may spend ranges from $100 per year to $300,000. Based on a cost of $0.0000204 per dollar of assets under management for small fund, $0.0000005 per dollar assets under management for medium funds, and $0.0000046 per dollar of assets under management for large funds,[9] the staff estimates compliance with rule 2a–7 costs the fund industry approximately $7.6 million per year.[10] Based on responses from individuals in the money market fund industry, the staff estimates that some of the largest fund complexes have created computer programs for maintaining and preserving compliance records for rule 2a–7. Based on a cost of $0.0000231 per dollar of assets under management for large funds, the staff estimates that total annualized capital/startup costs range from $0 for small funds to $37.5 million for all large funds. Commission staff further estimates that, even absent the requirements of rule 2a–7, money market funds would spend at least half of the amount for capital costs ($19 million) and for record preservation ($3.8 million) to establish and maintain these records and the systems for preserving them as a part of sound business practices to ensure diversification and minimal credit risk in a portfolio for a fund that seeks to maintain a stable price per share.

The collections of information required by rule 2a–7 are necessary to obtain the benefits described above. Notices to the Commission will not be kept confidential. An agency may not conduct or sponsor, and a person is not required to respond to, a collection of information unless it displays a currently valid control number.

Written comments are requested on: (a) Whether the collections of information are necessary for the proper performance of the functions of the Commission, including whether the information has practical utility; (b) the accuracy of the Commission's estimate of the burdens of the collection of information; (c) ways to enhance the quality, utility and clarity of the information collected; and (d) ways to minimize the burden of the collection of information on respondents, including through the use of automated collection techniques or other forms of information technology. Consideration will be given to comments and suggestions submitted in writing within 60 days of this publication.

Please direct your written comments to R. Corey Booth, Director/Chief Information Officer, Office of Information Technology, Securities and Exchange Commission, 100 F. Street, NE., Washington, DC 20549.

Dated: December 20, 2005.

**Jonathan G. Katz,**

*Secretary.*

[FR Doc. E5–8065 Filed 12–28–05; 8:45 am]

BILLING CODE 8010–01–P

estimate that fund boards' hourly rate is $2000 per hour. The estimated costs for professional and support staff time were based on the average annual salaries reported in the SIA Salary Guides. The estimated costs for legal time was based on the weighted average of associate general counsel salaries reported in the SIA Salary Guides and New York law firm attorney salaries (outside counsel) based on a survey conducted by the National Law Journal available at *http://www.law.com/special/professionals/nlj/2002/firm_by_firm_sampling_of_billing_rates_nationwide.shtml.*

[5] For Paperwork Reduction Act (''PRA'') purposes we assumed that on average 25% of money market funds would review and update their procedures on an annual basis.

[6] A significant portion of the recordkeeping burden involves organizing information that the funds already collect when initially purchasing securities. In addition, when a money market fund analyzes a security, the analysis need not be presented in any particular format. Money market funds therefore have a choice of methods for maintaining these records that vary in technical sophistication and formality (*e.g.* handwritten notes, computer disks, etc.). Accordingly, the cost of preparing these documents may vary significantly among individual funds. The burden hours associated with filing reports to the Commission as an exhibit to Form N-SAR are included in the PRA burden estimate for that form.

[7] This estimate is based on the following calculation: ((847 × 1220) + (1 × 1.5) + (24 × 21) + (212 × 4.5) = 1,034,800.

[8] The amount of assets under management in individual money market funds ranges from approximately $400,000 to $109 billion.

[9] For purpose of this PRA submission, Commission staff used the following categories for fund sizes: (i) Small—money market funds with $50 million or less in assets under management, (ii) medium—money market funds with more than $50 million up to and including $1 billion in assets under management; and (iii) large—money market funds with more than $1 billion in assets under management.

[10] The staff estimated the annual cost of preserving the required books and records by identifying the annual costs incurred by several funds and then relating this total cost to the average net assets of these funds during the year. With a total of $2.2 billion under management in small funds, $174.1 billion under management in medium funds and $1623.8 billion under management in large funds, the costs of preservation were estimated as follows: ((0.0000204 × $2.2 billion) + (0.0000005 × $174.1) + (0.0000046 × $1623.8 billion) = $7.6 million. See supra note 9 regarding sizes of large, medium, and small funds.

## SECURITIES AND EXCHANGE COMMISSION

**[Release No. IC–27195]**

### Notice of Applications for Deregistration Under Section 8(f) of the Investment Company Act of 1940

December 21, 2005.

The following is a notice of applications for deregistration under section 8(f) of the Investment Company Act of 1940 for the month of December, 2005. A copy of each application may be obtained for a fee at the SEC's Public Reference Branch (tel. 202–551–5850). An order granting each application will be issued unless the SEC orders a hearing. Interested persons may request a hearing on any application by writing to the SEC's Secretary at the address below and serving the relevant applicant with a copy of the request, personally or by mail. Hearing requests should be received by the SEC by 5:30

p.m. on January 17, 2006, and should be accompanied by proof of service on the applicant, in the form of an affidavit or, for lawyers, a certificate of service. Hearing requests should state the nature of the writer's interest, the reason for the request and the issues contested. Persons who wish to be notified of a hearing may request notification by writing to the Secretary, U.S. Securities and Exchange Commission, 100 F Street, NE., Washington, DC 20549–9303. For Further Information Contact: Diane L. Titus at (202) 551–6810, SEC, Division of Investment Management, Office of Investment Company Regulation, 100 F Street, NE., Washington, DC 20549–0504.

**Amerindo Funds Inc.**

[File No. 811–7531]

*Summary:* Applicant seeks an order declaring that it has ceased to be an investment company. On October 24, 2005, applicant transferred its assets to Munder Internet Fund, a series of Munder Series Trust, based on net asset value. Expenses of $133,000 incurred in connection with the reorganization were paid by applicant and Munder Capital Management, applicant's investment adviser.

*Filing Dates:* The application was filed on November 23, 2005, and amended on December 14, 2005.

*Applicant's Address:* 599 Lexington Ave., New York, NY 10022.

**Scudder Floating Rate Fund**

[File No. 811–9269]

*Summary:* Applicant, a closed-end investment company, seeks an order declaring that it has ceased to be an investment company. On December 20, 2002, applicant made a liquidating distribution to its shareholders, based on net asset value. Expenses of $146,339 incurred in connection with the liquidation were paid by Deutsche Investment Management Americas, Inc., applicant's investment adviser.

*Filing Date:* The application was filed on November 29, 2005.

*Applicant's Address:* 222 South Riverside Plaza, Chicago, IL 60606.

**Scudder International Research Fund, Inc.**

[File No. 811–8395]

*Summary:* Applicant seeks an order declaring that it has ceased to be an investment company. On May 17, 2002, applicant made a liquidating distribution to its shareholders, based on net asset value. Expenses of $7,055 incurred in connection with the liquidation were pay by Deutsche Investment Management Americas, Inc., applicant's investment adviser.

*Filing Date:* The application was filed on November 29, 2005.

*Applicant's Address:* 222 South Riverside Plaza, Chicago, IL 60606.

**Star Lane Trust**

[File No. 811–9795]

*Summary:* Applicant, a unit investment trust, seeks an order declaring that it has ceased to be an investment company. On September 30, 2005, applicant made a liquidating distribution to its shareholders, based on net asset value. Applicant incurred no expenses in connection with the liquidation.

*Filing Date:* The application was filed on November 18, 2005.

*Applicant's Address:* 11901 Olive Blvd., St. Louis, MO 63141.

**Strong High-Yield Municipal Bond Fund, Inc.**

[File No. 811–7930]

*Summary:* Applicant seeks an order declaring that it has ceased to be an investment company. On December 29, 2004, applicant's Investor Class shares were redeemed for cash based on net asset value. On December 31, 2004, applicant's SCM Class shares were redeemed in-kind based on net asset value. Strong Capital Management, Inc. (''SCM''), applicant's investment adviser, has agreed to distribute any gains arising from the subsequent sale of the securities it received in the in-kind redemption of all shares of the SCM Class to Investor Class shareholders as of the liquidation date. Expenses of approximately $926,962 incurred in connection with the liquidation were paid by Strong Financial Corporation, the parent of SCM. Certain contingent rights, claims and liabilities of applicant relating to shareholder class actions and derivative actions involving late trading and market timing allegations were transferred to a liquidating trust for the benefit of applicant's former shareholders. Upon resolution of these claims by the liquidating trust, the trustees will distribute any net proceeds to former shareholders in a manner consistent with applicable law and the fiduciary duties of the trustees. In addition, applicant's former shareholders may be entitled to certain amounts paid pursuant to regulatory settlements of market-timing and related investigations. An independent distribution consultant was retained by SCM to oversee the distribution of these amounts to shareholders.

*Filing Dates:* The application was filed on April 21, 2005, and amended on October 24, 2005.

*Applicant's Address:* 100 Heritage Reserve, Menomonee Falls, WI 53051.

**The Brazilian Equity Fund, Inc.**

[File No. 811–6555]

*Summary:* Applicant, a closed-end investment company, seeks an order declaring that it has ceased to be an investment company. On November 14, 2005, applicant made a final liquidating distribution to its shareholders, based on net asset value. Applicant had paid $66,000 in expenses in connection with the liquidation. Applicant has retained $19,463 in cash to pay certain additional accrued expenses.

*Filing Dates:* The application was filed on November 1, 2005, and amended on November 23, 2005.

*Applicant's Address:* c/o Credit Suisse Asset Management, LLC, 466 Lexington Ave., 16th Floor, New York, NY 10017.

**BBH Common Settlement Fund II, Inc.**

[File No. 811–10421]

*Summary:* Applicant seeks an order declaring that it has ceased to be an investment company. By March 28, 2005, all shareholders of applicant had voluntarily redeemed their shares, based on net asset value. Applicant incurred no expenses in connection with the liquidation.

*Filing Dates:* The application was filed on August 19, 2005, and amended on November 23, 2005.

*Applicant's Address:* 40 Water St., Boston, MA 02109.

**Pictet Funds**

[File No. 811–9050]

*Summary:* Applicant seeks an order declaring that it has ceased to be an investment company. On September 15, 2004, applicant transferred its assets to Forward Global Emerging Markets Fund, a series of Forward Funds, Inc., based on net asset value. Expenses of $66,348 incurred in connection with the reorganization were paid by Forward Management, LLC, investment adviser to the acquiring fund.

*Filing Dates:* The application was filed on September 12, 2005, and amended on November 18, 2005.

*Applicant's Address:* c/o PFPC, Inc., 760 Moore Rd., King of Prussia, PA 19406.

**Bankers Life Insurance Company of New York Separate Account 1**

[File No. 811–8725]

*Summary:* Applicant seeks an order declaring that it has ceased to be an investment company. Applicant requests deregistration based on abandonment of registration. At the time of filing, Applicant had no shareholders or contractholders.

*Filing Date:* The application was filed on November 22, 2005.

*Applicant's Address:* 65 Froehlich Farm Blvd., Woodbury, NY 11797.

For the Commission, by the Division of Investment Management, pursuant to delegated authority.

**Jonathan G. Katz,**

*Secretary.*

[FR Doc. E5–8054 Filed 12–28–05; 8:45 am]

BILLING CODE 8010–01–P

## SECURITIES AND EXCHANGE COMMISSION

**[File No. 1–09700]**

### Issuer Delisting; Notice of Application of The Charles Schwab Corporation To Withdraw Its Common Stock, $.01 Par Value, From Listing and Registration on the New York Stock Exchange, Inc.

December 22, 2005.

On December 16, 2005, The Charles Schwab Corporation, a Delaware corporation (''Issuer''), filed an application with the Securities and Exchange Commission (''Commission''), pursuant to Section 12(d) of the Securities Exchange Act of 1934 (''Act'') [1] and Rule 12d2–2(d) thereunder,[2] to withdraw its common stock, $.01 par value (''Security''), from listing and registration on the New York Stock Exchange, Inc. (''NYSE'').

On December 9, 2005, the Board of Directors (''Board'') of the Issuer unanimously approved a resolution to withdraw the Security from listing and registration on NYSE and to continue to list the Security on the Nasdaq National Market (''Nasdaq''). The Issuer stated that it has determined that Nasdaq's electronic trading platform is the preferred marketplace for investors trading the Security.

The Issuer stated that it has complied with the requirements of NYSE's rules governing an issuer's voluntary withdrawal of a security from listing and registration by obtaining approval from the Board and by providing NYSE with a copy of the Board resolution prior to filing the application.

The Issuer's application relates solely to the withdrawal of the Security from listing on NYSE and from registration under Section 12(b) of the Act,[3] and shall not affect its obligation to be registered under Section 12(g) of the Act.[4]

Any interested person may, on or before January 17, 2006, comment on the facts bearing upon whether the application has been made in accordance with the rules of NYSE, and what terms, if any, should be imposed by the Commission for the protection of investors. All comment letters may be submitted by either of the following methods:

*Electronic Comments*

- Use the Commission's Internet comment form (*http://www.sec.gov/rules/delist.shtml*); or
- Send an e-mail to *rule-comments@sec.gov.* Please include the File Number 1–09700 or;

*Paper Comments*

- Send paper comments in triplicate to Jonathan G. Katz, Secretary, Securities and Exchange Commission, 100 F Street, NE., Washington, DC 20549–9303.

All submissions should refer to File Number 1–09700. This file number should be included on the subject line if e-mail is used. To help us process and review your comments more efficiently, please use only one method. The Commission will post all comments on the Commission's Internet Web site (*http://www.sec.gov/rules/delist.shtml*). Comments are also available for public inspection and copying in the Commission's Public Reference Room. All comments received will be posted without change; we do not edit personal identifying information from submissions. You should submit only information that you wish to make available publicly.

The Commission, based on the information submitted to it, will issue an order granting the application after the date mentioned above, unless the Commission determines to order a hearing on the matter.

For the Commission, by the Division of Market Regulation, pursuant to delegated authority.[5]

**Jonathan G. Katz,**

*Secretary.*

[FR Doc. E5–8049 Filed 12–28–05; 8:45 am]

BILLING CODE 8010–01–P

[1] 15 U.S.C. 78*l*(d).

[2] 17 CFR 240.12d2–2(d).

[3] 15 U.S.C. 78*l*(b).

[4] 15 U.S.C. 78*l*(g).

[5] 17 CFR 200.30–3(a)(1).

## SECURITIES AND EXCHANGE COMMISSION

**[File No. 1–07616]**

### Issuer Delisting; Notice of Application of Pioneer Kabushiki Kaisha (English Translation, Pioneer Corporation) To Withdraw Its Common Stock (Each Represented by One American Depositary Share), From Listing and Registration on the New York Stock Exchange, Inc.

December 22, 2005.

On December 13, 2005, Pioneer Kabushiki Kaisha (English translation, Pioneer Corporation), a company incorporated under the laws of Japan (''Issuer''), filed an application with the Securities and Exchange Commission (''Commission''), pursuant to Section 12(d) of the Securities Exchange Act of 1934 (''Act'') [1] and Rule 12d2–2(d) thereunder,[2] to withdraw its common stock (each represented by one American Depositary Share) (''Security''), from listing and registration on the New York Stock Exchange, Inc. (''NYSE'').

On December 8, 2005, the Board of Directors (''Board'') of the Issuer approved a resolution to withdraw the Security from listing and registration on the NYSE. The Issuer stated that the Board decided to withdraw the Security from listing on NYSE as part of a global restructuring of the Issuer's operations which includes, among other initiatives, maintaining the listing of the Security solely on the Tokyo Stock Exchange. The Issuer stated that the Security will continue to list on the Tokyo Stock Exchange, its principal trading market.

The Issuer stated in its application that it has complied with the NYSE's rules governing an issuer's voluntary withdrawal of a security from listing and registration by complying with all applicable laws in effect in Japan, and by providing the NYSE with the required documents governing the removal of securities from listing and registration on the NYSE.

The Issuer's application relates solely to the withdrawal of the Security from listing on NYSE and from registration under Section 12(b) of the Act,[3] and shall not affect its obligation to be registered under Section 12(g) of the Act.[4]

Any interested person may, on or before January 17, 2006, comment on the facts bearing upon whether the application has been made in

[1] 15 U.S.C. 78*l*(d).

[2] 17 CFR 240.12d2–2(d).

[3] 15 U.S.C. 78*l*(b).

[4] 15 U.S.C. 78*l*(g).

accordance with the rules of NYSE, and what terms, if any, should be imposed by the Commission for the protection of investors. All comment letters may be submitted by either of the following methods:

*Electronic Comments*

- Use the Commission's Internet comment form (*http://www.sec.gov/rules/delist.shtml*); or
- Send an e-mail to *rule-comments@sec.gov*. Please include the File Number 1–07616 or;

*Paper Comments*

- Send paper comments in triplicate to Jonathan G. Katz, Secretary, Securities and Exchange Commission, 450 Fifth Street, NW., Washington, DC 20549–0609.

All submissions should refer to File Number 1–07616. This file number should be included on the subject line if e-mail is used. To help us process and review your comments more efficiently, please use only one method. The Commission will post all comments on the Commission's Internet Web site (*http://www.sec.gov/rules/delist.shtml*). Comments are also available for public inspection and copying in the Commission's Public Reference Room. All comments received will be posted without change; we do not edit personal identifying information from submissions. You should submit only information that you wish to make available publicly.

The Commission, based on the information submitted to it, will issue an order granting the application after the date mentioned above, unless the Commission determines to order a hearing on the matter.

For the Commission, by the Division of Market Regulation, pursuant to delegated authority.[5]

**Jonathan G. Katz,**

*Secretary.*

[FR Doc. E5–8057 Filed 12–28–05; 8:45 am]

**BILLING CODE 8010–01–P**

[5] 17 CFR 200.30–3(a)(1).

## SECURITIES AND EXCHANGE COMMISSION

**[File No. 1–15196]**

## Issuer Delisting; Notice of Application of Provident Energy Trust To Withdraw Its Trust Units, No Par Value, From Listing and Registration on the American Stock Exchange LLC

December 22, 2005.

On December 8, 2005, Provident Energy Trust, an Alberta Trust, (''Issuer''), filed an application with the Securities and Exchange Commission (''Commission''), pursuant to Section 12(d) of the Securities Exchange Act of 1934 (''Act'')[1] and Rule 12d2–2(d) thereunder,[2] to withdraw its trust units, no par value (''Security''), from listing and registration on the American Stock Exchange LLC (''Amex'').

On October 11, 2005, the Board of Directors (''Board'') of the Issuer unanimously approved a resolution to withdraw the Security from listing on Amex and list the Security on the New York Stock Exchange, Inc. (''NYSE''). The Issuer stated that the Board believes moving to NYSE will provide greater access to capital markets, improve the visibility and liquidity of the Security, and provide a platform for anticipated future growth.

The Issuer stated in its application that it has met the requirements of Amex Rule 18 by complying with all applicable laws in effect in the Province of Alberta, Canada, in which it is organized, and by providing written notice of withdrawal to Amex.

The Issuer's application relates solely to the withdrawal of the Security from listing on Amex, and shall not affect its continued listing on NYSE or its obligation to be registered under Section 12(b) of the Act.[3]

Any interested person may, on or before January 17, 2006, comment on the facts bearing upon whether the application has been made in accordance with the rules of Amex, and what terms, if any, should be imposed by the Commission for the protection of investors. All comment letters may be submitted by either of the following methods:

*Electronic Comments*

- Use the Commission's Internet comment form (*http://www.sec.gov/rules/delist.shtml*); or
- Send an e-mail to *rule-comments@sec.gov*. Please include the File Number 1–15196 or;

*Paper Comments*

- Send paper comments in triplicate to Jonathan G. Katz, Secretary, Securities and Exchange Commission, 100 F Street, NE., Washington, DC 20549–9303.

All submissions should refer to File Number 1–15196. This file number should be included on the subject line if e-mail is used. To help us process and review your comments more efficiently, please use only one method. The Commission will post all comments on the Commission's Internet Web site (*http://www.sec.gov/rules/delist.shtml*). Comments are also available for public inspection and copying in the Commission's Public Reference Room. All comments received will be posted without change; we do not edit personal identifying information from submissions. You should submit only information that you wish to make available publicly.

The Commission, based on the information submitted to it, will issue an order granting the application after the date mentioned above, unless the Commission determines to order a hearing on the matter.

For the Commission, by the Division of Market Regulation, pursuant to delegated authority.[4]

**Jonathan G. Katz,**

*Secretary.*

[FR Doc. E5–8051 Filed 12–28–05; 8:45 am]

**BILLING CODE 8010–01–P**

[1] 15 U.S.C. 78*l*(d).

[2] 17 CFR 240.12d2–2(d).

[3] 15 U.S.C. 78*l*(b).

[4] 17 CFR 200.30–3(a)(1).

## SECURITIES AND EXCHANGE COMMISSION

**[Release No. 34–52994; File No. SR–Amex–2005–122]**

## Self-Regulatory Organizations; American Stock Exchange LLC; Notice of Filing and Immediate Effectiveness of a Proposed Rule Change and Amendment Nos. 1 and 2 Thereto Relating to Exchange Traded Fund Transaction Charges

December 21, 2005.

Pursuant to section 19(b)(1) of the Securities Exchange Act of 1934 (''Act'')[1] and Rule 19b–4 thereunder,[2] notice is hereby given that on November 29, 2005, the American Stock Exchange LLC (''Amex'' or ''Exchange'') filed with the Securities and Exchange Commission (''Commission'') the proposed rule change as described in Items I, II, and III below, which Items have been prepared by the Exchange. On December 14, 2005, the Amex submitted Amendment No. 1 to the proposed rule change. On December 21, 2005, the Amex submitted Amendment No. 2 to the proposed rule change. The Amex has designated this proposal, as amended, as one changing a fee imposed by the Amex under section 19(b)(3)(A)(ii) of the Act[3] and Rule 19b–4(f)(2) thereunder,[4] which renders the proposal effective upon filing with the

[1] 15 U.S.C. 78s(b)(1).

[2] 17 CFR 240.19b–4.

[3] 15 U.S.C. 78s(b)(3)(A)(ii).

[4] 17 CFR 240.19b–4(f)(2).

Commission. The Commission is publishing this notice to solicit comments on the proposed rule change, as amended, from interested persons.

## I. Self-Regulatory Organization's Statement of the Terms of Substance of the Proposed Rule Change

The Amex proposes to revise a variety of transaction fees that Exchange members are charged for executions on the Exchange in connection with transactions in exchange traded fund shares (''ETFs'') and trust issued receipts (''TIRs'') (collectively, ''Exchange Traded Funds''). The text of the proposed rule change, as amended, is available on the Amex's Web site (*http://www.amex.com*), at the Amex's Office of the Secretary, and at the Commission's Public Reference Room.

## II. Self-Regulatory Organization's Statement of the Purpose of, and Statutory Basis for, the Proposed Rule Change

In its filing with the Commission, the Amex included statements concerning the purpose of and basis for the proposed rule change, as amended, and discussed any comments it received on the proposed rule change. The text of these statements may be examined at the places specified in Item IV below. The Amex has prepared summaries, set forth in sections A, B, and C below, of the most significant aspects of such statements.

### *A. Self-Regulatory Organization's Statement of the Purpose of, and Statutory Basis for, the Proposed Rule Change*

1. Purpose

The Amex proposes to revise its Equity Fee Schedule and its Exchange Traded Funds and Trust Issued Receipts Fee Schedule (the ''ETF/TIR Fee Schedule'') to revise the transaction fees applicable to Exchange members in connection with Exchange Traded Funds. The Amex states that these fee changes will be assessed on Exchange members commencing December 1, 2005.

For the purpose of clarity, the Exchange proposes to eliminate in the Equity Fee Schedule references to Exchange Traded Funds, as applicable. Those sections of the Equity Fee Schedule that relate solely to Exchange Traded Funds will be deleted and, if necessary, added to the ETF/TIR Fee Schedule. In this manner, equities and Exchange Traded Funds will now have separate and distinct fee schedules.

The Exchange proposes the following changes to the ETF/TIR Fee Schedule: (i) adoption of transaction charges for all market participants of $0.34 per 100 shares per trade for all Exchange Traded Funds (except the SPDR O-Strip); (ii) adoption of transaction charges for all market participants of $0.50 per 100 shares per trade in connection with the SPDR O-Strip; (iii) elimination of customer transaction charge fee waivers for the ETFs listed in Note 2 to the Equity Fee Schedule and Note 3 of the ETF/TIR Fee Schedule; (iv) elimination of the fee suspensions for specialists, registered traders and broker-dealers in connection with iShares Lehman 1–3 Year Treasury Bond Fund (''SHY''), iShares Lehman 7–10 Year Treasury Bond Fund (''IEF''), iShares Lehman 20+ Year Treasury Bond Fund (''TLT'') and iShares Goldman Sachs InvestTop Corporate Bond Fund (''LQD''); (v) elimination of the transaction fee waivers in connection with ETFs that are executed as part of an exchange-for-physical transaction (''EFP''); (vi) addition of the ''Order Cancellation Fee'' previously set forth only in the Equity Fee Schedule; (vii) reduction of the current exemption for transaction charges for electronic orders from up to 5,099 shares to up to 2,400 shares; and (viii) renaming of the ''Regulatory Fee'' as the ''Value Based Fee.''

The Amex currently charges members transaction fees on a per trade basis for Exchange Traded Funds transactions executed on the Exchange. The current transaction charges are shown in the table below.

| | Specialists | Registered traders | Customer/broker-dealer (off-floor) |
|---|---|---|---|
| **I. Transaction Charges for ETFs Without Unreimbursed Fees to a Third Party** | | | |
| Per Share Side | $0.0033 ($0.33 per 100 shares) | $0.0036 ($.36 per 100 shares) | $0.0060 ($.60 per 100 shares) |
| Subject to the following per trade maximums. | $300 (90,909 shares) | $300 (83,333 shares) | $100 (16,667 shares). |
| **II. Transaction Charges for ETFs for which the Exchange Pays Unreimbursed Fees to a Third Party** | | | |
| Per Share Side | $0.0037 ($0.37 per 100 shares) | $0.0038 ($0.50 per 100 shares) | $0.0060 ($.60 per 100 shares) |
| Subject to the following per trade maximums. | $300 (81,081 shares) | $300 (78,947 shares) | $100 (16,667 shares). |
| **III. Transaction Charges for SPDR O-Strip** | | | |
| Per Share Side | $0.0050 ($0.50 per 100 shares | $0.0050 ($0.50 per 100 shares) | $0.0060 |
| Subject to the following per trade maximums. | $300 (60,000 shares) | $300 (60,000 shares) | $100 (16,667 shares). |
| **IV. Transaction Charges for iShares FTSE/Xinhua China 25 Index Fund** | | | |
| Per Share Side | $0.0039 ($0.39 per 100 shares) | $0.0042 ($0.42 per 100 shares) | $0.0060 |
| Subject to the following per trade maximums. | $300 (76,923 shares) | $300 (71,428 shares) | $100 (16,667 shares). |
| The proposed revision to the per trade transaction charge in connection with Exchange Traded Funds executed on the Exchange are set forth below. | | | |
| **I. Transaction Charges for ETFs/TIRs (except the SPDR O-Strip)** | | | |
| Per Share Side | $0.0034 ($0.34 per 100 shares) | $0.0034 ($.34 per 100 shares) | $0.0034 ($.34 per 100 shares) |
| Subject to the following per trade maximums. | $300 (88,235 shares) | $300 (88,235 shares) | $100 (29,411 shares). |

| | Specialists | Registered traders | Customer/broker-dealer (off-floor) |
|---|---|---|---|
| **II. Transaction Charges for SPDR O-Strip** | | | |
| Per Share Side | $0.0050 ($0.50 per 100 shares) | $0.0050 ($.50 per 100 shares) | $0.0050 ($.50 per 100 shares) |
| Subject to the following per trade maximums. | $300 (60,000 shares) | $300 (60,000 shares) | $100 (20,000 shares). |

The Exchange is proposing to clarify and simplify transaction charges applicable to Exchange Traded Funds that affect members and market participants. In particular, the Exchange believes that the proposal will attract additional order flow as a result of the reduction in the per share rate charge, especially in connection with customer and broker-dealer orders. Currently, the per share rate charge for customers and broker-dealer orders is $0.0060, or $0.60 per 100 shares. The proposal will significantly reduce this charge by $0.0026 per share to $0.0034 per share, or $0.34 per 100 shares. The Exchange believes that order flow providers will find this transaction fee reduction attractive.

The Exchange is proposing to adopt a uniform Exchange Traded Fund transaction fee that is attractive to market participants and easier to calculate and administer. As stated above, the proposed transaction fee applicable to Exchange Traded Funds (except the SPDR O-Strip) will be $0.0034 per share, or $0.34 per 100 shares, subject to the existing fee cap per trade. The current transaction charge per trade is capped at $300 for specialists and registered traders and $100 for broker-dealers and customers. In connection with the SPDR O-Strip, the Exchange states that it proposes to levy a higher transaction charge due to a more expensive license agreement than is typically found in other ETFs. Specifically, the proposed transaction fee applicable to the SPDR O-Strip will be $0.0050 per share, or $0.50 per 100 shares, subject to the existing fee cap per trade. The current transaction charge per trade is capped at $300 for specialists and registered traders and $100 for broker-dealers and customers. In addition, specialist transaction charges will continue to be capped at $400,000 per month per specialist unit.

For clarity and ease of administration, the Exchange believes that the elimination of various transaction fee waivers is warranted. As a result, customer transaction charge fee waivers for the ETFs listed in Note 2 of the Equity Fee Schedule and Note 3 of the ETF/TIR Fee Schedule; fee suspensions for specialists, registered traders, and broker-dealers in connection with SHY, IEF, TLT, and LQD; and transaction fee waivers in connection with ETFs that are executed as part of an EFP will be terminated in connection with this proposal. The existing specialist fee waiver in connection with QQQQ trades will continue to apply and will expire as expected on December 31, 2005.[5]

The ''Order Cancellation Fee'' applicable to Exchange Traded Funds is currently set forth in the Equity Fee Schedule.[6] In order to provide a ''stand alone'' fee schedule for Exchange Traded Funds, the ''Order Cancellation Fee'' section in the Equity Fee Schedule will also be set forth in the ETF/TIR Fee Schedule.

The Exchange further proposes that orders entered electronically into the Amex Order File from off the Floor (''System Orders'') for up to 2,400 shares in Exchange Traded Funds will not be assessed a transaction charge. The current ETF/TIR Fee Schedule provides that up to 5,099 shares in Exchange Traded Funds are not assessed a transaction charge. As is the case in the existing Fee Schedule, this provision does not apply to System Orders of a member or member organization trading as an agent for the account of a non-member competing market maker.[7] Therefore, this limited fee exemption is not available to non-member competing market makers.[8] The Amex states that this limited fee exemption was originally intended to attract ''smaller orders'' to the Exchange. However, as the size of orders that are deemed ''small'' continues to decrease, the Exchange believes that the proposed modification to the transaction fee exemption will reflect this reality. In addition, the Exchange submits that reducing the fee exemption for System Orders from 5,099 shares to 2,400 shares should help generate additional revenue to fund Exchange operations.

The Exchange has also proposed to change the name of the ''Regulatory Fee'' to ''Value Based Fee.''[9] As with the current ''Regulatory Fee,'' the Amex states that the ''Value Based Fee'' will only be applied to System Orders entered by a member or member organization trading as agent for the account of a non-member competing market maker.[10] The rate of the fee (.000075) also will not change. The Exchange submits that changing the name of the ''Regulatory Fee'' to ''Value Based Fee'' better reflects the intent and type of this fee. The System Orders of all other market participants will continue to not be subject to this Value Based Fee. The Exchange states that the proposed language set forth under the ''Value Based Fee'' Section is identical in operation and meaning to the existing text of the ''Regulatory Fee.'' Accordingly, the Exchange states that the operation of the ''Value Based Fee'' will be applied identically to the current ''Regulatory Fee'' in the ETF/TIR Fee Schedule.

The Exchange believes that the proposed revision to Exchange Traded Funds transaction fees will benefit the Exchange by providing greater incentive for market participants to send order flow to the Amex. In addition, the revision also clarifies the transaction fees that market participants will be charged for transactions in Exchange Traded Funds due to the elimination of various fee waivers that are currently part of the ETF/TIR Fee Schedule.

The Exchange submits that this proposal to revise Exchange Traded Funds transaction fees applicable to Exchange members is consistent with section 6(b)(4) of the Act.[11] The Exchange believes that the proposal provides for an equitable allocation of reasonable fees among Exchange members largely through the adoption of a uniform transaction fee for Exchange Traded Funds and the elimination of various fee waivers. In addition, the Exchange expects the

[5] *See* Securities Exchange Act Release No. 52736 (November 4, 2005), 70 FR 69171 (November 14, 2005).

[6] *See* Securities Exchange Act Release No. 52533 (September 29, 2005), 70 FR 58496 (October 6, 2005) (SR–Amex–2005–085).

[7] The Amex states that a ''competing market maker'' is defined as a specialist or market maker registered as such on a registered stock exchange (other than the Amex), or a market maker bidding and offering over-the-counter, in an Amex-traded security.

[8] The Exchange states that it intends to revise its rules to conform to Rule 610 of Regulation NMS prior to the compliance date of such rule.

[9] The Exchange submits that its regulatory obligations are funded by numerous sources.

[10] The Exchange states that it intends to revise its rules to conform to Rule 610 of Regulation NMS prior to the compliance date of such rule.

[11] 15 U.S.C. 78f(b)(4).

proposal to attract additional order flow largely due to the simplification and reduction of per share fee rates, especially in connection with customer and broker-dealer orders. Therefore, the Exchange maintains that the proposed Exchange Traded Funds transaction fee changes, in the aggregate, are an equitable allocation of reasonable fees among Exchange members.

2. Statutory Basis

The Exchange believes that the proposed rule change, as amended, is consistent with section 6(b) of the Act,[12] in general, and furthers the objectives of section 6(b)(4) of the Act,[13] in particular, in that it is intended to assure the equitable allocation of reasonable dues, fees, and other charges among its members and issuers and other persons using its facilities.

*B. Self-Regulatory Organization's Statement on Burden on Competition*

The Exchange does not believe that the proposed rule change, as amended, will impose any inappropriate burden on competition not necessary or appropriate in furtherance of the purposes of the Act.

*C. Self-Regulatory Organization's Statement on Comments on the Proposed Rule Change Received From Members, Participants, or Others*

No written comments were either solicited or received.

**III. Date of Effectiveness of the Proposed Rule Change and Timing for Commission Action**

The foregoing proposed rule change, as amended, has been designated as a fee change pursuant to section 19(b)(3)(A)(ii) of the Act [14] and Rule 19b–4(f)(2) [15] thereunder, because it establishes or changes a due, fee, or other charge imposed by the Exchange. Accordingly, the proposal, as amended, will take effect upon filing with the Commission. At any time within 60 days of the filing of such proposed rule change the Commission may summarily abrogate such rule change if it appears to the Commission that such action is necessary or appropriate in the public interest, for the protection of investors, or otherwise in furtherance of the purposes of the Act.[16]

**IV. Solicitation of Comments**

Interested persons are invited to submit written data, views, and arguments concerning the foregoing, including whether the proposed rule change, as amended, is consistent with the Act. Comments may be submitted by any of the following methods:

*Electronic Comments*

- Use the Commission's Internet comment form (*http://www.sec.gov/rules/sro.shtml*); or
- Send an e-mail to *rule-comments@sec.gov.* Please include File Number SR–Amex–2005–122 on the subject line.

*Paper Comments*

- Send paper comments in triplicate to Jonathan G. Katz, Secretary, Securities and Exchange Commission, 100 F Street, NE., Washington, DC 20549–9303.

All submissions should refer to File Number SR–Amex–2005–122. This file number should be included on the subject line if e-mail is used. To help the Commission process and review your comments more efficiently, please use only one method. The Commission will post all comments on the Commission's Internet Web site (*http://www.sec.gov/rules/sro.shtml*). Copies of the submission, all subsequent amendments, all written statements with respect to the proposed rule change, as amended, that are filed with the Commission, and all written communications relating to the proposed rule change between the Commission and any person, other than those that may be withheld from the public in accordance with the provisions of 5 U.S.C. 552, will be available for inspection and copying in the Commission's Public Reference Room. Copies of such filing also will be available for inspection and copying at the principal office of the Amex. All comments received will be posted without change; the Commission does not edit personal identifying information from submissions. You should submit only information that you wish to make available publicly. All submissions should refer to File Number SR–Amex–2005–122 and should be submitted on or before January 19, 2006.

For the Commission, by the Division of Market Regulation, pursuant to delegated authority.[17]

**Jonathan G. Katz,**

*Secretary.*

[FR Doc. E5–8059 Filed 12–28–05; 8:45 am]

BILLING CODE 8010–01–P

[12] 15 U.S.C. 78f(b).

[13] 15 U.S.C. 78f(b)(4).

[14] 15 U.S.C. 78s(b)(3)(A)(ii).

[15] 17 CFR 240.19b–4(f)(2).

[16] The effective date of the original proposed rule change is November 29, 2005, the effective date of Amendment No. 1 is December 14, 2005, and the effective date of Amendment No. 2 is December 21, 2005. For purposes of calculating the 60-day period within which the Commission may summarily abrogate the proposed rule change, as amended, under Section 19(b)(3)(C) of the Act, the Commission considers the period to commence on December 21, 2005, the date on which the Exchange submitted Amendment No. 2. *See* 15 U.S.C. 78s(b)(3)(C).

[17] 17 CFR 200.30–3(a)(12).

## SECURITIES AND EXCHANGE COMMISSION

**[Release No. 34–53015; File No. SR–BSE–2005–52]**

## Self-Regulatory Organizations; Boston Stock Exchange, Inc.; Notice of Filing of Proposed Rule Change and Amendment No. 1 Thereto Relating to the Directed Orders Process on the Boston Options Exchange

December 22, 2005.

Pursuant to Section 19(b)(1) of the Securities Exchange Act of 1934 (the ''Act''),[1] and Rule 19b–4 thereunder,[2] notice is hereby given that on November 25, 2005, the Boston Stock Exchange, Inc. (''BSE'' or ''Exchange'') filed with the Securities and Exchange Commission (''Commission'') the proposed rule change as described in Items I, II, and III below, which Items have been prepared by the BSE. On December 20, 2005, BSE filed Amendment No. 1 to the proposed rule change.[3] The Commission is publishing this notice to solicit comments on the proposed rule change, as amended, from interested persons.

**I. Self-Regulatory Organization's Statement of the Terms of Substance of the Proposed Rule Change**

The Exchange proposes to amend the rules of the Boston Options Exchange (''BOX'') to clarify the information contained in a ''Directed Order'' on BOX. The text of the proposed rule change is available on the BOX's Web site (*http://www.bostonoptions.com*), at the principal office of BOX, and at the Commission's Public Reference Room.

**II. Self-Regulatory Organization's Statement of the Purpose of, and Statutory Basis for, the Proposed Rule Change**

In its filing with the Commission, the BSE included statements concerning the purpose of, and basis for, the proposed rule change and discussed any comments it received on the proposed

[1] 15 U.S.C. 78s(b)(1).

[2] 17 CFR 240.19b–4.

[3] Amendment No. 1 amends the rule text to include additional language in Chapter V, Section 14(e) of the BOX Rules clarifying that the identities of Options Participants that send Directed Orders to the Trading Host are not anonymous.

rule change. The text of these statements may be examined at the places specified in Item IV below. The BSE has prepared summaries, set forth in Sections A, B, and C below, of the most significant aspects of such statements.

*A. Self-Regulatory Organization's Statement of the Purpose of, and Statutory Basis for, the Proposed Rule Change*

1. Purpose

BSE seeks to clarify the information contained in a ''Directed Order'' on BOX. Market Makers are able to handle orders on an agency basis directed to them by Order Flow Providers (''OFPs''). In Chapter I, Section 1 of the BOX Rules, a Directed Order is defined as a Customer order directed to a Market Maker by an OFP. An OFP sends a Directed Order to BOX with a designation of the Market Maker to whom the order is to be directed. BOX then routes the Directed Order to the appropriate Market Maker. Under Chapter VI, Section 5(c)(ii) of the BOX Rules, a Market Maker only has two choices when he receives a Directed Order: (1) Submit the order to the PIP process; or (2) send the order back to BOX for placement onto the BOX Book.

The BSE proposes to amend Chapter V, Section 14(e) and Chapter VI, Section 5(c)(i) of the BOX Rules to clarify that unlike all other orders submitted to the BOX Trading Host, Directed Orders are not anonymous.[4] The Options Participant identification number (''Participant ID'') of the OFP sending the Directed Order will be revealed to the Market Maker recipient. The Market Maker must submit this Participant ID to BOX whenever the Market Maker chooses to submit the Directed Order and his Primary Improvement Order to the PIP process. However, once the Directed Order is submitted to the PIP process or the BOX Book, the Participant ID is not shown to any market participant and the identity of the OFP will be anonymous pursuant to Chapter V, Section 14(e) of the BOX Rules.

Chapter VI, Section 5(c)(i) of the BOX Rules prohibits a Market Maker from rejecting a Directed Order. The BSE wishes to clarify that upon systematically indicating its desire to accept Directed Orders, a Market Maker that receives a Directed Order is not permitted, under any circumstances, to reject the receipt of the Directed Order from the BOX Trading Host nor reject the Directed Order back to the OFP who sent it. A Market Maker who desires to accept Directed Orders must systemically indicate that it is an Executing Participant (''EP'') whenever the Market Maker wishes to receive Directed Orders from the BOX Trading Host. If a Market Maker does not systemically indicate that it is an EP, then the BOX Trading Host will not forward any Directed Orders to that Market Maker. In such a case, the BOX Trading Host will send the order directly to the BOX Book.

Other Clarifying Rule Change Relating to Directed Orders

Currently, Chapter V, Section 14(e) of the BOX Rules states that the identity of Options Participants who submit orders to the Trading Host will remain anonymous to market participants at all times, except during error resolution or through the normal clearing process as set forth in Chapter V, Section 16(a)(vi) of the BOX Rules. The BSE proposes to amend Chapter V, Section 14(e) of the BOX Rules and add new Supplementary Material .01 to Chapter V, Section 14(e) to clarify that the Participant ID of an OFP who submits orders to the Trading Host for use in the Directed Order process will be revealed to the Market Maker who receives such Directed Orders as set forth in Chapter VI, Section 5(c) of the BOX Rules.

2. Statutory Basis

The Exchange believes that the proposed rule change, as amended, is designed to clarify the information contained in a Directed Order. This clarification will allow Options Participants to make better informed decisions in determining when and how to use the Directed Order process. Accordingly, the Exchange believes that the proposal is consistent with the requirements of Section 6(b) of the Act,[5] in general, and Section 6(b)(5) of the Act,[6] in particular, in that it is designed to foster cooperation and coordination with persons engaged in regulating, clearing, settling, processing information with respect to, and facilitating transaction in securities, to remove impediments to and perfect the mechanism for a free and open market and a national market system, and, in general, to protect investors and the public interest.

*B. Self-Regulatory Organization's Statement on Burden on Competition*

The Exchange does not believe that the proposed rule change will impose any burden on competition not necessary or appropriate in furtherance of the purposes of the Act.

*C. Self-Regulatory Organization's Statement on Comments on the Proposed Rule Change Received From Members, Participants or Others*

The Exchange has neither solicited nor received comments on the proposed rule change.

**III. Date of Effectiveness of the Proposed Rule Change and Timing for Commission Action**

Within 35 days of the date of publication of this notice in the **Federal Register** or within such longer period (i) as the Commission may designate up to 90 days of such date if it finds such longer period to be appropriate and publishes its reasons for so finding or (ii) as to which BSE consents, the Commission shall: (a) by order approve such proposed rule change, or (b) institute proceedings to determine whether the proposed rule change should be disapproved.

**IV. Solicitation of Comments**

Interested persons are invited to submit written data, views, and arguments concerning the foregoing, including whether the proposed rule change, as amended, is consistent with the Act. Comments may be submitted by any of the following methods:

*Electronic Comments*

- Use the Commission's Internet comment form (*http://www.sec.gov/rules/sro.shtml*); or
- Send an e-mail to *rule-comments@sec.gov.* Please include File No. SR–BSE–2005–52 on the subject line.

*Paper Comments*

- Send paper comments in triplicate to Jonathan G. Katz, Secretary, Securities and Exchange Commission, Station Place, 100 F Street, NE., Washington, DC 20549–9303.

All submissions should refer to File Number SR–BSE–2005–52. This file number should be included on the subject line if e-mail is used. To help the Commission process and review your comments more efficiently, please use only one method. The Commission will post all comments on the Commission's Internet Web site (*http://www.sec.gov/rules/sro.shtml*). Copies of the submission, all subsequent amendments, all written statements

[4] Telephone conversation between Jan Woo, Attorney, Division of Market Regulation, Commission, and William C. Meehan, Head of Regulation & Compliance, BOX, on December 22, 2005.

[5] 15 U.S.C. 78f(b).

[6] 15 U.S.C. 78f(b)(5).

with respect to the proposed rule change that are filed with the Commission, and all written communications relating to the proposed rule change between the Commission and any person, other than those that may be withheld from the public in accordance with the provisions of 5 U.S.C. 552, will be available for inspection and copying in the Commission's Public Reference Room. Copies of such filing also will be available for inspection and copying at the principal office of the BOX. All comments received will be posted without change; the Commission does not edit personal identifying information from submissions. You should submit only information that you wish to make available publicly. All submissions should refer to File Number SR–BSE–2005–52 and should be submitted on or before January 19, 2006.

For the Commission, by the Division of Market Regulation, pursuant to delegated authority.[7]

**Jonathan G. Katz,**

*Secretary.*

[FR Doc. E5–8043 Filed 12–28–05; 8:45 am]

**BILLING CODE 8010–01–P**

---

## SECURITIES AND EXCHANGE COMMISSION

**[Release No. 34–53016; File No. SR–CBOE–2005–107]**

## Self-Regulatory Organizations; Chicago Board Options Exchange, Incorporated; Notice of Filing and Immediate Effectiveness of a Proposed Rule Change Relating to its Marketing Fee Program

December 22, 2005.

Pursuant to Section 19(b)(1) of the Securities Exchange Act of 1934 (''Act'')[1] and Rule 19b–4 thereunder,[2] notice is hereby given that on December 9, 2005, the Chicago Board Options Exchange, Incorporated (''CBOE'' or ''Exchange'') filed with the Securities and Exchange Commission (''Commission'') the proposed rule change as described in Items I, II, and III below, which Items have been prepared by the Exchange. The CBOE has designated this proposal as one establishing or changing a due, fee, or other charge imposed by the CBOE under Section 19(b)(3)(A)(ii) of the Act[3] and Rule 19b–4(f)(2) thereunder,[4] which renders the proposal effective upon filing with the Commission. The Commission is publishing this notice to solicit comments on the proposed rule change from interested persons.

### I. Self-Regulatory Organization's Statement of the Terms of Substance of the Proposed Rule Change

The CBOE proposes to amend its Fees Schedule and its marketing fee program. The Exchange states that these changes to the marketing fee program would be effective December 12, 2005, and would continue until June 2, 2006.

Below is the text of the proposed rule change. Proposed new language is in *italics*; proposed deletions are in [brackets].

Chicago Board Options Exchange, Inc.—Fees Schedule

[December 1] *December 9*, 2005

1. No Change.
2. MARKETING FEE (6)(16): $[.22].*65*
3.–4. No Change.

FOOTNOTES:

(1)–(5) No Change.

(6) *Commencing on December 12, 2005*, [T]*t*he Marketing Fee will be assessed only on transactions of Market-Makers, RMMs, e-DPMs, DPMs, and LMMs *resulting from orders for less than 1,000 contracts (i) from payment accepting firms, or (ii) that have designated a ''Preferred Market-Maker'' under CBOE Rule 8.13* at the rate of [$.22] *$.65* per contract on all classes of equity options, options on HOLDRs, options on SPDRs, and options on DIA. The fee will not apply to Market-Maker-to-Market-Maker transactions *or transactions resulting from P/A orders.* This fee shall not apply to index options and options on ETFs (other than options on SPDRs and options on DIA). If less than 80% of the marketing fee funds are paid out by the DPM/*LMM* or [LMM] *Preferred Market-Maker* in a given month, then the Exchange would refund such surplus at the end of the month on a pro rata basis based upon contributions made by the Market-Makers, RMMs, e-DPMs, DPMs and LMMs. However, if 80% or more of the accumulated funds in a given month are paid out by the DPM/*LMM* or [LMM] *Preferred Market-Maker*, there will not be a rebate for that month and the funds will carry over and will be included in the pool of funds to be used by the DPM/*LMM* or [LMM] *Preferred Market-Maker* the following month. At the end of each quarter, the Exchange would then refund any surplus, if any, on a pro rata basis based upon contributions made by the Market-Makers, RMMs, DPMs, e-DPMs and LMMs. CBOE's marketing fee program as described above will be in effect until June 2, 2006.

Remainder of Fees Schedule—No change.

### II. Self-Regulatory Organization's Statement of the Purpose of, and Statutory Basis for, the Proposed Rule Change

In its filing with the Commission, the CBOE included statements concerning the purpose of and basis for the proposed rule change, and discussed any comments it received on the proposed rule change. The text of these statements may be examined at the places specified in Item IV below. The CBOE has prepared summaries, set forth in Sections A, B, and C below, of the most significant aspects of such statements.

*A. Self-Regulatory Organization's Statement of the Purpose of, and Statutory Basis for, the Proposed Rule Change*

1. Purpose

On November 2, 2005, the CBOE amended its marketing fee program in a number of respects in light of the recent adoption of its Preferred Market-Maker program.[5] In particular, the CBOE amended its marketing fee program to provide that a Market-Maker will have access to the marketing fee funds generated by orders sent to the Exchange designating that Market-Maker as a ''Preferred Market-Maker.'' The CBOE now proposes to amend its marketing fee program, which changes would be effective December 12, 2005, and would continue until June 2, 2006 (which is the same date that the CBOE's Preferred Market-Maker program is scheduled to expire, unless extended).[6]

*Current Marketing Fee Program*

The current marketing fee is assessed upon Designated Primary Market-Makers (''DPMs''), Electronic DPMs (''e-DPMs''), Remote Market-Makers (''RMMs''), Lead Market-Makers (''LMMs''), and Market-Makers at a rate

---

[7] 17 CFR 200.30–3(a)(12).

[1] 15 U.S.C. 78s(b)(1).

[2] 17 CFR 240.19b–4.

[3] 15 U.S.C. 78s(b)(3)(A)(ii).

[4] 17 CFR 240.19b–4(f)(2).

[5] The Exchange states that, under its Preferred Market-Maker program, order providers can send an order to the Exchange designating any CBOE Market-Maker (including any DPM, e-DPM, LMM, RMM, and Market-Maker) as a Preferred Market-Maker. If the Preferred Market-Maker is quoting at the NBBO at the time the order is received on CBOE, the Preferred Market-Maker is entitled to a participation entitlement of 50% when there is one Market-Maker also quoting at the best bid/offer on the Exchange and 40% when there are two or more Market-Makers quoting at the best bid/offer on the Exchange. *See* Securities Exchange Act Release No. 52506 (September 23, 2005), 70 FR 57340 (September 30, 2005) (SR–CBOE–2005–58).

[6] *See* CBOE Rule 8.13.

of $0.22 for every contract they enter into on the Exchange other than Market-Maker-to-Market-Maker transactions (which includes all transactions between any combination of DPMs, e-DPMs, RMMs, LMMs, and Market-Makers).[7] The marketing fee is assessed in all equity option classes and options on HOLDRs®, options on SPDRs®, and options on DIA. The following is a description of the three-step process by which the entire pool of funds generated by the marketing fee is apportioned between the DPM or LMM, and Preferred Market-Makers.

First, each month all funds generated by the marketing fee are collected by the Exchange and recorded according to the DPM or LMM, as applicable, station, and class where the option classes subject to the fee are traded. If a Market-Maker (including any DPM, e-DPM, LMM, and RMM) is designated as a Preferred Market-Maker on an order from a payment accepting firm (''PAF''), the Market-Maker will be given access to the marketing fee funds generated from that order, even if the Preferred Market-Maker did not participate in the execution of the order because the Market-Maker was not quoting at the NBBO at the time the order was received on the CBOE.

Second, the DPM or LMM, as applicable, are given access to the marketing fee funds generated from all other orders from PAFs in its appointed classes in a particular trading station.

Third, the marketing fee funds generated by orders from non-PAFs, if any, are apportioned monthly among the DPM or LMM, and Preferred Market-Makers on a on a pro-rata basis, based on the percentage of contracts traded by each DPM or LMM, and Preferred Market-Maker against orders from PAFs during the month in the option classes located at a particular trading station.

*Revised Marketing Fee Program—Effective December 12, 2005*

Effective December 12, 2005, the CBOE proposes to amend the fee such that it is assessed upon DPMs, LMMs, e-DPMs, RMMs, and Market-Makers at the rate of $.65 per contract on transactions of Market-Makers, RMMs, e-DPMs, DPMs, and LMMs resulting from orders for less than 1,000 contracts (i) from payment accepting firms (''PAF''), or (ii) that have designated a ''Preferred Market-Maker'' under CBOE Rule 8.13 (''Preferred orders''). The Exchange states that Market-Maker-to-Market-Maker transactions (which include all transactions between any combination of DPMs, e-DPMs, RMMs, LMMs, and Market-Makers) would continue to be excluded from the fee, and the CBOE would also now exclude transactions of Market-Makers, RMMs, e-DPMs, DPMs, and LMMs resulting from inbound P/A orders. The marketing fee would also continue to be assessed in all equity option classes and options on HOLDRs®, options on SPDRs®, and options on DIA.

The following is a description of the manner in which funds generated by the marketing fee would be allocated between the DPM or LMM, and Preferred Market-Makers.

First, if a Market-Maker (including any DPM, e-DPM, LMM, and RMM) is designated as a Preferred Market-Maker on an order for less than 1,000 contracts, the Market-Maker would be given access to the marketing fee funds generated from the Preferred order, even if the Preferred Market-Maker did not participate in the execution of the Preferred order because the Market-Maker was not quoting at the NBBO at the time the Preferred order was received on the CBOE.[8]

Second, the DPM or LMM, as applicable, would be given access to the marketing fee funds generated from all other orders for less than 1,000 contracts from PAFs in its appointed classes in a particular trading station.

The Exchange states that, as in the current program, the money collected would be disbursed by the Exchange according to the instructions of the DPM, LMM, or Preferred Market-Maker. These funds could only be used to attract order flow to CBOE, and the funds made available to the DPM or LMM could only be used to attract orders in the option classes located at the trading station where the fee was assessed. Thus, a member organization appointed as the DPM at a particular trading station on the trading floor could not use the funds from that trading station to attract order flow to another trading station on the trading floor where that member organization serves as the DPM.

With respect to the rebate provisions of its marketing fee program, the Exchange states that currently, if a Preferred Market-Maker does not disburse all of the funds generated by the marketing fee in a given month, then the funds the Preferred Market-Maker does not disburse are made available to the DPM or LMM, as applicable, for the following month to attract orders in the classes of options where the DPM or LMM is appointed. Going forward, the CBOE proposes to allow the Preferred Market-Maker to carry-over any funds it does not disburse in a given month to the same extent a DPM or LMM is permitted to do so.

Thus, the Exchanges states that its marketing fee program as amended would provide that if less than 80% of the marketing fee funds are paid out by the DPM/LMM or Preferred Market-Maker in a given month, then the Exchange would refund such surplus at the end of the month on a pro rata basis based upon contributions made by the Market-Makers, RMMs, e-DPMs, DPMs, and LMMs. However, if 80% or more of the accumulated funds in a given month are paid out by the DPM/LMM or Preferred Market-Maker, there would not be a rebate for that month and the funds will carry over and would be included in the pool of funds to be used by the DPM/LMM or Preferred Market-Maker the following month. At the end of each quarter, the Exchange states that it would then refund any surplus, if any, on a pro rata basis based upon contributions made by the Market-Makers, RMMs, DPMs, e-DPMs, and LMMs.

The Exchange states that it would not be involved in the determination of the terms governing the orders that qualify for payment or the amount of any such payment. The Exchange states that it would provide administrative support for the program in such matters as maintaining the funds, keeping track of the number of qualified orders each firm directs to the Exchange, and making the necessary debits and credits to reflect the payments that are made. The CBOE states that its Market-Makers, RMMs, DPMs, e-DPMs, and LMMs would have no way of identifying prior to execution whether a particular order is from a PAF or is an order designating a Preferred Market-Maker.

2. Statutory Basis

The Exchange believes that its proposal is consistent with Section 6(b) of the Act,[9] in general, and furthers the objectives of Section 6(b)(4) of the Act,[10] in particular, in that it is designed to provide for the equitable allocation of reasonable dues, fees, and other charges among its members and other persons using its facilities.

[7] *See* Securities Exchange Act Release No. 52818 (November 22, 2005), 70 FR 71568 (November 29, 2005) (SR–CBOE–2005–91).

[8] For example, assume a Market-Maker is designated as a Preferred Market-Maker on an order for 50 contracts which is executed on CBOE. Under this first step, the Preferred Market-Maker would be given access to a total of $32.50 (50 contracts × $.65), whether or not the Preferred Market-Maker traded with the order or not.

[9] 15 U.S.C. 78f(b).

[10] 15 U.S.C. 78f(b)(4).

*B. Self-Regulatory Organization's Statement on Burden on Competition*

The Exchange does not believe that the proposed rule change will impose any inappropriate burden on competition not necessary or appropriate in furtherance of the purposes of the Act.

*C. Self-Regulatory Organization's Statement on Comments on the Proposed Rule Change Received From Members, Participants, or Others*

No written comments were either solicited or received.

**III. Date of Effectiveness of the Proposed Rule Change and Timing for Commission Action**

The foregoing proposed rule change has been designated as a fee change pursuant to Section 19(b)(3)(A)(ii) of the Act [11] and Rule 19b–4(f)(2) [12] thereunder, because it establishes or changes a due, fee, or other charge imposed by the Exchange. Accordingly, the proposal will take effect upon filing with the Commission. At any time within 60 days of the filing of such proposed rule change the Commission may summarily abrogate such rule change if it appears to the Commission that such action is necessary or appropriate in the public interest, for the protection of investors, or otherwise in furtherance of the purposes of the Act.

**IV. Solicitation of Comments**

Interested persons are invited to submit written data, views, and arguments concerning the foregoing, including whether the proposed rule change is consistent with the Act. Comments may be submitted by any of the following methods:

*Electronic Comments*

- Use the Commission's Internet comment form (*http://www.sec.gov/rules/sro.shtml*); or
- Send an e-mail to *rule-comments@sec.gov.* Please include File Number SR–CBOE–2005–107 on the subject line.

*Paper Comments*

- Send paper comments in triplicate to Jonathan G. Katz, Secretary, Securities and Exchange Commission, 100 F Street, NE., Washington, DC 20549–9303.

All submissions should refer to File Number SR–CBOE–2005–107. This file number should be included on the subject line if e-mail is used. To help the Commission process and review your comments more efficiently, please use only one method. The Commission will post all comments on the Commission's Internet Web site (*http://www.sec.gov/rules/sro.shtml*). Copies of the submission, all subsequent amendments, all written statements with respect to the proposed rule change that are filed with the Commission, and all written communications relating to the proposed rule change between the Commission and any person, other than those that may be withheld from the public in accordance with the provisions of 5 U.S.C. 552, will be available for inspection and copying in the Commission's Public Reference Room. Copies of such filing also will be available for inspection and copying at the principal office of the CBOE. All comments received will be posted without change; the Commission does not edit personal identifying information from submissions. You should submit only information that you wish to make available publicly. All submissions should refer to File Number SR–CBOE–2005–107 and should be submitted on or before January 19, 2006.

For the Commission, by the Division of Market Regulation, pursuant to delegated authority.[13]

**Jonathan G. Katz,**

*Secretary.*

[FR Doc. E5–8047 Filed 12–28–05; 8:45 am]

BILLING CODE 8010–01–P

[11] 15 U.S.C. 78s(b)(3)(A)(ii).

[12] 17 CFR 240.19b–4(f)(2).

[13] 17 CFR 200.30–3(a)(12).

---

## SECURITIES AND EXCHANGE COMMISSION

**[Release No. 34–53008; File No. SR–CBOE–2005–95]**

## Self-Regulatory Organizations; Chicago Board Options Exchange, Incorporated; Notice of Filing and Immediate Effectiveness of Proposed Rule Change Relating to Complex Orders on the Hybrid System

December 22, 2005.

Pursuant to Section 19(b)(1) of the Securities Exchange Act of 1934 (''Act'') [1] and Rule 19b–4 thereunder,[2] notice is hereby given that on December 19, 2005, the Chicago Board Options Exchange, Incorporated (''CBOE'' or ''Exchange'') filed with the Securities and Exchange Commission (''Commission'') the proposed rule change as described in Items I and II below, which Items have been prepared by the Exchange. The CBOE has filed this proposal pursuant to Section 19(b)(3)(A)(iii) of the Act [3] and Rule 19b–4(f)(6) thereunder,[4] which renders the proposal effective upon filing with the Commission.[5] The Commission is publishing this notice to solicit comments on the proposed rule change from interested persons.

**I. Self-Regulatory Organization's Statement of the Terms of Substance of the Proposed Rule Change**

The CBOE proposes to amend CBOE Rule 6.53C, ''Complex Orders on the Hybrid System,'' to better describe the routing of complex orders and to include orders from Market-Makers and specialists on an options exchange as additional order categories eligible to be routed to the Hybrid System complex order book (''COB'') from PAR workstations or directly to the COB. The text of the proposed rule change is available on the Exchange's Web site (*http://www.cboe.com*), at the Exchange's Office of the Secretary, and at the Commission's Public Reference Room.

**II. Self-Regulatory Organization's Statement of the Purpose of, and Statutory Basis for, the Proposed Rule Change**

In its filing with the Commission, the Exchange included statements concerning the purpose of, and basis for, the proposed rule change and discussed any comments it received on the proposed rule change. The text of these statements may be examined at the places specified in Item IV below. The Exchange has prepared summaries, set forth in Sections A, B, and C below, of the most significant aspects of such statements.

*A. Self-Regulatory Organization's Statement of the Purpose of, and Statutory Basis for, the Proposed Rule Change*

1. Purpose

The Commission recently approved CBOE Rule 6.53C, which sets forth the procedures used to trade complex orders on the CBOE's COB system.[6] Currently, CBOE Rule 6.53C provides that the appropriate Exchange committee may determine whether to allow complex orders to route to PAR or to the COB and whether to allow

[1] 15 U.S.C. 78s(b)(1).

[2] 17 CFR 240.19b–4.

[3] 15 U.S.C. 78s(b)(3)(A)(iii).

[4] 17 CFR 240.19b–4(f)(6).

[5] The CBOE has requested that the Commission waive the 30-day operative delay, as specified in Rule 19b–4(f)(6)(iii). 17 CFR 240.19b–4(f)(6)(iii).

[6] *See* Securities Exchange Act Release No. 51271 (February 28, 2005), 70 FR 10712 (March 4, 2005) (order approving File No. SR–CBOE–2004–45).

complex orders from non-broker-dealer public customers and from broker-dealers that are not Market-Makers or specialists on an options exchange to route from PAR workstations to the COB.

The CBOE proposes to amend CBOE Rule 6.53C to better describe the routing of complex orders. The CBOE intended at all times and built its COB in such a way that, depending on committee determination, complex orders could be routed directly to the COB (which facilitates more automated handling of complex orders), to the PAR workstation (where complex orders are announced to the trading crowd and are traded in open outcry), and/or from the PAR workstation to the COB.[7] Accordingly, the revised rule more clearly states the routing alternatives for complex orders.

The CBOE also proposes to include orders from Market-Makers and specialists on an options exchange as additional order categories that are eligible to be entered in the COB. As part of the original CBOE Rule 6.53C proposal and text, the CBOE never intended to route these types of orders to the COB (either directly to the COB or from PAR to the COB). Instead, the CBOE intended that such orders would be routed to PAR workstations for handling. However, the CBOE is now proposing to make these orders eligible for entry into the COB, subject to committee determination. The CBOE also proposes to make corresponding changes to the rule text to clarify that, in addition to routing to PAR workstations, as determined by the appropriate Exchange committee, such orders would be eligible for routing from PAR workstations to the COB and/or routing to the COB directly.

2. Statutory Basis

The CBOE believes the proposed rule change is consistent with the Act[8] and the rules and regulations under the Act applicable to a national securities exchange and, in particular, the requirements of Section 6(b) of the Act.[9] Specifically, the Exchange believes the proposed rule change is consistent with Section 6(b)(5)[10] in that it is designed to facilitate transactions in securities, to promote just and equitable principles of trade, to enhance competition and to protect investors and the public interest.

*B. Self-Regulatory Organization's Statement on Burden on Competition*

The CBOE does not believe that the proposed rule change will impose any burden on competition not necessary or appropriate in furtherance of the purposes of the Act.

*C. Self-Regulatory Organization's Statement on Comments on the Proposed Rule Change Received From Members, Participants, or Others*

The Exchange neither solicited nor received comments on the proposal.

**III. Date of Effectiveness of the Proposed Rule Change and Timing for Commission Action**

The Exchange has designated the proposed rule change as one that: (i) Does not significantly affect the protection of investors or the public interest; (ii) does not impose any significant burden on competition; and (iii) does not become operative for 30 days from the date of filing, or such shorter time as the Commission may designate if consistent with the protection of investors and the public interest. In addition, as required under rule 19b–4(f)(6)(iii),[11] the CBOE provided the Commission with written notice of its intention to file the proposed rule change, along with a brief description and the text of the proposed rule change, at least five business days prior to filing the proposal with the Commission. Therefore, the foregoing rule change has become effective pursuant to Section 19(b)(3)(A) of the Act[12] and Rule 19b–4(f)(6) thereunder.[13]

Pursuant to rule 19b–4(f)(6)(iii) under the Act, a proposal does not become operative for 30 days after the date of its filing, or such shorter time as the Commission may designate if consistent with the protection of investors and the public interest. The CBOE has requested that the Commission waive the 30-day operative delay. The CBOE believes that waiver of the 30-day operative delay is consistent with the protection of investors and the public interest because the proposal clarifies the CBOE's existing rule and amends the rule to allow orders from Market Makers and options exchange specialists to be eligible for entry into the COB, which could facilitate more automated handling of complex orders and allow CBOE participants to access potentially larger pools of liquidity located on the CBOE.

The Commission believes that waiving the 30-day operative delay is consistent with the protection of investors and the public interest because the proposal clarifies the CBOE's existing rule and because allowing orders from Market Makers and options exchange specialists to be eligible for entry into the COB could facilitate the execution of complex orders entered into the COB.[14] For these reasons, the Commission designates that the proposed rule change become operative immediately.

At any time within 60 days of the filing of the proposed rule change, the Commission may summarily abrogate the rule change if it appears to the Commission that such action is necessary or appropriate in the public interest, for the protection of investors, or otherwise in furtherance of the purposes of the Act.

**IV. Solicitation of Comments**

Interested persons are invited to submit written data, views and arguments concerning the foregoing, including whether the proposed rule change is consistent with the Act. Comments may be submitted by any of the following methods:

*Electronic Comments*

- Use the Commission's Internet comment form (*http://www.sec.gov/rules/sro.shtml*); or
- Send an e-mail to *rule-comments@sec.gov.* Please include File Number SR–CBOE–2005–95 on the subject line.

*Paper Comments*

- Send paper comments in triplicate to Jonathan G. Katz, Secretary, Securities and Exchange Commission, 100 F Street, NE., Washington, DC 20549–9303.

All submissions should refer to File No. SR–CBOE–2005–95. This file number should be included on the subject line if e-mail is used. To help the Commission process and review your comments more efficiently, please use only one method. The Commission will post all comments on the Commission's Internet Web site (*http://www.sec.gov/rules/sro.shtml*). Copies of the

[7] The appropriate committee may determine that more than one of these routing alternatives is available. Thus, for example, if the appropriate committee determines that the routing alternatives available for public customer complex orders in a particular class are to: (i) Route directly to the COB, (ii) route to PAR, and (iii) route from PAR to the COB, a member representing a public customer complex order could elect whether to route that order directly to the COB or to a PAR workstation and, if routed to a PAR workstation, whether the order would be represented in open outcry or routed from the PAR workstation to the COB for electronic handling.

[8] 15 U.S.C. 78a *et seq.*

[9] 15 U.S.C. 78f(b).

[10] 15 U.S.C. 78f(b)(5).

[11] 17 CFR 240.19b–4(f)(6)(iii).

[12] 15 U.S.C. 78s(b)(3)(A).

[13] 17 CFR 240.19b–4(f)(6).

[14] For purposes of waiving the 30-day operative delay, the Commission has considered the proposed rule's impact on efficiency, competition, and capital formation. 15 U.S.C. 78c(f).

submission, all subsequent amendments, all written statements with respect to the proposed rule change that are filed with the Commission, and all written communications relating to the proposed rule change between the Commission and any person, other than those that may be withheld from the public in accordance with the provisions of 5 U.S.C. 552, will be available for inspection and copying in the Commission's Public Reference Room. Copies of the filing also will be available for inspection and copying at the principal office of the Exchange. All comments received will be posted without change; the Commission does not edit personal identifying information from submissions. You should submit only information that you wish to make available publicly. All submissions should refer to File No. SR–CBOE–2005–95 and should be submitted on or before January 19, 2006.

For the Commission, by the Division of Market Regulation, pursuant to delegated authority.[15]

**Jonathan G. Katz,**

*Secretary.*

[FR Doc. E5–8052 Filed 12–28–05; 8:45 am]

**BILLING CODE 8010–01–P**

---

## SECURITIES AND EXCHANGE COMMISSION

**[Release No. 34–52987; File No. SR–CBOE–2005–108]**

## Self-Regulatory Organizations; Chicago Board Options Exchange, Incorporated; Notice of Filing and Immediate Effectiveness of a Proposed Rule Change Relating to a Session Fee Increase for the Regulatory Element of the Continuing Education Requirements of CBOE Rule 9.3A

December 20, 2005.

Pursuant to section 19(b)(1) of the Securities Exchange Act of 1934 (''Act''),[1] and Rule 19b–4 thereunder,[2] notice is hereby given that on December 12, 2005, the Chicago Board Options Exchange, Incorporated (''CBOE'' or ''Exchange'') filed with the Securities and Exchange Commission (''Commission'') the proposed rule change as described in Items I, II, and III below, which Items have been prepared by CBOE. The Exchange has designated this proposal as one establishing or changing a due, fee, or other charge imposed by CBOE under section 19(b)(3)(A)(ii) of the Act,[3] and Rule 19b–4(f)(2) thereunder,[4] which renders the proposal effective upon filing with the Commission. The Commission is publishing this notice to solicit comments on the proposed rule change from interested persons.

### I. Self-Regulatory Organization's Statement of the Terms of Substance of the Proposed Rule Change

CBOE proposes to amend its Fees Schedule to increase the session fee for the Regulatory Element of the Continuing Education requirements of CBOE Rule 9.3A. Below is the text of the proposed rule change. Proposed new language is in *italics;* proposed deletions are in [brackets].

* * * * *

Chicago Board Options Exchange, Inc.—Fees Schedule

December [1]*12*, 2005

1.–4. Unchanged.
FOOTNOTES: (1)–(18) Unchanged.
5.–11. Unchanged.
12. REGULATORY FEES
(A)–(E) Unchanged.
*(F) Continuing Education Fee:*
*There shall be a session fee of $75.00 assessed as to each individual who is required to complete the Regulatory Element of the Continuing Education Requirements pursuant to CBOE Rule 9.3A.*
13.–23. Unchanged.
Remainder of Fees Schedule—Unchanged.

* * * * *

### II. Self-Regulatory Organization's Statement of the Purpose of, and Statutory Basis for, the Proposed Rule Change

In its filing with the Commission, CBOE included statements concerning the purpose of and basis for the proposed rule change and discussed any comments it received on the proposed rule change. The text of these statements may be examined at the places specified in Item IV below. CBOE has prepared summaries, set forth in sections A, B, and C below, of the most significant aspects of such statements.

*A. Self-Regulatory Organization's Statement of the Purpose of, and Statutory Basis for, the Proposed Rule Change*

1. Purpose

The Regulatory Element, a computer-based education program administered by The National Association of Securities Dealers, Inc. (''NASD'') to help ensure that registered persons are kept up-to-date on regulatory, compliance, and sales practice matters in the industry, is a component of the Securities Industry Continuing Education Program (''Program'') under CBOE Rule 9.3A. The Securities Industry/Regulatory Council on Continuing Education (''Council'')[5] was organized in 1995 to facilitate cooperative industry/regulatory coordination of the administration and future development of the Program in keeping with applicable industry regulations and changing industry needs. Its roles include recommending and helping develop specific content and questions for the Regulatory Element, defining minimum core curricula for the Firm Element component of the Program, and developing and updating information about the Program for industry-wide dissemination.

It is the Council's responsibility to maintain the Program on a revenue neutral basis while maintaining adequate reserves for unanticipated future expenditures.[6] In December 2003, the Council voted to reduce the Regulatory Element session fee from $65 to $60 effective January 1, 2004, in order to reduce the reserves to a level necessary to support current and expected programs and expenses. The Council decided to review the reserve level and evaluate the Regulatory Element session fee on an annual basis. The 2004 financial review and evaluation produced no change in the Regulatory Element session fee. In September 2005, the Council's annual financial review and evaluation revealed that unless the Regulatory Element session fee were adjusted, the Council's reserves were likely to be insufficient in 2006. The reasons for the declining surplus are: (1) Lower than projected session volume resulting in a significant decrease in actual revenue over projected revenue; (2) higher delivery-related expenses beginning in 2006; and (3) costs associated with the

---

[15] 17 CFR 200.30–3(a)(12).

[1] 15 U.S.C. 78s(b)(1).

[2] 17 CFR 240.19b–4.

[3] 15 U.S.C. 78s(b)(3)(A)(ii).

[4] 17 CFR 240.19b–4(f)(2).

[5] The Council currently consists of 20 individuals, 14 of whom are securities industry professionals associated with NASD member firms and six of whom represent self-regulatory organizations (the American Stock Exchange LLC, CBOE, the Municipal Securities Rulemaking Board, NASD, the New York Stock Exchange, Inc., and the Philadelphia Stock Exchange, Inc.).

[6] The Regulatory Element session fee was initially set at $75 when NASD established the continuing education requirements in 1995. The session fee was reduced in 1999 to $65 and again in 2004 to $60. The proposed fee increase returns the Regulatory Element session fee to its 1995 level.

rebuilding of PROCTOR®.[7] At its September 2005 meeting, the Council voted unanimously to increase the Regulatory Element session fee from $60 to $75, effective January 1, 2006, in order to meet costs and maintain an adequate reserve in 2006.

The proposed implementation date is January 1, 2006.

2. Statutory Basis

The CBOE believes the proposed rule change is consistent with section 6(b) of the Act,[8] in general, and furthers the objectives of sections 6(b)(4)[9] and 6(b)(5)[10] of the Act in particular, in that it is designed to provide for the equitable allocation of reasonable dues, fees, and other charges among CBOE members and other persons using its facilities, and that CBOE rules must be designed to prevent fraudulent and manipulative acts and practices, to promote just and equitable principles of trade, and, in general, to protect investors and the public interest. CBOE believes that the proposed rule change is designed to accomplish these ends by enabling the Program to be maintained on a revenue neutral basis while maintaining adequate reserves for unanticipated future expenditures.

*B. Self-Regulatory Organization's Statement on Burden on Competition*

CBOE does not believe that the proposed rule change will impose any burden on competition that is not necessary or appropriate in furtherance of the purposes of the Act.

*C. Self-Regulatory Organization's Statement on Comments on the Proposed Rule Change Received From Members, Participants or Others*

CBOE has neither solicited nor received comments on the proposed rule change.

## III. Date of Effectiveness of the Proposed Rule Change and Timing for Commission Action

The foregoing rule change has become effective pursuant to section 19(b)(3)(A)(ii) of the Act[11] and Rule 19b–4(f)(2) thereunder,[12] because it establishes or changes a due, fee, or other charge imposed by the CBOE. Accordingly, the proposal will take effect upon filing with the Commission. At any time within 60 days of the filing of the proposed rule change, the Commission may summarily abrogate such rule change if it appears to the Commission that such action is necessary or appropriate in the public interest, for the protection of investors, or otherwise in furtherance of the purposes of the Act.

## IV. Solicitation of Comments

Interested persons are invited to submit written data, views, and arguments concerning the foregoing, including whether the proposed rule change is consistent with the Act. Comments may be submitted by any of the following methods:

*Electronic Comments*

- Use the Commission's Internet comment form (*http://www.sec.gov/rules/sro.shtml*); or
- Send an e-mail to *rule-comments@sec.gov.* Please include File Number SR–CBOE–2005–108 on the subject line.

*Paper Comments*

- Send paper comments in triplicate to Jonathan G. Katz, Secretary, Securities and Exchange Commission, 100 F Street, NE., Washington, DC 20549–9303.

All submissions should refer to File Number SR–CBOE–2005–108. This file number should be included on the subject line if e-mail is used. To help the Commission process and review your comments more efficiently, please use only one method. The Commission will post all comments on the Commission's Internet Web site (*http://www.sec.gov/rules/sro.shtml*). Copies of the submission, all subsequent amendments, all written statements with respect to the proposed rule change that are filed with the Commission, and all written communications relating to the proposed rule change between the Commission and any person, other than those that may be withheld from the public in accordance with the provisions of 5 U.S.C. 552, will be available for inspection and copying in the Commission's Public Reference Room. Copies of the filing also will be available for inspection and copying at the principal offices of CBOE. All comments received will be posted without change; the Commission does not edit personal identifying information from submissions. You should submit only information that you wish to make available publicly. All submissions should refer to File Number SR–CBOE–2005–108 and should be submitted on or before January 19, 2006.

For the Commission, by the Division of Market Regulation, pursuant to delegated authority.[13]

**Jonathan G. Katz,**

*Secretary.*

[FR Doc. E5–8063 Filed 12–28–05; 8:45 am]

**BILLING CODE 8010–01–P**

[7] PROCTOR® is a technology system that supports computer-based testing and training. The Regulatory Element program uses PROCTOR® to package content, deliver, score and report results, and maintain and generate statistical data related to the Program.

[8] 15 U.S.C. 78f(b).

[9] 15 U.S.C. 78f(b)(4).

[10] 15 U.S.C. 78f(b)(5).

[11] 15 U.S.C. 78s(b)(3)(A)(ii).

[12] 17 CFR 240.19b–4(f)(2).

[13] 17 CFR 200.30–3(a)(12).

---

## SECURITIES AND EXCHANGE COMMISSION

**[Release No. 34–53007; File No. SR–ISE–2005–48]**

## Self-Regulatory Organizations; International Securities Exchange, Inc.; Order Granting Approval of a Proposed Rule Change and Amendments Nos. 1 and 2 Thereto Relating to Market Maker Quote Interaction

December 22, 2005.

## I. Introduction

On October 3, 2005, the International Securities Exchange, Inc. (''ISE'' or ''Exchange'') filed with the Securities and Exchange Commission (''Commission''), pursuant to Section 19(b)(1) of the Securities Exchange Act of 1934 (''Act'')[1] and Rule 19b–4 thereunder,[2] a proposed rule change to amend ISE Rule 804(d) regarding a delay of up to one second before two market maker quotations interact. On October 21, 2005, the ISE submitted Amendment No. 1 to the proposed rule change.[3] On November 3, 2005, the ISE submitted Amendment No. 2 to the proposed rule change.[4] The proposed rule change and Amendments No. 1 and 2 were published for comment in the **Federal Register** on November 10, 2005.[5] The Commission received no comments on the proposal. This order approves the proposed rule change, as amended.

## II. Description

Currently, ISE Rule 804(d) provides for a one-second delay before the quotations of ISE market makers

[1] 15 U.S.C. 78s(b)(1).

[2] 17 CFR 240.19b–4.

[3] *See* Form 19b–4 dated October 21, 2005, which replaced the original filing in its entirety (''Amendment No. 1'').

[4] *See* partial amendment dated November 3, 2005, which corrected a minor omission in the current rule text and a typographical error in the filing (''Amendment No. 2'').

[5] Securities Exchange Act Release No. 52729 (November 3, 2005), 70 FR 68485 (''Notice'').

interact.[6] As noted in SR–ISE–2004–24, the ISE treats orders and quotations differently, with ISE Rule 804(a) stating that only market makers may enter quotations on the ISE. Market makers use quotations to input and update prices on multiple series of options at the same time. Quotations generally are based on pricing models that rely on various factors, including the price and volatility of the underlying security. The ISE stated that as these variables change, a market maker's pricing model automatically updates quotations for some or all of an option's series. In contrast, an order is an interest to buy a stated number of contracts of one specific options series. The ISE noted that all ISE members, including ISE market makers, can enter orders.[7]

According to the ISE, the purpose of the one-second delay was to allow a market maker to update its quotations to reflect price changes in an underlying stock before another market maker's quotation could ''hit'' the updating market maker's quotation. In SR–ISE–2004–24, the ISE represented that it promptly processes quotation updates when it receives them, but that there is invariably a lag between the time the underlying stock price first changes and the time by which the ISE can process all the corresponding quotation changes. In SR–ISE–2004–24, the ISE also stated its belief that the one-second delay would allow the ISE the time to process quotation updates, without effecting multiple executions during the update process. In the Notice, the ISE noted, however, that the one-second delay may no longer be necessary as the ISE trading system and its market maker members' quoting systems continue to advance technologically. Accordingly, the ISE proposes an amendment to ISE Rule 804(d) to give the ISE the flexibility to remove the one-second delay. In making a determination to remove the one-second delay, the ISE stated that it would take into consideration input from its market maker members, particularly through the ISE's Market Maker Advisory Committee. The ISE also noted that any change made to the one-second delay would be implemented on a uniform, market-wide basis (as opposed to, for example, a class-by-class basis). Further, the ISE stated that it would inform its members of any changes made to the one-second delay by distributing a Regulatory Information Circular prior to the implementation of any such change.

## III. Discussion

The Commission finds that the proposed rule change is consistent with the requirements of the Act and the rules and regulations thereunder applicable to a national securities exchange[8] and, in particular, the requirements of Section 6(b) of the Act[9] and the rules and regulations thereunder. Specifically, the Commission finds that the proposal is consistent with Section 6(b)(5) of the Act,[10] in that it is designed to promote just and equitable principles of trade, remove impediments to and perfect the mechanisms of a free and open market and a national market system, and, in general, to protect investors and the public interest.

In SR–ISE–2004–24, the Commission noted the ISE's belief that, without the proposed one-second ''timer'' function, pricing inefficiencies would result on the Exchange, and ISE market makers would widen their quotations or limit size to avoid multiple executions against other market makers.[11] To the extent the ISE trading system and its market maker members' quoting systems continue to advance technologically to reduce the likelihood of market maker quotes interacting, the one-second delay may no longer be necessary. Accordingly, the Commission believes that granting the ISE the flexibility to remove the one-second delay in such circumstance is consistent with the Act. Additionally, the Commission believes that permitting the ISE to determine to reinstate the one-second delay also is consistent with the Act, if the reinstatement of the delay is necessary to avoid the interaction of market maker quotations. In determining whether to remove the one-second delay, the Commission understands that the ISE would consult with its market maker members, particularly through the Exchange's Market Maker Advisory Committee. Regardless of whether the ISE makes any changes to the one-second delay, the Commission notes that ISE market makers would be required to be firm for their quotations for the same size to customers and broker-dealer orders, including orders for the account of other ISE market makers.

## IV. Conclusion

*It is therefore ordered,* pursuant to Section 19(b)(2) of the Act,[12] that the proposed rule change (SR–ISE–2005–48), as amended, is approved.

For the Commission, by the Division of Market Regulation, pursuant to delegated authority.[13]

**Jonathan G. Katz,**

*Secretary.*

[FR Doc. E5–8071 Filed 12–28–05; 8:45 am]

BILLING CODE 8010–01–P

[6] *See* Securities Exchange Act Release No. 49931 (June 28, 2004), 69 FR 40696 (July 6, 2004) (''SR–ISE–2004–24'').

[7] ISE Rule 717 imposes various limitations on orders that Electronic Access Members may enter on the ISE, while ISE Rule 805 governs market maker orders.

[8] In approving this proposal, the Commission has considered the proposed rule's impact on efficiency, competition, and capital formation. 15 U.S.C. 78c(f).

[9] 15 U.S.C. 78f(b).

[10] 15 U.S.C. 78f(b)(5).

[11] In connection with the approval of SR–ISE–2004–24, the Commission granted ISE's request for a limited exemption from Rule 602 of Regulation NMS under the Act (''Quote Rule''). Specifically, the Commission granted ISE market makers an exemption from their obligations under paragraph (c)(2) of the Quote Rule with respect to trades with matching ISE market maker quotations for no more than one second, provided that the quotations are locked or crossed for no more than one second, and that such ISE market maker is firm to all other customer and broker-dealer orders, including orders for the accounts of other ISE market makers. *See* letter from Robert Colby, Deputy Director, Division of Market Regulation, Commission, to Michael Simon, Senior Vice President and General Counsel, ISE, dated June 24, 2004.

[12] 15 U.S.C. 78f(b)(2).

[13] 17 CFR 200.30–3(a)(12).

# SECURITIES AND EXCHANGE COMMISSION

**[Release No. 34–53005; File No. SR–NASD–2005–147]**

## Self-Regulatory Organizations; National Association of Securities Dealers, Inc.; Notice of Filing and Immediate Effectiveness of Proposed Rule Change Relating to Fees for NASD Members Using Nasdaq's INET Facility

December 22, 2005.

Pursuant to Section 19(b)(1) of the Securities Exchange Act of 1934 (''Act'')[1] and Rule 19b–4 thereunder,[2] notice is hereby given that on December 9, 2005, the National Association of Securities Dealers, Inc. (''NASD''), through its subsidiary, The Nasdaq Stock Market, Inc. (''Nasdaq''), filed with the Securities and Exchange Commission (''Commission'') the proposed rule change as described in Items I, II, and III below, which Items have been prepared by Nasdaq. Nasdaq has designated this proposal as one establishing or changing a due, fee, or other charge imposed by the self-regulatory organization under Section 19(b)(3)(A)(ii)[3] of the Act and Rule 19b–4(f)(2) thereunder,[4] which renders the proposal effective upon filing with the Commission. The Commission is

[1] 15 U.S.C. 78s(b)(1).

[2] 17 CFR 240.19b–4.

[3] 15 U.S.C. 78s(b)(3)(A)(ii).

[4] 17 CFR 240.19b–4(f)(2).

publishing this notice to solicit comments on the proposed rule change from interested persons.

## I. Self-Regulatory Organization's Statement of the Terms of the Substance of the Proposed Rule Change

Nasdaq proposes to make additions and corrections to the fees governing Nasdaq's INET Facility for NASD members. Nasdaq states that it will implement the proposed rule change immediately.

The text of the proposed rule change is below. Proposed new language is in *italics;* proposed deletions are in [brackets].

* * * * *

7010. System Services

(a)–(v) No Change.

(w) INET System Order Execution

(1) For a period of time not to exceed 60 days after INET becomes a facility of Nasdaq, the following charges shall apply to the use of the order execution services of Nasdaq's INET System by Participants for:

| | |
|---|---|
| **NASDAQ-Listed Securities** | |
| Order Execution: | |
| Non-Directed Order that accesses the Quote/Order of a market Participant through Nasdaq's INET System: | |
| Charge to Participant entering order: | |
| Average daily shares of liquidity provided through Nasdaq's INET System by the Participant during the month: | |
| Greater than 60 million shares accessed or routed and 5 million shares provided. | $0.0027 per share executed. |
| Greater than 40 million shares but less than 60 million shares accessed or routed and 5 million shares provided. | $0.0028 per share executed. |
| Less than 5 million shares provided or less than 40 million shares accessed or routed. | $0.0030 per share executed. |
| Credit to Participant providing liquidity: | |
| Average daily shares of liquidity provided through Nasdaq's INET System by the Participant during the month: | |
| Greater than 30 million shares provided or greater than 30 million shares accessed or routed or greater than 50 million shares combined provided, accessed or routed. | $0.0025 per share executed. |
| Less than or equal to 30 million shares provided and less than or equal to 30 million shares accessed or routed and less than or equal to 50 million shares combined provided, accessed, or routed. | $0.002 per share executed. |
| Any order that matches against another order of the same Participant. | $0.00025 per share per side. |
| Routed Orders: | |
| Any other order entered by a Participant that is routed outside of Nasdaq's INET System. | $0.0025 per share executed. |
| *Any other order entered by a Participant that is routed to the NASDAQ Opening or Closing Cross.* | *$0.001 per share executed.* |
| **AMEX-Listed Stocks** | |
| Order Execution: | |
| Non-Directed Order that accesses the Quote/Order of a market Participant through Nasdaq's INET System: | |
| Credit to Participant entering order: ..... | *$0.0009* [$0.001] per share executed. |
| Charge to Participant providing liquidity: | *$0.001* [$0.0009] *per share executed.* |
| Any order that matches against another order of the same Participant. | No charge. |
| Routed Orders: | |
| Any order entered by a Participant that is routed outside of Nasdaq's INET System through DOT. | $0.01 per share executed. |
| Any order entered by a Participant that is routed outside of Nasdaq's INET System other than through DOT. | $0.0035 per share executed. |
| **AMEX-Listed ETFs** | |
| Order Execution: | |
| Non-Directed Order that accesses the Quote/Order of a market Participant through Nasdaq's INET System: | |
| Charge to Participant entering order: | |
| Average daily shares of liquidity provided through Nasdaq's INET System by the Participant during the month: | |
| Greater than 60 million shares accessed or routed and 5 million shares provided. | $0.0027 per share executed. |
| Greater than 40 million shares but less than 60 million shares accessed or routed and 5 million shares provided. | $0.0028 per share executed. |
| Less than 5 million shares provided or less than 40 million shares accessed or routed. | $0.0030 per share executed. |
| Credit to Participant providing liquidity: | |

| | |
|---|---|
| Average daily shares of liquidity provided through Nasdaq's INET System by the Participant during the month: | |
| Greater than 30 million shares provided or greater than 30 million shares accessed or routed or greater than 50 million shares combined provided, accessed or routed. | $0.0025 per share executed. |
| Less than or equal to 30 million shares provided and less than or equal to 30 million shares accessed or routed and less than or equal to 50 million shares combined provided, accessed, or routed. | $0.002 per share executed. |
| Any order that matches against another order of the same Participant. | $0.00025 per share per side. |
| Routed Orders: | |
| Any order entered by a Participant that is routed outside of Nasdaq's INET System [through DOT] *to the AMEX.* | $0.01 per share executed. |
| Any order entered by a Participant that is routed outside of Nasdaq's INET System [other than through DOT] *other than to the AMEX.* | $0.0035 per share executed. |
| **NYSE-Listed stocks** | |
| Order Execution: | |
| Non-Directed Order that accesses the Quote/Order of a market Participant through Nasdaq's INET System: | |
| Credit to Participant entering order: | *$0.0009* [$0.001] per share executed. |
| Charge to Participant providing liquidity: | [$0.0009].*$0.001 per share executed.* |
| Any order that matches against another order of the same Participant. | No charge. |
| Routed Orders: | |
| [Any order entered by a Participant that is routed outside of Nasdaq's INET System through DOT]*Any order entered by a Participant that is routed outside of Nasdaq's INET System through DOT that is charged a fee by the specialist (billable).* | [$0.0005]*$0.01* per share executed |
| *Charge to any order entered by a Participant that is routed outside of Nasdaq's INET System through DOT that is not charged a fee by the specialist (non-billable):* | |
| *Average daily shares of billable and non-billable NYSE DOT shares:* | |
| *Greater than 30 million shares* | *$0.0001.* |
| *Greater than 2 million shares but less than or equal to 30 million shares.* | *$0.0003.* |
| *Greater than 250,000 shares but less than or equal to 2 million shares.* | *$0.0005.* |
| *Greater than 100,000 shares but less than or equal to 250,000 shares.* | *$0.001.* |
| *Less than or equal to 100,000 shares* | *$0.01.* |
| Any order entered by a Participant that is routed outside of Nasdaq's INET System other than through DOT. | $0.0015 per share executed. |

*Upon Participant's request, added liquidity among Participants that are wholly owned by a common parent may be aggregated.*

*Market Data Revenue Sharing for AMEX Listed (Tape B) Securities*

*Subscribers that add liquidity to the INET limit order book in Tape B securities (e.g. AMEX listed securities) will receive 50% of the market data revenue paid by the Consolidated Tape Association. INET will distribute the market data revenue based on the number of tape reportable transactions executed by the Participant, as paid to INET.*

*Port Fees:*

*Connectivity to Harborside Financial Center and Secaucus Datacenters*

- *$400 per month for each OUCH®/FIX pair*
- *$400 per month for each ITCH® data feed pair*
- *$400 per month for each DROP® pair*
- *$400 per month for each Compressed ITCH® data feed pair*
- *$1000 per month for each Multicast ITCH® data feed pair*
- *Internet Ports: An additional $200 per month for each Internet port that requires additional bandwidth.*

*Connectivity to Chicago Datacenter*

- *$800 per month for each OUCH®/FIX pair*
- *$800 per month for each ITCH® data feed pair*
- *$800 per month for each DROP® pair*

*All port fees, not including Internet Bandwidth surcharges, will be waived for Subscribers that for a calendar month have an average daily share volume for executed orders exceeding 30 million shares of added liquidity.*

*INET Terminal Fees:*

- *Each ID is subject to a minimum commission fee of $50 per month unless it executes a minimum of 100,000 shares.*
- *Each ID receiving market data is subject to pass-through fees for use of these services. Pricing for these services is determined by the exchanges and/or market center.*
- *Each ID that is given web access is subject to a $50 monthly fee.*

*Portal Fees:*

- *Each ID is subject to a monthly user fee of $150*
- *Each ID receiving market data is subject to pass-through fees for use of these services. Pricing for these services*

*is determined by the exchanges and/or market center.*

* * * * *

## II. Self-Regulatory Organization's Statement of the Purpose of, and Statutory Basis for, the Proposed Rule Change

In its filing with the Commission, Nasdaq included statements concerning the purpose of and basis for the proposed rule change and discussed any comments it received on the proposed rule change. The text of these statements may be examined at the places specified in Item IV below. Nasdaq has prepared summaries, set forth in sections A, B, and C below, of the most significant aspects of such statements.

*A. Self-Regulatory Organization's Statement of the Purpose of, and Statutory Basis for, the Proposed Rule Change*

1. Purpose

On December 7, 2005, the Commission approved rules and fees governing Nasdaq's INET Facility.[5] This filing corrects, codifies, and establishes fee and rebate practices for INET subscribers that are NASD members. In summary, Nasdaq states that the filing: (1) Corrects the credit and fee schedule for American Stock Exchange (''Amex'') and New York Stock Exchange (''NYSE'') order executions that were incorrectly inverted in the original fee schedule; (2) codifies current INET fees for orders executed as part of the Nasdaq Opening or Closing Cross Process; (3) codifies current INET fee practices of revenue sharing for Tape B securities; (4) codifies the current INET fee structure governing connectivity and terminal charges for its facilities; and (5) establishes a new uniform, tiered fee-structure for orders routed to the NYSE through DOT.

2. Statutory Basis

Nasdaq believes that the proposed rule change is consistent with the provisions of Section 15A of the Act,[6] in general, and with Section 15A(b)(5) of the Act,[7] in particular, in that the proposed rule change provides for the equitable allocation of reasonable dues, fees, and other charges among members and issuers and other persons using any facility or system which the NASD operates or controls.

*B. Self-Regulatory Organization's Statement on Burden on Competition*

Nasdaq does not believe that the proposed rule change will result in any burden on competition that is not necessary or appropriate in furtherance of the purposes of the Act.

*C. Self-Regulatory Organization's Statement on Comments on the Proposed Rule Change Received From Members, Participants, or Others*

Nasdaq states that written comments were neither solicited nor received.

## III. Date of Effectiveness of the Proposed Rule Change and Timing for Commission Action

The foregoing rule change is subject to Section 19(b)(3)(A)(ii) of the Act[8] and subparagraph (f)(2) of Rule 19b–4[9] thereunder because it establishes or changes a due, fee, or other charge imposed by the self-regulatory organization. Accordingly, the proposal is effective upon Commission receipt of the filing. At any time within 60 days of the filing of such proposed rule change, the Commission may summarily abrogate such rule change if it appears to the Commission that such action is necessary or appropriate in the public interest, for the protection of investors, or otherwise in furtherance of the purposes of the Act.[10]

## IV. Solicitation of Comments

Interested persons are invited to submit written data, views, and arguments concerning the foregoing, including whether the proposed rule change is consistent with the Act. Comments may be submitted by any of the following methods:

*Electronic Comments*

- Use the Commission's Internet comment form (*http://www.sec.gov/rules/sro.shtml*); or
- Send an e-mail to *rule-comments@sec.gov.* Please include File Number SR–NASD–2005–147 on the subject line.

*Paper Comments*

- Send paper comments in triplicate to Jonathan G. Katz, Secretary, Securities and Exchange Commission, 100 F Street, NE., Washington, DC 20549–9303.

All submissions should refer to File Number SR–NASD–2005–147. This file number should be included on the subject line if e-mail is used. To help the Commission process and review your comments more efficiently, please use only one method. The Commission will post all comments on the Commission's Internet Web site (*http://www.sec.gov/rules/sro.shtml*). Copies of the submission, all subsequent amendments, all written statements with respect to the proposed rule change that are filed with the Commission, and all written communications relating to the proposed rule change between the Commission and any person, other than those that may be withheld from the public in accordance with the provisions of 5 U.S.C. 552, will be available for inspection and copying in the Commission's Public Reference Room. Copies of such filing also will be available for inspection and copying at the principal office of the NASD. All comments received will be posted without change; the Commission does not edit personal identifying information from submissions. You should submit only information that you wish to make available publicly. All submissions should refer to File Number SR–NASD–2005–147 and should be submitted on or before January 19, 2006.

For the Commission, by the Division of Market Regulation, pursuant to delegated authority.[11]

**Jonathan G. Katz,**

*Secretary.*

[FR Doc. E5–8042 Filed 12–28–05; 8:45 am]

**BILLING CODE 8010–01–P**

---

## SECURITIES AND EXCHANGE COMMISSION

**[Release No. 34–53013; File No. SR–BSE–2005–49]**

## Self-Regulatory Organizations; National Association of Securities Dealers, Inc.; Notice of Filing and Order Granting Accelerated Approval of a Proposed Rule Change and Amendment No. 1 Thereto Relating to the Market Opening Procedures of the Boston Options Exchange Facility

December 22, 2005.

Pursuant to Section 19(b)(1) of the Securities Exchange Act of 1934 (''Act''),[1] and Rule 19b–4 thereunder,[2] notice is hereby given that on November 4, 2005, the Boston Stock Exchange, Inc. (''BSE'' or ''Exchange'') filed with the Securities and Exchange Commission (''Commission'') the proposed rule change as described in Items I and II below, which Items have been prepared

[5] *See* Securities Exchange Act Release No. 52902 (December 7, 2005), 70 FR 73810 (December 13, 2005).

[6] 15 U.S.C. 78*o*–3.

[7] 15 U.S.C. 78*o*–3(b)(5).

[8] 15 U.S.C. 78s(b)(3)(A)(ii).

[9] 17 CFR 240.19b–4(f)(2).

[10] 15 U.S.C. 78s(b)(3)(C).

[11] 17 CFR 200.30–3(a)(12).

[1] 15 U.S.C. 78s(b)(l).

[2] 17 CFR 240.19b–4.

by BSE. The Exchange filed Amendment No. 1 to the proposed rule change on December 13, 2005.[3] The Commission is publishing this notice to solicit comments on the proposed rule change, as amended, from interested persons and is approving the proposal on an accelerated basis.

**I. Self-Regulatory Organization's Statement of the Terms of Substance of the Proposed Rule Change**

BSE is proposing to amend its rules governing its market opening procedures on the Boston Options Exchange (''BOX''). The Exchange is proposing specifically to revise Chapter V, Section 9, of the BOX Rules to (1) amend the timeframe in which the BOX Trading Host will start opening the market and the intervals in which option classes in a series may be opened to provide a quicker, more efficient, fair, and orderly market opening; and (2) to require BOX Market Makers to provide continuous, two-sided quotes at the opening of the market.

**II. Self-Regulatory Organization's Statement of the Purpose of, and Statutory Basis for, the Proposed Rule Change**

In its filing with the Commission, the Exchange included statements concerning the purpose of, and basis for, the proposed rule change, as amended, and discussed any comments it received on the proposal. The text of these statements may be examined at the places specified in Item III below. The Exchange has prepared summaries, set forth in Sections A, B, and C below, of the most significant aspects of such statements.

The text of the proposed rule change is available on the Exchange's Internet Web site (*http://www.bostonstock.com*), at the Exchange's principal office, and at the Commission's Public Reference Room.

*A. Self-Regulatory Organization's Statement of the Purpose of, and the Statutory Basis for, the Proposed Rule Change*

1. Purpose

The purpose of this proposed rule is to create a quicker, more efficient, fair, and orderly market opening, and to require BOX Market Makers to provide continuous, two-sided quotes at the opening of the market.

The BOX Trading Host currently opens classes starting at the first round minute of trading of the underlying security in the primary market, and at each round minute thereafter. Due to enhancements to BOX technology, the BOX Trading Host would be capable of opening an individual options class within seconds after the opening of trading of the underlying security and opening additional classes in successive seconds. This ability of the BOX Trading Host to start opening the market sooner would allow BOX to open individual classes quicker than it currently does today and to complete the opening process in a shorter timeframe. The BOX Trading Host could facilitate a quicker opening than it currently provides if it could facilitate the opening of options classes closer to the opening for the underlying security and spread the opening of classes over seconds rather than minutes.

BOX Market Maker obligations during the Pre-Opening Phase are currently to provide continuous, two-sided quotes according to BOX minimum standards commencing the minute preceding the scheduled opening of the market for the underlying security. The BOX Trading Host only needs Market Maker quotes at the opening of the underlying security to be calculated into the Theoretical Opening Price (''TOP'') and subsequently to be included in the Opening Match price. This proposed rule change does not affect the ability of BOX Market Makers to maintain a fair and orderly market, nor does it relieve them of that obligation. However, the proposed rule requires Market Makers to be quoting at the open and should encourage Market Makers to provide tighter quotes prior to the Opening Match. The BOX Trading Host will still continue to accept continuous, two-sided quotes and broadcast the TOP during the Pre-Opening Phase.

2. Statutory Basis

The basis under the Act for this proposed rule change is the requirement under Section 6(b)(5)[4] that an exchange have rules that are designed to prevent fraudulent and manipulative practices, to promote just and equitable principles of trade, to foster cooperation and coordination with persons engaged in regulating, clearing, settling, processing information with respect to, and facilitating transactions in securities, to remove impediments to and perfect the mechanism for a free and open market and a national market system, and, in general, to protect investors and the public interest. In particular, the Exchange believes that the proposed rule change will provide a quicker, more efficient, fair, and orderly market opening process.

*B. Self-Regulatory Organization's Statement on Burden on Competition*

The Exchange does not believe that the proposed rule change will impose any burden on competition not necessary or appropriate in furtherance of the purposes of the Act.

*C. Self-Regulatory Organization's Statement on Comments on the Proposed Rule Change Received From Members, Participants or Others*

The Exchange has neither solicited nor received comments on the proposed rule change.

**III. Solicitation of Comments**

Interested persons are invited to submit written data, views, and arguments concerning the foregoing, including whether the proposed rule change, as amended, is consistent with the Act. Comments may be submitted by any of the following methods:

*Electronic Comments*

- Use the Commission's Internet comment form (*http://www.sec.gov/rules/sro.shtml*); or
- Send an e-mail to *rule-comments@sec.gov.* Please include File No. SR–BSE–2005–49 on the subject line.

*Paper Comments*

- Send paper comments in triplicate to Jonathan G. Katz, Secretary, Securities and Exchange Commission, Station Place, 100 F Street, NE., Washington, DC 20549–9303.

All submissions should refer to File Number SR–BSE–2005–49. This file number should be included on the subject line if e-mail is used. To help the Commission process and review your comments more efficiently, please use only one method. The Commission will post all comments on the Commissions Internet Web site (*http://www.sec.gov/rules/sro.shtml*). Copies of the submission, all subsequent amendments, all written statements with respect to the proposed rule change that are filed with the Commission, and all written communications relating to the proposed rule change between the Commission and any person, other than those that may be withheld from the public in accordance with the provisions of 5 U.S.C. 552, will be available for inspection and copying in the Commission's Public Reference Room. Copies of the filing also will be available for inspection and copying at the principal office of BSE. All

[3] In Amendment No. 1, BSE modified the proposed rule text to clarify the timing of the opening process and also requested accelerated approval of the proposal.

[4] 15 U.S.C. 78f(b)(5).

comments received will be posted without change; the Commission does not edit personal identifying information from submissions. You should submit only information that you wish to make available publicly. All submissions should refer to File Number SR–BSE–2005–49 and should be submitted on or before January 19, 2006.

**IV. Commission's Findings and Order Granting Accelerated Approval of Proposed Rule Change**

The Commission finds that the proposed rule change, as amended, is consistent with the requirements of the Act and the rules and regulations thereunder applicable to a national securities exchange.[5] Specifically, the Commission believes that the proposal is consistent with Section 6(b)(5) of the Act,[6] which requires, among other things, that the rules of national securities exchange be designed to prevent fraudulent and manipulative practices, to promote just and equitable principles of trade, to remove impediments to and perfect the mechanism for a free and open market and a national market system, and, in general, to protect investors and the public interest.

The Commission notes that, on account of enhancements to BOX's technology, BSE is proposing to allow BOX to open trading in an options series promptly following the opening of the underlying security and to complete the opening of all the classes in that series without the existing mandated one-minute opening increments for each class. The Exchange represents that the absence of such specified intervals for opening each class of options in a series would allow the opening to be completed within seconds, rather than minutes. The Commission believes that a faster opening should benefit investors because it would allow them to begin trading closer to the time of the opening of the underlying security, thus allowing investors to manage their risks better as well as enhancing competition among the options markets.

The Commission notes that the proposal would also modify the requirement regarding when BOX Market Makers must begin quoting in accordance with BOX minimum standards. Specifically, the proposal would require BOX Market Makers to start quoting at the actual opening of the market for the underlying security, rather than one minute preceding the scheduled opening of the market for the underlying security. The Exchange represents that BOX Market Maker quotes are not needed until the actual opening of the underlying security, and that requiring Market Makers to quote at the opening, rather than earlier, should encourage BOX Market Makers to provide tighter quotes.

The Commission finds good cause, pursuant to Section 19(b)(2) of the Act,[7] for approving the proposed rule change, as amended, prior to the 30th day of the date of publication of the notice thereof in the **Federal Register**. The Commission notes that the proposed rule change seeks to provide a faster opening on BOX. The Commission believes that granting accelerated approval to this proposal would allow BOX to more quickly begin to conduct faster openings, thus affording investors the benefits that should flow from the proposal sooner.[8]

**V. Conclusion**

*It is therefore ordered,* pursuant to Section 19(b)(2) of the Act,[9] that the proposed rule change (SR–BSE–2005–49), as amended, is hereby approved on an accelerated basis.

For the Commission, by the Division of Market Regulation, pursuant to delegated authority.[10]

**Jonathan G. Katz,**

*Secretary.*

[FR Doc. E5–8045 Filed 12–28–05; 8:45 am]

BILLING CODE 8010–01–P

[5] In approving this proposal, the Commission has considered the proposed rule's impact on efficiency, competition, and capital formation. 15 U.S.C. 78c(f).

[6] 15 U.S.C. 78f(b)(5).

[7] 15 U.S.C. 78s(b)(2).

[8] The Commission notes that Chapter V, Section 9 of the BOX Rules, which govern BOX's opening process, was approved as a pilot program scheduled to expire on August 6, 2006. The proposed changes to this rule in the instant filing, while modifying the opening process, would not extend or otherwise affect the duration of the pilot, which is scheduled to end on August 6, 2006.

[9] 15 U.S.C. 78s(b)(2).

[10] 17 CFR 200.30–3(a)(12).

---

## SECURITIES AND EXCHANGE COMMISSION

**[Release No. 34–53006; File No. SR–NASD–2005–148]**

## Self-Regulatory Organizations; National Association of Securities Dealers, Inc.; Notice of Filing and Order Granting Accelerated Approval of Proposed Rule Change Relating to Fees for Non-NASD Members Using Nasdaq's INET Facility

December 22, 2005.

Pursuant to Section 19(b)(1) of the Securities Exchange Act of 1934 (''Act''),[1] and Rule 19b–4 thereunder,[2] notice is hereby given that on December 9, 2005, the National Association of Securities Dealers, Inc. (''NASD''), through its subsidiary, The Nasdaq Stock Market, Inc. (''Nasdaq''), filed with the Securities and Exchange Commission (''Commission'') the proposed rule change as described in Items I and II below, which Items have been prepared by Nasdaq. The Commission is publishing this notice to solicit comments on the proposed rule change from interested persons, and at the same time is granting accelerated approval of the proposed rule change.

**I. Self-Regulatory Organization's Statement of the Terms of Substance of the Proposed Rule Change**

Nasdaq proposes to modify the pricing for non-members using Nasdaq's INET Facility. Nasdaq requests approval to implement the proposed rule change retroactively to December 9, 2005. The text of the proposed rule change is below. Proposed new language is in *italics*.

* * * * *

**7010. System Services**

(a)–(v) No Change.

**(w) INET System Order Execution**

(1) No Change.

*(2) The fees applicable to non-members using Nasdaq's INET Facility shall be the fees established for members under Rule 7010(w), as established by SR–NASD–2005–128 and amended by SR–NASD–2005–147, and as applied to non-members by SR–NASD–2005–128 and SR–NASD–2005–148.*

* * * * *

**II. Self-Regulatory Organization's Statement of the Purpose of, and Statutory Basis for, the Proposed Rule Change**

In its filing with the Commission, Nasdaq included statements concerning the purpose of and basis for the proposed rule change and discussed any comments it received on the proposed rule change. The text of these statements may be examined at the places specified in Item III below. Nasdaq has prepared summaries, set forth in sections A, B, and C below, of the most significant aspects of such statements.

[1] 15 U.S.C. 78s(b)(1).

[2] 17 CFR 240.19b–4.

*A. Self-Regulatory Organization's Statement of the Purpose of, and Statutory Basis for, the Proposed Rule Change*

1. Purpose

In SR–NASD–2005–147,[3] which applies to NASD members, Nasdaq modified the fee schedule for its INET Facility. In this filing, Nasdaq is proposing to apply the same modification to non-NASD members that use Nasdaq's INET Facility. In summary, SR–NASD–2005–147: (1) Corrected the credit and fee schedule for American Stock Exchange (''Amex'') and New York Stock Exchange (''NYSE'') order executions that were incorrectly inverted in the original fee schedule; (2) codified current INET fees for orders executed as part of the Nasdaq Opening or Closing Cross Process; (3) codified current INET fee practices of revenue sharing for Tape B securities; (4) codified the current INET fee structure governing connectivity and terminal charges for its facilities; and (5) established a new uniform, tiered fee-structure for orders routed to the NYSE through DOT. Nasdaq states that an important objective of this proposal is to ensure uniform treatment under NASD's rules of members and non-members alike. Nasdaq requests that the Commission approve this filing retroactively as of December 9, 2005, and that the approval be granted on an accelerated basis.

2. Statutory Basis

Nasdaq believes that the proposed rule change is consistent with the provisions of Section 15A of the Act,[4] in general, and with Section 15A(b)(5) of the Act,[5] in particular, in that the proposed rule change provides for the equitable allocation of reasonable dues, fees, and other charges among members and issuers and other persons using any facility or system which the NASD operates or controls. Nasdaq states that an important objective of this proposal is to ensure uniform treatment under the NASD's rules of members and non-members alike.

*B. Self-Regulatory Organization's Statement on Burden on Competition*

Nasdaq does not believe that the proposed rule change will result in any burden on competition that is not necessary or appropriate in furtherance of the purposes of the Act.

*C. Self-Regulatory Organization's Statement on Comments on the Proposed Rule Change Received From Members, Participants or Others*

Nasdaq states that written comments were neither solicited nor received.

**III. Solicitation of Comments**

Interested persons are invited to submit written data, views, and arguments concerning the foregoing, including whether the proposed rule change is consistent with the Act. Comments may be submitted by any of the following methods:

*Electronic Comments*

- Use the Commission's Internet comment form (*http://www.sec.gov/rules/sro.shtml*); or
- Send an e-mail to *rule-comments@sec.gov*. Please include File Number SR–NASD–2005–148 on the subject line.

*Paper Comments*

- Send paper comments in triplicate to Jonathan G. Katz, Secretary, Securities and Exchange Commission, 100 F Street, NE., Washington, DC 20549–9303.

All submissions should refer to File Number SR–NASD–2005–148. This file number should be included on the subject line if e-mail is used. To help the Commission process and review your comments more efficiently, please use only one method. The Commission will post all comments on the Commission's Internet Web site (*http://www.sec.gov/rules/sro.shtml*). Copies of the submission, all subsequent amendments, all written statements with respect to the proposed rule change that are filed with the Commission, and all written communications relating to the proposed rule change between the Commission and any person, other than those that may be withheld from the public in accordance with the provisions of 5 U.S.C. 552, will be available for inspection and copying in the Commission's Public Reference Room. Copies of such filing also will be available for inspection and copying at the principal office of the NASD. All comments received will be posted without change; the Commission does not edit personal identifying information from submissions. You should submit only information that you wish to make available publicly. All submissions should refer to File Number SR–NASD–2005–148 and should be submitted on or before January 19, 2006.

**IV. Commission's Findings and Order Granting Accelerated Approval of Proposed Rule Change**

The Commission finds that the proposed rule change is consistent with the requirements of the Act and the rules and regulations thereunder applicable to a self-regulatory organization.[6] Specifically, the Commission believes that the proposed rule change is consistent with Section 15A(b)(5) of the Act,[7] which requires that the rules of the self-regulatory organization provide for the equitable allocation of reasonable dues, fees, and other charges among members and issuers and other persons using any facilities or system which it operates or controls.

The Commission notes that this proposal would retroactively modify pricing for non-NASD members using Nasdaq's INET Facility to December 9, 2005. This proposal would permit the schedule for non-NASD members to mirror the schedule applicable to NASD members that became effective December 9, 2005, pursuant to SR–NASD–2005–147.

The Commission finds good cause for approving the proposed rule change prior to the 30th day of the date of publication of the notice thereof in the **Federal Register.** The Commission notes that the proposed fees for non-NASD members are identical to those in SR–NASD–2005–147, which implemented those fees for NASD members and which became effective as of December 9, 2005. The Commission notes that this change will promote consistency in Nasdaq's fee schedule by applying the same pricing schedule with the same date of effectiveness for both NASD members and non-NASD members. Therefore, the Commission finds that there is good cause, consistent with Section 19(b)(2) of the Act,[8] to approve the proposed change on an accelerated basis.

**V. Conclusion**

*It is therefore ordered*, pursuant to Section 19(b)(2) of the Act,[9] that the proposed rule change (File No. SR–NASD–2005–148), is approved on an accelerated basis.

[3] SR–NASD–2005–147, which Nasdaq filed with the Commission on December 9, 2005, was effective upon filing pursuant to Section 19(b)(3)(A)(ii) of the Act and Rule 19b–4(f)(2) thereunder.

[4] 15 U.S.C. 78*o*–3.

[5] 15 U.S.C. 78*o*–3(b)(5).

[6] The Commission has considered the proposed rule's impact on efficiency, competition and capital formation. 15 U.S.C. 78c(f).

[7] 15 U.S.C. 78*o*–3(b)(5).

[8] 15 U.S.C. 78s(b)(2).

[9] 15 U.S.C. 78s(b)(2).

For the Commission, by the Division of Market Regulation, pursuant to delegated authority.[10]

**Jonathan G. Katz,**

*Secretary.*

[FR Doc. E5–8053 Filed 12–28–05; 8:45 am]

**BILLING CODE 8010–01–P**

## SECURITIES AND EXCHANGE COMMISSION

**[Release No. 34–52997; File No. SR–NASD–2005–143]**

## Self-Regulatory Organizations; National Association of Securities Dealers, Inc.; Notice of Filing and Immediate Effectiveness of Proposed Rule Change To Allow Nasdaq Capital Market Issuers That Transfer Their Listing to the Nasdaq National Market To Apply the Amount of the Capital Market Entry Fee Toward the Entry Fee Payable for Listing on the National Market, and To Make Other Clarifying Changes

December 22, 2005.

Pursuant to Section 19(b)(1) of the Securities Exchange Act of 1934 (''Act''),[1] and Rule 19b–4 thereunder,[2] notice is hereby given that on December 1, 2005, the National Association of Securities Dealers, Inc. (''NASD''), through its subsidiary, The Nasdaq Stock Market, Inc. (''Nasdaq''), filed with the Securities and Exchange Commission (''Commission'') the proposed rule change as described in Items I, II and III below, which Items have been prepared by Nasdaq. Nasdaq filed the proposal as a ''non-controversial'' proposed rule change pursuant to Section 19(b)(3)(A) of the Act[3] and Rule 19b–4(f)(6) thereunder,[4] which renders the proposal effective upon filing with the Commission.[5] The Commission is publishing this notice to solicit comments on the proposed rule change from interested persons.

### I. Self-Regulatory Organization's Statement of the Terms of Substance of the Proposed Rule Change

Nasdaq proposes to add new language to NASD Rules 4510(a) and 4520(a) to allow Nasdaq Capital Market issuers that transfer their listing to the Nasdaq National Market to apply the amount of the Capital Market entry fee previously paid to the entry fee payable for listing on the National Market, and to make other clarifying changes. The text of the proposed rule change is below. Proposed additions are in *italics.*

4510. The Nasdaq National Market

(a) Entry Fee

(1)–(8) No change.

*(9) An issuer that transfers its listing from The Nasdaq Capital Market to The Nasdaq National Market shall pay the entry fee described in this Rule 4510(a) less the entry fee that was previously paid by the issuer to Nasdaq in connection with listing on The Nasdaq Capital Market. Such issuer is not required to pay the application fee described in Rule 4510(a) in connection with the application to transfer listing.*

*(10) An issuer that submits an application for listing on The Nasdaq Capital Market, but prior to listing revises its application to seek listing on The Nasdaq National Market, is not required to pay the application fee described in Rule 4510(a) in connection with the revised application.*

(b)–(e) No change.

4520. The Nasdaq Capital Market

(a) Entry Fee

(1)–(7) No change.

*(8) An issuer that submits an application for listing on The Nasdaq National Market, but prior to listing revises its application to seek listing on The Nasdaq Capital Market, is not required to pay the application fee described in Rule 4520(a) in connection with the revised application.*

(b)–(d) No change.

* * * * *

### II. Self-Regulatory Organization's Statement of the Purpose of, and Statutory Basis for, the Proposed Rule Change

In its filing with the Commission, Nasdaq included statements concerning the purpose of, and basis for, the proposed rule change and discussed any comments it received on the proposal. The text of these statements may be examined at the places specified in Item IV below. Nasdaq has prepared summaries, set forth in Sections A, B, and C below, of the most significant aspects of such statements.

*A. Self-Regulatory Organization's Statement of the Purpose of, and Statutory Basis for, the Proposed Rule Change*

1. Purpose

The purpose of the proposed rule change is to permit existing Nasdaq issuers that seek to transfer their listing from the Nasdaq Capital Market to the Nasdaq National Market to apply the amount of the Capital Market entry fee previously paid to the entry fee payable for listing on the National Market. Currently, issuers listing a class of securities on the Nasdaq Capital Market pay an entry fee based on total shares outstanding that ranges from $25,000 to $50,000.[6] Under the existing rules, an issuer that later applies to ''phase up'' its listing from the Capital Market to the National Market is required to pay the applicable entry fee for new issuers listing on the National Market, which currently ranges from $100,000 to $150,000.[7]

Under the proposed rule change, a Capital Market issuer that applies to ''phase up'' its listing would pay the applicable National Market entry fee less the amount of the entry fee that it paid to list on the Capital Market. Because the issuer previously paid a non-refundable application fee when applying to list on the Capital Market, the issuer would not be required to pay an additional application fee in connection with the transfer to the National Market. For example, an issuer that paid an entry fee of $50,000 (of which $5,000 was a non-refundable application fee) upon inclusion of a class of securities in the Capital Market would receive a $45,000 credit toward the applicable National Market entry fee upon phase up and the application fee would be waived.

Nasdaq believes that the reduction in fees resulting from the entry fee credit is justified by the corresponding reduction in time and effort needed to review a phase up application. Nasdaq's experience has shown that the review process for phase up applications generally is less time-consuming for the staff than the review required for issuers that list on the National Market after an initial public offering or through other means. Furthermore, the proposed rule change creates an incentive for issuers that list on the Capital Market to transfer to the National Market rather than seek a listing elsewhere, thereby promoting competition between Nasdaq and exchange markets.

[10] 17 CFR 200.30–3(a)(12).

[1] 15 U.S.C. 78s(b)(1).

[2] 17 CFR 240.19b–4.

[3] 15 U.S.C. 78s(b)(3)(A).

[4] 17 CFR 240.19b–4(f)(6).

[5] As required by Rule 19b–4(f)(6)(iii), 17 CFR 240.19b–4(f)(6)(iii), the Nasdaq submitted written notice of its intent to file the proposed rule change, along with a brief description and text of the proposed rule change, at least five business days prior to the date of filing.

[6] NASD Rule 4520(a)(1). This fee includes a $5,000 non-refundable application fee that is submitted with the issuer's initial listing application. The remainder of the entry fee is assessed on the date of entry on the Capital Market.

[7] NASD Rule 4510(a)(1). This fee includes a $5,000 non-refundable application fee that is submitted with the issuer's initial listing application. The remainder of the entry fee is assessed on the date of entry on the National Market. Under Rule 4510(a)(3), Closed-End Funds pay an entry fee of $5,000 per class of securities (of which $1,000 is a non-refundable application fee).

Nasdaq also proposes to clarify that an issuer that applies for listing on one tier of Nasdaq, but prior to listing decides to apply to list instead on the other tier, is not required to pay an additional application fee in connection with its revised application. For example, an issuer that submits an application for inclusion of a class of securities in the Nasdaq National Market is required to pay a $5,000 nonrefundable application fee that is submitted with the issuer's application. If prior to listing the issuer decides to apply to list on the Nasdaq Capital Market instead, the issuer would not be required to pay an additional $5,000 application fee in connection with its revised application.

2. Statutory Basis

Nasdaq believes that the proposed rule change is consistent with the provisions of Section 15A of the Act,[8] in general, and with Sections 15A(b)(5)[9] and 15A(b)(6)[10] of the Act, in particular, in that it provides for the equitable allocation of reasonable fees, dues, and other charges among members and issuers and other persons using any facility or system which the Nasdaq operates or controls, and is designed to remove impediments to and perfect the mechanism of a free and open market and a national market system. Nasdaq believes the proposed rule change provides for an equitable allocation of reasonable fees because, although Capital Market issuers that transfer their listing to the National Market would continue to pay an entry fee for each class of securities listed, such fee would be reduced in recognition that these issuers already paid an entry fee upon listing on the Capital Market, and that there is a corresponding reduction in the time and effort necessary to process listing applications of such companies. In addition, the proposed rule change should enhance competition among markets by allowing issuers to better evaluate the benefits of maintaining a listing on Nasdaq.

*B. Self-Regulatory Organization's Statement on Burden on Competition*

Nasdaq does not believe that the proposed rule change will result in any burden on competition that is not necessary or appropriate in furtherance of the purposes of the Act, as amended.

*C. Self-Regulatory Organization's Statement on Comments on the Proposed Rule Change Received From Members, Participants, or Others*

Nasdaq has neither solicited nor received comments on the proposed rule change.

**III. Date of Effectiveness of the Proposed Rule Change and Timing for Commission Action**

Because the foregoing proposed rule change does not: (i) Significantly affect the protection of investors or the public interest; (ii) impose any significant burden on competition; and (iii) become operative for 30 days from the date on which it was filed, or such shorter time as the Commission may designate if consistent with the protection of investors and the public interest, and Nasdaq provided the Commission with written notice of its intent to file the proposed rule change, along with a brief description and text of the proposed rule change, at least five days prior to the filing date,[11] the proposed rule change has become effective pursuant to Section 19(b)(3)(A) of the Act[12] and Rule 19b–4(f)(6) thereunder.[13]

**IV. Solicitation of Comments**

Interested persons are invited to submit written data, views, and arguments concerning the foregoing, including whether the proposed rule change is consistent with the Act. Comments may be submitted by any of the following methods:

*Electronic Comments*

- Use the Commission's Internet comment form (*http://www.sec.gov/rules/sro.shtml*); or
- Send an e-mail to *rule-comments@sec.gov*. Please include File Number SR–NASD–2005–143 on the subject line.

*Paper Comments*

- Send paper comments in triplicate to Jonathan G. Katz, Secretary, Securities and Exchange Commission, 100 F Street, NE., Washington, DC 20549–9303.

All submissions should refer to File Number SR–NASD–2005–143. This file number should be included on the subject line if e-mail is used. To help the Commission process and review your comments more efficiently, please use only one method. The Commission will post all comments on the Commission's Internet Web site (*http://www.sec.gov/rules/sro.shtml*). Copies of the submission, all subsequent amendments, all written statements with respect to the proposed rule change that are filed with the Commission, and all written communications relating to the proposed rule change between the Commission and any person, other than those that may be withheld from the public in accordance with the provisions of 5 U.S.C. 552, will be available for inspection and copying in the Commission's Public Reference Room. Copies of the filing also will be available for inspection and copying at the principal office of the NASD.

All comments received will be posted without change; the Commission does not edit personal identifying information from submissions. You should submit only information that you wish to make available publicly. All submissions should refer to File Number SR–NASD–2005–143 and should be submitted on or before January 19, 2006.

For the Commission, by the Division of Market Regulation, pursuant to delegated authority.[14]

**Jonathan G. Katz,**

*Secretary.*

[FR Doc. E5–8055 Filed 12–28–05; 8:45 am]

BILLING CODE 8010–01–P

[8] 15 U.S.C. 78*o*–3.

[9] 15 U.S.C. 78*o*–3(b)(5).

[10] 15 U.S.C. 78*o*–3(b)(6).

[11] *See* footnote 5, *supra*.

[12] 15 U.S.C. 78s(b)(3)(A).

[13] 17 CFR 240.19b–4(f)(6).

[14] 17 CFR 200.30–3(a)(12).

## SECURITIES AND EXCHANGE COMMISSION

**[Release No. 34–52998; File No. SR–NASD–2005–139]**

## Self-Regulatory Organizations; National Association of Securities Dealers, Inc.; Notice of Filing and Immediate Effectiveness of Proposed Rule Change To Amend NASD Rule 2111 to Eliminate References to NASD Rule 6440(f)(2), Which Will Be Repealed

December 22, 2005.

Pursuant to Section 19(b)(1) of the Securities Exchange Act of 1934 (''Act''),[1] and Rule 19b–4 thereunder,[2] notice is hereby given that on December 1, 2005, the National Association of Securities Dealers, Inc. (''NASD'') filed with the Securities and Exchange Commission (''Commission'') the proposed rule change as described in Items I, II and III below, which Items have been prepared by the NASD. The NASD filed the proposal as a ''non-controversial'' proposed rule change pursuant to Section 19(b)(3)(A) of the

[1] 15 U.S.C. 78s(b)(1).

[2] 17 CFR 240.19b–4.

Act[3] and Rule 19b–4(f)(6) thereunder,[4] which renders the proposal effective upon filing with the Commission.[5] The NASD proposes to implement the proposed rule change on January 9, 2006. The Commission is publishing this notice to solicit comments on the proposed rule change from interested persons.

## I. Self-Regulatory Organization's Statement of the Terms of Substance of the Proposed Rule Change

The NASD proposes to amend NASD Rule 2111 to delete two references to NASD Rule 6440(f)(2) in light of SR–NASD–2004–045,[6] which repealed that rule and will be implemented January 9, 2006. Correspondingly, the NASD will implement the instant proposed rule change on January 9, 2006. The text of the proposed rule change is below. Proposed deletions are in [brackets].

### 2111. Trading Ahead of Customer Market Orders

This version of the rule does not become effective until January 9, 2006.

(a)–(d) No change.

(e) This rule applies to limit orders that are marketable at the time they are received by the member or become marketable at a later time. Such limit orders shall be treated as market orders for purposes of this rule, however, these orders must continue to be executed at their limit price or better. If a customer limit order is not marketable when received, the limit order must be provided the full protections of IM–2110–2 [ or Rule 6440(f)(2), as applicable]. In addition, if the limit order was marketable when received and then becomes non-marketable, once the limit order becomes non-marketable, it must be provided the full protections of IM–2110–2 [or Rule 6440(f)(2), as applicable].

(f)–(g) No change.

* * * * *

## II. Self-Regulatory Organization's Statement of the Purpose of, and Statutory Basis for, the Proposed Rule Change

In its filing with the Commission, the NASD included statements concerning the purpose of, and basis for, the proposed rule change and discussed any comments it received on the proposal. The text of these statements may be examined at the places specified in Item IV below. The NASD has prepared summaries, set forth in Sections A, B, and C below, of the most significant aspects of such statements.

*A. Self-Regulatory Organization's Statement of the Purpose of, and Statutory Basis for, the Proposed Rule Change*

1. Purpose

On August 9, 2005, the Commission approved proposed rule change SR–NASD–2004–045 adopting NASD Rule 2111 (''Trading Ahead of Customer Market Orders''), which will be implemented on January 9, 2006. NASD Rule 2111 prohibits a member from trading for its own account at prices that would satisfy a customer market order in a Nasdaq or exchange-listed security, unless the member immediately thereafter executes the customer market order. In addition, NASD Rule 2111 provides that if a customer limit order is not marketable when received, or if the limit order is marketable when received and then becomes non-marketable, the limit order must be provided the full protections of IM–2110–2 (the ''Manning Rule'') or Rule 6440(f)(2), as applicable.[7]

On October 24, 2005, the NASD filed SR–NASD–2005–124 seeking to repeal NASD Rule 6440(f) because it overlaps and is generally duplicative of new NASD Rule 2111 and the Manning Rule, as amended.[8] SR–NASD–2005–124 was filed for immediate effectiveness and the implementation date is January 9, 2006. In light of the repeal of NASD Rule 6440(f), the references to NASD Rule 6440(f)(2) in NASD Rule 2111 should be deleted.

2. Statutory Basis

The NASD believes that the proposed rule change is consistent with the provisions of Section 15A(b)(6) of the Act, which requires, among other things, that NASD rules be designed to prevent fraudulent and manipulative acts and practices, to promote just and equitable principles of trade, and, in general, to protect investors and the public interest. The NASD believes that the proposed rule change will further the goals of improving the treatment of market orders and enhancing the integrity of the market by bringing consistency and clarity to its conduct rules.

*B. Self-Regulatory Organization's Statement on Burden on Competition*

The NASD believes that the proposed rule change will not impose any burden on competition that is not necessary or appropriate in furtherance of the purposes of the Act, as amended.

*C. Self-Regulatory Organization's Statement on Comments on the Proposed Rule Change Received From Members, Participants, or Others*

The NASD has neither solicited nor received comments on the proposed rule change.

## III. Date of Effectiveness of the Proposed Rule Change and Timing for Commission Action

Because the foregoing proposed rule change does not: (i) significantly affect the protection of investors or the public interest; (ii) impose any significant burden on competition; and (iii) become operative for 30 days from the date on which it was filed, or such shorter time as the Commission may designate if consistent with the protection of investors and the public interest, the proposed rule change has become effective pursuant to Section 19(b)(3)(A) of the Act[9] and Rule 19b–4(f)(6) thereunder.[10] At any time within 60 days of the filing of such proposed rule change, the Commission may summarily abrogate such rule change if it appears to the Commission that such action is necessary or appropriate in the public interest, for the protection of investors, or otherwise in furtherance of the purposes of the Act.[11]

## IV. Solicitation of Comments

Interested persons are invited to submit written data, views, and arguments concerning the foregoing, including whether the proposed rule change is consistent with the Act. Comments may be submitted by any of the following methods:

*Electronic Comments*

- Use the Commission's Internet comment form (*http://www.sec.gov/rules/sro.shtml*); or

[3] 15 U.S.C. 78s(b)(3)(A).

[4] 17 CFR 240.19b–4(f)(6).

[5] As required by Rule 19b–4(f)(6)(iii), 17 CFR 240.19b–4(f)(6)(iii), the NASD submitted written notice of its intent to file the proposed rule change, along with a brief description and text of the proposed rule change, at least five business days prior to the date of filing.

[6] *See* Securities Exchange Act Release No. 52226 (August 9, 2005), 70 FR 48219 (August 16, 2005) (SR–NASD–2004–045).

[7] At the time that the NASD filed SR–NASD–2004–045 in March of 2004, the Manning Rule afforded limit order protection to Nasdaq securities and NASD Rule 6440(f)(2) afforded a similar protection to exchange-listed securities. In August of 2005, the Commission approved SR–NASD–2004–089, which extended the Manning Rule to exchange-listed securities. *See* Securities Exchange Act Release No. 52210 (August 4, 2005), 70 FR 46897 (August 11, 2005) (SR–NASD–2004–089).

[8] NASD Rule 6440(f) generally prohibits a member from buying (selling) an exchange-listed security for its own account while such member holds an unexecuted market order or unexecuted limit order to buy (sell) such security for a customer.

[9] 15 U.S.C. 78s(b)(3)(A).

[10] 17 CFR 240.19b–4(f)(6).

[11] 15 U.S.C. 78s(b)(3)(C).

• Send an e-mail to *rule-comments@sec.gov*. Please include File Number SR–NASD–2005–139 on the subject line.

*Paper Comments*

• Send paper comments in triplicate to Jonathan G. Katz, Secretary, Securities and NASD Commission, 100 F Street, NE., Washington, DC 20549–9303.

All submissions should refer to File Number SR–NASD–2005–139. This file number should be included on the subject line if e-mail is used. To help the Commission process and review your comments more efficiently, please use only one method. The Commission will post all comments on the Commission's Internet Web site (*http://www.sec.gov/rules/sro.shtml*). Copies of the submission, all subsequent amendments, all written statements with respect to the proposed rule change that are filed with the Commission, and all written communications relating to the proposed rule change between the Commission and any person, other than those that may be withheld from the public in accordance with the provisions of 5 U.S.C. 552, will be available for inspection and copying in the Commission's Public Reference Room. Copies of such filing also will be available for inspection and copying at the principal office of the NASD.

All comments received will be posted without change; the Commission does not edit personal identifying information from submissions. You should submit only information that you wish to make available publicly. All submissions should refer to File Number SR–NASD–2005–139 and should be submitted on or before January 19, 2006.

For the Commission, by the Division of Market Regulation, pursuant to delegated authority.[12]

**Jonathan G. Katz,**

*Secretary.*

[FR Doc. E5–8064 Filed 12–28–05; 8:45 am]

**BILLING CODE 8010–01–P**

[12] 17 CFR 200.30–3(a)(12).

## SECURITIES AND EXCHANGE COMMISSION

**[Release No. 34–53017; File No. SR–NASD–2005–150]**

## Self-Regulatory Organizations; National Association of Securities Dealers, Inc.; Notice of Filing and Immediate Effectiveness of Proposed Rule Change To Modify Nasdaq's Minimum Pricing Increment Rules

December 22, 2005.

Pursuant to section 19(b)(1) of the Securities Exchange Act of 1934 (''Act'')[1] and Rule 19b–4 thereunder,[2] notice is hereby given that on December 22, 2005, the National Association of Securities Dealers, Inc. (''NASD''), through its subsidiary, The Nasdaq Stock Market, Inc. (''Nasdaq''), filed with the Securities and Exchange Commission (''Commission'') the proposed rule change as described in Items I, II, and III below, which Items have been prepared by Nasdaq. Nasdaq filed this proposal pursuant to section 19(b)(3)(A) of the Act[3] and Rule 19b–4(f)(6) thereunder,[4] therefore making the proposed rule change effective immediately upon filing. Nasdaq intends for this rule change to become operative on January 31, 2006. The Commission is publishing this notice to solicit comments on the proposed rule change from interested persons.

### I. Self-Regulatory Organization's Statement of the Terms of the Substance of the Proposed Rule Change

Nasdaq proposes to modify NASD Rules 4613, 4701, 4710, 4901, 4904, and 6330 to align Nasdaq's rules on minimum pricing increments with the corresponding provisions in the Commission's Regulation NMS.

The text of the proposed rule change is below. Proposed new language is in *italics;* proposed deletions are in brackets.

* * * * *

**4613. Character of Quotations**

(a) Quotation Requirements and Obligations

(1) Two-Sided Quote Obligation. For each security in which a member is registered as a market maker, the member shall be willing to buy and sell such security for its own account on a continuous basis and shall enter and maintain a two-sided quotation (''Principal Quote''), which is attributed to the market maker by a special maker participant identifier (''MPID'') and is displayed in the Nasdaq Quotation Montage at all times, subject to the procedures for excused withdrawal set forth in Rule 4619.

(A) No change

(B) Minimum Price Variation [for Decimal-based Quotations]—The minimum quotation increment for Nasdaq *National Market and Capital Market* securities [authorized for decimal pricing] shall be $0.01 *for quotations priced at or above $1.00 per share and $0.0001 for quotations priced below $1.00 per share; provided, however, that if the Securities and Exchange Commission (''SEC'') permits, with respect to any security, the display, rank or acceptance of quotations priced at or above $1.00 per share in an increment smaller than $0.01, then the minimum quotation increment for such a security shall be the minimum permitted by the SEC or $0.0001, whichever is greater.* Quotations failing to meet this standard shall be rejected.

(2) and (3) No change

(b) through (e) No change

* * *

**4701. Definitions**

Unless stated otherwise, the terms described below shall have the following meaning:

(a) through (ll) No change

(mm) The term ''Pegged'' shall mean, for priced limit orders so designated, that after entry into the Nasdaq Market Center, the price of the order is automatically adjusted by the Nasdaq Market Center in response to changes in either the Nasdaq Market Center inside bid or offer or the national best bid or offer, as appropriate. A Nasdaq Market Center Participant may enter either a Regular Pegged Order or a Reverse Pegged Order.

A Nasdaq Market Center Participant entering a Regular Pegged Order may specify that the price of the order will deviate from either the Nasdaq inside quote on the same side of the market or the national best bid or offer on the same side of the market by an offset amount of $0 to $0.99. A Nasdaq Market Center Participant entering a Reverse Pegged Order may specify that the price of the order will deviate from either the Nasdaq inside quote on the contra side of the market or the national best bid or offer on the contra side of the market by an offset amount of $0.01 to $0.99. The market participant entering a Pegged Order may (but is not required to) specify a cap price, to define a price at which pegging of the order will stop and the order will be permanently converted into an unpegged limit order. Pegged Orders shall not be available for ITS Securities. Pegged orders shall not be eligible for routing as set out in Rule 4714. *Offset amounts for Pegged Orders are priced in $0.01 increments. However, if at any time an offset amount specified by a Nasdaq Market Center Participant does not result in an offer or a bid that is fully compliant with the minimum price variation provisions of Rule 4613, then, for an offer, the applicable offset amount will be the smallest amount that results in a compliant order and is greater than the specified offset amount, and, for a bid, the applicable offset amount will be the largest amount that results in a compliant order and is smaller than the specified offset amount.*

(nn) The term ''Discretionary'' shall mean,

[1] 15 U.S.C. 78s(b)(1).

[2] 17 CFR 240.19b–4.

[3] 15 U.S.C. 78s(b)(3)(A).

[4] 17 CFR 240.19b–4(f)(6).

(1) for priced limit orders in Nasdaq listed securities so designated, an order that when entered into the Nasdaq Market Center has both a displayed bid or offer price, as well as a non-displayed discretionary price range in which the participant is also willing to buy or sell, if necessary. The displayed price may be fixed or may be pegged to deviate from the Nasdaq inside quote or the national best bid or offer on the same side of the market by an offset amount of $0 to $0.99. The pegging of the Discretionary Order may be capped in the same manner as that of a Pegged Order. The discretionary price range of a Discretionary Order that is pegged will be adjusted to follow the pegged displayed price. *Discretionary price ranges (and offset amounts, if any) for Discretionary Orders are priced in $0.01 increments. Compliance with the minimum price variation provisions of Rule 4613 in connection with range adjustments and pegging in Discretionary Orders will be ensured in the same manner as for Pegged Orders.* Discretionary Orders for Nasdaq listed securities shall be eligible for routing as set out in Rule 4714.

(2) No change

(oo) through (vv) No change

* * *

**4710. Participant Obligations in the Nasdaq Market Center**

(a) No change

(b) Non-Directed Orders

(1) through (4) No change

(5) If a Nasdaq Market Maker's Attributable Quote/Order is reduced to less than a round-lot amount on one side of the market due to Nasdaq Market Center executions, the Nasdaq Market Center will close the Market Maker's quote in the Nasdaq Market Center on that side of the market, and the Nasdaq Market Maker will be permitted a grace period of 30 seconds within which to take action to restore its Attributable Quote/Order, if the market maker has not authorized use of the AQR functionality or does not otherwise have an Attributable Quote/Order on both sides of the market in the system. A Nasdaq Market Maker that fails to transmit an Attributable Quote/Order in a security within the allotted time will have the exhausted side of its quotation restored by the system at a price $0.01 inferior to the lowest displayed bid price or the highest displayed offer price in that security as appropriate. If all bids and/or offers are exhausted so that there are no longer any Quote/Orders displayed on the bid and/or offer side of the market, the system will refresh a market maker's exhausted bid or offer quote to a normal unit of trading priced $0.01 inferior to the lesser of either: a) the last valid displayed inside bid/offer in the security before all such bids/offers were exhausted; or b) the market maker's last displayed bid/offer before exhaustion. If the resulting bid/offer quote would create a locked or crossed market, the Nasdaq Market Center will instead re-open the exhausted market maker's bid/offer quote at a price $0.01 inferior to the unexhausted inside bid/offer in that security. *If at any time an offer derived pursuant to this paragraph would not be fully compliant with the minimum price variation provisions of Rule 4613, then the system will create an offer that is priced higher than the non-compliant offer by the smallest amount necessary to make such an offer compliant with Rule 4613.* If at any time this automatic quote restoration process would result in the creation of a bid/offer of less than $0.01, the system will refresh that bid/offer to a price of $0.01. Except as provided in subparagraph (b)(6) of this rule, a Nasdaq Market Maker that withdraws from a security may not re-register in the system as a market maker in that security for twenty (20) business days.

(6) through (8) No change

(c) through (e) No change

* * *

**4901. Definitions**

Unless stated otherwise, the terms described below shall have the following meaning:

(a) through (q) No change

(r) The term ''Pegged'' shall mean, for priced limit orders so designated, that after entry into the System, the price of the order is automatically adjusted by the System in response to changes in the Nasdaq inside bid or offer (for Nasdaq-listed securities) or the national best bid or offer (for ITS securities), as appropriate. The Participant entering a Pegged Order can specify that order's price will either equal the inside quote or improves the inside quote by an amount set by the entering party on the same side of the market (a ''Regular Pegged Order'') or offset the inside quote on the contra side of the market by an amount (the ''Offset Amount'') set by the Participant (e.g., $0.01 less than the inside offer or $0.02 more than the inside bid) (a ''Reverse Pegged Order''). The Participant entering a Pegged Order may (but is not required to) specify a limit price, to define a price at which pegging of the order will stop and the order will be permanently converted into an un-pegged limit order at limit price. This order type is available for Nasdaq-listed and Exchange-listed securities. *Offset amounts for Pegged Orders are priced in $0.01 increments. However, if at any time an offset amount specified by a Participant does not result in an offer or a bid that is fully compliant with the minimum price variation provisions of Rule 4904, then, for an offer, the applicable offset amount will be the smallest amount that results in a compliant order and is greater than the specified offset amount, and, for a bid, the applicable offset amount will be the largest amount that results in a compliant order and is smaller than the specified offset amount.*

(s) through (w) No change

* * *

**4904. Entry and Display of Orders**

(a) No change

(b) Display of Orders—The System will display orders submitted to the System as follows:

(1) and (2) No change

(3) *Minimum Price Variation—The minimum quotation increment for System Securities shall be $0.01 for quotations priced at or above $1.00 per share and $0.0001 for quotations priced below $1.00 per share; provided, however, that if the Securities and Exchange Commission (''SEC'') permits, with respect to any security, the display, rank or acceptance of quotations priced at or above $1.00 per share in an increment smaller than $0.01, then the minimum quotation increment for such a security shall be the minimum permitted by the SEC or $0.0001, whichever is greater. Quotations failing to meet this standard shall be rejected.*

*(4)* Exceptions—The following exceptions shall apply to the display parameters set forth in paragraphs (1) and (2) above:

(A) No change

(B) [Minimum Increments and Rounding—The minimum trading increment for System quotations priced $1.00 and above is $.01. For quotations priced below $1.00 the minimum increment is $.0001.

(i) For System display purposes, quotations in sub-penny increments $1.00 and above will be rounded down (for bids) or up (for offers) by the System to the nearest $.01 increment. Orders so rounded shall have no superior execution priority compared to orders previously submitted at the relevant $.01 increment.

(ii) For Nasdaq Market Center display purposes, any quotations in sub-penny increments shall be rounded down (for bids) and up (for offers) to the nearest $.01 increment. Sub-penny quotations that are rounded for display purposes shall be executed at their actual price, rather than the rounded price at which they are displayed.

(C)] Reserve Size—Reserve Size shall not be displayed in the System, but shall be accessible as described in Rule 4905.

[(D)] *(C)* Discretionary & Hunter Orders—Hunter Orders, and the discretionary portion of Discretionary Orders shall be available for execution only upon the appearance of contra-side marketable trading interest, and shall be executed pursuant to Rule 4905.

* * *

**6330. Obligations of CQS Market Makers**

(a) through (c) No change

(d) Minimum Price Variation [for Decimal-based Quotations]

(1) The minimum quotation increment [for securities authorized for decimal pricing as part of the SEC-approved Decimals Implementation Plan for the Equities and Options Markets] shall be $0.01 *for quotations priced at or above $1.00 per share and $0.0001 for quotations priced below $1.00 per share; provided, however, that if the Securities and Exchange Commission (''SEC'') permits, with respect to any security, the display, rank or acceptance of quotations priced at or above $1.00 per share in an increment smaller than $0.01, then the minimum quotation increment for such a security shall be the minimum permitted by the SEC or $0.0001, whichever is greater. Quotations failing to meet this standard shall be rejected.*

*(2) When a quotation properly (not in violation of paragraph (1) above) priced in an increment of less than $0.01 is routed for execution via the ITS System to a market that does not accept quotations in increments of less than $0.01, such a quotation is rounded down (for bids) or up (for offers) to the nearest $0.01 increment.*

* * * * *

## II. Self-Regulatory Organization's Statement of the Purpose of, and Statutory Basis for, the Proposed Rule Change

In its filing with the Commission, Nasdaq included statements concerning the purpose of and basis for the proposed rule change and discussed any comments it received on the proposed rule change. The text of these statements may be examined at the places specified in Item IV below. Nasdaq has prepared summaries, set forth in sections A, B, and C below, of the most significant aspects of such statements.

*A. Self-Regulatory Organization's Statement of the Purpose of, and Statutory Basis for, the Proposed Rule Change*

1. Purpose

The purpose of this change is to align Nasdaq's rules with Rule 612 of the Commission's Regulation NMS.[5] Consistent with that rule, neither Nasdaq nor Nasdaq's Brut facility will accept sub-penny quotes[6] priced at $1.00 or above, except for sub-penny quotes in securities for which sub-penny quoting is authorized by the Commission at higher price levels. For quotes priced below $1.00 (and for quotes in securities exempted by the Commission), Nasdaq and Brut[7] will accept sub-penny quotes but only in increments of at least $0.0001, as specified in Rule 612.

The proposed rule language also clarifies how Nasdaq will handle several special situations that will arise in implementing Rule 612. First, if a proper sub-penny quote submitted to Nasdaq is routed via the ITS System to a different market for execution, and such market does not accept sub-penny orders, then such quote will be rounded up (for offers) or down (for bids) to the nearest one cent increment. However, Nasdaq notes that any market routing an order to any facility of Nasdaq must be prepared to accept a sub-penny execution even if such market itself does not accept sub-penny orders. A proper execution priced in an increment of less than a cent would remain valid even if the sending market failed to meet its responsibilities in this regard (and the sending market would then have to assume full responsibility for any resulting losses and other harm).

Second, for pegged and discretionary orders, the new rule language clarifies that participants must continue to specify the offset amounts and the discretionary price ranges in whole cents. This will remain the case even when the stock can be properly priced in sub-penny increments.

Third, in the case of pegged or discretionary orders, when changes in the underlying price being ''pegged'' would result in a sub-penny order priced over $1.00, the rule language provides that the ''offset'' amount be deemed slightly higher (for offers) or lower (for bids) than specified by the market participant, as necessary to create a compliant quote. For example, if the offset amount specified by a market participant for a pegged offer is $0.01 and the national best offer is $0.995, this would result in a pegged offer of $1.005, which would violate Rule 612. The proposed rule states that in this situation Nasdaq should deem the offset amount to be higher than specified by the smallest amount necessary to produce a quote priced in whole cents. Therefore, in this example, under the proposed rule the offset amount would be deemed $0.015, producing a pegged offer of $1.01. In the case of discretionary orders, this same logic and approach will apply in determining the discretionary price range vis-à-vis the displayed price and in determining the offset amount if the displayed price is ''pegged'' to the national best bid or offer. In each case, the discretionary price range limit amount and the offset amount will be deemed higher (for offers) or lower (for bids) by the smallest amount necessary to produce a Rule 612-compliant quote.

Fourth, the same approach will be used when automatically refreshing the quotes of a market participant that has authorized the use of the Auto Quote Refresh (''AQR'') functionality. NASD Rule 4710(b)(5) describes the algorithm used to determine AQR pricing, and it could result in a sub-penny offer priced over $1.00 (generally, if the stock is trading in sub-penny increments just below the $1 threshold). In such a situation, the AQR-generated offer price will be adjusted upwards to the next whole penny.

Nasdaq notes that while it generally (subject to any security-specific exemptions the Commission may grant) will not accept sub-penny quotes priced above $1.00, it will, consistent with Rule 612, still permit trade executions at such prices. For example, trades in sub-penny increments priced above $1.00 could be produced in Nasdaq's Opening Cross or Closing Cross. Nasdaq will permit such trades to proceed. At the same time, Nasdaq notes that, because of technological limitations, trades will never be executed in increments below $0.0001, but will always be rounded up to the nearest $0.0001 increment. Such a situation could arise, for example, in the Opening or Closing Cross if the bids and offers for a stock are priced below $1.00 in $0.0001 increments. Under such a scenario, the system would round the execution price up to the next $0.0001 increment.

2. Statutory Basis

Nasdaq believes that the proposed rule change is consistent with the provisions of Section 15A of the Act,[8] in general and with Section 15A(b)(6) of the Act,[9] in particular, in that it is designed to promote just and equitable principles of trade, to remove impediments to and perfect the mechanism of a free and open market. Specifically, the proposal aligns Nasdaq's rules on sub-penny trading with the Commission's Regulation NMS.

*B. Self-Regulatory Organization's Statement on Burden on Competition*

Nasdaq does not believe that the proposed rule change will result in any burden on competition that is not necessary or appropriate in furtherance of the purposes of the Act.

*C. Self-Regulatory Organization's Statement on Comments on the Proposed Rule Change Received From Members, Participants, or Others*

Written comments were neither solicited nor received.

## III. Date of Effectiveness of the Proposed Rule Change and Timing for Commission Action

This proposal has become effective pursuant to section 19(b)(3)(A) of the Act[10] and subparagraph (f)(6) of Rule 19b–4 thereunder[11] because the proposal: (1) Does not significantly affect the protection of investors or the public interest, (2) does not impose any significant burden on competition, and (3) by its terms does not become operative for 30 days after the date of this filing, or such shorter time as the Commission may designate, if consistent with the protection of investors and the public interest.[12]

[5] 17 CFR 242.612.

[6] In this filing, ''quote'' or ''quotation'' is used to denote both quotations and orders.

[7] This filing does not contain any changes to the rules of the INET System. If any such changes are necessary, they will be made in a separate filing at a later date.

[8] 15 U.S.C. 78o–3.

[9] 15 U.S.C. 78o–3(b)(6).

[10] 15 U.S.C. 78s(b)(3)(A).

[11] 17 CFR 240.19b–4(f)(6).

[12] Pursuant to Rule 19b–4(f)(6)(iii) of the Act, a proposed rule change does not become operative for 30 days after the date of its filing, or such shorter time as the Commission may designate if consistent with the protection of investors and the public interest, provided that the self-regulatory

Continued

Nasdaq intends for this rule change to become operative on January 31, 2006.

At any time within 60 days of the filing of the proposed rule change, the Commission may summarily abrogate such rule change if it appears to the Commission that such action is necessary or appropriate in the public interest, for the protection of investors, or otherwise in furtherance of the purposes of the Act.

## IV. Solicitation of Comments

Interested persons are invited to submit written data, views, and arguments concerning the foregoing, including whether the proposed rule change, as amended, is consistent with the Act. Comments may be submitted by any of the following methods:

*Electronic Comments*

- Use the Commission's Internet comment form (*http://www.sec.gov/rules/sro.shtml*); or
- Send an e-mail to *rule-comments@sec.gov.* Please include File Number SR–NASD–2005–150 on the subject line.

*Paper Comments*

- Send paper comments in triplicate to Jonathan G. Katz, Secretary, Securities and Exchange Commission, Station Place, 100 F Street, NE., Washington, DC 20549–9303.

All submissions should refer to File Number SR–NASD–2005–150. This file number should be included on the subject line if e-mail is used. To help the Commission process and review your comments more efficiently, please use only one method. The Commission will post all comments on the Commission's Internet Web site (*http://www.sec.gov/rules/sro.shtml*). Copies of the submission, all subsequent amendments, all written statements with respect to the proposed rule change that are filed with the Commission, and all written communications relating to the proposed rule change between the Commission and any person, other than those that may be withheld from the public in accordance with the provisions of 5 U.S.C. 552, will be available for inspection and copying in the Commission's Public Reference Room. Copies of such filing also will be available for inspection and copying at the principal office of the NASD. All comments received will be posted without change; the Commission does not edit personal identifying information from submissions. You should submit only information that you wish to make available publicly.

All submissions should refer to File Number SR–NASD–2005–150 and should be submitted on or before January 19, 2006.

For the Commission, by the Division of Market Regulation, pursuant to delegated authority.[13]

**Jonathan G. Katz,**

*Secretary.*

[FR Doc. E5–8069 Filed 12–28–05; 8:45 am]

**BILLING CODE 8010–01–P**

organization has given the Commission written notice of its intent to file the proposed rule change, along with a brief description and text of the proposed rule change, at least five business days prior to the date of filing of the proposed rule change, or such shorter time as designated by the Commission. Nasdaq complied with the five day pre-filing requirement.

[13] 17 CFR 200.30–3(a)(12).

---

## SECURITIES AND EXCHANGE COMMISSION

**[Release No. 34–53014; File No. SR–NYSE–2005–89]**

## Self-Regulatory Organizations; New York Stock Exchange, Inc.; Notice of Filing and Immediate Effectiveness of Proposed Rule Change To Extend the Pilot for NYSE Direct+® Until December 23, 2006

December 22, 2005.

Pursuant to Section 19(b)(1) of the Securities Exchange Act of 1934 (''Act'')[1] and Rule 19b–4 thereunder,[2] notice is hereby given that on December 13, 2005, the New York Stock Exchange, Inc. (''NYSE'' or ''Exchange'') filed with the Securities and Exchange Commission (''Commission'') the proposed rule change as described in Items I and II below, which Items have been prepared by NYSE. The Commission is publishing this notice to solicit comments on the proposed rule change from interested persons.

### I. Self-Regulatory Organization's Statement of the Terms of Substance of the Proposed Rule Change

This proposal is to extend until December 23, 2006, the effectiveness of the pilot (the ''Pilot'') for NYSE Direct+® (''Direct +''). The Pilot was approved initially on a one-year basis and extended for several additional years, and now expires on December 23, 2005.

### II. Self-Regulatory Organization's Statement of the Purpose of, and Statutory Basis for, the Proposed Rule Change

In its filing with the Commission, the Exchange included statements concerning the purpose of and basis for the proposed rule change and discussed any comments it received on the proposed rule change. The text of these statements may be examined at the places specified in Item IV below. The Exchange has prepared summaries, set forth in Sections A, B, and C below, of the most significant aspects of such statements.

*A. Self-Regulatory Organization's Statement of the Purpose of, and Statutory Basis for, the Proposed Rule Change*

1. Purpose

In light of the fact that the Commission is still considering the Exchange's filing on proposed enhancements to NYSE Direct+® (the NYSE HYBRID MARKETS SM—''Hybrid Market'') as described in SR–NYSE–2004–05 and subsequent amendments thereto[3], the Exchange hereby is filing to renew its Pilot, as it currently operates, for an additional year.

Background

NYSE Direct+® was originally approved as a one-year pilot in SR–NYSE–2000–18,[4] ending on December 21, 2001. The Exchange then extended the Pilot for an additional one-year, ending December 23, 2002.[5] The Pilot was subsequently extended for an additional one-year, ending December 23, 2003.[6] It was again extended for two additional one-year periods and now expires on December 23, 2005.[7]

The NYSE Direct+® pilot provides for the automatic execution of limit orders of 1,099 shares or less (''auto ex'' orders) against trading interest reflected in the Exchange's published quotation. It is

[1] 15 U.S.C. 78s(b)(1).

[2] 17 CFR 240.19b–4.

[3] *See* Securities Exchange Act Release No. 50173 (August 10, 2004), 69 FR 50407 (August 16, 2004) (Amendment No. 1 to SR–NYSE–2004–05); Securities Exchange Act Release No. 50667 (November 15, 2004), 69 FR 67980 (November 22, 2004) (Amendment Nos. 2 and 3 to SR–NYSE–2004–05); (The Exchange withdrew Amendment No. 4 and replaced it with Amendment No. 5); Securities Exchange Act Release No. 51906 (June 22, 2005), 70 FR 37463 (June 29, 2005) (Amendment No. 5 to SR–NYSE–2004–05). *See also* Amendment No. 6 to SR–NYSE–2004–05 (September 16, 2005) and Amendment No. 7 to SR–NYSE–2004–05 (October 11, 2005).

[4] *See* Securities Exchange Act Release No. 43767 (December 22, 2000), 66 FR 834 (January 4, 2001) (SR–NYSE–2000–18).

[5] *See* Securities Exchange Act Release No. 45331 (January 24, 2002), 67 FR 5024 (February 1, 2002) (SR–NYSE–2001–50).

[6] *See* Securities Exchange Act Release No. 46906 (November 25, 2002), 67 FR 72260 (December 4, 2002) (SR–NYSE–2002–47).

[7] *See* Securities Exchange Act Release No. 48772 (November 12, 2003), 68 FR 65756 (November 21, 2003) (SR–NYSE–2003–30). *See* Securities Exchange Act Release No. 50828 (December 9, 2004), 69 FR 75579 (December 17, 2004) (SR–NYSE–2004–66).

not mandatory that all limit orders of 1,099 shares be entered as auto ex orders; rather, the member organization entering the order, or its customer if enabled by the member organization, can choose to enter an auto ex order when such member organization (or customer) believes that the speed and certainty of an execution at the Exchange's published bid or offer price is in its customer's best interest.

The Exchange proposes to extend this Pilot for an additional year (from December 24, 2005 until December 23, 2006). Five filings which impact NYSE Direct+® have been filed with or approved by the Commission during the current Pilot are now part of the Pilot.[8] These include:

(a) A filing which amended Rule 1000 to provide that NYSE Direct+® executions will not be available if the resulting trade would be more than five cents away from the last sale.[9] The amendment also provided that during the process for completing Rule 127 transactions, the specialist should publish a bid and/or offer that is more than five cents away from the last reported transaction price in the subject security on the Exchange.

(b) A filing which amended Exchange Rules 13 and 1005 in order to eliminate size and frequency restrictions for orders entered through NYSE Direct+® (''Direct +'') in Investment Company Units, as defined in paragraph 703.16 of the Listed Company Manual, Trust Issued Receipts (such as HOLDRs), as defined in Rule 1200, and streetTRACKS® Gold Shares, as defined in Rule 1300, (collectively ''ETFs'').[10]

(c) A filing which amended Rule 1002 to include ETFs and HOLDRs and provide that ETFs trade until 4:15 p.m. and amended Rule 1005 to reflect that the rule applies to ETFs and HOLDRs.[11]

(d) A filing which amended Rule 1005 to permit entry of limit orders up to 1,099 shares within 30 seconds for an account in which the same person has an interest, provided that the orders are entered from different terminals and that the member or member organization responsible for the entry of the orders to the trading floor (''Floor'') has procedures to monitor compliance with the separate terminal requirement.[12]

(e) A filing which amended Rules 1000 and 1001 in connection with the NYSE LiquidityQuote℠ initiative.[13] In conjunction with autoquoting of bids and offers, Rule 1000 has been amended to provide that a NYSE Direct+® order equal to or greater than the size of the published bid/offer exhausts the entire bid/offer, rather than decreases it to 100 shares.[14] Rule 1001(c) provided that if executions of auto ex orders have traded with all trading interest reflected in the Exchange's published bid or offer, the Exchange will disseminate a bid or offer at that price of 100 shares until the specialist requotes that market. Rule 1001(c) has been deleted.

The above-mentioned filings became part of the NYSE Direct+® rules and were incorporated into the Pilot upon their respective filing or approval by the Commission.[15] Therefore, they are extended as part of the Pilot.

If, however, the Commission approves the Hybrid Market proposal during the extension of the Pilot period (December 24, 2005–December 23, 2006), the Hybrid Market proposal would supersede this filing.

2. Statutory Basis

The Exchange believes that the proposed rule change is consistent with Section 6(b) of the Act[16] in general, and furthers the objectives of Section 6(b)(5) of the Act[17] in particular, because it is designed to promote just and equitable principles of trade, to remove impediments to and perfect the mechanism of a free and open market and a national market system and, in general, to protect investors and the public interest. The Exchange also believes that the proposed rule change is designed to support the principles of Section 11A(a)(1) of the Act[18] in that it seeks to assure economically efficient execution of securities transactions, makes it practicable for brokers to execute investors' orders in the best market and provides an opportunity for investors' orders to be executed without the participation of a dealer.

*B. Self-Regulatory Organization's Statement on Burden on Competition*

The Exchange does not believe that the proposed rule change will impose any burden on competition that is not necessary or appropriate in furtherance of the purposes of the Act.

*C. Self-Regulatory Organization's Statement on Comments on the Proposed Rule Change Received From Members, Participants or Others*

The Exchange has neither solicited nor received written comments on the proposed rule change.

**III. Date of Effectiveness of the Proposed Rule Change and Timing for Commission Action**

Because the foregoing proposed rule does not (i) significantly affect the protection of investors or the public interest; (ii) impose any significant burden on competition; and (iii) become operative for 30 days from the date on which it was filed, or such shorter time as the Commission may designate if consistent with the protection of investors and the public interest, provided that the self-regulatory organization has given the Commission written notice of its intent to file the proposed rule change at least five business days prior to the date of filing of the proposed rule change or such shorter time as designated by the Commission, the proposed rule change has become effective pursuant to Section 19(b)(3)(A) of the Act[19] and Rule 19b–4(f)(6) thereunder.[20] At any time within 60 days of the filing of such proposed rule change, the Commission may summarily abrogate such rule change if it appears to the Commission that such action is necessary or appropriate in the public interest, for the protection of investors, or otherwise in furtherance of the purposes of the Act.[21]

The Exchange requests that the Commission waive the five business days pre-filing requirement and the 30-day operative delay under Rule 19b–4(f)(6)(iii).[22] The Exchange believes that the continuation of the Pilot is in the public interest as it will avoid

[8] *See* telephone conversation between Steve L. Kuan, Special Counsel, Division of Market Regulation (''Divison''), Commission, and Jeffrey Rosenstrock, Principal Rule Counsel, NYSE, on December 21, 2005. In addition, SR–NYSE–2003–20 proposed to disengage NYSE Direct+® in five-actively traded stocks. However, this pilot expired on June 20, 2003 and therefore, does not impact the Pilot as proposed to be extended. *See* Securities Exchange Act Release No. 47965 (June 2, 2003), 68 FR 34691 (June 10, 2003) (SR–NYSE–2003–20).

[9] *See* Securities Exchange Act Release No. 47463 (March 7, 2003), 68 FR 12122 (March 13, 2003) (SR–NYSE–2002–44).

[10] *See* Securities Exchange Act Release No. 52160 (July 28, 2005), 70 FR 44963 (August 4, 2005) (SR–NYSE–2005–49).

[11] *See* Securities Exchange Act Release No. 47024 (December 18, 2002), 67 FR 79217 (December 27, 2002) (SR–NYSE–2002–37). The expansion of the Direct+ order size eligibility described in this filing (for up to 10,000 shares) was superseded by SR–NYSE–2005–49.

[12] *See* Securities Exchange Act Release No. 47353 (February 12, 2003), 68 FR 8318 (February 20, 2003) (SR–NYSE–2002–58).

[13] *See* Securities Exchange Act Release No. 47614 (April 2, 2003), 68 FR 17140 (April 8, 2003) (SR–NYSE–2002–55).

[14] *See* telephone conversation between Steve L. Kuan, Special Counsel, Division, Commission, and Jeffrey Rosenstrock, Principal Rule Counsel, NYSE, on December 21, 2005.

[15] *See id.*

[16] 15 U.S.C. 78f(b).

[17] 15 U.S.C. 78f(b)(5).

[18] 15 U.S.C. 78k–1(a)(1).

[19] 15 U.S.C. 78s(b)(3)(A).

[20] 17 CFR 240.19b–4(f)(6).

[21] 15 U.S.C. 78s(b)(3)(C).

[22] 17 CFR 240.19b–4(f)(6)(iii).

inconvenience and interruption to the public.

The Commission believes that waiver of the 30 day operative delay is consistent with the protection of investors and the public interest,[23] because it will allow the Exchange to continue, without interruption, the existing operation of the Pilot for an additional year, while the Commission considers the Hybrid Market. Accordingly, the Commission designates that the proposal shall become operative as of the date of this notice.

## IV. Solicitation of Comments

Interested persons are invited to submit written data, views and arguments concerning the foregoing, including whether the proposed rule change is consistent with the Act. Comments may be submitted by any of the following methods:

*Electronic Comments*

- Use the Commission's Internet comment form (*http://www.sec.gov/rules/sro.shtml*); or
- Send an e-mail to *rule-comments@sec.gov.* Please include File Number SR–NYSE–2005–89 on the subject line.

*Paper Comments*

- Send paper comments in triplicate to Jonathan G. Katz, Secretary, Securities and Exchange Commission, 100 F Street, NE., Washington, DC 20549–9303.

All submissions should refer to File Number SR–NYSE–2005–89. This file number should be included on the subject line if e-mail is used. To help the Commission process and review your comments more efficiently, please use only one method. The Commission will post all comments on the Commission's Internet Web site (*http://www.sec.gov/rules/sro.shtml*). Copies of the submission, all subsequent amendments, all written statements with respect to the proposed rule change that are filed with the Commission, and all written communications relating to the proposed rule change between the Commission and any person, other than those that may be withheld from the public in accordance with the provisions of 5 U.S.C. 552, will be available for inspection and copying in the Commission's Public Reference Room. Copies of such filing also will be available for inspection and copying at the principal office of the Exchange. All comments received will be posted without change; the Commission does not edit personal identifying information from submissions. You should submit only information that you wish to make available publicly. All submissions should refer to File Number SR–NYSE–2005–89 and should be submitted on or before January 19, 2006.

For the Commission, by the Division of Market Regulation, pursuant to delegated authority.[24]

**Jonathan G. Katz,**

*Secretary.*

[FR Doc. E5–8066 Filed 12–28–05; 8:45 am]

**BILLING CODE 8010–01–P**

[23] For purposes only of accelerating the operative date of this proposal, the Commission has considered the proposed rule's impact on efficiency, competition, and capital formation. 15 U.S.C. 78c(f).

[24] 17 CFR 200.30–3(a)(12).

---

## SECURITIES AND EXCHANGE COMMISSION

**[Release No. 34–53018; File No. SR–NYSE–2005–78]**

## Self-Regulatory Organizations; New York Stock Exchange, Inc.; Notice of Filing of Proposed Rule Change Relating to Amendments to New York Stock Exchange Rules 35 (''Floor Employees to be Registered'') and 301 (''Proposed Transfer or Lease of Membership'')

December 23, 2005.

Pursuant to Section 19(b)(1) of the Securities Exchange Act of 1934 (''Act'')[1] and Rule 19b–4[2] thereunder, notice is hereby given that on December 13, 2005, the New York Stock Exchange, Inc. (''NYSE'' or ''Exchange'') filed with the Securities and Exchange Commission (''SEC'' or ''Commission'') the proposed rule change as described in Items I, II and III below, which Items have been prepared by the Exchange. The Commission is publishing this notice to solicit comments on the proposed rule change from interested persons.

## I. Self-Regulatory Organization's Statement of the Terms of Substance of the Proposed Rule Change

The proposed change consists of amendments to NYSE Rules 35 (''Floor Employees to be Registered'') and 301 (''Proposed Transfer or Lease of Membership'') which would limit access to the Exchange Floor until fingerprint reports have been properly processed and approved and would require an alternative background check for persons whose fingerprints are deemed illegible. The text of the proposed rule change is available on NYSE's Web site (*http://www.nyse.com*), at NYSE's Office of the Secretary, and at the Commission's public reference room.

## II. Self-Regulatory Organization's Statement of the Purpose of, and Statutory Basis for, the Proposed Rule Change

In its filing with the Commission, NYSE included statements concerning the purpose of and basis for the proposed rule change and discussed any comments it received on the proposed rule change. The text of these statements may be examined at the places specified in Item IV below. NYSE has prepared summaries, set forth in sections A, B, and C below, of the most significant aspects of such statements.

*A. Self-Regulatory Organization's Statement of the Purpose of, and Statutory Basis for, the Proposed Rule Change*

1. Purpose

NYSE Rule 35 governs the issuance of Floor tickets (*e.g.*, Regular Tickets and Special Tickets) to Floor employees, which enables them to enter upon the trading Floor. NYSE Rule 35.70 requires the fingerprinting of prospective employees of members and member organizations. Similarly, NYSE Rule 301.23 requires that prospective members be fingerprinted.

Security concerns have suggested a tightening of these rules in two respects: (1) That access to the Floor be denied for persons fingerprinted for the first time until the fingerprinting results have properly been processed and accepted; and (2) that those persons whose fingerprints cannot be read (*i.e.*, are illegible) be subject to an alternative background check acceptable to the Exchange to cover the same criminal convictions included by fingerprint type. In order for a background check to be acceptable to the Exchange, it would, at a minimum, have to disclose the same arrest records which the fingerprint check would for all fifty states and, where the applicant is foreign, through the records of Interpol. Amendments are also proposed to reflect the fact that the Exchange no longer accepts fingerprint cards, but rather processes them through agents.[3]

[1] 15 U.S.C. 78s(b)(1).

[2] 17 CFR 240.19b–4.

[3] *See* NYSE Information Memo 04–53, dated October 8, 2004 (announcing that as of October 29, 2004, the Exchange would stop accepting new fingerprints from its members and member organizations and other persons and entities subject to a fingerprinting requirement under Section 17 of the Exchange Act, but noting that certain members unable to submit fingerprints through another SRO

Background

Rule 17f–2 [4] under the Exchange Act sets out the requirements for the fingerprinting of persons employed in the securities industry. The Exchange has adopted procedures to comply with the regulations in order to assure that appropriate persons are fingerprinted and the results of the fingerprinting are reviewed.[5]

Prior to providing member firm employees with Floor ticket access to the Trading Floor and Exchange facilities, and pursuant to NYSE Rules 35 and 345.11 (''Employees—Registration, Approval, Records''),[6] a member firm must electronically submit a Form U4 [7] via the Central Registration Depository system (''CRD'').[8] The hiring member firm and the employee are responsible for confirming the accuracy of the information included on the Form U4.[9]

Members and member organizations currently have up to 30 days from the date of the electronic filing of the Form U4 application in Web CRD for the fingerprints to be submitted. Applicants and member organizations sometimes wait until the end of the 30-day period to submit fingerprints, whereas results from the FBI can be reported within 24–48 hours. It is proposed that prospective new Floor employees not be admitted to the Floor until the results of the fingerprinting have been posted to the CRD, reviewed and approved. While the physical security of the Floor is the primary factor in the proposed changes, it is hoped that with this proposed requirement, member organizations will be encouraged to act more promptly.

An applicant who has been fingerprinted previously with a member or registered broker-dealer would be granted a conditional approval, pending review of the fingerprint results submitted by the current employer, assuming the prior employment was within ninety days of the application. Any such applicant would have been under a duty to disclose any reportable events during such employment to a supervising broker-dealer who was charged with a duty to report statutory disqualifications. In addition, the applicant would, of course, have a duty to disclose any reportable events during the intervening period in his or her application.

A separate issue is raised where applicants submit fingerprints, which cannot be read (*i.e.*, illegible fingerprints). Under Exchange Act Rule 17f–2(a)(l)(iv),[10] when fingerprints are rejected three times as ''illegible'' by the FBI, the individual is exempt from further fingerprinting.[11] Exchange Act Rule 17f–2 does not require an alternate means of conducting a background check. To address this background check lapse, the NYSE's proposed amendment goes beyond the requirements of the foregoing rule and requires that members and member organizations conduct an alternative background check acceptable to the Exchange. Any such background check, in order to be acceptable to the Exchange, would have to cover the same criminal convictions included by fingerprint type on a fifty state basis and, if the applicant is foreign, an Interpol or other multi-national database check. These checks are generally conducted by non-governmental agencies. Member organizations would be expected to use appropriate due diligence in the selection of investigative agencies for such background checks, assuring their ability to satisfactorily research all pertinent databases. As above, conditional approval would be available to persons previously the subject of a background check, provided employment with a member or registered broker-dealer terminated within ninety days of the applications.

The proposed revisions to NYSE Rules 35.70 and 301.23 will also reflect the fact that the Exchange no longer receives fingerprint cards directly, but does so through agents of the Exchange.[12] However, the Exchange's Membership Services Department will process the fingerprints of member applicants not associated with broker-dealers (not required to be registered on CRD).

2. Statutory Basis

NYSE believes that the proposed rule change is consistent with the requirements of the Exchange Act and the rules and regulations thereunder applicable to a national securities exchange, and in particular, with the requirements of Sections 6(b)(5) [13] which requires, among other things, that the rules of an exchange be designed to promote just and equitable principles of trade, to remove impediments to and perfect the mechanism of a free and open market and national market system, and in general, to protect investors and the public interest. NYSE believes that the proposed rule change, by strengthening the security of the Exchange Floor, will help assure the uninterrupted trading and maintenance of the market.

*B. Self-Regulatory Organization's Statement on Burden on Competition*

The Exchange believes that the proposal does not impose any burden on competition not necessary or appropriate in furtherance of the purposes of the Exchange Act.

*C. Self-Regulatory Organization's Statement on Comments on the Proposed Rule Change Received from Members, Participants or Others*

Comments were neither solicited nor received.

**III. Date of Effectiveness of the Proposed Rule Change and Timing for Commission Action**

Within 35 days of the date of publication of this notice in the **Federal Register** or within such longer period (i) as the Commission may designate up to 90 days of such date if it finds such longer period to be appropriate and publishes its reasons for so finding or (ii) as to which the self-regulatory organization consents, the Commission will:

(A) By order approve such proposed rule change, or

(B) Institute proceedings to determine whether the proposed rule change should be disapproved.

would still be able to receive Exchange fingerprint services). Upon the completion of the reorganization of the Exchange proposed for January of 2006, NYSE believes that there should no longer be members unable to utilize another SRO.

[4] 17 CFR 240.17f–2.

[5] *See* NYSE Information Memos 76–30 dated June 25, 1976 and 76–53, dated December 31, 1976, announcing, respectively, the adoption of Exchange Act Rule 17f–2 and SEC approval of the Exchange's plan for the processing of fingerprints. *See also* Securities Exchange Act Release No. 13105 (December 23, 1976), 42 FR 753 (January 4, 1977).

[6] NYSE Rule 345.11 requires, among other things, member firms to thoroughly investigate the previous record of persons whom they contemplate employing.

[7] Form U4 includes information such as an individual's ten-year employment history, five-year residential history, education, disciplinary actions, disclosure information, and the self-regulatory organization of registration.

[8] The CRD is a registration and licensing system for the U.S. securities industry, state and Federal regulators, and SROs. The NASD operates the CRD pursuant to policies developed jointly with the North American Securities Administrators Association, Inc.

[9] Through CRD the accuracy of the disclosure portion (*e.g.*, criminal disclosures, regulatory action disclosures) of Form U4 pursuant to prior submitted filings and fingerprinting is confirmed.

[10] 17 CFR 240.17f–2(a)(1)(iv).

[11] In this instance, CRD also conducts a ''name check.''

[12] NYSE Rule 345.18 provides that any filing or submission to be made with the Exchange under this rule, where appropriate, may be made with a properly authorized agent acting on behalf of the Exchange and shall be deemed to be a filing with the Exchange.

[13] 15 U.S.C. 78f(b)(5).

## IV. Solicitation of Comments

Interested persons are invited to submit written data, views, and arguments concerning the foregoing, including whether the proposed rule change is consistent with the Exchange Act. Comments may be submitted by any of the following methods:

*Electronic Comments*

- Use the Commission's Internet comment form (*http://www.sec.gov/rules/sro.shtml*); or
- Send an e-mail to *rule-comments@sec.gov.* Please include File Number SR–NYSE–2005–78 on the subject line.

*Paper Comments*

- Send paper comments in triplicate to Jonathan G. Katz, Secretary, Securities and Exchange Commission, 100 F Street, NE., Washington, DC 20549–9303.

All submissions should refer to File Number SR–NYSE–2005–78. This file number should be included on the subject line if e-mail is used. To help the Commission process and review your comments more efficiently, please use only one method. The Commission will post all comments on the Commission's Internet Web site (*http://www.sec.gov/rules/sro.shtml*). Copies of the submission, all subsequent amendments, all written statements with respect to the proposed rule change that are filed with the Commission, and all written communications relating to the proposed rule change between the Commission and any person, other than those that may be withheld from the public in accordance with the provisions of 5 U.S.C. 552, will be available for inspection and copying in the Commission's Public Reference Room. Copies of the filing also will be available for inspection and copying at the principal office of NYSE. All comments received will be posted without change; the Commission does not edit personal identifying information from submissions. You should submit only information that you wish to make available publicly. All submissions should refer to File Number SR–NYSE–2005–78 and should be submitted on or before January 19, 2006.

For the Commission, by the Division of Market Regulation, pursuant to delegated authority.[14]

**Jonathan G. Katz,**

*Secretary.*

[FR Doc. E5–8067 Filed 12–28–05; 8:45 am]

**BILLING CODE 8010–01–P**

---

## SECURITIES AND EXCHANGE COMMISSION

**[Release No. 34–52995; File No. SR–PCX–2005–140]**

## Self-Regulatory Organizations; Notice of Filing and Immediate Effectiveness of Proposed Rule Change and Amendment No. 1 Thereto by the Pacific Exchange, Inc. Relating to the NASD PCX Agreement

December 21, 2005.

Pursuant to Section 19(b)(1) of the Securities Exchange Act of 1934 (''Act'')[1] and Rule 19b–4 thereunder,[2] notice is hereby given that on December 21, 2005, the Pacific Exchange, Inc. (''PCX'' or ''Exchange'') filed with the Securities and Exchange Commission (''Commission'' or ''SEC'') the proposed rule change as described in Items I and II below, which Items have been prepared by PCX. On December 21, 2005, PCX filed Amendment No. 1 to the proposed rule change. PCX filed the proposed rule change pursuant to Section 19(b)(3)(A) of the Act[3] and Rule 19b–4(f)(6) thereunder,[4] which renders it effective upon filing with the Commission. The Commission is publishing this notice to solicit comments on the proposed rule change, as amended, from interested persons.

### I. Self-Regulatory Organization's Statement of the Terms of Substance of the Proposed Rule Change

PCX is proposing to amend its undertaking to extend for 90 days from the date of this filing the time period by which PCX will amend the agreement between the National Association of Securities Dealers (''NASD'') and PCX currently in place pursuant to Rule 17d–2 under the Act[5] (the ''NASD PCX Agreement''). As described in more detail below, the amendment to the NASD PCX Agreement will expand the scope of the NASD's regulatory responsibility.

[14] 14 17 CFR 200.30–3(a)(12).

[1] 15 U.S.C. 78s(b)(1).

[2] 17 CFR 240.19b–4.

[3] 15 U.S.C. 78s(b)(3)(A).

[4] 17 CFR 240.19b–4(f)(6).

[5] 17 CFR 240.17d–2.

### II. Self-Regulatory Organization's Statement of the Purpose of, and Statutory Basis for, the Proposed Rule Change

In its filing with the Commission, PCX included statements concerning the purpose of and basis for the proposed rule change and discussed any comments it received on the proposed rule change. The text of these statements may be examined at the places specified in Item IV below. PCX has prepared summaries, set forth in sections A, B and C below, of the most significant aspects of such statements.

*A. Self-Regulatory Organization's Statement of the Purpose of, and Statutory Basis for, the Proposed Rule Change*

1. Purpose

The Commission recently approved a proposed rule change in relation to the acquisition of PCX Holdings, Inc. by Archipelago Holdings, Inc. (''Archipelago Holdings'').[6] In its filing with the Commission, PCX committed to amend the NASD PCX Agreement within 90 days of the Commission's approval of SR–PCX–2005–90 to expand the scope of the NASD's regulatory functions under the NASD PCX Agreement so as to encompass all of the regulatory oversight and enforcement responsibilities with respect to the broker-dealer affiliate of Archipelago Holdings, Archipelago Securities, L.L.C. (''Archipelago Securities'').[7] The 90-day period expires on December 21, 2005, and while the PCX and NASD have executed an amended NASD PCX Agreement, the PCX and NASD have not yet filed the amended NASD PCX Agreement with the Commission.

The PCX believes that an extension of time for an additional 90 days from the date of this filing to amend the PCX NASD Agreement will give the Commission staff sufficient time to publish and take action on the proposal. There is currently a plan in place (*i.e.*, the NASD PCX Agreement) allocating to the NASD the responsibility to receive regulatory reports from Archipelago Securities, to examine Archipelago Securities for compliance and to enforce compliance by Archipelago Securities with the Act, the rules and regulations thereunder and the rules of the NASD, and to carry out other specified regulatory functions with respect to

[6] Securities Exchange Act Release No. 52497 (September 22, 2005); 70 FR 56949 (September 29, 2005) (approving SR–PCX–2005–90 as amended).

[7] Archipelago Securities acts as the outbound order router for the Archipelago Exchange and, as such, is regulated as an exchange ''facility'' of the PCX and PCXE.

Archipelago Securities. The Exchange notes that the current NASD PCX Agreement will remain in full force and effect during the interim period and PCX will continue to abide by the terms of the agreement. Furthermore, the PCX undertakes to file a proposed amendment to the NASD PCX Amendment with the Commission on or before January 4, 2006. The PCX believes the requested extension of time is consistent with the Act and the rules and regulations thereunder, and will neither significantly affect the protection of investors or the public interest nor impose any significant burden on competition.

2. Basis

For the reasons discussed above, the Exchange believes that the proposed rule change is consistent with the Act and the rules and regulations thereunder and, in particular, the requirements of Section 6(b) of the Act.[8] Specifically, the Exchange believes the proposed rule change is consistent with the Section 6(b)(5)[9] requirement that the rules of an exchange be designed to promote just and equitable principles of trade, to remove impediments to and perfect the mechanism for a free and open market and a national market system, and, in general to protect investors and the public interest.[10]

*B. Self-Regulatory Organization's Statement on Burden on Competition*

The Exchange does not believe that the proposed rule change, as amended, will impose any burden on competition that is not necessary or appropriate in furtherance of the purposes of the Act.

*C. Self-Regulatory Organization's Statement on Comments on the Proposed Rule Change Received from Members, Participants, or Others*

Written comments on the proposed rule change were neither solicited nor received.

## III. Date of Effectiveness of the Proposed Rule Change and Timing for Commission Action

Because the foregoing proposed rule change, as amended, does not:

(i) Significantly affect the protection of investors or the public interest;

(ii) impose any significant burden on competition; and

(iii) become operative for 30 days from the date on which it was filed, or such shorter time as the Commission may designate, it has become effective pursuant to Section 19(b)(3)(A) of the Act[11] and Rule 19b–4(f)(6) thereunder.[12] At any time within 60 days after the filing of the proposed rule change, the Commission may summarily abrogate the rule change if it appears to the Commission such action is necessary or appropriate in the public interest, for the protection of investors, or otherwise in furtherance of the purposes of the Act.

PCX has asked the Commission to waive the 30-day operative delay. The Commission believes that waiving the 30-day operative delay is consistent with the protection of investors and the public interest. Because the original 90-day time period expires on December 21, 2005, such waiver will allow the PCX to remain in compliance with its undertaking to amend the NASD PCX Agreement. The Commission notes that PCX represents that it has executed, but not yet filed with the Commission, an amended NASD PCX Agreement with the NASD, and that PCX has undertaken to file a proposed amendment to the NASD PCX Agreement on or before January 4, 2006. The Commission further notes that the NASD PCX Agreement currently in place will remain in full force and effect during the interim period and PCX will continue to abide by the terms of the agreement. For these reasons the Commission designates the proposal to be effective and operative upon filing with the Commission.[13]

## IV. Solicitation of Comments

Interested persons are invited to submit written data, views, and arguments concerning the foregoing, including whether the proposed rule change, as amended, is consistent with the Act. Comments may be submitted by any of the following methods:

*Electronic Comments*

- Use the Commission's Internet comment form (*http://www.sec.gov/rules/sro.shtml*); or
- Send an E-mail to *rule-comments@sec.gov*. Please include File Number SR–PCX–2005–140 on the subject line.

*Paper Comments*

- Send paper comments in triplicate to Jonathan G. Katz, Secretary, Securities and Exchange Commission, Station Place, 100 F Street, NE., Washington, DC 20549–9303.

All submissions should refer to File Number SR–PCX–2005–140. This file number should be included on the subject line if e-mail is used. To help the Commission process and review your comments more efficiently, please use only one method. The Commission will post all comments on the Commission's Internet Web site (*http://www.sec.gov/rules/sro.shtml*). Copies of the submission, all subsequent amendments, all written statements with respect to the proposed rule change that are filed with the Commission, and all written communications relating to the proposed rule change between the Commission and any person, other than those that may be withheld from the public in accordance with the provisions of 5 U.S.C. 552, will be available for inspection and copying in the Commission's Public Reference. Copies of such filing also will be available for inspection and copying at the principal office of the PCX. All comments received will be posted without change; the Commission does not edit personal identifying information from submissions. You should submit only information that you wish to make available publicly. All submissions should refer to File Number SR–PCX–2005–140 and should be submitted on or before January 19, 2006.

For the Commission, by the Division of Market Regulation, pursuant to delegated authority.[14]

**Jonathan G. Katz,**

*Secretary.*

[FR Doc. E5–8056 Filed 12–28–05; 8:45 am]

**BILLING CODE 8010–01–P**

[8] 15 U.S.C. 78f(b).

[9] 15 U.S.C. 78f(b)(5).

[10] *See* Amendment No. 1.

[11] 15 U.S.C. 78s(b)(3)(A).

[12] 17 CFR 240.19b–4(f)(6).

Pursuant to Rule 19b–4(f)(6)(iii) under the Act, the Exchange is required to give the Commission written notice of its intent to file the proposed rule change, along with a brief description and text of the proposed rule change, at least five business days prior to the date of filing of the proposed rule change, or such shorter time as designated by the Commission. The Commission has determined to waive this requirement. The Commission notes that the Exchange did provide notice of the filing two business days prior to the date of filing.

[13] For purposes only of waiving the 30-day operative delay, the Commission has considered the proposed rules impact on efficiency, competition, and capital formation. *See* 15 U.S.C. 78c(f).

[14] 17 CFR 200.30–3(a)(12).

## SECURITIES AND EXCHANGE COMMISSION

**[Release No. 34–53004; File No. SR–Phlx–2005–78]**

## Self-Regulatory Organizations; Philadelphia Stock Exchange, Inc.; Notice of Filing and Order Granting Accelerated Approval of Proposed Rule Change Relating to the Extension of a Pilot Concerning Priority in Trades Involving Synthetic Option Orders

December 22, 2005.

Pursuant to Section 19(b)(1) of the Securities Exchange Act of 1934 (''Act''),[1] and rule 19b–4 thereunder,[2] notice is hereby given that on December 13, 2005, the Philadelphia Stock Exchange, Inc. (''Phlx'' or ''Exchange'') filed with the Securities and Exchange Commission (''Commission'') the proposed rule change as described in Items I and II below, which Items have been prepared by Phlx. The Commission is publishing this notice to solicit comments on the proposed rule change from interested persons and is approving the proposed rule change on an accelerated basis, for a pilot period expiring on June 30, 2006.

### I. Self-Regulatory Organization's Statement of the Terms of Substance of the Proposed Rule Change

Phlx proposes to extend, for an additional six months, the pilot concerning Exchange rule 1033(e), which affords priority to synthetic option orders (as defined below) traded in open outcry over bids and offers in the trading crowd but not over bids (offers) of public customers on the limit order book and not over crowd participants who are willing to participate in the synthetic option order at the net debit or credit price. The proposed rule change would apply to orders for 100 contracts or more and would be subject to a pilot program scheduled to expire on June 30, 2006. The text of the proposed rule change is set forth below. Brackets indicate deletions; *italics* indicates new text.

* * * * *

*Bids and Offers—Premium*

Rule 1033. (a)–(d) No change.

(e) Synthetic Option Orders. When a member holding a synthetic option order, as defined in rule 1066, and bidding or offering on the basis of a total credit or debit for the order has determined that the order may not be executed by a combination of transactions at or within the bids and offers established in the marketplace, then the order may be executed as a synthetic option order at the total credit or debit with one other member, provided that, the member executes the option leg at a better price than the established bid or offer for that option contract, in accordance with rule 1014. Subject to a pilot expiring [December 31] *June 30*, 200[5] *6*, synthetic option orders in open outcry, in which the option component is for a size of 100 contracts or more, have priority over bids (offers) of crowd participants who are bidding (offering) only for the option component of the synthetic option order, but not over bids (offers) of public customers on the limit order book, and not over crowd participants that are willing to participate in the synthetic option order at the net debit or credit price.

(f)–(i) No change.

* * * * *

### II. Self-Regulatory Organization's Statement of the Purpose of, and Statutory Basis for, the Proposed Rule Change

In its filing with the Commission, Phlx included statements concerning the purpose of, and basis for, the proposed rule change and discussed any comments it received on the proposed rule change. The text of these statements may be examined at the places specified in Item III below. Phlx has prepared summaries, set forth in Sections A, B, and C below, of the most significant aspects of such statements.

*A. Self-Regulatory Organization's Statement of the Purpose of, and Statutory Basis for, the Proposed Rule Change*

1. Purpose

The purpose of the proposed rule change is to extend for a six-month period the pilot that facilitates the execution of an option order that is represented in the crowd together with a stock component, known under the Exchange rules as a synthetic option order,[3] which by virtue of the stock component may be difficult to execute without a limited exception to the Exchange priority rules. The current pilot is scheduled to expire on December 31, 2005.[4] Phlx proposes to extend the pilot to June 30, 2006.

The pilot provides that, if an Exchange member who is holding a synthetic option order and bidding or offering on a net debit or credit basis determines that such synthetic option order cannot be executed at the net debit or credit against the established bids and offers in the crowd, the member bidding for or offering the synthetic option on a net debit or credit basis may execute the synthetic option order with one other crowd participant, provided that the option portion of the synthetic option order is executed at a price that is better than the established bid or offer for the option. Thus, if the desired net debit or credit amount cannot be achieved by way of executing against the established bids and offers in the crowd, the member may elect to trade at the desired net debit or credit amount with one other member, provided that there is price improvement for the option component of the synthetic option order.

Exchange Rule 1033(e) affords synthetic option orders priority over bids (offers) of the trading crowd but not over bids (offers) of public customers on the limit order book and not over crowd participants that are willing to participate in the synthetic option order at the net debit or credit price. The effect of Exchange Rule 1033(e) is that a crowd participant bidding or offering for the synthetic option order has priority over other crowd participants that are bidding or offering only for the option component of the order. Exchange Rule 1033(e) applies only to synthetic option orders of 100 contracts or more.

In addition, Exchange Rule 1033(e) provides that members bidding and offering for synthetic option orders of 100 contracts or more do not have priority over bids (offers) of public customers on the limit order book.[5] Therefore, if members of the trading crowd wish to trade a synthetic option order that is marketable against public customer orders on the limit order book, public customers would have priority. Multiple public customer orders at the same price are accorded priority based on time.

[1] 15 U.S.C. 78s(b)(1).

[2] 17 CFR 240.19b–4.

[3] Exchange Rule 1066(g) defines a s synthetic option order as an order to buy or sell a stated number of option contracts and buy or sell the underlying stock or Exchange-Traded Fund Share in an amount that would offset (on a one-for-one basis) the option position. For example: (1) Buy-write: An example of a buy-write is an order to sell one call and buy 100 shares of the underlying stock or Exchange-Traded Fund Share. (2) Synthetic put: An example of a synthetic put is an order to buy one call and sell 100 shares of the underlying stock or Exchange-Traded Fund Share. (3) Synthetic call: An example of a synthetic call is an order to buy (or sell) one put and buy (or sell) 100 shares of the underlying stock or Exchange-Traded Fund Share.

[4] *See* Securities Exchange Act Release No. 52140 (July 27, 2005), 70 FR 45481 (August 5, 2005) (SR–Phlx–2005–31).

[5] *See* Exchange Rule 1080, Commentary .02.

The Exchange believes that the pilot, which provides a limited exception to the Exchange's priority rules only respecting controlled accounts [6] competing at the same price, should enable Floor Brokers representing synthetic option orders to provide best executions to customers placing such orders and should enable the Exchange to provide liquid markets and compete for order flow in such orders.

As stated above, the pilot applies only to synthetic option orders in which the option component is for a size of 100 contracts or more that are represented in the trading crowd in open outcry and would be subject to a pilot program through June 30, 2006.

2. Statutory Basis

The Exchange believes that its proposal is consistent with Section 6(b) of the Act [7] in general, and furthers the objectives of Section 6(b)(5) of the Act [8] in particular, in that it is designed to perfect the mechanisms of a free and open market and the national market system, protect investors and the public interest and promote just and equitable principles of trade, by adopting a limited exception to the Exchange's priority rules concerning synthetic option orders.

*B. Self-Regulatory Organization's Statement on Burden on Competition*

The Exchange does not believe that the proposed rule change would impose any burden on competition not necessary or appropriate in furtherance of the purposes of the Act.

*C. Self-Regulatory Organization's Statement on Comments on the Proposed Rule Change Received From Members, Participants, or Others*

No written comments were either solicited or received.

## III. Solicitation of Comments

Interested persons are invited to submit written data, views, and arguments concerning the foregoing, including whether the proposed rule change is consistent with the Act. Comments may be submitted by any of the following methods:

*Electronic Comments*

- Use the Commission's Internet comment form (*http://www.sec.gov/rules/sro.shtml*); or
- Send an e-mail to *rule-comments@sec.gov.* Please include File Number SR–Phlx–2005–78 in the subject line.

*Paper Comments*

- Send paper comments in triplicate to Jonathan G. Katz, Secretary, Securities and Exchange Commission, Station Place, 100 F Street, NE., Washington, DC 20549–9303.

All submissions should refer to File Number SR–Phlx–2005–78. This file number should be included on the subject line if e-mail is used. To help the Commission process and review your comments more efficiently, please use only one method. The Commission will post all comments on the Commission's Internet Web site (*http://www.sec.gov/rules/sro.shtml*). Copies of the submission, all subsequent amendments, all written statements with respect to the proposed rule change that are filed with the Commission, and all written communications relating to the proposed rule change between the Commission and any person, other than those that may be withheld from the public in accordance with the provisions of 5 U.S.C. 552, will be available for inspection and copying in the Commission's Public Reference Room. Copies of the filing also will be available for inspection and copying at the principal office of Phlx.

All comments received will be posted without change; the Commission does not edit personal identifying information from submissions. You should submit only information that you wish to make available publicly. All submissions should refer to File Number SR–Phlx–2005–78 and should be submitted on or before January 19, 2006.

## IV. Commission's Findings and Order Granting Accelerated Approval of Proposed Rule Change

After careful consideration, the Commission finds that the proposed rule change is consistent with the requirements of the Act and the rules and regulations thereunder applicable to a national securities exchange,[9] and, in particular, with the requirements of Section 6(b) of the Act [10] and the rules and regulations thereunder. The Commission finds that the proposed rule change is consistent with Section 6(b)(5) of the Act,[11] which requires, among other things, that the rules of an exchange be designed to promote just and equitable principles of trade, to remove impediments to and perfect the mechanism of a free and open market, and to protect investors and the public interest. The Commission notes that the priority rules with respect to the execution of synthetic option orders on other options exchanges are similar to Exchange Rule 1033(e).[12] In general, such rules serve to reduce the risk of incomplete or inadequate executions of synthetic option orders by allowing the synthetic option orders to have priority over bids and offers of crowd participants who are bidding or offering only for the option component of the synthetic option order but only subject to restrictions such as those proposed by Phlx. For example, the pilot would continue to protect the priority of public customer orders on the limit order book. In addition, the pilot protects the priority of crowd participants who are willing to participate in the synthetic option order at the net debit or credit price.

The Commission finds good cause, pursuant to Section 19(b)(2) of the Act,[13] for approving the proposed rule change prior to the thirtieth day after the date of publication of the notice of the filing thereof in the **Federal Register**. The Commission believes that granting accelerated approval would preserve the pilot for synthetic option orders without interruption.

## V. Conclusion

*It is therefore ordered,* pursuant to Section 19(b)(2) of the Act [14] that the proposed rule change (SR–Phlx–2005–78) is hereby approved on an accelerated basis for a pilot period to expire on June 30, 2006.

For the Commission, by the Division of Market Regulation, pursuant to delegated authority.[15]

**Jonathan G. Katz,**

*Secretary.*

[FR Doc. E5–8070 Filed 12–28–05; 8:45 am]

BILLING CODE 8010–01–P

[6] A controlled account includes any account controlled by or under common control with a broker-dealer. Customer accounts are all other accounts. Orders of controlled accounts are required to yield priority to customer orders when competing at the same price. Orders of controlled accounts generally are not required to yield priority to other controlled account orders. *See* Exchange Rule 1014(g)(i)(A).

[7] 15 U.S.C. 78f(b).

[8] 15 U.S.C. 78f(b)(5).

[9] In approving this rule, the Commission notes that it has considered its impact on efficiency, competition, and capital formation. 15 U.S.C. 78c(f).

[10] 15 U.S.C. 78f(b).

[11] 15 U.S.C. 78f(b)(5).

[12] *See, e.g.,* Securities Exchange Act Release Nos. 20294 (October 17, 1983), 48 FR 49114 (October 24, 1983) (approving SR–CBOE–83–4); 47959 (May 30, 2003), 68 FR 34441 (June 9, 2003) (approving SR–CBOE–2002–05); 44955 (October 18, 2001), 66 FR 53819 (October 24, 2001) (approving SR–ISE–2001–18); and 46646 (October 11, 2002), 67 FR 64428 (October 18, 2002) (approving SR–ISE–2002–20).

[13] 15 U.S.C. 78s(b)(2).

[14] 15 U.S.C. 78s(b)(2).

[15] 17 CFR 200.30–3(a)(12).

## SMALL BUSINESS ADMINISTRATION

### Reporting and Recordkeeping Requirements Under OMB Review

**AGENCY:** Small Business Administration.

**ACTION:** Notice of Reporting Requirements Submitted for OMB Review.

**SUMMARY:** Under the provisions of the Paperwork Reduction Act (44 U.S.C. Chapter 35), agencies are required to submit proposed reporting and recordkeeping requirements to OMB for review and approval, and to publish a notice in the **Federal Register** notifying the public that the agency has made such a submission.

**DATES:** Submit comments on or before January 30, 2006. If you intend to comment but cannot prepare comments promptly, please advise the OMB Reviewer and the Agency Clearance Officer before the deadline.

*Copies:* Request for clearance (OMB 83–1), supporting statement, and other documents submitted to OMB for review may be obtained from the Agency Clearance Officer.

**ADDRESSES:** Address all comments concerning this notice to: Agency Clearance Officer, Jacqueline White, Small Business Administration, 409 3rd Street, SW., 5th Floor, Washington, DC 20416; and *David_Rostker@omb.eop.gov*, fax number 202–395–7285 Office of Information and Regulatory Affairs, Office of Management and Budget.

**FOR FURTHER INFORMATION CONTACT:** Jacqueline White, Agency Clearance Officer, jacqueline.white@sba.gov (202) 205–7044.

**SUPPLEMENTARY INFORMATION:**

*Title:* U.S. Small Business Administration Loan Pool or Guranteed Interest Certification.

*Form No:* 1088.

*Frequency:* On Occasion.

*Description of Respondents:* Secondary Market Participants.

*Annual Responses:* 1,500.

*Annual Burden:* 9,750.

**Jacqueline K. White,**

*Chief, Administrative Information Branch.*

[FR Doc. E5–7997 Filed 12–28–05; 8:45 am]

BILLING CODE 8025–01–P

## SMALL BUSINESS ADMINISTRATION

### Reporting and Recordkeeping Requirements Under OMB Review

**AGENCY:** Small Business Administration.

**ACTION:** Notice of reporting requirements submitted for OMB review.

**SUMMARY:** Under the provisions of the Paperwork Reduction Act (44 U.S.C. Chapter 35), agencies are required to submit proposed reporting and recordkeeping requirements to OMB for review and approval, and to publish a notice in the **Federal Register** notifying the public that the agency has made such a submission.

**DATES:** Submit comments on or before January 30, 2006. If you intend to comment but cannot prepare comments promptly, please advise the OMB Reviewer and the Agency Clearance Officer before the deadline.

*Copies:* Request for clearance (OMB 83–1), supporting statement, and other documents submitted to OMB for review may be obtained from the Agency Clearance Officer.

**ADDRESSES:** Address all comments concerning this notice to: Agency Clearance Officer, Jacqueline White, Small Business Administration, 409 3rd Street, SW., 5th Floor, Washington, DC 20416; and *David_Rostker@omb.eop.gov*, fax number 202–395–7285 Office of Information and Regulatory Affairs, Office of Management and Budget.

**FOR FURTHER INFORMATION CONTACT:** Jacqueline White, Agency Clearance Officer, *jacqueline.white@sba.gov* (202) 205–7044.

**SUPPLEMENTARY INFORMATION:**

*Title:* Nomination for the Small Business Prime Contractor Nomination of the Small Business Subcontractor of the Year Award.

*Form No:* 883 & 1375.

*Frequency:* On Occasion.

*Description of Respondents:* Prime Contractor, Subcontractor.

*Annual Responses:* 161.

*Annual Burden:* 402.

**Jacqueline K. White,**

*Chief, Administrative Information Branch.*

[FR Doc. E5–8000 Filed 12–28–05; 8:45 am]

BILLING CODE 8025–01–P

## SMALL BUSINESS ADMINISTRATION

**[Disaster Declaration #10298]**

### Alaska Disaster #AK–00003

**AGENCY:** Small Business Administration.

**ACTION:** Notice.

**SUMMARY:** This is a Notice of the Presidential declaration of a major disaster for Public Assistance Only for the State of Alaska (FEMA–1618–DR), dated 12/09/2005.

*Incident:* Severe Fall Storm, Tidal Surges, and Flooding.

*Incident Period:* 09/22/2005 through 09/26/2005.

*Effective Date:* 12/09/2005.

*Physical Loan Application Deadline Date:* 02/07/2006.

**ADDRESSES:** Submit completed loan applications to: Small Business Administration, National Processing And Disbursement Center, 14925 Kingsport Road, Fort Worth, TX 76155.

**FOR FURTHER INFORMATION CONTACT:** A. Escobar, Office of Disaster Assistance, U.S. Small Business Administration, 409 3rd Street, SW., Suite 6050, Washington, DC 20416.

**SUPPLEMENTARY INFORMATION:** Notice is hereby given that as a result of the President's major disaster declaration on 12/09/2005, applications for Private Non-Profit organizations that provide essential services of a governmental nature may file disaster loan applications at the address listed above or other locally announced locations.

The following areas have been determined to be adversely affected by the disaster:

Northwest Arctic Borough
Bering Strait Regional Education Attendance Area
Kashunamiut Regional Education Attendance Area
Lower Kuskokwim Regional Education Attendance Area

The Interest Rates are:

| | Percent |
|---|---|
| Other (Including Non-Profit Organizations) With Credit Available Elsewhere | 4.750 |
| Businesses And Non-Profit Organizations Without Credit Available Elsewhere | 4.000 |

The number assigned to this disaster for physical damage is 10298.

(Catalog of Federal Domestic Assistance Number 59008)

**Herbert L. Mitchell,**

*Associate Administrator for Disaster Assistance.*

[FR Doc. E5–7999 Filed 12–28–05; 8:45 am]

BILLING CODE 8025–01–P

## SMALL BUSINESS ADMINISTRATION

**[Disaster Declaration #10299 and #10300]**

### Connecticut Disaster #CT–00002

**AGENCY:** Small Business Administration.

**ACTION:** Notice.

**SUMMARY:** This is a notice of an Administrative declaration of a disaster for the State of Connecticut dated December 21, 2005.

Incident: Severe Flooding.

Incident Period: 10/14/2005 through 10/15/2005.

**DATES:** *Effective Date:* 12/21/2005.

Physical Loan Application Deadline Date: 02/21/2006.

Economic Injury (Eidl) Loan Application Deadline Date: 09/21/2006.

**ADDRESSES:** Submit completed loan applications to: Small Business Administration, National Processing And Disbursement Center, 14925 Kingsport Road, Fort Worth, TX 76155.

**FOR FURTHER INFORMATION CONTACT:** A. Escobar, Office of Disaster Assistance, U.S. Small Business Administration, 409 3rd Street, SW., Suite 6050, Washington, DC 20416.

**SUPPLEMENTARY INFORMATION:** Notice is hereby given that as a result of the Administrator's disaster declaration applications for disaster loans may be filed at the address listed above or other locally announced locations.

The following areas have been determined to be adversely affected by the disaster:

Primary Counties:

Hartford, Litchfield, Tolland

Contiguous Counties: Connecticut

Fairfield, Middlesex, New Haven, New London, Windham

Massachusetts

Berkshire, Hampden, Worcester

New York

Dutchess

The Interest Rates are:

| | Percent |
|---|---|
| Homeowners With Credit Available Elsewhere | 5.375 |
| Homeowners Without Credit Available Elsewhere | 2.687 |
| Businesses With Credit Available Elsewhere | 6.557 |
| Businesses & Small Agricultural Cooperatives Without Credit Available Elsewhere | 4.000 |
| Other (Including Non-Profit Organizations) With Credit Available Elsewhere | 4.750 |
| Businesses And Non-Profit Organizations Without Credit Available Elsewhere | 4.000 |

The number assigned to this disaster for physical damage is 10299 6 and for economic injury is 10300 0.

The States which received an EIDL Declaration # are Connecticut, Massachusetts, New York.

(Catalog of Federal Domestic Assistance Numbers 59002 and 59008)

Dated: December 21, 2005.

**Hector V. Barreto,**

*Administrator.*

[FR Doc. E5–7998 Filed 12–28–05; 8:45 am]

BILLING CODE 8025–01–P

## SMALL BUSINESS ADMINISTRATION

### Interest Rates

The Small Business Administration publishes an interest rate called the optional ''peg'' rate (13 CFR 120.214) on a quarterly basis. This rate is a weighted average cost of money to the government for maturities similar to the average SBA direct loan. This rate may be used as a base rate for guaranteed fluctuating interest rate SBA loans. This rate will be 4.625 (4⅝) percent for the January–March quarter of FY 2006.

**Luz A. Hopewell,**

*Deputy Associate Administrator for Financial Assistance.*

[FR Doc. E5–8011 Filed 12–28–05; 8:45 am]

BILLING CODE 8025–01–P

## OFFICE OF THE UNITED STATES TRADE REPRESENTATIVE

### Generalized System of Preferences (GSP): Initiation of a Review To Consider the Designation of Liberia as a Least Developed Beneficiary Developing Country Under the GSP

**AGENCY:** Office of the United States Trade Representative.

**ACTION:** Notice and solicitation of public comment.

**SUMMARY:** This notice announces the initiation of a review to consider the designation of Liberia as a least developed beneficiary developing country under the GSP program and solicits public comment relating to the designation criteria. Comments are due January 13, 2006, in accordance with the requirements for submissions, explained below.

**ADDRESSES:** Submit comments by electronic mail (e-mail) to: *FR0441@ustr.gov*. For assistance or if unable to submit comments by e-mail, contact the GSP Subcommittee, Office of the United States Trade Representative; USTR Annex, Room F–220; 1724 F Street, NW., Washington, DC 20508 (Tel. 202–395–6971).

**FOR FURTHER INFORMATION CONTACT:** Contact the GSP Subcommittee, Office of the United States Trade Representative; USTR Annex, Room F–220; 1724 F Street, NW., Washington, DC 20508 (Telephone: 202–395–6971, Facsimile: 202–395–9481).

**SUPPLEMENTARY INFORMATION:** Liberia's GSP eligibility was suspended, effective May 1, 1990, because, following a review and recommendation by the Trade Policy Staff Committee in 1989, it was determined that it had not taken and was not taking steps to afford internationally recognized worker rights to workers in Liberia. The review was initiated in response to a petition filed by the Lawyers Committee for Human Rights in 1988. The GSP Subcommittee of the Trade Policy Staff Committee (TPSC) has initiated a review in order to make a recommendation to the President as to whether Liberia meets the eligibility criteria of the GSP statute, as set out below. After considering the eligibility criteria, the President is authorized to designate Liberia as a least developed beneficiary developing country for purposes of the GSP.

Interested parties are invited to submit comments regarding the eligibility of Liberia for designation as a least developed beneficiary developing country. Documents should be submitted in accordance with the below instructions to be considered in this review.

**Eligibility Criteria**

The trade benefits of the GSP program are available to any country that the President designates as a GSP ''beneficiary developing country.'' Additional trade benefits under the GSP are available to any country that the President designates as a GSP ''least-developed beneficiary developing country.'' In designating countries as GSP beneficiary developing countries, the President must consider the criteria in sections 502(b)(2) and 502(c) of the Trade Act of 1974, as amended (19 U.S.C. 2462(b)(2), 2462(c)) (''the Act''). Section 502(b)(2) provides that a country is ineligible for designation if:

1. Such country is a Communist country, unless—

(a) The products of such country receive nondiscriminatory treatment, (b) Such country is a WTO Member (as such term is defined in section 2(10) of the Uruguay Round Agreements Act) (19 U.S.C. 3501(10)) and a member of the International Monetary Fund, and (c) Such country is not dominated or controlled by international communism.

2. Such country is a party to an arrangement of countries and participates in any action pursuant to such arrangement, the effect of which is—

(a) To withhold supplies of vital commodity resources from international trade or to raise the price of such commodities to an unreasonable level, and (b) To cause serious disruption of the world economy.

3. Such country affords preferential treatment to the products of a developed country, other than the United States, which has, or is likely to have, a

significant adverse effect on United States commerce.

4. Such country—

(a) Has nationalized, expropriated, or otherwise seized ownership or control of property, including patents, trademarks, or copyrights, owned by a United States citizen or by a corporation, partnership, or association which is 50 percent or more beneficially owned by United States citizens, (b) Has taken steps to repudiate or nullify an existing contract or agreement with a United States citizen or a corporation, partnership, or association which is 50 percent or more beneficially owned by United States citizens, the effect of which is to nationalize, expropriate, or otherwise seize ownership or control of property, including patents, trademarks, or copyrights, so owned, or (c) Has imposed or enforced taxes or other exactions, restrictive maintenance or operational conditions, or other measures with respect to property, including patents, trademarks, or copyrights, so owned, the effect of which is to nationalize, expropriate, or otherwise seize ownership or control of such property, unless the President determines that—

(i) Prompt, adequate, and effective compensation has been or is being made to the citizen, corporation, partnership, or association referred to above, (ii) Good faith negotiations to provide prompt, adequate, and effective compensation under the applicable provisions of international law are in progress, or the country is otherwise taking steps to discharge its obligations under international law with respect to such citizen, corporation, partnership, or association, or (iii) A dispute involving such citizen, corporation, partnership, or association over compensation for such a seizure has been submitted to arbitration under the provisions of the Convention for the Settlement of Investment Disputes, or in another mutually agreed upon forum, and the President promptly furnishes a copy of such determination to the Senate and House of Representatives.

5. Such country fails to act in good faith in recognizing as binding or in enforcing arbitral awards in favor of United States citizens or a corporation, partnership, or association which is 50 percent or more beneficially owned by United States citizens, which have been made by arbitrators appointed for each case or by permanent arbitral bodies to which the parties involved have submitted their dispute.

6. Such country aids or abets, by granting sanctuary from prosecution to, any individual or group which has committed an act of international terrorism or the Secretary of State makes a determination with respect to such country under section 6(j)(1)(A) of the Export Administration Act of 1979 (50 U.S.C. Appx. section 2405(j)(1)(A)) or such country has not taken steps to support the efforts of the United States to combat terrorism.

7. Such country has not taken or is not taking steps to afford internationally recognized worker rights to workers in the country (including any designated zone in that country).

8. Such country has not implemented its commitments to eliminate the worst forms of child labor.

Section 502(c) provides that, in determining whether to designate any country as a GSP beneficiary developing country, the President shall take into account:

1. An expression by such country of its desire to be so designated;

2. The level of economic development of such country, including its per capita gross national product, the living standards of its inhabitants, and any other economic factors which the President deems appropriate;

3. Whether or not other major developed countries are extending generalized preferential tariff treatment to such country;

4. The extent to which such country has assured the United States that it will provide equitable and reasonable access to the markets and basic commodity resources of such country and the extent to which such country has assured the United States that it will refrain from engaging in unreasonable export practices;

5. The extent to which such country is providing adequate and effective protection of intellectual property rights;

6. The extent to which such country has taken action to—

(a) Reduce trade distorting investment practices and policies (including export performance requirements); and (b) Reduce or eliminate barriers to trade in services; and

7. Whether or not such country has taken or is taking steps to afford to workers in that country (including any designated zone in that country) internationally recognized worker rights. Note that the Trade Act of 2002 amended paragraph (D) of the definition of the term ''internationally recognized worker rights,'' which now includes: (A) The right of association; (B) the right to organize and bargain collectively; (C) a prohibition on the use of any form of forced or compulsory labor; (D) a minimum age for the employment of children and a prohibition on the worst forms of child labor as defined in paragraph (6) of section 507(4) of the Act; and (E) acceptable conditions of work with respect to minimum wages, hours of work, and occupational safety and health.

To designate a country as a least-developed beneficiary developing country, the President must consider the criteria in section 502(c), as well as the criteria in section 501 of the Act. Section 501 provides that, in extending preferences under the GSP, the President shall have due regard for:

1. The effect such action will have on furthering the economic development of developing countries through the expansion of their exports.

2. The extent to which other major developed countries are undertaking a comparable effort to assist developing countries by granting generalized preferences with respect to imports of products of such countries.

3. The anticipated impact of such action on United States producers of like or directly competitive products.

4. The extent of the beneficiary developing country's competitiveness with respect to eligible articles.

**Requirements for Submissions**

All submissions must conform to the GSP regulations set forth at 15 CFR Part 2007, except as modified below. Comments must be submitted, in English, to the Chairman of the GSP Subcommittee of the Trade Policy Staff Committee (TPSC) as soon as possible, but not later than 5 p.m., January 13, 2006.

In order to facilitate prompt consideration of submissions, USTR requires electronic e-mail submissions in response to this notice. Hand-delivered submissions will not be accepted. Submissions should be single-copy transmissions in English with the total submission not to exceed 50 single-spaced standard letter-size pages. The e-mail transmission should use the following subject line: ''Liberia GSP Eligibility Review''. Documents must be submitted as MSWord (''.doc''), WordPerfect (''.wpd''), or text (''.txt'') files. Documents submitted as electronic image files or containing imbedded images (for example, ''.jpg'', ''.pdf'', ''.bmp'', or ''.gif'') will not be accepted. Spreadsheets submitted as supporting documentation are acceptable as Quattro Pro or Excel files, pre-formatted for printing only on 8½ x 11 inch paper. To the extent possible, any data attachments to the submission should be included in the same file as the submission itself, and not as separate files.

Submissions in response to this notice will be subject to public inspection by

appointment with the staff of the USTR Public Reading Room except for information granted ''business confidential'' status pursuant to 15 CFR 2003.6.

If the submission contains business confidential information, a non-confidential version of the submission must also be submitted that indicates where confidential information was redacted by inserting asterisks where material was deleted. In addition, the confidential version must be clearly marked ''BUSINESS CONFIDENTIAL'' at the top and bottom of each page of the document. The non-confidential version must be clearly marked ''PUBLIC'' or ''NON-CONFIDENTIAL'' at the top and bottom of each page. Documents that are submitted without any marking might not be accepted or will be considered public documents.

For any document containing business confidential information submitted as an electronic attached file to an e-mail transmission, the file name of the business confidential version should begin with the characters ''BC-'', and the file name of the public version should begin with the character ''P-''. The BC-'' or ''P-'' should be followed by the name of the party (government, company, union, association, etc.) which is submitting the comments.

E-mail submissions should not include separate cover letters or messages in the message area of the e-mail; information that might appear in any cover letter should be included directly in the attached file containing the submission itself, including the sender's identifying information with telephone number, fax number, and e-mail address. The e-mail address for these submissions is *FR0441@USTR.GOV.* Documents not submitted in accordance with these instructions might not be considered in this review. If unable to provide submissions by e-mail, please contact the GSP Subcommittee to arrange for an alternative method of transmission.

Public versions of all documents relating to this review will be available for public review approximately three weeks after the due date by appointment in the USTR Public Reading Room, 1724 F Street NW., Washington, DC. Availability of documents may be ascertained, and appointments may be made from 9:30 a.m. to noon and 1 p.m. to 4 p.m., Monday through Friday, by calling 202–395–6186.

**Marideth J. Sandler,**

*Executive Director for the GSP Program; Chairman, GSP Subcommittee of the Trade Policy Staff Committee.*

[FR Doc. E5–8021 Filed 12–28–05; 8:45 am]

BILLING CODE 3190–W6–P

## OFFICE OF THE UNITED STATES TRADE REPRESENTATIVE

## Generalized System of Preferences (GSP): Import Statistics Relating to Competitive Need Limitations; Invitation for Public Comment on Possible De Minimis Waivers and Redesignations

**AGENCY:** Office of the United States Trade Representative.

**ACTION:** Notice.

**SUMMARY:** This notice is to inform the public of the availability of interim 2005 import statistics relating to competitive need limitations (CNLs) under the Generalized System of Preferences (GSP) program. Public comments are invited by 5 p.m., January 27, 2006, regarding possible *de minimis* CNL waivers with respect to particular articles, and possible redesignations under the GSP program of articles currently not eligible for GSP benefits because they previously exceeded the CNLs.

**FOR FURTHER INFORMATION CONTACT:** The GSP Subcommittee of the Trade Policy Staff Committee, Office of the United States Trade Representative, 1724 F Street, NW., Room F–220, Washington, DC 20508. The telephone number is (202) 395–6971.

**SUPPLEMENTARY INFORMATION:**

### I. Competitive Need Limitations

The GSP program provides for the duty-free importation of designated articles when imported from designated beneficiary developing countries (BDCs). The GSP program is authorized by title V of the Trade Act of 1974 (19 U.S.C. 2461, *et seq.*), as amended (the ''1974 Act''), and is implemented in accordance with Executive Order 11888 of November 24, 1975, as modified by subsequent Executive Orders and Presidential Proclamations.

Section 503(c)(2)(A) of the 1974 Act sets out the two competitive need limitations (CNLs). When the President determines that a BDC exported to the United States during a calendar year either (1) a quantity of a GSP-eligible article having a value in excess of the applicable amount for that year ($120 million for 2005), or (2) a quantity of a GSP-eligible article having a value equal to or greater than 50 percent of the value of total U.S. imports of the article from all countries (the ''50 percent CNL''), the President must terminate GSP duty-free treatment for that article from that BDC by no later than July 1 of the next calendar year.

Under section 503(c)(2)(F) of the 1974 Act, the President may waive the 50 percent CNL with respect to an eligible article imported from a BDC if the value of total imports of that article from all countries during the calendar year did not exceed the applicable *de minimis* amount for that year ($17.5 million for 2005).

Under section 503(c)(2)(C) of the 1974 Act, if imports of an eligible article from a BDC ceased to receive duty-free treatment due to exceeding a CNL in a prior year, the President may redesignate such an article for duty-free treatment if imports in the most recently completed calendar year did not exceed the CNLs.

### II. Implementation of Competitive Need Limitations, Waivers, and Redesignations

Exclusions from GSP duty-free treatment where CNLs have been exceeded will be effective July 1, 2006, unless previously granted a waiver by the President. CNL exclusions, as well as decisions with respect to *de minimis* waivers and redesignations, will be based on full 2005 calendar year import statistics.

### III. Interim 2005 Import Statistics

In order to provide advance notice of articles that may exceed the CNLs for 2005, and to afford an opportunity for comment regarding potential *de minimis* waivers and redesignations, ''Interim 2005 Import Statistics Relating to Competitive Need Limitations'' that cover the first 10 months of 2005 can be viewed at: *http://www.ustr.gov/Trade_Development/Preference_Programs/GSP/Interim_2005_Import_Statistics_Relating_to_Competitive_Need_Limitations.html.*

If unable to access these statistics on the USTR Web site, contact the GSP Subcommittee of the Trade Policy Staff Committee, which will make alternate arrangements to provide the lists.

Full calendar year 2005 data for individual tariff subheadings will be available in mid-February on the Web site of the U.S. International Trade Commission at *http://dataweb.usitc.gov/.*

The four lists comprising the ''Interim 2005 Import Statistics Relating to

Competitive Need Limitations'' contain, for each article, the Harmonized Tariff Schedule of the United States (HTSUS) subheading and BDC of origin, the value of imports of the article for the first 10 months of 2005, and the percentage of total imports of that article from all countries. The flags indicate the status of GSP eligibility. Articles marked with an ''*'' are those that have been excluded from GSP eligibility for the entire past calendar year. Articles marked with a ''D'' are those that, based on interim 2005 data, may be eligible for a *de minimis* waiver of the 50 percent CNL.

List I shows GSP-eligible articles from BDCs that have already exceeded the CNL by having been exported in excess of $120 million, or by an amount greater than 50% of the total U.S. import value in 2005. Those articles without a flag were GSP-eligible during 2005 but stand to lose GSP duty-free treatment on July 1, 2006, unless a waiver is granted. Such waivers are required to have been previously requested in the 2005 GSP Annual Review.

List II identifies GSP-eligible articles from BDCs that (1) have not yet exceeded, but are approaching, the $120 million CNL for the period January-October, 2005, or (2) are close to or above the 50 percent CNL. Depending on final calendar year 2005 import data, these articles stand to lose GSP duty-free treatment on July 1, 2006, unless a waiver is granted. Such waivers are required to have been previously requested in the 2005 GSP Annual Review.

List III is a subset of List II. List III identifies GSP-eligible articles from BDCs that are close to or above the 50 percent CNL, but that may be eligible for a *de minimis* waiver of the 50 percent CNL. Actual eligibility for *de minimis* waivers will depend on final calendar year 2005 import data. Each year, *de minimis* waivers are considered automatically without a petition, and public comments are invited.

List IV shows GSP-eligible articles from certain BDCs that are currently not receiving GSP duty-free treatment, but that have import levels (based on interim 2005 data) below the CNLs and thus may be eligible to be considered for redesignation, depending on final calendar year 2005 import data. Recommendations to the President on redesignations are normally made in with any recommendations resulting from the annual review, and public comments are invited.

The four lists comprising the ''Interim 2005 Import Statistics Relating to Competitive Need Limitations'' are computer-generated and based on interim 2005 data, and may not include all articles to which the GSP CNLs may apply. All determinations and decisions regarding the CNLs of the GSP program are based on full calendar year 2005 import data with respect to each GSP-eligible article. Each interested party is advised to conduct its own review of 2005 import data with regard to the possible application of GSP CNLs.

## IV. Public Comments

*Requirements for Submissions*

All submissions must conform to the GSP regulations set forth at 15 CFR Part 2007, except as modified below. Furthermore, each party providing comments should indicate on the first page of the submission its name, the relevant HTSUS subheading(s), the BDC of interest, and the type of action (*e.g., de minimis* waiver or redesignation) in which the party is interested.

Comments must be submitted, in English, to the Chairman of the GSP Subcommittee of the Trade Policy Staff Committee (TPSC) as soon as possible, but not later than 5 p.m., January 27, 2006.

In order to facilitate prompt consideration of submissions, USTR requires electronic e-mail submissions in response to this notice. Hand-delivered submissions will not be accepted. Submissions should be single-copy transmissions in English with the total submission not to exceed 30 single-spaced standard letter-size pages, including attachments, in 12-point type as a digital file attached to an e-mail transmission. The e-mail transmission should use the following subject line: ''Comments on 2005 Possible *De Minimus* Waivers and Redesignations'' followed by the HTSUS subheading number and BDC of origin as set out in the appropriate list. Documents must be submitted as MSWord (''.doc''), WordPerfect (''.wpd''), or text (''.txt'') files. Documents will not be accepted if submitted as electronic image files or containing imbedded images (for example, ''.jpg'', ''.tif'', ''.pdf'', ''.bmp'', or ''.gif''). Spreadsheets submitted as supporting documentation are acceptable as Quattro Pro or Excel files, pre-formatted for printing only on 8½ x 11 inch paper. To the extent possible, any data attachments to the submission should be included in the same file as the submission itself, and not as separate files.

Submissions in response to this notice will be subject to public inspection by appointment with the staff of the USTR Public Reading Room except for information granted ''business confidential'' status pursuant to 15 CFR 2003.6.

If the submission contains business confidential information, a non-confidential version of the submission must also be submitted that indicates where confidential information was redacted by inserting asterisks where material was deleted. In addition, the confidential version must be clearly marked ''BUSINESS CONFIDENTIAL'' at the top and bottom of each page of the document. The non-confidential version must be clearly marked ''PUBLIC'' or ''NON-CONFIDENTIAL'' at the top and bottom of each page. Documents that are submitted without any marking might not be accepted or will be considered public documents.

For any document containing business confidential information submitted as an electronic attached file to an e-mail transmission, the file name of the business confidential version should begin with the characters ''BC-'', and the file name of the public version should begin with the character ''P-''. The BC-'' or ''P-'' should be followed by the name of the party (government, company, union, association, etc.) which is submitting the comments.

E-mail submissions should not include separate cover letters or messages in the message area of the e-mail; information that might appear in any cover letter should be included directly in the attached file containing the submission itself, including the sender's identifying information with telephone number, fax number, and e-mail address. The e-mail address for these submissions is *FR0441@USTR.GOV.* Documents not submitted in accordance with these instructions might not be considered in this review. If unable to provide submissions by e-mail, please contact the GSP Subcommittee to arrange for an alternative method of transmission.

Public versions of all documents relating to this review will be available for public review approximately three weeks after the due date by appointment in the USTR Public Reading Room, 1724 F Street NW., Washington, DC. Availability of documents may be ascertained, and appointments may be made from 9:30 a.m. to noon and 1 p.m. to 4 p.m., Monday through Friday, by calling 202–395–6186.

**Marideth J. Sandler,**

*Executive Director for the GSP Program; Chairman, GSP Subcommittee of the Trade Policy Staff Committee.*

[FR Doc. E5–8075 Filed 12–28–05; 8:45 am]

BILLING CODE 3190–W6–P

## DEPARTMENT OF TRANSPORTATION

### Maritime Administration

### Reports, Forms and Recordkeeping Requirements; Agency Information Collection Activity Under OMB Review

**AGENCY:** Maritime Administration, DOT.

**ACTION:** Notice and request for comments.

**SUMMARY:** In compliance with the Paperwork Reduction Act of 1995 (44 U.S.C. 3501 *et seq.*), this notice announces that the Information Collection abstracted below has been forwarded to the Office of Management and Budget (OMB) for review and approval. The nature of the information collection is described as well as its expected burden. The **Federal Register** Notice with a 60-day comment period soliciting comments on the following collection of information was published on September 9, 2005, and comments were due by November 8, 2005. No comments were received.

**DATES:** Comments must be submitted on or before January 30, 2006.

**FOR FURTHER INFORMATION CONTACT:** Brenda Reed-Perry, Maritime Administration, 400 Seventh Street Southwest, Washington, DC 20590. Telephone: 202–366–0845; FAX: 202–366–3746; or E-mail: *Brenda.reed-perry@dot.gov*. Copies of this collection also can be obtained from that office.

**SUPPLEMENTARY INFORMATION:** Maritime Administration (MARAD).

*Title:* Maritime Administration Service Obligation Compliance Report and Merchant Marine Reserve/U.S. Naval Reserve Annual Report.

*OMB Control Number:* 2133–0509.

*Type of Request:* Extension of currently approved collection.

*Affected Public:* Every student and graduate of the U.S. Merchant Marine Academy and every subsidized State maritime academy student.

*Forms:* MA–930.

*Abstract:* The Maritime Education and Training Act of 1980 imposes a service obligation on every graduate of the U.S. Merchant Marine Academy and every subsidized State maritime academy graduate who received a student incentive payment. This mandatory service obligation is for the Federal financial assistance the graduate received as a student and requires the graduate to maintain a license as an officer in the merchant marine and to report on reserve status, training, and employment for applicable periods.

*Annual Estimated Burden Hours:* 872 hours.

*Addressee:* Send comments to the Office of Information and Regulatory Affairs, Office of Management and Budget, 725 17th Street Northwest, Washington, DC 20503, Attention MARAD Desk Officer.

*Comments are invited on:* Whether the proposed collection of information is necessary for the proper performance of the functions of the agency, including whether the information will have practical utility; the accuracy of the agency's estimate of the burden of the proposed information collection; ways to enhance the quality, utility and clarity of the information to be collected; and ways to minimize the burden of the collection of information on respondents, including the use of automated collection techniques or other forms of information technology. A comment to OMB is best assured of having its full effect if OMB receives it within 30 days of publication.

**Authority:** 49 CFR 1.66.

Issued in Washington, DC on December 23, 2005.

**Joel C. Richard,**

*Secretary, Maritime Administration.*

[FR Doc. E5–8076 Filed 12–28–05; 8:45 am]

BILLING CODE 4910–81–P

## DEPARTMENT OF TRANSPORTATION

### Maritime Administration

### Reports, Forms and Recordkeeping Requirements; Agency Information Collection Activity under OMB Review

**AGENCY:** Maritime Administration, DOT.

**ACTION:** Notice and request for comments.

**SUMMARY:** In compliance with the Paperwork Reduction Act of 1995 (44 U.S.C. 3501 *et seq.*), this notice announces that the Information Collection abstracted below has been forwarded to the Office of Management and Budget (OMB) for review and approval. The nature of the information collection is described as well as its expected burden. The **Federal Register** Notice with a 60-day comment period soliciting comments on the following collection of information was published on September 9, 2005, and comments were due by November 8, 2005. No comments were received.

**DATES:** Comments must be submitted on or before January 30, 2006.

**FOR FURTHER INFORMATION CONTACT:** Rodney McFadden, Maritime Administration, 400 Seventh Street SW., Washington, DC 20590. Telephone: 202–366–2647; FAX: 202–493–2180, or E-mail: *Rod.McFadden@dot.gov*. Copies of this collection also can be obtained from that office.

**SUPPLEMENTARY INFORMATION:** Maritime Administration (MARAD).

*Title:* Information to Determine Seamen's Reemployment Rights—National Emergency.

*OMB Control Number:* 2133–0526.

*Type of Request:* Extension of currently approved collection.

*Affected Public:* U.S. merchant marine seamen who have completed designated national service during a time of maritime mobilization and are seeking reemployment with a prior employer.

*Forms:* None.

*Abstract:* MARAD is requesting approval of this collection in an effort to implement provisions of the Maritime Security Act of 1996. These provisions grant reemployment rights and other benefits to certain merchant seamen serving aboard vessels used by the United States during times of national emergencies. The Maritime Security Act of 1996 establishes the procedures for obtaining the necessary MARAD certification for reemployment rights and other benefits.

*Annual Estimated Burden Hours:* 50 hours.

*Addressee:* Send comments to the Office of Information and Regulatory Affairs, Office of Management and Budget, 725 17th Street NW., Washington, DC 20503, Attention MARAD Desk Officer.

*Comments are invited on:* Whether the proposed collection of information is necessary for the proper performance of the functions of the agency, including whether the information will have practical utility; the accuracy of the agency's estimate of the burden of the proposed information collection; ways to enhance the quality, utility and clarity of the information to be collected; and ways to minimize the burden of the collection of information on respondents, including the use of automated collection techniques or other forms of information technology. A comment to OMB is best assured of having its full effect if OMB receives it within 30 days of publication.

**Authority:** 49 CFR 1.66.

Issued in Washington, DC on December 23, 2005.

**Joel C. Richard,**

*Secretary, Maritime Administration.*

[FR Doc. E5–8077 Filed 12–28–05; 8:45 am]

BILLING CODE 4910–81–P

## DEPARTMENT OF TRANSPORTATION

### Maritime Administration

**[Docket Number: 2005–23442]**

### Requested Administrative Waiver of the Coastwise Trade Laws

**AGENCY:** Maritime Administration, DOT.

**ACTION:** Invitation for public comments on a requested administrative waiver of the Coastwise Trade Laws for the vessel CAT'S MEOW.

**SUMMARY:** As authorized by Pub. L. 105–383 and Pub. L. 107–295, the Secretary of Transportation, as represented by the Maritime Administration (MARAD), is authorized to grant waivers of the U.S.-build requirement of the coastwise laws under certain circumstances. A request for such a waiver has been received by MARAD. The vessel, and a brief description of the proposed service, is listed below. The complete application is given in DOT docket 2005–23442 at *http://dms.dot.gov*. Interested parties may comment on the effect this action may have on U.S. vessel builders or businesses in the U.S. that use U.S.-flag vessels. If MARAD determines, in accordance with Pub. L. 105–383 and MARAD's regulations at 46 CFR Part 388 (68 FR 23084; April 30, 2003), that the issuance of the waiver will have an unduly adverse effect on a U.S.-vessel builder or a business that uses U.S.-flag vessels in that business, a waiver will not be granted. Comments should refer to the docket number of this notice and the vessel name in order for MARAD to properly consider the comments. Comments should also state the commenter's interest in the waiver application, and address the waiver criteria given in § 388.4 of MARAD's regulations at 46 CFR Part 388.

**DATES:** Submit comments on or before January 30, 2006.

**ADDRESSES:** Comments should refer to docket number MARAD–2005–23442. Written comments may be submitted by hand or by mail to the Docket Clerk, U.S. DOT Dockets, Room PL–401, Department of Transportation, 400 7th St., SW., Washington, DC 20590–0001. You may also send comments electronically via the Internet at *http://dmses.dot.gov/submit/*. All comments will become part of this docket and will be available for inspection and copying at the above address between 10 a.m. and 5 p.m., E.T., Monday through Friday, except federal holidays. An electronic version of this document and all documents entered into this docket is available on the World Wide Web at *http://dms.dot.gov*.

**FOR FURTHER INFORMATION CONTACT:** Joann Spittle, U.S. Department of Transportation, Maritime Administration, MAR–830 Room 7201, 400 7th Street, SW., Washington, DC 20590. Telephone: 202–366–5979.

**SUPPLEMENTARY INFORMATION:** As described by the applicant the intended service of the vessel CAT'S MEOW is:

*Intended Use:* ''The intended commercial use is to carry passengers for Captained Sailing Charters in the Great Lakes and connecting/adjacent waterways.''

*Geographic Region:* While operating primarily out of South Haven, Michigan, the charter area will include the Great Lakes (Lake Michigan, Lake Superior, Lake Erie, Lake Huron, Lake Ontario), and the adjacent canals, harbors and waterways.

By order of the Maritime Administrator.

Dated: December 23, 2005.

**Joel C. Richard,**

*Secretary, Maritime Administration.*

[FR Doc. E5–8078 Filed 12–28–05; 8:45 am]

BILLING CODE 4910–81–P

## DEPARTMENT OF TRANSPORTATION

### Maritime Administration

**[Docket Number: 2005–23443]**

### Requested Administrative Waiver of the Coastwise Trade Laws

**AGENCY:** Maritime Administration, DOT.

**ACTION:** Invitation for public comments on a requested administrative waiver of the Coastwise Trade Laws for the vessel GRIN N BARRETT.

**SUMMARY:** As authorized by Pub. L. 105–383 and Pub. L. 107–295, the Secretary of Transportation, as represented by the Maritime Administration (MARAD), is authorized to grant waivers of the U.S.-build requirement of the coastwise laws under certain circumstances. A request for such a waiver has been received by MARAD. The vessel, and a brief description of the proposed service, is listed below. The complete application is given in DOT docket 2005–23443 at *http://dms.dot.gov*. Interested parties may comment on the effect this action may have on U.S. vessel builders or businesses in the U.S. that use U.S.-flag vessels. If MARAD determines, in accordance with Pub. L. 105–383 and MARAD's regulations at 46 CFR Part 388 (68 FR 23084; April 30, 2003), that the issuance of the waiver will have an unduly adverse effect on a U.S.-vessel builder or a business that uses U.S.-flag vessels in that business, a waiver will not be granted. Comments should refer to the docket number of this notice and the vessel name in order for MARAD to properly consider the comments. Comments should also state the commenter's interest in the waiver application, and address the waiver criteria given in § 388.4 of MARAD's regulations at 46 CFR part 388.

**DATES:** Submit comments on or before January 30, 2006.

**ADDRESSES:** Comments should refer to docket number MARAD–2005–23443. Written comments may be submitted by hand or by mail to the Docket Clerk, U.S. DOT Dockets, Room PL–401, Department of Transportation, 400 7th St., SW., Washington, DC 20590–0001. You may also send comments electronically via the Internet at *http://dmses.dot.gov/submit/*. All comments will become part of this docket and will be available for inspection and copying at the above address between 10 a.m. and 5 p.m., E.T., Monday through Friday, except federal holidays. An electronic version of this document and all documents entered into this docket is available on the World Wide Web at *http://dms.dot.gov*.

**FOR FURTHER INFORMATION CONTACT:** Joann Spittle, U.S. Department of Transportation, Maritime Administration, MAR–830 Room 7201, 400 Seventh Street, SW., Washington, DC 20590. Telephone 202–366–5979.

**SUPPLEMENTARY INFORMATION:** As described by the applicant the intended service of the vessel GRIN N BARRETT is:

*Intended Use:* ''fishing.''

*Geographic Region:* Long Island Sound. Including the States of Connecticut, Rhode Island, New York, Maryland, North Carolina, South Carolina, Georgia and Florida.

By order of the Maritime Administrator.

Dated: December 23, 2005.

**Joel C. Richard,**

*Secretary, Maritime Administration.*

[FR Doc. E5–8079 Filed 12–28–05; 8:45 am]

BILLING CODE 4910–81–P

## DEPARTMENT OF TRANSPORTATION

### Maritime Administration

**[Docket Number: 2005–23444]**

### Requested Administrative Waiver of the Coastwise Trade Laws

**AGENCY:** Maritime Administration, DOT.

**ACTION:** Invitation for public comments on a requested administrative waiver of the Coastwise Trade Laws for the vessel HOPSCOTCH.

**SUMMARY:** As authorized by Pub. L. 105–383 and Pub. L. 107–295, the Secretary of Transportation, as represented by the Maritime Administration (MARAD), is authorized to grant waivers of the U.S.-build requirement of the coastwise laws under certain circumstances. A request for such a waiver has been received by MARAD. The vessel, and a brief description of the proposed service, is listed below. The complete application is given in DOT docket 2005–23444 at *http://dms.dot.gov.* Interested parties may comment on the effect this action may have on U.S. vessel builders or businesses in the U.S. that use U.S.-flag vessels. If MARAD determines, in accordance with Pub. L. 105–383 and MARAD's regulations at 46 CFR Part 388 (68 FR 23084; April 30, 2003), that the issuance of the waiver will have an unduly adverse effect on a U.S.-vessel builder or a business that uses U.S.-flag vessels in that business, a waiver will not be granted. Comments should refer to the docket number of this notice and the vessel name in order for MARAD to properly consider the comments. Comments should also state the commenter's interest in the waiver application, and address the waiver criteria given in § 388.4 of MARAD's regulations at 46 CFR Part 388.

**DATES:** Submit comments on or before January 30, 2006.

**ADDRESSES:** Comments should refer to docket number MARAD–2005–23444. Written comments may be submitted by hand or by mail to the Docket Clerk, U.S. DOT Dockets, Room PL–401, Department of Transportation, 400 7th St., SW., Washington, DC 20590–0001. You may also send comments electronically via the Internet at *http://dmses.dot.gov/submit/.* All comments will become part of this docket and will be available for inspection and copying at the above address between 10 a.m. and 5 p.m., E.T., Monday through Friday, except federal holidays. An electronic version of this document and all documents entered into this docket is available on the World Wide Web at *http://dms.dot.gov.*

**FOR FURTHER INFORMATION CONTACT:** Joann Spittle, U.S. Department of Transportation, Maritime Administration, MAR–830 Room 7201, 400 Seventh Street, SW., Washington, DC 20590. Telephone 202–366–5979.

**SUPPLEMENTARY INFORMATION:** As described by the applicant the intended service of the vessel HOPSCOTCH is:

*Intended Use:* ''The boat is in charter for pleasure use. There are times when charterers require a licensed captain or sailing instructor.''

*Geographic Region:* Washington State.

By order of the Maritime Administrator.
Dated: December 23, 2005.

**Joel C. Richard,**

*Secretary, Maritime Administration.*

[FR Doc. E5–8080 Filed 12–28–05; 8:45 am]

BILLING CODE 4910–81–P

---

## DEPARTMENT OF TRANSPORTATION

### Maritime Administration

**[Docket Number: 2005–23446]**

### Requested Administrative Waiver of the Coastwise Trade Laws

**AGENCY:** Maritime Administration, Department of Transportation.

**ACTION:** Invitation for public comments on a requested administrative waiver of the Coastwise Trade Laws for the vessel LANDFALL.

**SUMMARY:** As authorized by Public Law 105–383 and Public Law 107–295, the Secretary of Transportation, as represented by the Maritime Administration (MARAD), is authorized to grant waivers of the U.S.-build requirement of the coastwise laws under certain circumstances. A request for such a waiver has been received by MARAD. The vessel, and a brief description of the proposed service, is listed below. The complete application is given in DOT docket 2005–23446 at *http://dms.dot.gov.* Interested parties may comment on the effect this action may have on U.S. vessel builders or businesses in the U.S. that use U.S.-flag vessels. If MARAD determines, in accordance with Public Law 105–383 and MARAD's regulations at 46 CFR Part 388 (68 FR 23084; April 30, 2003), that the issuance of the waiver will have an unduly adverse effect on a U.S.-vessel builder or a business that uses U.S.-flag vessels in that business, a waiver will not be granted. Comments should refer to the docket number of this notice and the vessel name in order for MARAD to properly consider the comments. Comments should also state the commenter's interest in the waiver application, and address the waiver criteria given in § 388.4 of MARAD's regulations at 46 CFR Part 388.

**DATES:** Submit comments on or before January 30, 2006.

**ADDRESSES:** Comments should refer to docket number MARAD–2005–23446. Written comments may be submitted by hand or by mail to the Docket Clerk, U.S. DOT Dockets, Room PL–401, Department of Transportation, 400 7th St., SW., Washington, DC 20590–0001. You may also send comments electronically via the Internet at *http://dmses.dot.gov/submit/.* All comments will become part of this docket and will be available for inspection and copying at the above address between 10 a.m. and 5 p.m., E.T., Monday through Friday, except Federal holidays. An electronic version of this document and all documents entered into this docket is available on the World Wide Web at *http://dms.dot.gov.*

**FOR FURTHER INFORMATION CONTACT:** Joann Spittle, U.S. Department of Transportation, Maritime Administration, MAR–830 Room 7201, 400 Seventh Street, SW., Washington, DC 20590. Telephone 202–366–5979.

**SUPPLEMENTARY INFORMATION:** As described by the applicant the intended service of the vessel *LANDFALL* is:

*Intended Use:* ''Captained one half day or one day sailing charters.''

*Geographic Region:* Maryland and Florida.

Dated: December 23, 2005.
By order of the Maritime Administrator.

**Joel C. Richard,**

*Secretary, Maritime Administration.*

[FR Doc. E5–8083 Filed 12–28–05; 8:45 am]

BILLING CODE 4910–81–P

---

## DEPARTMENT OF TRANSPORTATION

### Maritime Administration

**[Docket No.: 2005–23445]**

### Requested Administrative Waiver of the Coastwise Trade Laws

**AGENCY:** Maritime Administration, Department of Transportation.

**ACTION:** Invitation for public comments on a requested administrative waiver of the Coastwise Trade Laws for the vessel ULTRA VIOLET.

**SUMMARY:** As authorized by Pub. L. 105–383 and Pub. L. 107–295, the Secretary of Transportation, as represented by the Maritime Administration (MARAD), is authorized to grant waivers of the U.S.-build requirement of the coastwise laws under certain circumstances. A request for such a waiver has been received by MARAD. The vessel, and a brief description of the proposed service, is listed below. The complete application is given in DOT docket 2005–23445 at *http://dms.dot.gov.* Interested parties may comment on the effect this action may have on U.S. vessel builders or businesses in the U.S. that use U.S.-flag vessels. If MARAD determines, in accordance with Pub. L. 105–383 and MARAD's regulations at 46 CFR part 388 (68 FR 23084; April 30, 2003), that the issuance of the waiver will have an unduly adverse effect on a U.S.-vessel builder or a business that uses U.S.-flag

vessels in that business, a waiver will not be granted. Comments should refer to the docket number of this notice and the vessel name in order for MARAD to properly consider the comments. Comments should also state the commenter's interest in the waiver application, and address the waiver criteria given in § 388.4 of MARAD's regulations at 46 CFR part 388.

**DATES:** Submit comments on or before January 30, 2006.

**ADDRESSES:** Comments should refer to docket number MARAD–2005–23445. Written comments may be submitted by hand or by mail to the Docket Clerk, U.S. DOT Dockets, Room PL–401, Department of Transportation, 400 7th St., SW., Washington, DC 20590–0001. You may also send comments electronically via the Internet at *http://dmses.dot.gov/submit/.* All comments will become part of this docket and will be available for inspection and copying at the above address between 10 a.m. and 5 p.m., e.t., Monday through Friday, except Federal holidays. An electronic version of this document and all documents entered into this docket is available on the World Wide Web at *http://dms.dot.gov.*

**FOR FURTHER INFORMATION CONTACT:** Joann Spittle, U.S. Department of Transportation, Maritime Administration, MAR–830 Room 7201, 400 Seventh Street, SW., Washington, DC 20590. Telephone 202–366–5979.

**SUPPLEMENTARY INFORMATION:** As described by the applicant the intended service of the vessel ULTRA VIOLET is:

*Intended Use:* ''Day charter, sightseeing voyages.''

*Geographic Region:* Narragansett Bay, RI.

Dated: December 23, 2005.

By order of the Maritime Administrator.

**Joel C. Richard,**

*Secretary, Maritime Administration.*

[FR Doc. E5–8081 Filed 12–28–05; 8:45 am]

**BILLING CODE 4910–81–P**

---

## DEPARTMENT OF TRANSPORTATION

### National Highway Traffic Safety Administration

### Denial of Motor Vehicle Defect Petition

**AGENCY:** National Highway Traffic Safety Administration (NHTSA), Department of Transportation.

**ACTION:** Denial of petition for a defect investigation.

**SUMMARY:** This notice sets forth the reasons for the denial of a petition submitted by Mr. Chris Ruh, Mr. Don Huston, Mr. Robert Guthrie, Mr. Jeff Babiak, Mr. J. A. Massey, Ms. Michele Brown, Ms. Mary Mabry, Mr. Chris Taylor, and Mr. Victor Aguilar (hereinafter, ''Petitioners'') to NHTSA's Office of Defects Investigation (ODI), received September 6, 2005, under 49 U.S.C. 30162, requesting that the agency commence a proceeding to determine the existence of a defect related to motor vehicle safety with respect to the cylinder head and spark plug assembly performance of model year (MY) 1997 through 2004 Ford vehicles with Triton V–8 and V–10 engines. After a review of the petition and other information, NHTSA has concluded that further expenditure of the agency's investigative resources on the issues raised by the petition does not appear to be warranted. The agency accordingly has denied the petition. The petition is hereinafter identified as DP05–005.

**FOR FURTHER INFORMATION CONTACT:** Ms. Cheryl Rose, Vehicle Control Division, Office of Defects Investigation, NHTSA, 400 Seventh Street, SW., Washington, DC 20590. Telephone: (202) 366–1869.

**SUPPLEMENTARY INFORMATION:**

On September 6, 2005, ODI received a petition submitted by Mr. Donald W. Ricketts of Santa Clarita, CA, on the behalf of the ''Petitioners'' requesting that the agency investigate allegations of engine spark plug ejection in certain MY 1997 through 2004 Ford vehicles with Triton V–8 and V–10 engines (hereinafter, subject vehicles). The ''Petitioners'' allege the following regarding the subject vehicles:

(1) The spark plug-cylinder head assembly design is insufficient to retain the spark plugs in the cylinder heads for the life of the spark plug unless periodically inspected and, if necessary, torqued.

(2) As the vehicle ages, the spark plugs loosen in the threaded head and/or the metal fatigues causing the spark plugs to be blown out of the head.

(3) The millions of subject vehicles containing the Triton V–8 and V–10 engine present a safety hazard to occupants of the vehicle, nearby persons, and other motorists on the road.

(4) The spark plugs shoot out of the cylinder port suddenly and with great force damaging the engine and sometimes puncturing the hood.

(a) Fire and explosion are likely if the plugs puncture nearby fuel lines.

(b) Owners report a strong smell of gasoline vapor after blowouts occur and the cylinder is open, presenting an additional danger of fire and explosion.

(c) The sudden expulsion of the plug out of the head often causes drivers to be startled and lose control of the vehicle momentarily.

(d) The vehicles always lose power, and often stall.

In response to NHTSA's request for whatever supporting information the ''Petitioners'' could provide, one petitioner and Mr. Donald Ricketts on behalf of the ''Petitioners,'' submitted several complaints and repair invoices concerning the subject of their allegations. NHTSA has carefully analyzed those submissions, as well as relevant complaints in its own database, interviewed many of the complainants, including some of the ''Petitioners,'' and examined a vehicle containing the alleged defect.

ODI received a total of 474 non-duplicative complaints on the subject vehicles, including the several complaints submitted by Mr. Donald Ricketts on behalf of the ''Petitioners'' and some complaints received directly from the ''Petitioners'' where the complainant, or the dealer repairing the vehicle, reported that a spark plug detached from the cylinder and/or ejected from the engine (hereinafter, alleged defect). As of December 8, 2005, ODI is not aware of any allegations where the alleged defect resulted in a loss of vehicle control, a crash, an injury, or a fatality in any of the 10,319,810 subject vehicles. In addition, ODI is aware of only two incidents where the vehicle stalled without restart.

Information contained in the ODI consumer complaints and obtained from 72 telephone interviews with complainants showed the following:

(1) 99% of the complaints were on MY 1997 to 2002 subject vehicles.

(2) Most the complainants reported hearing a loud pop while driving or upon starting up the vehicle followed by a loud, repetitive clicking or popping sound.

(3) Many of the complainants reported that the popping sound was accompanied by some loss of vehicle power; however, in 99% of the incidents reported, the vehicle did not stall. In the very few incidents where the vehicle did stall, most vehicles could be restarted.

(4) Only a small percentage of the complainants cited that they smelled gas or a slight burning smell when the incident occurred.

(5) In all but a very few incidents, vehicle damage was limited to the engine. In one incident, the complaint reported that the fuel rail was damaged and replaced after one of the spark plugs ejected from the engine; however, the complainant reported that the damage did not result in any type of fuel leak

or fire. In another incident, the only incident where a fire was alleged, the complainant reported that no fluid leak was observed, but that a fire resulted after the spark plug had ejected from the engine and he had restarted the vehicle and driven to another location. None of the complainants reported any damage to the vehicle hood.

(6) Only two complainants reported that they observed what appeared to be some drops of fuel coming from the cylinder where the spark plug had failed or on the spark plug itself; however, each of these complainants reported that there was no smoke or flames as a result of his incident.

In addition to its complaint analysis, ODI also examined a subject vehicle containing the alleged defect and observed the following:

(1) One of the spark plugs was detached from the cylinder threads.

(2) The bracket securing the ignition coil and spark plug assembly was broken and when the engine was running, the ignition coil, which was still attached to the engine via its wire harness, would move up and down within the cylinder.

(3) When the engine was running a loud popping or clicking noise was heard.

(4) No fluid leaks or fuel rail, smoke or flame damage was observed.

As the petitioner noted and ODI's analysis showed, it is possible for a spark plug to detach from the engine cylinder threads in the subject vehicles. However, ODI's analysis of 474 complaints describing such incidents found only a very few alleged any safety-related consequences. None of these showed any evidence of a serious safety consequence. Given the large population and relatively long exposure time of the subject vehicles, the complaint analysis indicates that the risk to motor vehicle safety from the alleged defect is very low.

In view of the foregoing, it is unlikely that the NHTSA would issue an order for the notification and remedy of the alleged defect as defined by Mr. Donald Ricketts, on behalf of the ''Petitioners,'' at the conclusion of the investigation requested in the petition. Therefore, in view of the need to allocate and prioritize the NHTSA's limited resources to best accomplish the agency's safety mission, the petition is denied.

**Authority:** 49 U.S.C. 30162(d); delegations of authority at CFR 1.50 and 501.8.

Issued on: December 22, 2005.

**Daniel Smith,**

*Associate Administrator for Enforcement.*

[FR Doc. E5–8072 Filed 12–28–05; 8:45 am]

BILLING CODE 4910–59–P

## DEPARTMENT OF TRANSPORTATION

### National Highway Traffic Safety Administration

**[Docket No. NHTSA–2005–23391]**

### Notice of Receipt of Petition for Decision That Nonconforming 2006 Smart Car Passion, Pulse, and Pure (Coupe and Cabriolet) Passenger Cars Manufactured Prior to September 1, 2006 Are Eligible for Importation

**AGENCY:** National Highway Traffic Safety Administration, DOT.

**ACTION:** Notice of receipt of petition for decision that nonconforming 2006 Smart Car Passion, Pulse, and Pure (Coupe and Cabriolet) passenger cars manufactured prior to September 1, 2006, are eligible for importation.

**SUMMARY:** This document announces receipt by the National Highway Traffic Safety Administration (NHTSA) of a petition for a decision that 2006 Smart Car Passion, Pulse, and Pure (Coupe and Cabriolet) passenger cars, manufactured prior to September 1, 2006, that were not originally manufactured to comply with all applicable Federal motor vehicle safety standards (FMVSS) are eligible for importation into the United States because they have safety features that comply with, or are capable of being altered to comply with, all such standards.

**DATES:** The closing date for comments on the petition is January 30, 2006.

**ADDRESSES:** Comments should refer to the docket number and notice number, and be submitted to: Docket Management, Room PL–401, 400 Seventh St., SW., Washington, DC 20590. [Docket hours are from 9 a.m. to 5 p.m.]. Anyone is able to search the electronic form of all comments received into any of our dockets by the name of the individual submitting the comment (or signing the comment, if submitted on behalf of an association, business, labor union, etc.). You may review DOT's complete Privacy Act Statement in the **Federal Register** published on April 11, 2000 (Volume 65, Number 70; Pages 19477–78) or you may visit *http://dms.dot.gov.*

**FOR FURTHER INFORMATION CONTACT:** Coleman Sachs, Office of Vehicle Safety Compliance, NHTSA (202–366–3151).

**SUPPLEMENTARY INFORMATION:**

**Background**

Under 49 U.S.C. 30141(a)(1)(A), a motor vehicle that was not originally manufactured to conform to all applicable FMVSS shall be refused admission into the United States unless NHTSA has decided that the motor vehicle is substantially similar to a motor vehicle originally manufactured for importation into and sale in the United States, certified under 49 U.S.C. 30115, and of the same model year as the model of the motor vehicle to be compared, and is capable of being readily altered to conform to all applicable FMVSS. When there is no substantially similar U.S.-certified counterpart, a nonconforming motor vehicle shall be refused admission into the United States unless NHTSA decides under 49 U.S.C. 30141(a)(1)(B), that the motor vehicle has safety features that comply with, or are capable of being altered to comply with, all applicable FMVSS based on destructive test data or such other evidence NHTSA decides to be adequate.

Petitions for eligibility decisions may be submitted by either manufacturers or importers who have registered with NHTSA pursuant to 49 CFR Part 592. As specified in 49 CFR 593.7, NHTSA publishes notice in the **Federal Register** of each petition that it receives, and affords interested persons an opportunity to comment on the petition. At the close of the comment period, NHTSA decides, on the basis of the petition and any comments that it has received, whether the vehicle is eligible for importation. The agency then publishes this decision in the **Federal Register**.

G&K Automotive Conversion, Inc. of Santa Ana, California (''G&K'') (Registered Importer 90–007) has petitioned NHTSA to decide whether nonconforming 2006 Smart Car Passion, Pulse, and Pure (Coupe and Cabriolet) passenger cars manufactured prior to September 1, 2006, are eligible for importation into the United States. In its petition, G&K noted that NHTSA has granted import eligibility to 2002–2004 and 2005 Smart Car Passion, Pulse, and Pure (Coupe and Cabriolet) passenger cars that G&K claims are identical to the 2006 Smart Car Passion, Pulse, and Pure (Coupe and Cabriolet) passenger cars that are the subject of this petition. In its petitions for the 2002–2004 and 2005 vehicles, the petitioner claimed that the vehicles were capable of being altered to comply with all applicable FMVSS (see NHTSA Docket Nos. NHTSA–2003–1401 and NHTSA–2005–21334). Because those vehicles were not

manufactured for importation into, and sale in, the United States, and were not certified by their original manufacturer (Daimler Benz), as conforming to all applicable FMVSS, they cannot be categorized as ''substantially similar'' to the 2006 version for purposes of establishing import eligibility under 49 U.S.C. 30141(a)(1)(A). However, the petitioner seeks to rely on the data, views and arguments submitted as part of the 2002–2004 petition; proof of conformity information that the petitioner submitted for the first vehicle it conformed under the 2002–2004 vehicle eligibility decision; and upon the contention that the 2006 model vehicles differ from the 2002–2004 and 2005 models only in that they were manufactured as 2006 model vehicles.

G&K contends that nonconforming 2006 Smart Car Passion, Pulse, and Pure (Coupe and Cabriolet) passenger cars, manufactured prior to September 1, 2006, are eligible for importation under 49 U.S.C. 30141(a)(1)(B) because they have safety features that comply with, or are capable of being altered to comply with, all applicable FMVSS.

Specifically, the petitioner claims that 2006 Smart Car Passion, Pulse, and Pure (Coupe and Cabriolet) passenger cars have safety features that comply with Standard Nos. 103 *Defrosting and Defogging Systems,* 104 *Windshield Wiping and Washing Systems,* 106 *Brake Hoses,* 109 *New Pneumatic Tires,* 116 *Brake Fluid,* 118 *Power Window Systems,* 124 *Accelerator Control Systems,* 135 *Passenger Car Brake Systems,* 202 *Head Restraints,* 204 *Steering Control Rearward Displacement,* 205 *Glazing Materials,* 206 *Door Locks and Door Retention Components*, 207 *Seating Systems,* 210 *Seat Belt Assembly Anchorages,* 212 *Windshield Retention,* 216 *Roof Crush Resistance,* and 219 *Windshield Zone Intrusion.*

Petitioner further contends that the vehicles are capable of being altered to meet the following standards, in the manner indicated:

Standard No. 101 *Controls and Displays:* (a) Inscription of the word ''Brake'' and a seat belt warning symbol on the dash; and (b) modification of the speedometer to read in miles per hour.

Standard No. 102 *Transmission Shift Lever Sequence:* Inscription of shift sequence markings on the instrument cluster.

Standard No. 108 *Lamps, Reflective Devices and Associated Equipment:* (a) Replacement or modification of the headlamps; (b) Installation of side markers; and (c) installation of turn signal lamps. The petition does not describe the headlamp modifications. G&K is claiming confidentiality with respect to some of these modifications.

Standard No. 110 *Tire Selection and Rims:* Installation of a tire information placard.

Standard No. 111 *Rearview Mirror:* Inscription of the required warning statement on the face of the passenger side rearview mirror.

Standard No. 114 *Theft Protection:* Modification of the key locking system and installation of a supplemental key warning buzzer system to meet the requirements of this standard. The petition does not describe these modifications. G&K is claiming confidentiality with respect to these modifications.

Standard No. 201 *Occupant Protection in Interior Impact:* Replacement of interior components with components fabricated by, and available only through, G&K. The petition does not describe these components or their manner of installation. G&K is claiming confidentiality with respect to these modifications.

Standard No. 208 *Occupant Crash Protection:* Installation of supplemental wiring and replacement of the driver's seat belt buckle assembly to comply with the seat belt warning requirements of this standard.

Standard No. 209 *Seat Belt Assemblies:* Replacement of the driver's seat belt buckle assembly with one that conforms to the requirements of Standards No. 208 and 209.

Standard No. 214 *Side Impact Protection:* Modification of the vehicles through the installation of components available only from G&K. The petition does not describe these modifications. G&K is claiming confidentiality with respect to these modifications.

Standard No. 225 *Child Restraint Anchorage Systems:* Installation of a tether anchorage behind the passenger seat on coupe models.

Standard No. 301 *Fuel System Integrity:* Modification of the vehicles' fuel system through the installation of three components and associated attachment hardware available only from G&K. The petition does not describe these modifications. G&K is claiming confidentiality with respect to these modifications.

Standard No. 302 *Flammability of Interior Materials:* Treatment of interior materials and components covered by the standard. G&K is claiming confidentiality with respect to these modifications.

The petitioner states that a vehicle identification number plate must be affixed to the vehicles to meet the requirements of 49 CFR Part 565. The petitioner further states that a certification label must be affixed to the driver's doorjamb to meet the requirements of 49 CFR Part 567.

Additionally, petitioner states components available only from G&K will be installed on the vehicle to comply with the Bumper Standard found in 49 CFR Part 581. The petition does not describe these modifications. G&K is claiming confidentiality with respect to these modifications.

Interested persons are invited to submit comments on the petition described above. Comments should refer to the docket number and be submitted to: Docket Management, Room PL–401, 400 Seventh St., SW., Washington, DC 20590. [Docket hours are from 9 a.m. to 5 p.m.]. It is requested but not required that 10 copies be submitted.

All comments received before the close of business on the closing date indicated above will be considered, and will be available for examination in the docket at the above address both before and after that date. To the extent possible, comments filed after the closing date will also be considered. Notice of final action on the petition will be published in the **Federal Register** pursuant to the authority indicated below.

**Authority:** 49 U.S.C. 30141(a)(1)(B) and (b)(1); 49 CFR 593.8; delegations of authority at 49 CFR 1.50 and 501.8.

**Claude H. Harris,**

*Director, Office of Vehicle, Safety Compliance.*

[FR Doc. E5–8089 Filed 12–28–05; 8:45 am]

**BILLING CODE 4910–59–P**

---

## DEPARTMENT OF TRANSPORTATION

### National Highway Traffic Safety Administration

**[Docket No. NHTSA–2005–23434]**

### Notice of Receipt of Petition for Decision that Nonconforming 2005 Heku 750kg Boat Trailers Are Eligible for Importation

**AGENCY:** National Highway Traffic Safety Administration, DOT.

**ACTION:** Notice of receipt of petition for decision that nonconforming 2005 Heku 750kg boat trailers are eligible for importation.

**SUMMARY:** This document announces receipt by the National Highway Traffic Safety Administration (NHTSA) of a petition for a decision that 2005 Heku 750kg boat trailers that were not originally manufactured to comply with all applicable Federal motor vehicle

safety standards (FMVSS) are eligible for importation into the United States because they have safety features that comply with, or are capable of being altered to comply with, all such standards.

**DATES:** The closing date for comments on the petition is January 30, 2006.

**ADDRESSES:** Comments should refer to the docket number and notice number, and be submitted to: Docket Management, Room PL–401, 400 Seventh St., SW., Washington, DC 20590. [Docket hours are from 9 am to 5 pm]. Anyone is able to search the electronic form of all comments received into any of our dockets by the name of the individual submitting the comment (or signing the comment, if submitted on behalf of an association, business, labor union, etc.). You may review DOT's complete Privacy Act Statement in the **Federal Register** published on April 11, 2000 (Volume 65, Number 70; Pages 19477–78) or you may visit *http://dms.dot.gov.*

**FOR FURTHER INFORMATION CONTACT:** Coleman Sachs, Office of Vehicle Safety Compliance, NHTSA (202–366–3151).

**SUPPLEMENTARY INFORMATION:**

## Background

Under 49 U.S.C. 30141(a)(1)(B), a motor vehicle that was not originally manufactured to conform to all applicable FMVSS, and has no substantially similar U.S.-certified counterpart, shall be refused admission into the United States unless NHTSA has decided that the motor vehicle has safety features that comply with, or are capable of being altered to comply with, all applicable FMVSS based on destructive test data or such other evidence as NHTSA decides to be adequate.

Petitions for eligibility decisions may be submitted by either manufacturers or importers who have registered with NHTSA pursuant to 49 CFR Part 592. As specified in 49 CFR 593.7, NHTSA publishes notice in the **Federal Register** of each petition that it receives, and affords interested persons an opportunity to comment on the petition. At the close of the comment period, NHTSA decides, on the basis of the petition and any comments that it has received, whether the vehicle is eligible for importation. The agency then publishes this decision in the **Federal Register**.

Gifford Bobcat Sales of Millville, New Jersey (''GBS'') (Registered Importer 04–333) has petitioned NHTSA to decide whether 2005 Heku 750kg boat trailers that were not originally manufactured to conform to all applicable FMVSS are eligible for importation into the United States. GBS contends that these vehicles are eligible for importation under 49 U.S.C. 30141(a)(1)(B) because they have safety features that comply with, or are capable of being altered to comply with, all applicable Federal motor vehicle safety standards. GBS submitted information with its petition intended to demonstrate that 2005 Heku 750kg boat trailers, as originally manufactured, comply with one applicable FMVSS and are capable of being modified to comply with all other applicable standards to which they were not originally manufactured to conform.

Specifically, the petitioner claims that 2005 Heku 750kg boat trailers have safety features that comply with Standard No. 119 *New Pneumatic Tires for Vehicles Other than Passenger Cars.*

Petitioner also contends that the vehicles are capable of being altered to meet the following standards, in the manner indicated:

Standard No. 108 *Lamps, Reflective Devices and Associated Equipment:* installation of reflective devices.

Standard No. 120 *Tire Selection and Rims for Motor Vehicles Other than Passenger Cars:* installation of a tire information placard.

The agency notes that the subject trailers are not equipped with braking systems. As a consequence, there is no need for the petition to discuss the vehicle's compliance with any of the brake standards that apply to trailers that are so equipped.

Interested persons are invited to submit comments on the petition described above. Comments should refer to the docket number and be submitted to: Docket Management, Room PL–401, 400 Seventh St., SW, Washington, DC 20590. [Docket hours are from 9 am to 5 pm]. It is requested but not required that 10 copies be submitted.

All comments received before the close of business on the closing date indicated above will be considered, and will be available for examination in the docket at the above address both before and after that date. To the extent possible, comments filed after the closing date will also be considered. Notice of final action on the petition will be published in the **Federal Register** pursuant to the authority indicated below.

**Authority:** 49 U.S.C. 30141(a)(1)(A) and (b)(1); 49 CFR 593.8; delegations of authority at 49 CFR 1.50 and 501.8.

**Claude H. Harris,**

*Director, Office of Vehicle Safety Compliance.*

[FR Doc. E5–8086 Filed 12–28–05; 8:45 am]

BILLING CODE 4910–59–P

## DEPARTMENT OF TRANSPORTATION

### Pipeline and Hazardous Materials Safety Administration

**[Docket: PHMSA–00–7666]**

### Request for Public Comments and Office of Management and Budget (OMB) Approval of an Existing Information Collection (2137–0610)

**AGENCY:** Pipeline and Hazardous Materials Safety Administration (PHMSA), DOT.

**SUMMARY:** This notice requests public participation in the Office of Management and Budget (OMB) approval process regarding the renewal of an existing PHMSA collection of information for Pipeline Integrity Management in High Consequence Areas (Gas Transmission Pipeline Operators). PHMSA is requesting OMB approval for renewal of this information collection under the Paperwork Reduction Act of 1995. With this notice, PHMSA invites the public to submit comments over the next 60 days on ways to minimize the burden associated with collection of information related to pipeline integrity management in high consequence areas for natural gas transmission pipeline operators.

**DATES:** Comments must be submitted on or before February 27, 2006.

**ADDRESSES:** Comments should reference Docket No. PHMSA–00–7666 and may be submitted in the following ways:

- DOT Web site: *http://dms.dot.gov.* To submit comments on the DOT electronic docket site, click ''Comment/Submissions,'' click ''Continue,'' fill in the requested information, click ''Continue,'' enter your comment, then click ''Submit.''
- *Fax:* 1–202–493–2251.
- *Mail:* Docket Management System: U.S. Department of Transportation, 400 Seventh Street, SW., Nassif Building, Room PL–401, Washington, DC 20590–0001.
- *Hand Delivery:* DOT Docket Management System; Room PL–401 on the plaza level of the Nassif Building, 400 Seventh Street, SW., Washington, DC between 9 a.m. and 5 p.m., Monday through Friday, except Federal holidays.
- *E-Gov Web site: http://www.Regulations.gov.* This site allows the public to enter comments on any **Federal Register** notice issued by any agency.

*Instructions:* You should identify the docket number, PHMSA–00–7666, at the beginning of your comments. If you submit your comments by mail, you should submit two copies. If you wish to receive confirmation that PHMSA

received your comments, you should include a self-addressed stamped postcard. Internet users may submit comments at *http://www.regulations.gov*, and may access all comments received by DOT at *http://dms.dot.gov* by performing a simple search for the docket number. Note: All comments will be posted without changes or edits to *http://dms.dot.gov* including any personal information provided.

**Privacy Act Statement**

Anyone may search the electronic form of all comments received for any of our dockets. You may review DOT's complete Privacy Act Statement in the **Federal Register** published on April 11, 2000 (65 FR 19477) or you may visit *http://dms.dot.gov*.

**FOR FURTHER INFORMATION CONTACT:** William Fuentevilla at (202) 366–6199, or by e-mail at *William.Fuentevilla@dot.gov*.

**SUPPLEMENTARY INFORMATION:** Comments are invited on whether the proposed collection of information is necessary for the proper performance of the functions of the Department, including whether the information will have practical utility; the accuracy of the Department's estimate of the burden of the proposed information collections; ways to enhance the quality, utility, and clarity of the information to be collected; and ways to minimize the burden of the collection of information on respondents, including the use of automated collection techniques or other forms of information technology.

This information collection request pertains to gas transmission operators regulated under 49 CFR Part 192. The Gas Transmission Integrity Management rule became effective February 14, 2004. The regulation improves pipeline safety through (1) accelerating the integrity assessment of pipelines in high consequence areas, (2) improving integrity management systems within companies, (3) improving the government's role in reviewing the adequacy of integrity programs and plans, and (4) providing increased public assurance in pipeline safety.

This information collection requires operators of gas transmission pipelines in high consequence areas to submit to PHMSA a written integrity management program and records showing compliance with 49 CFR Part 192, Subpart O. Operators must maintain this record for the life of the pipeline and PHMSA or State regulators may review it during inspections. The regulation requires that each operator submit the four overall performance measures to PHMSA semi-annually. This information collection supports the DOT strategic goal of safety by reducing the number of incidents in natural gas transmission pipelines.

As used in this notice, ''information collection'' includes all work related to preparing and disseminating information related to this recordkeeping requirement including completing paperwork, gathering information, and conducting telephone calls.

*Type of Information Collection Request:* Renewal of Existing Collection.

*Title of Information Collection:* Pipeline Integrity Management in High Consequence Areas (Gas Transmission Pipeline Operators).

*Respondents:* 721.

*Estimated Total Annual Burden on Respondents:* 1,030,309 hours.

Issued in Washington, DC, on December 21, 2005.

**Florence L. Hamn,**

*Director of Regulations, Office of Pipeline Safety.*

[FR Doc. 05–24632 Filed 12–28–05; 8:45 am]

BILLING CODE 4910–60–P

---

## DEPARTMENT OF TRANSPORTATION

### Surface Transportation Board

**[STB Finance Docket No. 34785]**

### Reading Blue Mountain and Northern Railroad Company—Operation Exemption—Locust Valley Line

Reading Blue Mountain and Northern Railroad Company (RBMN), a Class III rail carrier, has filed a verified notice of exemption under 49 CFR 1150.41 to operate a 5-mile line of railroad owned by Locust Valley Coal Company d/b/a Locust Valley Line (Locust Valley).[1] The rail line extends between milepost 0.0, at Laurel Jct. (also known as Morea Jct.), in Delano Township, and milepost 5.5 beyond Newton Jct., just south of Mahanoy City, Schuylkill County, PA. RBMN will operate over the rail line pursuant to an operating agreement with Locust Valley.[2]

RBMN certifies that its projected annual revenues as a result of this transaction will not result in RBMN becoming a Class II or Class I rail carrier. In addition, RBMN states that its current annual revenues exceed $5 million. This triggers the 60-day advance labor notice requirement at 49 CFR 1150.42(e). RBMN has requested a waiver of that requirement. The waiver request will be addressed by the Board in a separate decision in this proceeding.

As a result, the earliest this transaction will be able to be consummated will be either 60 days after RBMN certifies that it has satisfied the requirements of section 1150.42(e) or the effective date of a Board decision granting the requested waiver of the requirements of that provision.

If the notice contains false or misleading information, the exemption is void *ab initio.* Petitions to revoke the exemption under 49 U.S.C. 10502(d) may be filed at any time. The filing of a petition to revoke will not automatically stay the transaction.

An original and 10 copies of all pleadings, referring to STB Finance Docket No. 34785, must be filed with the Surface Transportation Board, 1925 K Street, NW., Washington, DC 20423–0001. In addition, one copy of each pleading must be served on Eric M. Hocky, Esquire, Gollatz, Griffin & Ewing, P.C., Four Penn Center, Suite 200, 1600 John F. Kennedy Blvd., Philadelphia, PA 19103–2808.

Board decisions and notices are available on our Web site at ''*http://www.stb.dot.gov.*''

Decided: December 21, 2005.

By the Board, David M. Konschnik, Director, Office of Proceedings.

**Vernon A. Williams,**

*Secretary.*

[FR Doc. 05–24513 Filed 12–28–05; 8:45 am]

BILLING CODE 4915–01–P

---

[1] Locust Valley was granted an exemption to acquire the line in *Locust Valley Coal Company :d/b/a Locust Valley Line—Acquisition Exemption—Rail Lines in Schuylkill County, PA,* STB Finance Docket No. 34642 (STB served Jan. 21, 2005).

[2] RBMN states that the line is currently out of service, but that it previously operated over the northern mile of the line ''as a spur'' to serve a single customer.

---

## DEPARTMENT OF TRANSPORTATION

### Surface Transportation Board

**[STB Finance Docket No. 34780][1]**

### Northern Plains Railroad, Inc.—Operation Exemption—Rail Line of Mohall Central Railroad, Inc.

Northern Plains Railroad, Inc. (NPR), a Class III rail carrier, has filed a verified notice of exemption under 49 CFR 1150.41 to operate approximately 69.15 miles of railroad owned by Mohall Central Railroad, Inc. (MCR), between

[1] A concurrently filed verified notice of exemption in STB Finance Docket No. 34781, *Mohall Central Railroad, Inc. and Gregg Haug—Continuance in Control Exemption* was withdrawn on December 22, 2005.

milepost 72.9 at Sarles, ND, and milepost 3.75 near Lakota, ND.[2]

NPR certifies that its projected annual revenues as a result of the transaction will not exceed those of a Class III rail carrier and will not exceed $5 million. The transaction was scheduled to be consummated no earlier than December 6, 2005 (7 days after the exemption was filed).

If the verified notice contains false or misleading information, the exemption is void *ab initio*. Petitions to revoke the exemption under 49 U.S.C. 10502(d) may be filed at any time. The filing of a petition to revoke will not automatically stay the transaction.

An original and 10 copies of all pleadings, referring to STB Finance Docket No. 34780, must be filed with the Surface Transportation Board, 1925 K Street, NW., Washington, DC 20423–0001. In addition, a copy of each pleading must be served on Mark S. Radke, 220 South Sixth Street, Suite 2200, Minneapolis, MN 55402.

Board decisions and notices are available on our Web site at ''*http://www.stb.dot.gov*.''

Decided: December 22, 2005.

By the Board, David M. Konschnik, Director, Office of Proceedings.

**Vernon A. Williams,**

*Secretary.*

[FR Doc. E5–8087 Filed 12–28–05; 8:45 am]

**BILLING CODE 4915–01–P**

[2] MCR was authorized to acquire the line of railroad from BNSF Railway Company in STB Finance Docket No. 34759, *Mohall Central Railroad, Inc.—Acquisition and Operation Exemption—Rail Line of BNSF Railway Company* (STB served Oct. 25, 2005).

## DEPARTMENT OF THE TREASURY

### Office of the Comptroller of the Currency

**[Docket No. 05–21]**

## FEDERAL RESERVE SYSTEM

**[Docket No. OP–1246]**

## FEDERAL DEPOSIT INSURANCE CORPORATION

## DEPARTMENT OF THE TREASURY

### Office of Thrift Supervision

**[No. 2005–56]**

## NATIONAL CREDIT UNION ADMINISTRATION

### Interagency Guidance on Nontraditional Mortgage Products

**AGENCIES:** Office of the Comptroller of the Currency, Treasury (OCC); Board of Governors of the Federal Reserve System (Board); Federal Deposit Insurance Corporation (FDIC); Office of Thrift Supervision, Treasury (OTS); and National Credit Union Administration (NCUA).

**ACTION:** Proposed guidance with request for comment.

**SUMMARY:** The OCC, Board, FDIC, OTS, and NCUA (the Agencies), request comment on this proposed Interagency Guidance on Nontraditional Mortgage Products (Guidance). The Agencies expect institutions to effectively assess and manage the risks associated with their credit activities, including those associated with nontraditional mortgage loan products. Institutions should use this guidance in their efforts to ensure that their risk management and consumer protection practices adequately address these risks.

**DATES:** Comments must be submitted on or before February 27, 2006.

**ADDRESSES:** The Agencies will jointly review all of the comments submitted. Therefore, interested parties may send comments to any of the Agencies and need not send comments (or copies) to all of the Agencies. Please consider submitting your comments by e-mail or fax since paper mail in the Washington area and at the Agencies is subject to delay. Interested parties are invited to submit comments to:

*OCC:* You should include ''OCC'' and Docket Number 05–21 in your comment. You may submit your comment by any of the following methods:

- *Federal eRulemaking Portal: http://www.regulations.gov*. Follow the instructions for submitting comments.
- *OCC Web site: http://www.occ.treas.gov*. Click on ''Contact the OCC,'' scroll down and click on ''Comments on Proposed Regulations.''
- *E-Mail Address: regs.comments@occ.treas.gov.*
- *Fax:* (202) 874–4448.
- Mail: Office of the Comptroller of the Currency, 250 E Street, SW., Mail Stop 1–5, Washington, DC 20219.
- *Hand Delivery/Courier:* 250 E Street, SW., Attn: Public Information Room, Mail Stop 1–5, Washington, DC 20219.

*Instructions:* All submissions received must include the agency name (OCC) and docket number for this notice. In general, the OCC will enter all comments received into the docket without change, including any business or personal information that you provide.

You may review comments and other related materials by any of the following methods:

- *Viewing Comments Personally:* You may personally inspect and photocopy comments at the OCC's Public Information Room, 250 E Street, SW., Washington, DC. You can make an appointment to inspect comments by calling (202) 874–5043.
- *Viewing Comments Electronically:* You may request that we send you an electronic copy of comments via e-mail or mail you a CD–ROM containing electronic copies by contacting the OCC at *regs.comments@occ.treas.gov.*
- *Docket Information:* You may also request available background documents and project summaries using the methods described above.

*Board:* You may submit comments, identified by Docket No. OP–1246, by any of the following methods:

- *Agency Web site: http://www.federalreserve.gov.* Follow the instructions for submitting comments at *http://www.federalreserve.gov/generalinfo/foia/ProposedRegs.cfm.*
- *Federal eRulemaking Portal: http://www.regulations.gov.* Follow the instructions for submitting comments.
- *E-mail: regs.comments@federalreserve.gov.* Include the docket number in the subject line of the message.
- *Fax:* 202/452–3819 or 202/452–3102.
- *Mail:* Jennifer J. Johnson, Secretary, Board of Governors of the Federal Reserve System, 20th Street and Constitution Avenue, NW., Washington, DC 20551.

All public comments are available from the Board's Web site at *www.federalreserve.gov/generalinfo/foia/ProposedRegs.cfm* as submitted, unless modified for technical reasons.

Accordingly, your comments will not be edited to remove any identifying or contact information. Public comments may also be viewed in electronic or paper form in Room MP–500 of the Board's Martin Building (20th and C Streets, NW.) between 9 a.m. and 5 p.m. on weekdays.

*FDIC:* You may submit comments by any of the following methods:

- *Agency Web site: http://www.fdic.gov/regulations/laws/federal/propose.html.* Follow the instructions for submitting comments on the Agency Web site.
- *E-Mail: Comments@FDIC.gov.*
- *Mail:* Robert E. Feldman, Executive Secretary, Attention: Comments, Federal Deposit Insurance Corporation, 550 17th Street, NW., Washington, DC 20429.
- *Hand Delivery/Courier:* Guard station at the rear of the 550 17th Street Building (located on F Street) on business days between 7 a.m. and 5 p.m.

*Instructions:* All submissions received must include the agency name. All comments received will be posted without change to *http://www.fdic.gov/regulations/laws/federal/propose.html* including any personal information provided.

*OTS:* You may submit comments, identified by docket number 2005–56, by any of the following methods:

- *Federal eRulemaking Portal: http://www.regulations.gov.* Follow the instructions for submitting comments.
- *E-mail address: regs.comments@ots.treas.gov.* Please include docket number 2005–56 in the subject line of the message and include your name and telephone number in the message.
- *Fax:* (202) 906–6518.
- *Mail:* Regulation Comments, Chief Counsel's Office, Office of Thrift Supervision, 1700 G Street, NW., Washington, DC 20552, Attention: No. 2005–56.
- *Hand Delivery/Courier:* Guard's Desk, East Lobby Entrance, 1700 G Street, NW., from 9 a.m. to 4 p.m. on business days. Address envelope as follows: Attention: Regulation Comments, Chief Counsel's Office, Attention: No. 2005–56.

*Instructions:* All submissions received must include the agency name and docket number for this proposed Guidance. All comments received will be posted without change to the OTS Internet site at *http://www.ots.treas.gov/pagehtml.cfm?catNumber=67&an=1*, including any personal information provided.

*Docket:* For access to the docket to read background documents or comments received, go to *http://www.ots.treas.gov/pagehtml.cfm?catNumber=67&an=1.* In addition, you may inspect comments at the OTS's Public Reading Room, 1700 G Street, NW., by appointment. To make an appointment for access, call (202) 906–5922, send an e-mail to *public.info@ots.treas.gov*, or send a facsimile transmission to (202) 906–7755. (Prior notice identifying the materials you will be requesting will assist us in serving you.) We schedule appointments on business days between 10 a.m. and 4 p.m. In most cases, appointments will be available the next business day following the date we receive a request.

*NCUA:* You may submit comments by any of the following methods:

- *Federal eRulemaking Portal: http://www.regulations.gov.* Follow the instructions for submitting comments.
- *NCUA Web site: http://www.ncua.gov/RegulationsOpinionsLaws/proposed_regs/proposed_regs.html.* Follow the instructions for submitting comments.
- *E-mail:* Address to *regcomments@ncua.gov*. Include ''[Your name] Comments on Interagency Guidance on Nontraditional Mortgages'' in the e-mail subject line.
- *Fax:* (703) 518–6319. Use the subject line described above for e-mail.
- *Mail:* Address to Mary Rupp, Secretary of the Board, National Credit Union Administration, 1775 Duke Street, Alexandria, Virginia 22314–3428.
- *Hand Delivery/Courier:* Same as mail address.

**FOR FURTHER INFORMATION CONTACT:**

*OCC:* Gregory Nagel, National Bank Examiner/Credit Risk Specialist, Credit Risk Policy, (202) 874–5170; or Michael S. Bylsma, Director, or Stephen Van Meter, Assistant Director, Community and Consumer Law Division, (202) 874–5750.

*Board:* Brian Valenti, Supervisory Financial Analyst, (202) 452–3575; or Virginia Gibbs, Senior Supervisory Financial Analyst, (202) 452–2521; or Sabeth I. Siddique, Assistant Director, (202) 452–3861, Division of Banking Supervision and Regulation; Minh-Duc T. Le, Senior Attorney, Division of Consumer and Community Affairs, (202) 452–3667; or Andrew Miller, Counsel, Legal Division, (202) 452–3428. For users of Telecommunications Device for the Deaf (''TDD'') only, contact (202) 263–4869.

*FDIC:* James Leitner, Senior Examination Specialist, (202) 898–6790, or April Breslaw, Chief, Compliance Section, (202) 898–6609, Division of Supervision and Consumer Protection; or Ruth R. Amberg, Senior Counsel, (202) 898–3736, or Richard Foley, Counsel, (202) 898–3784, Legal Division.

*OTS:* William Magrini, Senior Project Manager, (202) 906–5744; or Maurice McClung, Program Manager, Market Conduct, Consumer Protection and Specialized Programs, (202) 906–6182; and Richard Bennett, Counsel, Banking and Finance, (202) 906–7409.

*NCUA:* Cory Phariss, Program Officer, Examination and Insurance, (703) 518–6618.

**SUPPLEMENTARY INFORMATION:**

## I. Background

In recent years, consumer demand and secondary market appetite have grown rapidly for mortgage products that allow borrowers to defer payment of principal and, sometimes, interest. These products, often referred to as nontraditional mortgage loans, including ''interest-only'' mortgages and ''payment option'' adjustable-rate mortgages have been available in similar forms for many years. Nontraditional mortgage loans offer payment flexibility and are an effective and beneficial financial management tool for some borrowers. These products allow borrowers to exchange lower payments during an initial period for higher payments during a later amortization period as compared to the level payment structure found in traditional fixed-rate mortgage loans. In addition, institutions are increasingly combining these loans with other practices, such as making simultaneous second-lien mortgages and allowing reduced documentation in evaluating the applicant's creditworthiness. While innovations in mortgage lending can benefit some consumers, these layering practices can present unique risks that institutions must appropriately measure, monitor and control.

The Agencies recognize that many of the risks associated with nontraditional mortgage loans exist in other adjustable-rate mortgage products, but our concern is elevated with nontraditional products due to the lack of principal amortization and potential accumulation of negative amortization. The Agencies are also concerned that these products and practices are being offered to a wider spectrum of borrowers, including some who may not otherwise qualify for traditional fixed-rate or other adjustable-rate mortgage loans, and who may not fully understand the associated risks.

Regulatory experience with nontraditional mortgage lending programs has shown that prudent management of these programs requires increased attention in product

development, underwriting, compliance, and risk management functions. As with all activities, the Agencies expect institutions to effectively assess and manage the risks associated with nontraditional mortgage loan products. The Agencies have developed this proposed Guidance to clarify how institutions can offer these products in a safe and sound manner, and in a way that clearly discloses the potential risks that borrowers may assume. The Agencies will carefully scrutinize institutions' lending programs, including policies and procedures, and risk management processes in this area, recognizing that a number of different, but prudent practices may exist. Remedial action will be requested from institutions that do not adequately measure, monitor, and control risk exposures in loan portfolios. Further, the agencies will seek to consistently implement the guidance.

## II. Principal Elements of the Guidance

Prudent lending practices include the maintenance of sound loan terms and underwriting standards. Institutions should assess current loan terms and underwriting guidelines and implement any necessary changes to ensure prudent practices. In connection with underwriting standards, the proposed Guidance addresses:

- Appropriate borrower repayment analysis, including consideration of comprehensive debt service in the qualification process;
- The potential for collateral-dependent loans, which could arise when a borrower is overly reliant on the sale or refinancing of the property when loan amortization begins;
- Mitigating factors that support the underwriting decision in circumstances involving a combination of nontraditional mortgage loans and reduced documentation;
- Below market introductory interest rates;
- Lending to subprime borrowers; and
- Loans secured by non owner-occupied properties.

The proposed Guidance also describes appropriate portfolio and risk management practices for institutions that offer nontraditional mortgage products. These practices include the development of policies and internal controls that address, among other matters, product attributes, portfolio and concentration limits, third-party originations, and secondary market activities. In connection with risk management practices, the Guidance also proposes that institutions should:

- Maintain performance measures and management reporting systems that provide warning of potential or increasing risks;
- Maintain an allowance for loan and lease losses (ALLL) at a level appropriate for portfolio credit quality and conditions affecting collectibility;
- Maintain capital levels that reflect nontraditional mortgage portfolio characteristics and the effect of stressed economic conditions on collectibility; and
- Apply sound practices in valuing the mortgage servicing rights of nontraditional mortgages.

Finally, the proposed Guidance describes consumer protection concerns that may be raised by nontraditional mortgage loan products, particularly that borrowers may not fully understand the terms of these products. Nontraditional mortgage loan products are more complex than traditional fixed-rate products and adjustable rate products and present greater risks of payment shock and negative amortization. Institutions should ensure that consumers are provided clear and balanced information about the relative benefits and risks of these products, at a time that will help consumers' decision-making processes. The proposed Guidance discusses applicable laws and regulations and then describes recommended practices for communications with and the provision of information to consumers. These recommended practices address promotional materials and product descriptions, information on monthly payment statements, and the avoidance of practices that obscure significant risks to the consumer or raise similar concerns. The proposed Guidance also describes control systems that should be used to ensure that actual practices are consistent with policies and procedures.

When finalized, the Guidance would apply to all banks and their subsidiaries, bank holding companies and their nonbank subsidiaries, savings associations and their subsidiaries, savings and loan holding companies and their subsidiaries, and credit unions.

## III. Request for Comment

Comment is requested on all aspects of the proposed Guidance. Interested commenters are also asked to address specifically the proposed Guidance on comprehensive debt service qualification standards, which provides that the analysis of borrowers' repayment capacity should include an evaluation of their ability to repay the debt by final maturity at the fully indexed rate, assuming a fully amortizing repayment schedule. For products with the potential for negative amortization, the repayment analysis should include the initial loan amount plus any balance increase that may accrue through the negative amortization provision. In this regard, comment is specifically requested on the following:

(1) Should lenders analyze each borrower's capacity to repay the loan under comprehensive debt service qualification standards that assume the borrower makes only minimum payments? What are current underwriting practices and how would they change if such prescriptive guidance is adopted?

(2) What specific circumstances would support the use of the reduced documentation feature commonly referred to as ''stated income'' as being appropriate in underwriting nontraditional mortgage loans? What other forms of reduced documentation would be appropriate in underwriting nontraditional mortgage loans and under what circumstances? Please include specific comment on whether and under what circumstances ''stated income'' and other forms of reduced documentation would be appropriate for subprime borrowers.

(3) Should the Guidance address the consideration of future income in the qualification standards for nontraditional mortgage loans with deferred principal and, sometimes, interest payments? If so, how could this be done on a consistent basis? Also, if future events such as income growth are considered, should other potential events also be considered, such as increases in interest rates for adjustable rate mortgage products?

The text of the proposed Interagency Guidance on Nontraditional Mortgage Products follows:

*Interagency Guidance on Nontraditional Mortgage Products*

Residential mortgage lending has traditionally been a conservatively managed business with low delinquencies and losses and reasonably stable underwriting standards. In the past few years, there has been a growing consumer demand, particularly in high priced real estate markets, for residential mortgage loan products that allow borrowers to defer repayment of principal and, sometimes, interest. These mortgage products, often referred to as nontraditional mortgage loans, include ''interest-only'' mortgages where a borrower pays no loan principal for the first few years of the loan and ''payment option'' adjustable-rate mortgages (ARMs) where a borrower has

flexible payment options with the potential for negative amortization.[1] More recently, nontraditional mortgage loan products are being offered to a wider spectrum of borrowers who may not otherwise qualify for more traditional mortgage loans and may not fully understand the associated risks.

Many of these nontraditional mortgage loans are also being underwritten with less stringent or no income and asset verification requirements (''reduced documentation'') and are increasingly combined with simultaneous second-lien loans.[2] These risk-layering practices, combined with the broader marketing of nontraditional mortgage loans, expose financial institutions to increased risk relative to traditional mortgage loans.

Given the potential for heightened risk levels, management should carefully consider and appropriately mitigate exposures created by these loans. To manage the risks associated with nontraditional mortgage loans, management should:

- Ensure that loan terms and underwriting standards are consistent with prudent lending practices, including consideration of a borrower's repayment capacity;
- Recognize that many nontraditional mortgage loans, particularly when combined with risk-layering features, are untested in a stressed environment and, therefore, warrant strong risk management standards, capital levels commensurate with the risk, and an allowance for loan and lease losses that reflects the collectibility of the portfolio; and
- Ensure that consumers have information to clearly understand loan terms and associated risks prior to making a product choice.

As with all activities, the Office of the Comptroller of the Currency (OCC), the Board of Governors of the Federal Reserve System (Board), the Federal Deposit Insurance Corporation (FDIC), the Office of Thrift Supervision (OTS) and the National Credit Union Administration (NCUA) (collectively, the Agencies) expect institutions to effectively assess and manage the increased risks associated with nontraditional mortgage loan products.[3]

Institutions should use this guidance in their efforts to ensure that their risk management practices adequately address these risks. The Agencies will carefully scrutinize institutions' risk management processes, policies, and procedures in this area. Remedial action will be requested from institutions that do not adequately manage these risks. Further, the Agencies will seek to consistently implement this guidance.

**Loan Terms and Underwriting Standards**

When an institution offers nontraditional mortgage loan products, underwriting standards should address the effect of a substantial payment increase on the borrower's capacity to repay when loan amortization begins. Moreover, the institution's underwriting standards should comply with the agencies' real estate lending standards and appraisal regulations and associated guidelines.[4]

Central to prudent lending is the internal discipline to maintain sound loan terms and underwriting standards despite competitive pressures. Institutions are strongly cautioned against ceding underwriting standards to third parties that have different business objectives, risk tolerances, and core competencies. Loan terms should be based on a disciplined analysis of potential exposures and compensating factors to ensure risk levels remain manageable.

Qualification Standards—Nontraditional mortgage loans can result in significantly higher payment requirements when the loan begins to fully amortize. This increase in monthly mortgage payments, commonly referred to as payment shock, is of particular concern for payment option ARMs where the borrower makes minimum payments that may result in negative amortization. Some institutions manage the potential for excessive negative amortization and payment shock by structuring the initial terms to limit the spread between the introductory interest rate and the fully indexed rate. Nevertheless, an institution's qualifying standards should recognize the potential impact of payment shock, and that nontraditional mortgage loans often are inappropriate for borrowers with high loan-to-value (LTV) ratios, high debt-to-income (DTI) ratios, and low credit scores.

For all nontraditional mortgage loan products, the analysis of borrowers' repayment capacity should include an evaluation of their ability to repay the debt by final maturity at the fully indexed rate,[5] assuming a fully amortizing repayment schedule. In addition, for products that permit negative amortization, the repayment analysis should include the initial loan amount plus any balance increase that may accrue from the negative amortization provision. The amount of the balance increase should be tied to the initial terms of the loan and estimated assuming the borrower makes only minimum payments during the deferral period. Institutions should also consider the potential risks that a borrower may face in refinancing the loan at the time it begins to fully amortize, such as prepayment penalties. These more fully comprehensive debt service calculations should be considered when establishing the institution's qualifying criteria.

Furthermore, the analysis of repayment capacity should avoid over-reliance on credit scores as a substitute for income verification in the underwriting process. As the level of credit risk increases, either from loan features or borrower characteristics, the importance of actual verification of the borrower's income, assets, and outstanding liabilities also increases.

[1] Interest-only and payment option ARMs are variations of conventional ARMs, hybrid ARMs, and fixed rate products. Refer to the Appendix for additional information on interest-only and payment option ARM loans.

[2] Refer to the Appendix for additional information on reduced documentation and simultaneous second-lien loans.

[3] Refer to Interagency Guidelines Establishing Standards for Safety and Soundness. For each Agency, those respective guidelines are addressed in: 12 CFR Part 30 Appendix A (OCC); 12 CFR Part 208 Appendix D–1 (Board); 12 CFR Part 364 Appendix A (FDIC); 12 CFR Part 570 Appendix A (OTS); and 12 U.S.C. 1786 (NCUA).

[4] Refer to 12 CFR Part 34—Real Estate Lending and Appraisals, OCC Bulletin 2005–3—Standards for National Banks' Residential Mortgage Lending, AL 2003–7—Guidelines for Real Estate Lending Policies and AL 2003–9—Independent Appraisal and Evaluation Functions (OCC); 12 CFR 208.51 subpart E and Appendix C and 12 CFR Part 225 subpart G (Board); 12 CFR Part 365 and Appendix A, and 12 CFR Part 323 (FDIC); 12 CFR 560.101 and Appendix and 12 CFR Part 564 (OTS). Also, refer to the 1999 Interagency Guidance on the ''Treatment of High LTV Residential Real Estate Loans'' and the 1994 ''Interagency Appraisal and Evaluation Guidelines.'' Federally Insured Credit Unions should refer to 12 CFR Part 722—Appraisals and NCUA 03–CU–17—Appraisal and Evaluation Functions for Real Estate Related Transactions (NCUA).

[5] The fully indexed rate equals the index rate prevailing at origination plus the margin that will apply after the expiration of an introductory interest rate. The index rate is a published interest rate to which the interest rate on an ARM is tied. Some commonly used indices include the 1-Year Constant Maturity Treasury Rate (CMT), the 6-Month London Interbank Offered Rate (LIBOR), the 11th District Cost of Funds (COFI), and the Moving Treasury Average (MTA), a 12-month moving average of the monthly average yields of U.S. Treasury securities adjusted to a constant maturity of one year. The margin is the number of percentage points a lender adds to the index value to calculate the ARM interest rate at each adjustment period. In different interest rate scenarios, the fully indexed rate for an ARM loan based on a lagging index (e.g., MTA rate) may be significantly different from the rate on a comparable 30-year fixed-rate product. In these cases, a credible market rate should be used to qualify the borrower and determine repayment capacity.

Collateral-Dependent Loans—Institutions should avoid the use of loan terms and underwriting practices that may result in the borrower having to rely on the sale or refinancing of the property once amortization begins. Loans to borrowers who do not demonstrate the capacity to repay, as structured, from sources other than the collateral pledged are generally considered unsafe and unsound. Institutions determined to be originating collateral-dependent mortgage loans, may be subject to criticism, corrective action, and higher capital requirements.

Risk Layering—Nontraditional mortgage loans combined with risk-layering features, such as reduced documentation and/or a simultaneous second-lien loan, pose increased risk. When risks are layered, an institution should compensate for this increased risk with mitigating factors that support the underwriting decision and the borrower's repayment capacity. Mitigating factors might include higher credit scores, lower LTV and DTI ratios, credit enhancements, and mortgage insurance. While higher pricing may seem to address the increased risks associated with risk-layering features, it raises the importance of prudent qualification standards discussed above. Further, institutions should fully consider the effect of these risk-layering features on estimated credit losses when establishing their allowance for loan and lease losses (ALLL).

Reduced Documentation—Institutions are increasingly relying on reduced documentation, particularly unverified income to qualify borrowers for nontraditional mortgage loans. Because these practices essentially substitute assumptions and alternate information for the waived data in analyzing a borrower's repayment capacity and general creditworthiness, they should be used with caution. An institution should consider whether its verification practices are adequate. As the level of credit risk increases, the Agencies expect that an institution will apply more comprehensive verification and documentation procedures to verify a borrower's income and debt reduction capacity.

Use of reduced documentation in the underwriting process should be governed by clear policy guidelines. Reduced documentation, such as stated income, should be accepted only if there are other mitigating factors such as lower LTV and other more conservative underwriting standards.

Simultaneous Second-Lien Loans—Simultaneous second-lien loans result in reduced owner equity and higher credit risk. Historically, as combined loan-to-value ratios rise, defaults rise as well. A delinquent borrower with minimal or no equity in a property may have little incentive to work with the lender to bring the loan current to avoid foreclosure. In addition, second-lien home equity lines of credit (HELOCs) typically increase borrower exposure to increasing interest rates and monthly payment burdens. Loans with minimal owner equity should generally not have a payment structure that allows for delayed or negative amortization.

Introductory Interest Rates—Many institutions offer introductory interest rates that are set well below the fully indexed rate as a marketing tool for payment option ARM products. In developing nontraditional mortgage products, an institution should consider the spread between the introductory rate and the fully indexed rate. Since initial monthly mortgage payments are based on these low introductory rates, there is a greater potential for a borrower to experience negative amortization, increased payment shock, and earlier recasting of the borrower's monthly payments than originally scheduled. In setting introductory rates, institutions should consider ways to minimize the probability of disruptive early recastings and extraordinary payment shock.

Lending to Subprime Borrowers—Mortgage programs that target subprime borrowers through tailored marketing, underwriting standards, and risk selection should follow the applicable interagency guidance on subprime lending.[6] Among other things, the subprime guidance discusses the circumstances under which subprime lending can become predatory or abusive. Additionally, an institution's practice of risk layering for loans to subprime borrowers may significantly increase the risk to both the institution and the borrower. Institutions should pay particular attention to these circumstances, as they design nontraditional mortgage loan products for subprime borrowers.

Non Owner-Occupied Investor Loans—Borrowers financing non owner-occupied investment properties should be qualified on their ability to service the debt over the life of the loan. Loan terms should also reflect an appropriate combined LTV ratio that considers the potential for negative amortization and maintains sufficient borrower equity over the life of the loan. Further, nontraditional mortgages to finance non owner-occupied investor properties should require evidence that the borrower has sufficient cash reserves to service the loan in the near term in the event that the property becomes vacant.[7]

**Portfolio and Risk Management Practices**

Institutions should recognize that nontraditional mortgage loans are untested in a stressed environment and, accordingly, should receive higher levels of monitoring and loss mitigation. Moreover, institutions should ensure that portfolio and risk management practices keep pace with the growth and changing risk profile of their nontraditional mortgage loan portfolios. Active portfolio management is especially important for institutions that project or have already experienced significant growth or concentrations of nontraditional products. Institutions that originate or invest in nontraditional mortgage loans should adopt more robust risk management practices and manage these exposures in a thoughtful, systematic manner by:

- Developing written policies that specify acceptable product attributes, production and portfolio limits, sales and securitization practices, and risk management expectations;
- Designing enhanced performance measures and management reporting that provide early warning for increasing risk;
- Establishing appropriate ALLL levels that consider the credit quality of the portfolio and conditions that affect collectibility; and
- Maintaining capital at levels that reflect portfolio characteristics and the effect of stressed economic conditions on collectibility. Institutions should hold capital commensurate with the risk characteristics of their nontraditional mortgage loan portfolios.

Policies—An institution's policies for nontraditional mortgage lending activity should set forth acceptable levels of risk through its operating practices, accounting procedures, and policy exception tolerances. Policies should reflect appropriate limits on risk layering and should include risk management tools for risk mitigation purposes. Further, an institution should set growth and volume limits by loan type, with special attention for products and product combinations in need of heightened attention due to easing terms or rapid growth.

Concentrations—Concentration limits should be set for loan types, third-party

[6] Interagency Guidance on Subprime Lending, March 1, 1999, and Expanded Guidance for Subprime Lending Programs, January 31, 2001. Federally Insured Credit Unions should refer to 04–CU–12 " Specialized Lending Activities (NCUA).

[7] Federally Insured Credit Unions must comply with 12 CFR Part 723 for loans meeting the definition of member business loans.

originations, geographic area, and property occupancy status, to maintain portfolio diversification. Concentration limits should also be set on key portfolio characteristics such as loans with high combined LTV and DTI ratios, loans with the potential for negative amortization, loans to borrowers with credit scores below established thresholds, and nontraditional mortgage loans with layered risks. The combination of nontraditional mortgage loans with risk-layering features should be regularly analyzed to determine if excessive concentrations or risks exist. Institutions with excessive concentrations or deficient risk management practices will be subject to elevated supervisory attention and potential examiner criticism to ensure timely remedial action. Further, institutions should consider the effect of employee incentive programs that may result in higher concentrations of nontraditional mortgage loans.

Controls—An institution's quality control, compliance, and audit procedures should specifically target those mortgage lending activities exhibiting higher risk. For nontraditional mortgage loan products, an institution should have appropriate controls to monitor compliance and exceptions to underwriting standards. The institution's quality control function should regularly review a sample of reduced documentation loans from all origination channels and a representative sample of underwriters to confirm that policies are being followed. When control systems or operating practices are found deficient, business line managers should be held accountable for correcting deficiencies in a timely manner.

Since many nontraditional mortgage loans permit a borrower to defer principal and, in some cases, interest payments for extended periods, institutions should have strong controls over accruals, customer service and collections. Policy exceptions made by servicing and collections personnel should be carefully monitored to confirm that practices such as re-aging, payment deferrals, and loan modifications are not inadvertently increasing risk. Since payment option ARMs require higher levels of customer support than other mortgage loans, customer service and collections personnel should receive product-specific training on the features and potential customer issues.

Third-Party Originations—Institutions often use third-party channels, such as mortgage brokers or correspondents, to originate nontraditional mortgage loans. When doing so, an institution should have strong approval and control systems to ensure the quality of third-party originations and compliance with all applicable laws and regulations, with particular emphasis on marketing and borrower disclosure practices. Controls over third parties should be designed to ensure that loans made through these channels reflect the standards and practices used by an institution in its direct lending activities.

Monitoring procedures should track the quality of loans by both origination source and key borrower characteristics in order to identify problems, such as early payment defaults, incomplete documentation, and fraud. A strong monitoring process should enable management to determine whether third-party originators are producing quality loans. If appraisal, loan documentation, or credit problems are discovered, the institution should take immediate action, which could include terminating its relationship with the third-party.[8]

Secondary Market Activity—The sophistication of an institution's secondary market risk management practices should be commensurate with the nature and volume of activity. Institutions with significant secondary market reliance should have comprehensive, formal approaches to risk management.[9] This should include consideration of the risks to the institution should demand in the secondary markets dissipate.

While sale of loans to third parties can transfer a portion of the portfolio's credit risk, an institution continues to be exposed to reputation risk that arises when the credit losses on sold loans or securitization transactions exceed expected losses. In order to protect its reputation in the market, an institution may determine that it is necessary to repurchase defaulted mortgages. It should be noted that the repurchase of mortgage loans beyond the selling institution's contractual obligations is, in the Agencies' view, implicit recourse. Under the Agencies' risk-based capital standards, repurchasing mortgage loans from a sold portfolio or from a securitization in this manner would require that risk-based capital be maintained against the entire portfolio or securitization.[10] Further, loans sold to third parties typically carry representations and warranties from the institution that these loans were underwritten properly and all legal requirements were satisfied. Therefore, institutions involved in securitization transactions should consider the potential origination-related risks arising from nontraditional mortgage loans, including the adequacy of disclosures to investors.

Management Information and Reporting—An institution should have the reporting capability to detect changes in the risk profile of its nontraditional mortgage loan portfolio. Reporting systems should allow management to isolate key loan products, risk-layering loan features, and borrower characteristics to allow early identification of performance deterioration. At a minimum, information should be available by loan type (e.g., interest-only mortgage loans and payment option ARMs); the combination of these loans with risk-layering features (e.g., payment option ARM with stated income and interest-only mortgage loans with simultaneous second-lien mortgages); underwriting characteristics (e.g., LTV, DTI, and credit score); and borrower performance (e.g., payment patterns, delinquencies, interest accruals, and negative amortization).

Portfolio volume and performance results should be tracked against expectations, internal lending standards, and policy limits. Volume and performance expectations should be established at the subportfolio and aggregate portfolio levels. Variance analyses should be performed regularly to identify exceptions to policies and prescribed thresholds. Qualitative analysis should be undertaken when actual performance deviates from established policies and thresholds. Variance analysis is critical to the monitoring of the portfolio's risk characteristics and should be an integral part of an institution's forecasting process to establish and adjust risk tolerance levels.

Stress Testing—Institutions should perform sensitivity analysis on key portfolio segments to identify and quantify events that may increase risks in a segment or the entire portfolio. This

[8] Refer to OCC Bulletin 2001–47—Third-Party Relationships and AL 2000–9—Third-Party Risk (OCC). Federally Insured Credit Unions should refer to 01–CU–20 (NCUA), Due Diligence Over Third-Party Service Providers.

[9] Refer to ''Interagency Questions and Answers on Capital Treatment of Recourse, Direct Credit Substitutes, and Residual Interests in Asset Securitizations,'' May 23, 2002; OCC Bulletin 2002–22 (OCC); SR letter 02–16 (Board); Financial Institution Letter (FIL–54–2002) (FDIC); and CEO Letter 163 (OTS). See OCC's Comptroller Handbook for Asset Securitization, November 1997. The Board also addressed risk management and capital adequacy of exposures arising from secondary market credit activities in SR letter 97–21. Federally Insured Credit Unions should refer to 12 CFR Part 702 (NCUA).

[10] Federally Insured Credit Unions should refer to 12 CFR Part 702 for their risk based net worth requirements.

should generally include stress tests on key performance drivers such as interest rates, employment levels, economic growth, housing value fluctuations, and other factors beyond the institution's immediate control. Stress tests typically assume rapid deterioration in one or more factors and attempt to estimate the potential influence on default rates and loss severity. Through stress testing, an institution should be able to identify, monitor and manage risk, as well as develop appropriate and cost-effective loss mitigation strategies. The stress testing results should provide direct feedback in determining underwriting standards, product terms, portfolio concentration limits, and capital levels.

Capital and Allowance for Loan and Lease Losses—Institutions should establish appropriate allowances for the estimated credit losses in their nontraditional mortgage loan portfolios and hold capital commensurate with the risk characteristics of these portfolios. Moreover, institutions should recognize that the limited performance history of these products, particularly in a stressed environment, increases performance uncertainty. As loan terms evolve and underwriting practices ease, this lack of seasoning may warrant higher capital levels.

In establishing an appropriate ALLL and considering the adequacy of capital, institutions should segment their nontraditional mortgage loan portfolios into pools with similar credit risk characteristics. The basic segments typically include collateral and loan characteristics, geographic concentrations, and borrower qualifying attributes. Credit risk segments should also distinguish among loans with differing payment and portfolio characteristics, such as borrowers who habitually make only minimum payments, mortgages with existing balances above original balances due to negative amortization, and mortgages subject to sizable payment shock. The objective is to identify key credit quality indicators that affect collectibility for ALLL measurement purposes and important risk characteristics that influence expected performance so that migration into or out of key segments provides meaningful information about future loss exposure for purposes of determining the level of capital to be maintained.

Further, those institutions with material mortgage banking activities and mortgage servicing assets should apply sound practices in valuing the mortgage servicing rights of nontraditional mortgages in accordance with interagency guidance.[11] This guidance requires institutions to follow generally accepted accounting principles and conservatively treat assumptions used in valuing mortgage-servicing rights.

**Consumer Protection Issues**

While nontraditional mortgage loans provide flexibility for consumers, the Agencies are concerned that consumers may enter into these transactions without fully understanding the product terms. Nontraditional mortgage products have been advertised and promoted based on their near-term monthly payment affordability, and consumers have been encouraged to select nontraditional mortgage products based on the lower monthly payments that such products permit compared with traditional types of mortgages. In addition to apprising consumers of the benefits of nontraditional mortgage products, institutions should ensure that they also appropriately alert consumers to the risks of these products, including the likelihood of increased future payment obligations. Institutions should also ensure that consumers have information that is timely and sufficient for making a sound product selection decision.[12]

Concerns and Objectives—More than traditional ARMs, mortgage products such as payment option ARMs and interest-only mortgages can carry a significant risk of payment shock and negative amortization that may not be fully understood by consumers. For example, consumer payment obligations may increase substantially at the end of an interest-only period or upon the ''recast'' of a payment option ARM. The magnitude of these payment increases may be affected by factors such as the expiration of promotional interest rates, increases in the interest rate index, and negative amortization. Negative amortization also results in lower levels of home equity as compared to a traditional amortizing mortgage product. As a result, it may be more difficult for consumers to refinance these loans. In addition, in the event of a refinancing or a sale of the property, negative amortization may result in the reduction or elimination of home equity, even when the property has appreciated. The concern that consumers may not fully understand these products would be exacerbated by marketing and promotional practices that emphasize potential benefits without also effectively providing complete information about material risks.

In light of these considerations, institutions should ensure that communications with consumers, including advertisements, oral statements, promotional materials, and monthly statements, are consistent with product terms and payment structures. These communications should also provide clear and balanced information about the relative benefits and risks of these products, including the risk of payment shock and the risk of negative amortization. Clear, balanced, and timely communication to consumers of the risks of these products is important to ensuring that consumers have appropriate information at crucial decision-making points, such as when they are shopping for loans or deciding which monthly payment amount to make. Such communication should help minimize potential consumer confusion and complaints, foster good customer relations, and reduce legal and other risks to the institution.

Legal Risks—Institutions that offer nontraditional mortgage products must ensure that they do so in a manner that complies with all applicable laws and regulations. With respect to the disclosures and other information provided to consumers, applicable laws and regulations include the following:

- Truth in Lending Act (TILA) and its implementing regulation, Regulation Z.
- Section 5 of the Federal Trade Commission Act (FTC Act).

TILA and Regulation Z contain rules governing disclosures that institutions must provide for closed-end mortgages in advertisements, with an application,[13] before loan consummation, and when interest rates change. Section 5 of the FTC Act prohibits unfair or deceptive acts or practices.[14]

[11] Refer to the ''Interagency Advisory on Mortgage Banking,'' February 25, 2003, issued by the bank and thrift regulatory agencies. Federally Insured Credit Unions with assets of $10 million or more are reminded they must report and value nontraditional mortgages and related mortgage servicing rights, if any, consistent with generally accepted accounting principles in the Call Reports they file with the NCUA Board.

[12] Institutions also should review the recommendations relating to mortgage lending practices set forth in other sections of this guidance and any other supervisory guidance from their respective primary regulators, including the discussion in the Subprime Lending Guidance referenced in footnote 6 about abusive lending practices.

[13] These program disclosures apply to ARM products and must be provided at the time an application is provided or before the consumer pays a nonrefundable fee, whichever is earlier.

[14] The OCC, the Board, and the FDIC enforce this provision under the FTC Act and section 8 of the FDI Act. Each of these agencies has also issued supervisory guidance to the institutions under their respective jurisdictions concerning unfair or deceptive acts or practices. See OCC Advisory Letter 2002–3—Guidance on Unfair or Deceptive Acts or Practices, March 22, 2002; Joint Board and

Continued

Institutions should also ensure that they comply with fair lending laws and the Real Estate Settlement Procedures Act (RESPA). Other federal laws also apply to these loan products. Moreover, the Agencies note that the sale or securitization of a loan may not affect an institution's potential liability for violations of TILA, RESPA, the FTC Act, or other laws in connection with its origination of the loan. State laws, including laws regarding unfair or deceptive acts or practices, also may be applicable. It is important that institutions have their communications and other acts and practices reviewed by counsel for compliance with all applicable laws. Institutions also should monitor applicable laws and regulations for revisions to ensure that communications continue to be fully compliant.

*Recommended Practices*

Recommended practices for addressing the risks raised by nontraditional mortgage products include the following:

Communications with Consumers—As with all communications with consumers, institutions should present important information in a clear manner and format such that consumers will notice it, can understand it to be material, and will be able to use it in their decision-making processes.[15] Furthermore, when promoting or describing nontraditional mortgage products, institutions should provide consumers with information that will enable them to make informed decisions and to use these products responsibly. Meeting this objective requires appropriate attention to the timing, content, and clarity of information presented to consumers. Thus, institutions should provide consumers with information at a time that will help consumers make product selection and payment decisions. For example, institutions should offer full and fair product descriptions when a consumer is shopping for a mortgage, not just upon the submission of an application or at consummation.

• Promotional materials and descriptions of these products should provide information that enables consumers to prudently consider the costs, terms, features, and risks of these mortgages in their product selection decisions, including information about:

—Payment Shock. Institutions should apprise consumers of potential increases in their payment obligations (e.g., in both dollar and percentage terms), including situations in which interest rates or negative amortization reach a contractual limit. For example, product descriptions could specifically state the maximum monthly payment a consumer would be required to pay under a hypothetical loan example once amortizing payments are required and the interest rate and negative amortization caps have been reached.[16] Information provided to consumers also could clearly describe when structural payment changes will occur (e.g., when introductory rates expire, or when amortizing payments are required), and what the new payment amount would be or how it would be calculated. As applicable, these descriptions could indicate that the new payment amount may be required sooner, and may be even higher than the amount indicated, due to factors such as negative amortization or increases in the interest rate index.

—Negative Amortization. When negative amortization is possible under the terms of the loan, consumers should be apprised of the potential consequences of increasing principal balances and decreasing home equity. For example, product descriptions should include, with sample payment schedules, corresponding examples showing the effect of those payments on the consumer's loan balance and home equity.

—Prepayment Penalties. If the institution may impose a penalty in the event that the consumer prepays the mortgage, consumers should be alerted to this fact, and to the amount of any such penalty.[17]

—Cost of Reduced Documentation Loans. If an institution offers both reduced and full documentation loan programs and there is a pricing premium attached to the reduced documentation program, consumers should be alerted to this fact.

• Monthly statements that are provided to consumers on payment option ARMs should provide information that enables consumers to make responsible payment choices, including information about the consequences of selecting various payment options on the current principal balance. Institutions should present each payment option available, explain each option, and note the impact of each choice. For example, the monthly payment statement should contain an explanation, as applicable, next to the minimum payment amount that this payment would result in an increase to the consumer's outstanding loan balance due to negative amortization. Payment statements also could provide the consumer's current loan balance, what portion of the consumer's previous payment was allocated to principal and to interest, and, if applicable, the amount by which the principal balance increased. Institutions should avoid leading payment option ARM borrowers to select the minimum payment (for example, through the format or content of monthly statements).

• Institutions also should avoid practices that obscure significant risks to the consumer. For example, if an institution advertises or promotes a nontraditional mortgage by emphasizing the comparatively lower initial payments permitted for these loans, the institution also should provide clear and comparably prominent information alerting the consumer, as relevant, that these payment amounts will increase, that a balloon payment may be due, and that the loan balance will not decrease and may even increase due to the deferral of interest and/or principal payments. Similarly, institutions should avoid such practices as promoting payment patterns that are structurally unlikely to occur.[18] Such practices could raise legal and other risks for institutions, as described more fully above.

• Institutions also should avoid such practices as: Unwarranted assurances or

FDIC Guidance on Unfair or Deceptive Acts or Practices by State-Chartered Banks, March 11, 2004. Federally insured credit unions are prohibited from using any advertising or promotional material that is inaccurate, misleading, or deceptive in any way concerning its products, services, or financial condition. 12 CFR 740.2. The OTS also has a regulation that prohibits savings associations from using advertisements or other representations that are inaccurate or misrepresent the services or contracts offered. 12 CFR 563.27. This regulation supplements its authority under the FTC Act.

[15] In this regard, institutions should strive to: (1) Focus on information important to consumer decision making; (2) highlight key information so that it will be noticed; (3) employ a user-friendly and readily navigable format for presenting the information; and (4) use plain language, with concrete and realistic examples. Comparative tables and information describing key features of available loan products, including reduced documentation programs, also may be useful for consumers considering these nontraditional mortgage products and other loan features described in this guidance.

[16] Consumers also should be apprised of other material changes in payment obligations, such as balloon payments.

[17] Federal credit unions are prohibited from imposing prepayment penalties. 12 CFR 701.21(c)(6).

[18] For example, marketing materials for payment option ARMs may promote low predictable payments until the recast date. At the same time, the minimum payments may be so low that negative amortization caps would be reached and higher payment obligations would be triggered before the scheduled recast, even if interest rates remain constant.

predictions about the future direction of interest rates (and, consequently, the borrower's future obligations); inappropriate representations about the ''cash savings'' to be realized from nontraditional mortgage products in comparison with amortizing mortgages; statements suggesting that initial minimum payments in a payment option ARM will cover accrued interest (or principal and interest) charges; and misleading claims that interest rates or payment obligations for these products are ''fixed.''

Control Systems—Institutions also should develop and use strong control systems to ensure that actual practices are consistent with their policies and procedures, for loans that the institution originates internally, those that it originates through mortgage brokers and other third parties, and those that it purchases. Institutions should design control systems to address compliance and fair disclosure concerns as well as the safety and soundness considerations discussed above. Lending personnel should be trained so that they are able to convey information to consumers about product terms and risks in a timely, accurate, and balanced manner. Lending personnel should be monitored through, for example, call monitoring or mystery shopping, to determine whether they are conveying appropriate information. Institutions should review consumer complaints to identify potential compliance, reputation, and other risks. Attention also should be paid to appropriate legal review and to using compensation programs that do not improperly encourage originators to direct consumers to particular products.

*Appendix:* Terms Used in this Document

Interest-only Mortgage Loan—A nontraditional mortgage on which, for a specified number of years (e.g., three or five years), the borrower is required to pay only the interest due on the loan during which time the rate may fluctuate or may be fixed. After the interest-only period, the rate may be fixed or fluctuate based on the prescribed index and payments include both principal and interest.

Payment Option ARM—A nontraditional mortgage that allows the borrower to choose from a number of different payment options. For example, each month, the borrower may choose a minimum payment option based on a ''start'' or introductory interest rate, an interest-only payment option based on the fully indexed interest rate, or a fully amortizing principal and interest payment option based on either a 15-year or 30-year loan term plus any required escrow payments. The minimum payment option can be less than the interest accruing on the loan, resulting in negative amortization. The interest-only option avoids negative amortization but does not provide for principal amortization. After a specified number of years, or if the loan reaches a certain negative amortization cap, the required monthly payment amount is recast to require payments that will fully amortize the outstanding balance over the remaining loan term.

Reduced Documentation—A loan feature that is commonly referred to as ''low doc/no doc,'' ''no income/no asset,'' ''stated income'' or ''stated assets.'' For mortgage loans with this feature, an institution sets reduced or minimal documentation standards to substantiate the borrower's income and assets.

Simultaneous Second-Lien Loan—A lending arrangement where either a closed-end second-lien or a home equity line of credit (HELOC) is originated simultaneously with the first lien mortgage loan, typically in lieu of a higher down payment.

This concludes the text of the proposed Interagency Guidance on Nontraditional Mortgage Products.

Dated: December 19, 2005.

**John C. Dugan,**

*Comptroller of the Currency.*

By order of the Board of Governors of the Federal Reserve System, December 19, 2005.

**Jennifer J. Johnson,**

*Secretary of the Board.*

Dated at Washington, DC, the 19th day of December, 2005.

By order of the Federal Deposit Insurance Corporation.

**Robert E. Feldman,**

*Executive Secretary.*

Dated: December 19, 2005.

By the Office of Thrift Supervision.

**John M. Reich,**

*Director.*

By the National Credit Union Administration on December 20, 2005.

**Rodney E. Hood,**

*Vice Chairman.*

[FR Doc. 05–24562 Filed 12–28–05; 8:45 am]

BILLING CODE 4810–33–P, 6210–01–P, 6714–01–P, 6720–01–P, 7535–01–P

## DEPARTMENT OF THE TREASURY

### Fiscal Service

### Financial Management Service; Proposed Collection of Information: Resolution Authorizing Execution of Depositary, Financial Agency, and Collateral Agreement; and Depositary, Financial Agency, and Collateral Agreement

**AGENCY:** Financial Management Service, Fiscal Service, Treasury.

**ACTION:** Notice and request for comments.

**SUMMARY:** The Financial Management Service, as part of its continuing effort to reduce paperwork and respondent burden, invites the general public and other Federal agencies to take this opportunity to comment on a continuing information collection. By this notice, the Financial Management Service solicits comments concerning forms ''Resolution Authorizing Execution of Depositary, Financial Agency, and Collateral Agreement; and Depositary, Financial Agency, and Collateral Agreement.''

**DATES:** Written comments should be received on or before February 27, 2006.

**ADDRESSES:** Direct all written comments to Financial Management Service, 3700 East West Highway, Records and Information Management Program Staff, Room 135, Hyattsville, Maryland 20782.

**FOR FURTHER INFORMATION CONTACT:** Requests for additional information or copies of the form(s) and instructions should be directed to Mary Bailey, Bank Policy and Oversight Division, 401 14th Street, SW., Room 317, Washington, DC 20227, (202) 874–7055.

**SUPPLEMENTARY INFORMATION:** Pursuant to the Paperwork Reduction Act of 1995, (44 U.S.C. 3506(c)(2)(A)), the Financial Management Service solicits comments on the collection of information described below:

*Title:* Resolution Authorizing Execution of Depositary, Financial Agency, and Collateral Agreement; and Depositary, Financial Agency, and Collateral Agreement.

*OMB Number:* 1510–0067.

*Form Number:* FMS 5902; FMS 5903.

*Abstract:* These forms are used to give authority to financial institutions to become a depositary of the Federal Government. They also execute an agreement from the financial institutions that are authorized to pledge collateral to secure public funds with Federal Reserve Banks or their designees.

*Current Actions:* Extension of currently approved collection.

*Type of Review:* Regular.

*Affected Public:* Business or other for-profit institutions.

*Estimated Number of Respondents:* 15 (2 forms ea.).

*Estimated Time Per Respondent:* 30 minutes (15 minutes ea. form).

*Estimated Total Annual Burden Hours:* 7.

*Comments:* Comments submitted in response to this notice will be summarized and/or included in the request for Office of Management and Budget approval. All comments will become a matter of public record. Comments are invited on: (a) Whether the collection of information is necessary for the proper performance of the functions of the agency, including whether the information shall have practical utility; (b) the accuracy of the agency's estimate of the burden of the collection of information; (c) ways to enhance the quality, utility, and clarity of the information to be collected; (d) ways to minimize the burden of the collection of information on respondents, including through the use of automated collection techniques or other forms of information technology; and (e) estimates of capital or start-up costs and costs of operation, maintenance and purchase of services to provide information.

**Gary Grippo,**

*Assistant Commissioner, Federal Finance.*

[FR Doc. 05–24560 Filed 12–28–05; 8:45 am]

**BILLING CODE 4810–35–M**

---

## DEPARTMENT OF THE TREASURY

### Fiscal Service

### Surety and Reinsuring Companies; Fees

**AGENCY:** Financial Management Service, Fiscal Service, Department of the Treasury.

**ACTION:** Application and Renewal Fees Imposed on Surety Companies and Reinsuring Companies; Increase in Fees Imposed.

**SUMMARY:** Effective December 31, 2005, The Department of the Treasury, Financial Management Service, is increasing the fees it imposes on and collects from surety companies and reinsuring companies.

**FOR FURTHER INFORMATION CONTACT:** Surety Bond Branch at (202) 874–6765.

**SUPPLEMENTARY INFORMATION:** The fees imposed and collected, as referred to in 31 CFR 223.22, cover the costs incurred by the Government for services performed relative to qualifying corporate sureties to write Federal business. These fees are determined in accordance with the Office of Management and Budget Circular A–25, as amended. The change in fees is the result of a thorough analysis of costs associated with the Surety Bond Branch.

The new fee rate schedule is as follows:

(1) Examination of a company's application for a Certificate of Authority as an acceptable surety as an acceptable reinsuring company on Federal bonds—$7,500.

(2) Determination of a company's continued qualification for annual renewal of its Certificate of Authority—$4,400.

(3) Examination of a company's application for recognition as an Admitted Reinsurer (except on excess risks running to the United States)—$2,650.

(4) Determination of a company's continued qualification for annual renewal of its authority as an Admitted Reinsurer—$1,875.

Questions concerning this notice should be directed to the Surety Bond Branch, Financial Accounting and Services Division, Financial Management Service Department of the Treasury, 3700 East West Highway, Room 6F01, Hyattsville, MD 20782, Telephone (202) 874–6850.

Dated: December 22, 2005.

**Wanda J. Rogers,**

*Assistant Commissioner Financial Operations, Financial Management Service.*

[FR Doc. 05–24561 Filed 12–28–05; 8:45 am]

**BILLING CODE 4810–35–M**

---

## DEPARTMENT OF THE TREASURY

### Internal Revenue Service

### Proposed Collection; Comment Request for Revenue Procedure 97–15

**AGENCY:** Internal Revenue Service (IRS), Treasury.

**ACTION:** Notice and request for comments.

**SUMMARY:** The Department of the Treasury, as part of its continuing effort to reduce paperwork and respondent burden, invites the general public and other Federal agencies to take this opportunity to comment on proposed and/or continuing information collections, as required by the Paperwork Reduction Act of 1995, Public Law 104–13 (44 U.S.C. 3506(c)(2)(A)). Currently, the IRS is soliciting comments concerning Revenue Procedure 97–15, section 103—Remedial Payment Closing Agreement Program.

**DATES:** Written comments should be received on or before February 27, 2006 to be assured of consideration.

**ADDRESSES:** Direct all written comments to Glenn Kirkland Internal Revenue Service, room 6516, 1111 Constitution Avenue NW., Washington, DC 20224.

**FOR FURTHER INFORMATION CONTACT:** Requests for additional information or copies of the regulations should be directed to Larnice Mack at Internal Revenue Service, room 6512, 1111 Constitution Avenue NW., Washington, DC 20224, or at (202) 622–3179, or through the Internet at (*Larnice.Mack@irs.gov*).

**SUPPLEMENTARY INFORMATION:**

*Title:* Section 103—Remedial Payment Closing Agreement Program.

*OMB Number:* 1545–1528.

*Revenue Procedure Number:* Revenue Procedure 97–15.

*Abstract:* This information is required by the Internal Revenue Service to verify compliance with sections 57, 103, 142, 144, 145, and 147 of the Internal Revenue Code of 1986, as applicable (including any corresponding provision, if any, of the Internal Revenue Code of 1954). This information will be used by the Service to enter into a closing agreement with the issuer of certain state or local bonds to establish the closing agreement amount.

*Current Actions:* There are no changes being made to the revenue procedure at this time.

*Type of Review:* Extension of a currently approved collection.

*Affected Public:* State, local or tribal government, and not-for-profit institutions.

*Estimated Number of Respondents:* 50.

*Estimated Time Per Respondent:* 1 hour, 30 minutes.

*Estimated Total Annual Burden Hours:* 75.

The following paragraph applies to all of the collections of information covered by this notice:

An agency may not conduct or sponsor, and a person is not required to respond to, a collection of information unless the collection of information displays a valid OMB control number. Books or records relating to a collection of information must be retained as long as their contents may become material in the administration of any internal revenue law. Generally, tax returns and tax return information are confidential, as required by 26 U.S.C. 6103.

**Request for Comments**

Comments submitted in response to this notice will be summarized and/or included in the request for OMB

approval. All comments will become a matter of public record. Comments are invited on: (a) Whether the collection of information is necessary for the proper performance of the functions of the agency, including whether the information shall have practical utility; (b) the accuracy of the agency's estimate of the burden of the collection of information; (c) ways to enhance the quality, utility, and clarity of the information to be collected; (d) ways to minimize the burden of the collection of information on respondents, including through the use of automated collection techniques or other forms of information technology; and (e) estimates of capital or start-up costs and costs of operation, maintenance, and purchase of services to provide information.

Approved: December 20, 2005.

**Glenn Kirkland,**

*IRS Reports Clearance Officer.*

[FR Doc. 05–24564 Filed 12–28–05; 8:45 am]

BILLING CODE 4830–01–P

# Corrections

Federal Register

Vol. 70, No. 249

Thursday, December 29, 2005

This section of the FEDERAL REGISTER contains editorial corrections of previously published Presidential, Rule, Proposed Rule, and Notice documents. These corrections are prepared by the Office of the Federal Register. Agency prepared corrections are issued as signed documents and appear in the appropriate document categories elsewhere in the issue.

## DEPARTMENT OF EDUCATION

### Office of Special Education and Rehabilitative Services, Overview Information, Vocational Rehabilitation Services, Projects for American Indians With Disabilities; Notice Inviting Applications for New Awards for Fiscal Year (FY) 2006

*Correction*

In notice document E5–7721 beginning on page 76044 in the issue of Thursday, December 22, 2005 make the following corrections:

1. On page 76044, in the second column, under *Deadline for Transmittal of Applications:*,''April 21, 2005'' should read, ''April 21, 2006''.

2. On page 76045, in the third column, under 3. *Sumission Dates and Times:*, in the third line, ''April 21, 2005'' should read, ''April 21, 2006''.

[FR Doc. Z5–7721 Filed 12–28–05; 8:45 am]

BILLING CODE 1505–01–D

Federal Register

Thursday,
December 29, 2005

# Part II

# Department of Transportation

## Federal Aviation Administration

**14 CFR Parts 401, 415 et al.**

**Human Space Flight Requirements for Crew and Space Flight Participants; Proposed Rule**

**DEPARTMENT OF TRANSPORTATION**

**Federal Aviation Administration**

**14 CFR Parts 401, 415, 431, 435, 440, 450, and 460**

**[Docket No. FAA–2005–23449; Notice No. 05–17]**

**RIN 2120–AI57**

## Human Space Flight Requirements for Crew and Space Flight Participants

**AGENCY:** Federal Aviation Administration (FAA), DOT.

**ACTION:** Notice of proposed rulemaking (NPRM).

**SUMMARY:** The FAA proposes requirements for human space flight of crew and space flight participants as required by the Commercial Space Launch Amendments Act of 2004. If adopted, this rulemaking would establish requirements for crew qualifications, training, and notification. It would also establish training and informed consent requirements for space flight participants. The rulemaking would also modify existing financial responsibility requirements to account for the FAA's new authority for space flight participants and crew, and to issue experimental permits. The experimental permit is the subject of a separate rulemaking. The FAA is conducting this rulemaking in order to fulfill its responsibilities under the new act. The requirements are designed to provide an acceptable level of safety to the general public, and to notify individuals on board of the risks associated with a launch or reentry.

**DATES:** Send your comments on or before February 27, 2006.

**ADDRESSES:** You may send comments [identified by Docket Number FAA–2005–23449] using any of the following methods:

- DOT Docket Web site: Go to *http://dms.dot.gov* and follow the instructions for sending your comments electronically.
- Government-wide rulemaking Web site: Go to *http://www.regulations.gov* and follow the instructions for sending your comments electronically.
- Mail: Docket Management Facility; U.S. Department of Transportation, 400 Seventh Street, SW., Nassif Building, Room PL–401, Washington, DC 20590.
- Fax: 1–202–493–2251.
- Hand Delivery: Room PL–401 on the plaza level of the Nassif Building, 400 Seventh Street, SW., Washington, DC, between 9 a.m. and 5 p.m., Monday through Friday, except Federal holidays.

For more information on the rulemaking process, see the **SUPPLEMENTARY INFORMATION** section of this document.

*Privacy:* We will post all comments we receive, without change, to *http://dms.dot.gov,* including any personal information you provide. For more information, see the Privacy Act discussion in the **SUPPLEMENTARY INFORMATION** section of this document.

*Docket:* To read background documents or comments received, go to *http://dms.dot.gov* at any time or to Room PL–401 on the plaza level of the Nassif Building, 400 Seventh Street, SW., Washington, DC, between 9 a.m. and 5 p.m., Monday through Friday, except Federal holidays.

**FOR FURTHER INFORMATION CONTACT:** For technical information, contact Kenneth Wong, Deputy Manager, Licensing and Safety Division, Commercial Space Transportation, AST–200, Federal Aviation Administration, 800 Independence Avenue, SW., Washington, DC 20591; telephone (202) 267–8465; facsimile (202) 267–3686, e-mail *ken.wong@faa.gov.* For legal information, contact Laura Montgomery, Senior Attorney, Office of the Chief Counsel, Federal Aviation Administration, 800 Independence Avenue, SW., Washington, DC 20591; telephone (202) 267–3150; facsimile (202) 267–7971, e-mail *laura.montgomery@faa.gov.*

**SUPPLEMENTARY INFORMATION:**

### Comments Invited

The FAA invites interested persons to participate in this rulemaking by submitting written comments, data, or views. We also invite comments relating to the economic, environmental, energy, or federalism impacts that might result from adopting the proposals in this document. The most helpful comments reference a specific portion of the proposal, explain the reason for any recommended change, and include supporting data. We ask that you send us two copies of written comments.

We will file in the docket all comments we receive, as well as a report summarizing each substantive public contact with FAA personnel concerning this proposed rulemaking. The docket is available for public inspection before and after the comment closing date. If you wish to review the docket in person, go to the address in the **ADDRESSES** section of this preamble between 9 a.m. and 5 p.m., Monday through Friday, except Federal holidays. You may also review the docket using the Internet at the web address in the **ADDRESSES** section.

*Privacy Act:* Using the search function of our docket Web site, anyone can find and read the comments received into any of our dockets, including the name of the individual sending the comment (or signing the comment on behalf of an association, business, labor union, etc.). You may review DOT's complete Privacy Act Statement in the **Federal Register** published on April 11, 2000 (65 FR 19477–78) or you may visit *http://dms.dot.gov.*

Before acting on this proposal, we will consider all comments we receive on or before the closing date for comments. We will consider comments filed late if it is possible to do so without incurring expense or delay. We may change this proposal in light of the comments we receive.

If you want the FAA to acknowledge receipt of your comments on this proposal, include with your comments a pre-addressed, stamped postcard on which the docket number appears. We will stamp the date on the postcard and mail it to you.

### Proprietary or Confidential Business Information

Do not file in the docket information that you consider to be proprietary or confidential business information. Send or deliver this information directly to the person identified in the **FOR FURTHER INFORMATION CONTACT** section of this document. You must mark the information that you consider proprietary or confidential. If you send the information on a disk or CD ROM, mark the outside of the disk or CD ROM and also identify electronically within the disk or CD ROM the specific information that is proprietary or confidential.

Under 14 CFR 11.35(b), when we are aware of proprietary information filed with a comment, we do not place it in the docket. We hold it in a separate file to which the public does not have access, and place a note in the docket that we have received it. If we receive a request to examine or copy this information, we treat it as any other request under the Freedom of Information Act (5 U.S.C. 552). We process such a request under the DOT procedures found in 49 CFR part 7.

### Availability of Rulemaking Documents

You can get an electronic copy using the Internet by:

(1) Searching the Department of Transportation's electronic Docket Management System (DMS) Web page *(http://dms.dot.gov/search)*;

(2) Visiting the Office of Rulemaking's Web page at *http://www.faa.gov/avr/arm/index.cfm*; or

(3) Accessing the Government Printing Office's Web page at *http://www.gpoaccess.gov/fr/index.html*.

You can also get a copy by sending a request to the Federal Aviation Administration, Office of Rulemaking, ARM–1, 800 Independence Avenue, SW., Washington, DC 20591, or by calling (202) 267–9680. Make sure to identify the docket number, notice number, or amendment number of this rulemaking.

**Authority for This Rulemaking**

The FAA's authority to issue rules regarding commercial space transportation safety is found under the general rulemaking authority, 49 U.S.C. 322(a), of the Secretary of Transportation to carry out Subtitle IX, Chapter 701, 49 U.S.C. 70101–70121 (Chapter 701). Additionally, the recently enacted Commercial Space Launch Amendments Act of 2004 (the CSLAA), describes in more detail the scope of the agency's authority. Under 49 U.S.C. 70105(b)(4), no holder of a license or permit may launch or reenter crew unless the crew has received training and has satisfied medical or other standards specified in a license or permit in accordance with FAA regulations. This rulemaking would impose crew qualification and training requirements and implement the statutory requirement that an operator advise the flight crew that the U.S. Government has not certified the launch vehicle as safe. Section 70105(b)(5) provides for the FAA to promulgate regulations for the holder of a license or permit to inform a space flight participant in writing about the risks of launch or reentry. Under the FAA's public safety mandate, the FAA here proposes training and security requirements for a space flight participant.

**Table of Contents**

I. Background
II. General Discussion of the Proposals
A. Launch and Reentry With Crew
1. Definitions Applicable to Crew
2. Authority and Process
3. Pilot and Remote Operator Qualifications
4. Medical Standards for Crew
5. Crew Training
6. Crew Notification
7. Environmental Control and Life Support System
8. Smoke Detection and Fire Suppression
9. Human Factors
10. Verification Program
11. Crew and Space Flight Participant Waiver of Claims Against U.S. Government
B. Launch and Reentry With a Space Flight Participant
1. Risk to Space Flight Participants
2. Informed Consent
3. Physical Examination
4. Space Flight Participant Training
5. Security Requirements
C. Financial Responsibility and Waiver of Liability
1. Proposal To Combine Parts 440 and 450
2. Customers of Permittee
3. Space Flight Participants and Crew
III. Rulemaking Analyses and Notices
IV. The Proposed Amendment

## I. Background

Chapter 701 authorizes the Secretary of Transportation and, through delegations, the FAA's Associate Administrator for Commercial Space Transportation, to oversee, license, and regulate both launches and reentries, and the operation of launch and reentry sites when carried out by U.S. citizens or within the United States. 49 U.S.C. 70104, 70105; U.S. Federal Aviation Administration, Commercial Space Transportation Delegations of Authority, N1100.240 (Nov. 21, 1995). Chapter 701 directs the FAA to exercise this responsibility consistent with public health and safety, safety of property, and the national security and foreign policy interests of the United States, and to encourage, facilitate, and promote commercial space launch and reentry by the private sector. 49 U.S.C. 70105, 70103.

In September 2000, the FAA issued regulations for licensing reusable launch vehicle (RLV) missions and for the conduct of space reentry activities. Commercial Space Transportation Reusable Launch Vehicle and Reentry Licensing Regulations; Final Rule, 65 FR 56618, 56620 (Sept. 19, 2000). Later, the FAA developed ''Draft Guidelines for Licensed Suborbital RLV Operations With Flight Crew,'' (Oct. 7, 2003).

Historically, license applicants have consisted of operators of expendable launch vehicles, which do not carry crew or passengers. Accordingly, the FAA's regulation of space launch activities has mainly addressed the safety of the uninvolved public from launch hazards. New developments in technology, potential markets, and the law have changed this. Lured by a prize of $10 million, a group of inventors and entrepreneurs began working to create suborbital reusable launch vehicles to take private citizens into space for short periods of weightlessness and a view of outer space and their home planet. The X Prize Foundation, which set up a $10 million prize for this contest, modeled the prize after early aviation prizes, intending the X Prize to jumpstart the space tourism industry.

The FAA in April 2004, issued two RLV mission specific licenses: one for Scaled Composites and one for XCOR Aerospace in accordance with 14 CFR parts 431 and 440. These licenses apply to suborbital RLV missions with a pilot on board.[1] The FAA used the draft flight crew guidelines to assist in these two license application evaluations. To protect the safety of the uninvolved public, the FAA imposed operational requirements, as well as a system safety process to identify hazards and risk mitigation measures, including operational constraints. Operational constraints included restraints on the trajectory of SpaceShipOne over specific populated areas.

Scaled Composites won the X Prize on October 4, 2004, by being the first to finance privately, build, and launch a vehicle able to carry three people to an altitude of 100 kilometers (62 statute miles). Scaled Composites' SpaceShipOne had to return safely to Earth, and then repeat the trip within two weeks.

Although Scaled Composites won the prize, other developers were contestants and are still working to reach space. More than 20 teams from seven countries registered to compete. Concurrent with Scaled Composites winning the X Prize, a new company, Virgin Galactic, announced that it would offer rides to space on a new model of the vehicle that won the prize. Space may soon open up to citizen explorers, businesses, and tourists.

In December 2004, Congress passed the Commercial Space Launch Amendments Act. The CSLAA requires that a phased approach be used in regulating commercial human space flight; that is, regulatory standards governing human space flight must evolve as the industry matures. In the near term, the CSLAA requires that the FAA: (1) Issue guidelines or advisory circulars to guide the implementation of the CSLAA as soon as practical after the date of its enactment; (2) issue proposed regulations relating to crew, space flight participants, and permits for launch or reentry of reusable suborbital rockets not later than December 23, 2005; and (3) issue final regulations not later than June 23, 2006. On February 11, 2005, the FAA issued ''Draft Guidelines for Commercial Suborbital Reusable Launch Vehicle Operations With Flight Crew'' and ''Draft Guidelines for Commercial Suborbital Reusable Launch Vehicle Operations With Space Flight Participants.''

The CSLAA made the FAA responsible for the safety of space flight participants and crew. The CSLAA limits, however, the FAA's ability to

[1] The FAA treats a pilot as part of a flight safety system for protecting the public.

carry out that responsibility for eight years from the date of enactment. The CSLAA requires that a space flight participant be informed of the risks of taking a ride on a rocket, and the FAA may issue regulations requiring space flight participants to undergo an appropriate physical examination.[2]

These rules also would apply to expendable launch vehicle (ELV) launches with humans on board. Although the FAA prepared this NPRM to accommodate reentry and reusable launch vehicles, the FAA is aware that there are plans to launch crewed vehicles on ELVs. Expendable launch vehicles could carry humans on board as they did during the Mercury, Gemini and Apollo programs. This could involve mounting crew capsules on ELVs in order to launch crew or space flight participants to orbit. Unless the National Aeronautics & Space Administration (NASA) or the Department of Defense conducted the launch for the Federal Government, the FAA would license these activities as commercial launches and reentries and the requirements proposed here would apply.

The requirements proposed as a new part 460 would apply to licensees and permittees under Chapter 701, and to crew and space flight participants on board a launch vehicle and to a remote operator. This rulemaking proposes crew notification, medical, qualification, and training requirements. The FAA would also establish requirements governing environmental control and life support systems, smoke detection and fire suppression, and human factors. The FAA would require an operator to account for human factors whenever the crew must perform safety-critical roles. Additionally, the FAA proposes to require an operator to implement a verification program sufficient to verify the integrated performance of a vehicle's hardware and any software in an operational flight environment before allowing a space flight participant to be on board.

The FAA would also impose requirements for space flight participants. This rulemaking would require an operator to inform a space flight participant of the risks of space travel generally and of the operator's vehicle in particular. An operator would also have to advise a space flight participant that the U.S. Government has not certified the vehicle as safe for carrying flight crew or space flight participants. Although the FAA continues to recommend that a prospective space flight participant obtain a physical examination before embarking on a journey to space, the FAA does not propose to require it here. This rulemaking would require training and general security requirements for a space flight participant.

Finally, the FAA proposes to implement the changes to its financial risk sharing and responsibility requirements due to the recently enacted Commercial Space Launch Amendments Act of 2004. In brief, the CSLAA requires crew and space flight participants to enter into reciprocal waivers of claims with the U.S. Government. Crew includes flight crew and any remote operator. The CSLAA expressly excludes space flight participants for eligibility from indemnification against third party claims. Launches and reentries performed pursuant to a permit are also excluded from eligibility for indemnification. The FAA is otherwise addressing its new authority under the CSLAA to issue permits in a separate rulemaking.

## II. General Discussion of the Proposals

The proposed requirements would apply to licensees and permittees under Chapter 701, and to crew and space flight participants on board a launch vehicle. This rulemaking would define crew and flight crew and propose crew notification, medical, qualification, and training requirements. It would also impose informed consent and training requirements for space flight participants.

### *A. Launch and Reentry With Crew*

#### 1. Definitions Applicable to Crew

This rulemaking would apply to flight crew and any remote operator not on board the vehicle. The only ground crew to which this rulemaking would apply is a remote operator.

In keeping with the statutory definition, the FAA would define crew to mean any employee or independent contractor of a licensee, transferee, or permittee, or of a contractor or subcontractor of a licensee, transferee, or permittee, who performs activities in the course of that employment directly relating to the launch, reentry, or other operation of or in a launch vehicle or reentry vehicle that carries human beings. Although the CSLAA only mentions employees as being eligible for the status of crew, the FAA considers flight crew part of the flight safety system. Therefore the FAA proposes to treat as crew any human being who is part of the flight safety system, regardless of whether the person's status is that of an employee or independent contractor. The FAA would treat as crew those persons on board a vehicle and any remote operator of the vehicle. A remote operator would only include someone engaged actively in controlling the vehicle, and not someone with some ability to affect the vehicle but no ability to control its course. Congress provided the agency some latitude in determining what individuals on the ground to include in the definition of crew. This has implications for safety, notification requirements, and crew waivers of liability against the U.S. Government. The CSLAA itself defines crew broadly to include a person ''who performs activities in the course of that employment directly relating to the launch, reentry, or other operation of or in a launch vehicle or reentry vehicle that carries human beings.'' 49 U.S.C. 70102(2). The House proposed this definition in H.R. 3752, a predecessor bill to H.R. 5382, which was enacted as the CSLAA. Accordingly, the House Report accompanying H.R. 3752 may be useful in interpreting the CSLAA. The report states that the FAA should not interpret the definition of crew ''overly broadly'' to encompass individuals with peripheral roles, such as sales agents or insurance providers. Commercial Space Launch Amendments Act, H.R. 3752, H. Rep. 429, 108th Cong., 2d Sess. (Mar. 1, 2004). Nonetheless, the House Science Committee contemplated that the FAA would apply it more broadly than pilots or remote operators of a launch vehicle. *Id.*

The FAA's proposed definition of crew would include all crew on board, namely the flight crew[3], as part of the crew, and thus give a broader meaning to ''crew'' than one consisting of only a pilot or remote operator. Because Congress contemplated operation of *or* in a vehicle (emphasis added), Congress appears to have intended some persons on the ground to be included as part of the crew. A remote operator of a vehicle satisfies the Congressional direction to include some ground crew as part of the crew. Also, a remote operator is someone whose employment would directly relate to a launch or reentry, thus satisfying the other statutory prong.

[2] The FAA has decided against prescribing specific medical requirements for space flight participants at this time. Instead, the FAA issued guidelines recommending that space flight participants obtain an evaluation of their medical history to determine whether a physical examination might be appropriate. ''Draft Guidelines for Commercial Suborbital Reusable Launch Vehicle Operations with Space Flight Participants,'' Federal Aviation Administration (Feb. 11, 2005).

[3] The FAA proposes to define flight crew as crew that is on board a vehicle during a launch or reentry.

If Congress meant to include as ground crew those who are involved only in preparation but who are not on board during flight, certain perverse consequences would ensue. For example, under such an interpretation, the CSLAA would require an operator to inform employees working on the ground that the U.S. Government has not certified a vehicle as safe for carrying crew or space flight participants. 49 U.S.C. 70105(b)(4)(B). In light of the fact that those employees would not be on board, this would not be a meaningful exercise because they do not need the warning. A statute should not be read to reach an irrational result, and the FAA will not do so here.

XCOR commented on the FAA's February 11, 2005 draft guidelines on flight crew. Those comments are available in the docket. XCOR commented that flight crew, in the RLV community, is usually taken to mean those crewmembers whose roles are essential to public safety. XCOR believes that the definition of flight crew in the guidelines is too broad because it would include a pilot, a flight engineer, and a steward. XCOR maintains that although a pilot's function is essential to public safety, and a flight engineer's function may be essential to public safety, a steward's duty to maintain the safety and comfort of passengers is not essential to public safety if the vehicle is designed or operated so that unruly or panicked passengers cannot interfere with the operation of the vehicle. Consequently, XCOR would define what commercial aviation calls ''cabin crew,'' those crewmembers aboard a vehicle whose roles are not essential to public safety, to distinguish them from those crewmembers aboard the vehicle whose roles are essential to public safety. Furthermore, XCOR recommends a definition of flight crew that excludes cabin crew so that the qualification, training, and medical guidelines for flight crew would not apply to such cabin crew as a steward.

The FAA's training proposal should alleviate XCOR's concerns in this area. Although the FAA proposes to employ a definition of flight crew that would encompass the same persons as the definition of the draft guidelines, the FAA would not require all members of a flight crew to undergo the same training or to possess the same qualifications. Most of a flight attendant's or steward's duties will not affect public safety. Those duties would not be the subject of regulatory oversight. However, some duties might affect public safety, such as preventing space flight participants from having access to the flight deck and interfering with the pilot. In order to address the various flight crew roles and responsibilities, the FAA proposes that each flight crew member train for his or her role. This would mean that a flight attendant or steward would not be required to undergo unnecessary training, only that required for his or her role.

2. Authority and Process

The CSLAA allows the FAA to impose crew training requirements. Additionally, the FAA retains full authority to continue protecting the uninvolved public. Accordingly, as it has in the past, the FAA finds that it needs to protect the crew when it is part of the flight safety system, and proposes crew training requirements that are intended for the safety of members of the public, including those on the ground, in the air, and in space. In a piloted vehicle, the vehicle's flight crew is an integral part of its flight safety system. This is because they are in a position to respond to risk to the public, such as aborting the flight or maneuvering a vehicle away from populated areas. For purposes of public safety, therefore, the FAA proposes a number of crew training requirements.

In brief, the FAA would require that crew be properly trained. As authorized by the CSLAA, the FAA would require each crew member to receive training and satisfy medical or other standards as specified in a license or permit. 49 U.S.C. 70105(b)(4)(A). As is the case now, this means that the FAA will be able to add terms and conditions specific to a particular vehicle to a license or permit. If for example, a particular situation required additional training measures, the FAA would impose them through the license or permit process. Where the FAA proposes a performance standard, the agency also proposes that an operator describe to the FAA during the license or permit process the measures it would take to satisfy that performance standard. Accordingly, the FAA proposes some changes to parts 415, 431 and 435 to ensure that an operator demonstrates how it will achieve compliance before it obtains a license.[4] Where the FAA requirements would be more specific, the FAA does not propose to require a demonstration from an applicant, merely compliance. For example, an applicant would not have to demonstrate that informed consent has been obtained from a space flight participant as part of its application process.

3. Pilot and Remote Operator Qualifications

The FAA would require, for purposes of proposed part 460, that a pilot and any remote operator of a launch or reentry vehicle that will operate in the National Airspace System (NAS), possess an FAA pilot certificate with an instrument rating and that they demonstrate the knowledge of the NAS necessary to operate the vehicle. The pilot or remote operator would also need to have the aeronautical experience and skills necessary to pilot and control the vehicle. In order to obtain a pilot certificate, a person must become educated in the rules of operating in the NAS. A pilot certificate also provides evidence of a person's skill level. When the FAA licensed SpaceShipOne missions, the agency accepted the pilots' commercial pilot certificates as demonstrating adequate skills. A person holding a sport pilot certificate or a student pilot would be unlikely to satisfy this standard.

The FAA does not propose to specify the particular kind of pilot certificate required nor what category, class, type or instrument ratings are needed because different operators are proposing vehicles of varied and unique designs. For example, there are numerous possible vehicle configurations and operations: vertical take-off and landing and horizontal take-off and landing. A vehicle may or may not be a winged vehicle, and it may or may not be air launched. It may land powered like an airplane or unpowered like a glider. Accordingly, the FAA would assess, through the licensing or permitting process, the type of pilot certificate, flight experience, and mission-specific training for proposed operations that a pilot possessed. For example, during its licensing evaluation, the FAA took into consideration the extensive mission-specific training that the SpaceShipOne pilots underwent with a ground simulator and aircraft with operating characteristics similar to SpaceShipOne and that these pilots possessed commercial pilot certificates.

The FAA proposes to require an instrument rating as well. The FAA anticipates that regardless of the kind of vehicle used, there will be times when a pilot will be relying on instrument skills and competency. Accordingly, a person who held an instrument rating would indicate an appropriate level of skill and competency to pilot these launch and reentry vehicles.

[4] Likewise, for an applicant seeking an experimental permit under 49 U.S.C. 70105a, the FAA is currently conducting another rulemaking to ensure that a permit applicant demonstrates compliance with proposed part 460.

The FAA's February 11, 2005 draft crew guidelines recommend that a pilot hold ratings to operate one or more aircraft with similar characteristics for as many phases of the mission as practicable. The guidelines use the term ''as practicable'' because the FAA realizes that some launch vehicles will not possess operating characteristics similar to existing aircraft. The FAA continues to consider this advisable, but because of the differences in proposed vehicles and the likelihood that there will be vehicles without characteristics similar to aircraft, the FAA will not, other than an instrument rating, mandate such a requirement through regulation. Nonetheless, if an operator proposed to demonstrate the adequacy of the training of its crew by showing that a pilot held ratings for similar operations, the FAA would look favorably on such a demonstration. In addition to holding commercial pilot certificates, the SpaceShipOne pilots held ratings to operate aircraft with similar characteristics for certain phases of flight of SpaceShipOne and underwent rigorous training.

The FAA considered two alternatives to its proposed requirements. The FAA considered not requiring a pilot certificate at all, and only relying on the proposed performance requirement that a pilot possess the necessary skills and experience. This is because possession of a pilot certificate could demonstrate that a pilot possessed the skills and experience necessary to control the vehicle. Thus, a requirement to possess a pilot certificate might be redundant. Alternatively, the FAA could require that the pilot or any remote operator possess a commercial pilot certificate to demonstrate the minimum pilot skills required by 14 CFR part 61. In that case, the FAA would likely require in the final rule that a pilot or any remote operator hold a valid and current commercial pilot certificate with an instrument rating. Additionally, the FAA would require that the pilot or remote operator possess aeronautical experience and skills necessary to pilot and control the launch and reentry vehicle being applied for. The aeronautical experience would include a certain amount of aeronautical experience in an aircraft in flight, instrument training, and training in the launch and reentry vehicle being applied for. The FAA may still adopt one of these proposals and requests comment on these options as well.

Conversely, the FAA considered proposing that a remote operator not be required to possess a pilot certificate. In this case, a remote operator would still have to demonstrate knowledge of the NAS and have the aeronautical experience and skills necessary to pilot and control the vehicle. In aviation, there is no consensus on whether requiring piloting experience is necessary or appropriate for remote operators. The U.S. Air Force currently requires such experience for remote operators of unmanned aerial vehicles (UAVs).[5] Thus, U.S. Air Force remote operators are experienced pilots who have at least one operational tour of duty in another combat aircraft. Unlike the U.S. Air Force, the U.S. Army does not require a remote operator of a UAV to be a pilot.

Regardless of vehicle design, having a pilot certificate and aeronautical experience provides evidence of a basic level of knowledge of and experience with the NAS, such as communications, navigation, airspace limitations, and other aircraft traffic avoidance, that will help promote public safety. Furthermore, a pilot with an instrument rating has been trained to fly and navigate entirely by reference to flight instruments.

The FAA requests comments on whether a remote operator of a launch or reentry vehicle with a human on board should possess a pilot certificate. The FAA anticipates that a pilot certificate would serve as the clearest indication that a person has the necessary knowledge of the NAS and safety issues. The FAA recognizes, however, that there may be other, less burdensome methods of demonstrating compliance and requests comment accordingly.

4. Medical Standards for Crew

The FAA would require that each member of the flight crew and any remote operator possess and carry a second-class airman medical certificate issued in accordance with 14 CFR part 67 and issued within 12 months prior to launch or reentry. The physical and mental state of the flight crew has to be sufficient to perform safety-related roles.

Second-class airman medical certification standards have provided an acceptable level of safety for commercial pilots for many years. Commercial pilots are medically certificated to a level between a private pilot and an airline transport pilot; the former requiring less stringent vision standards and having longer certificate validity, and the latter requiring more stringent cardiovascular and certificate validity standards. An FAA second-class airman medical certificate is issued to an applicant who may reasonably be expected, for the year-long duration of the certificate, to perform safely the duties required to exercise commercial pilot privileges.

Different aviation pilot certificates require different medical certificates. The validity of a particular airman medical certificate relates to the aviation privilege being exercised. For example, a first-class airman medical certificate is valid for 6 months for aviation privileges requiring a first-class airman medical certificate, for 12 months for those requiring a second-class airman medical certificate, and for 24 or 36 months for those requiring a third-class airman medical certificate. Because space operations are not defined in terms of privileges being exercised, the FAA does not need to set forth a particular validity structure. Furthermore, for purposes of space operations, the FAA does not need to describe a medical certificate by the aviation operations for which it is valid. In the space context, the FAA only requires that it be issued within the past 12 months, in keeping with the 12-month validity period used in aviation for pilots exercising commercial pilot privileges.

Applicants for any class of airman medical certificate must meet minimum vision, hearing, mental, neurological, and basic cardiovascular standards. Such standards are required to ensure that pilots are able to perform their aviation duties safely. For example, commercial pilots need adequate intermediate vision to monitor aircraft instruments, and other cockpit equipment, and adequate color vision to be able to distinguish aviation signal colors. They need an acceptable level of hearing to be able to communicate with Air Traffic Control, any flight crew, other crewmembers, or passengers. They require mental stability to exercise sound judgment.

Part 67 was developed for aviation. The FAA will, through licensing and permitting, acquire experience with medical certification of space flight crews. The FAA considers, however—at least during these early stages, primarily of suborbital space flight—that second-class airman medical certification standards would provide a minimum level of medical certification adequate for space flight crews to perform safety-critical roles.

In addition to requiring a second-class medical certificate, the FAA proposes a performance standard, which could be tailored to the different stresses caused by different vehicles. The performance standard would require each member of the crew to be able to withstand the

[5] The applicability depends, at least in part, on whether controlling the vehicle involves ''stick-and-rudder'' control inputs, or simply punching buttons to send commands to a vehicle autopilot.

stresses of space flight sufficiently to carry out his or her role on board so that the vehicle will not harm the public.

The FAA does not, at this early stage of development of the industry, presume to anticipate what environmental stresses any particular crew member may have to endure to operate a vehicle. Nonetheless, although different vehicles may impose different stresses, those stresses are likely to include microgravity, acceleration, and vibration. Different vehicles and flight profiles may subject those on board to different stresses. The FAA therefore would not want yet to impose requirements that apply across the board, preferring, instead, to evaluate each separately through the licensing or permitting process. For example, SpaceShipOne's pilots underwent training that included aerobatic maneuvers and unusual attitude recovery training to match the anticipated stresses of the eventual flight environment. Unusual attitudes may include high rates of roll and all-attitude spins. The FAA found that SpaceShipOne's pilot training demonstrated the ability to withstand the anticipated stresses, such as those due to vehicle acceleration and deceleration.

The FAA would implement this broad performance standard on a case-by-case basis. An operator would have to demonstrate satisfaction of this standard in the course of applying for a license, a permit or a modification to a license or permit. Grant of a license or permit would be conditioned, as it is now, on an operator abiding by the representations made in its application. The FAA anticipates that an operator may change crew members from time to time. Because the initial grant of a license or permit may have been conditioned on the acceptability of the original crew, the FAA would have to modify the license. Alternatively, the FAA could foresee an operator describing its testing process sufficiently to demonstrate that the operator would be able to ascertain whether an individual crew member could withstand the specific stresses of a given vehicle.

The case-by-case assessments of whether a flight crew member satisfied the proposed performance standard of withstanding the stresses of space flight would serve two purposes. The assessments would ensure that any particular member of the flight crew could perform his or her duties in whatever environment was proposed. Additionally, these assessments would provide data for the FAA to develop more concrete standards as the industry progresses. The FAA does not expect orbital commercial human space flight to occur in the immediate future. Nonetheless, it does anticipate its eventual appearance, and recognizes that different standards may be required for orbital and suborbital flights. The FAA will gather data for the development of those standards over time.

5. Crew Training

The FAA would require each member of a crew be trained to ensure that the vehicle will not harm the public. The crew would also be trained to respond to planned and anomalous events. The FAA would require an operator to develop a mission- and configuration-specific training program for a pilot and any remote operator and define standards by which the pilot and remote operator would be trained so that the vehicle would not harm the public. The operator's training program would include for each mission, either simulation training, training on a similar aircraft, flight testing, or another training method approved by the FAA.

The FAA would require an operator to ensure that any crew-training device used to meet the training program requirements realistically represented the vehicle's configuration and mission or the operator would have to inform the crew member being trained of the differences. XCOR through its comments on the FAA's February 11, 2005 draft guidelines on flight crew states that some early flight crew training devices will not be realistic. According to XCOR, this lack of realism will not mean they are useless as training devices because it may be better to train the flight crew on a simulator with known differences from the flight article than not to train them on a simulator at all. XCOR recommended that training devices with known dissimilarities be allowed but the dissimilarities should be minimized, and flight crew should be aware of the differences in behavior between the training device and the flight article.

The FAA would require crew training to include nominal (*i.e.*, normal) and non-nominal flight conditions. Training to respond to planned and unplanned events would allow the crew to better respond to emergencies. The crew would obtain a competent understanding of vehicle systems, vehicle characteristics, and vehicle capabilities, as well as operational, malfunction, and contingency procedures. The non-nominal situations would include aborts and emergencies.

The FAA would require additional training for a pilot and any remote operator of a launch or reentry vehicle. A pilot would have to undergo training in procedures that direct the vehicle away from the public in the event the flight crew had to abandon the vehicle during flight. The pilot and any remote operator would also have to train in each mode of control or propulsion, including any transition between modes, so that the pilot would be able to control the vehicle throughout the flight regime. For example, the pilot and any remote operator would have to be able to maintain control of a vehicle during a transition from aerodynamic control surfaces to a reaction control system and vice versa. Likewise, training would be necessary for any transition from an air-breathing to a rocket propulsion system and vice-versa.

The FAA proposes a number of requirements for a training program. The FAA would require an operator to continually update its training program to ensure that training incorporated lessons-learned from both training and operational missions. This would be accomplished with a documented system to track revisions and updates. To that end, the FAA would require a training program to capture, in writing, lessons-learned as experience was gained. Experience will reveal additional events and anomalies to which a crew would have to respond. The flight crew should be prepared for events and anomalies discovered during training and mission operations. The FAA would require a licensee or permittee to document the training completed by each member of the crew and maintain the documentation for each active member of the crew. Accurate documentation is important for tracking and ensuring that crew are up-to-date with their training requirements.

The FAA would require an operator to establish a recurrent training schedule and ensure that all crew qualifications and training were current before starting to operate a vehicle with humans on board. This would ensure that all crew were qualified and had received the necessary training at the time of operation. The FAA's February 11, 2005 crew guidelines recommended that prior to each mission, the flight crew receive vehicle and mission-specific training. Rocketplane Limited, Inc. through its April 28, 2005 comments on the FAA's crew guidelines stated that retraining would be an important requirement if there were periods of inactivity between flights. Rocketplane Limited, Inc. recommended retraining be required when more than thirty days elapsed between flights rather than

requiring it prior to each mission. XCOR stated that common sense should determine the appropriate level of training necessary to safely conduct the flight. Hence, the FAA would require an operator to establish a recurrent training schedule.

6. Crew Notification

The FAA would require an operator to inform, in writing, any individual serving as flight crew and each remote operator, that the United States Government has not certified the launch vehicle as safe for carrying crew or space flight participants. If someone is operating a vehicle remotely, the FAA believes that Congress intended that the operator advise the remote operator of the risks he or she is taking with the people on board.

7. Environmental Control and Life Support System

The proper functioning of the crew is necessary to ensure protection of the public. The FAA would require an operator to provide atmospheric conditions adequate to sustain life and consciousness for all inhabited areas within a launch or reentry vehicle. The flight crew could perform the roles necessary to carry out this proposed requirement. Proper environmental control is essential for people and for the functioning of safety-critical equipment on board a vehicle.

There are many aspects to controlling the atmosphere of a vehicle that an operator would have to consider. The FAA proposes to require an operator to monitor and control the composition and any revitalization of the atmosphere to maintain safe levels for flight crew respiration during nominal and non-nominal operations. The atmosphere in inhabited areas should have safe levels of oxygen and carbon dioxide to allow normal respiration. Because of normal human metabolic effluent, carbon dioxide will accumulate and it may be necessary for it to be removed.[6]

The FAA would require a licensee, permittee or flight crew to monitor and control the pressure of the atmosphere to maintain safe levels for flight crew respiration. An essential aspect of the body's ability to absorb oxygen from the air is the atmospheric pressure, specifically the partial pressure of oxygen ($pO_2$). Total pressure and the partial pressure of carbon dioxide should also be monitored and kept at levels sufficient to ensure consciousness and proper functioning of the crew.

An operator would have to monitor and control the temperature of the atmosphere to maintain safe levels for the flight crew. Although humans can survive in a relatively wide range of temperatures, it is essential to regulate the temperature within a cabin or suit. Requiring proper temperature control would ensure the flight crew maintained a degree of situational awareness sufficient for these individuals to perform their job. An operator would also have to monitor and control the ventilation and circulation of the cabin atmosphere to maintain safe levels for the flight crew. Requiring proper ventilation would ensure the flight crew maintained situational awareness by reducing stagnant air, which could contain a high concentration of carbon dioxide.

The FAA proposes to require an operator to monitor and control the humidity of the cabin atmosphere to maintain safe levels for the flight crew. If a flight crew depended on visual information through a window, humidity control would be necessary to avoid windows fogging and condensation that can hinder the pilot's vision. The FAA proposes to require an operator to control contamination and particulate concentrations for the flight crew to prevent interference with the crew's ability to operate the vehicle. The atmosphere should be free from harmful or hazardous concentrations of gases, vapors, and particulates that can be inhaled.

The FAA proposes to require an operator to provide an adequate redundant or secondary oxygen supply for the flight crew due to the extreme importance of having sufficient oxygen to enable the flight crew to function. In the event of a failure of the primary atmospheric control system, the redundant or secondary system would supply oxygen for the flight crew.

Lastly, the operator would have to provide a redundant means of preventing cabin depressurization or prevent incapacitation of the flight crew in the event of a loss of cabin pressure. If a loss of pressure were to occur, it could have serious physiological effects on the flight crew, including hypoxia, decompression sickness, hypothermia, and vaporization of tissue fluids. This performance standard could be satisfied by different means. For example, in addition to conducting ground tests and prelaunch cabin leak checks, Scaled Composites used dual pane windows, dual seals on cabin pass-throughs, dual door seals, and dual pressurization systems for SpaceShipOne. Use of a pressure suit to prevent incapacitation of the flight crew if there were a loss of cabin pressure could be another means to satisfy this performance standard.

8. Smoke Detection and Fire Suppression

The FAA would require an operator or flight crew to have the ability to detect smoke and suppress a cabin fire to prevent incapacitation of the flight crew. Prior to a fire occurring, smoke can rapidly incapacitate a pilot or obscure the pilot's vision such that the vehicle cannot be flown safely. A crew should be able to respond to a vehicle fire so as not to risk the public.

9. Human Factors

The FAA would require an operator to account for human factors so that the flight crew could perform safety-critical roles. Human factors engineering is a discipline that applies knowledge of human capabilities and limitations to the design of systems, machines, work environment, and operations. Human factors considerations draw on multiple disciplines such as psychology, physiology, engineering, ergonomics, and medicine. The design and layout of displays and controls and the amount of crew workload can affect the ability of the crew to perform safety-critical roles. Therefore, the FAA would require an operator to account for human factors that can affect the flight crew's ability to perform safety-critical roles.

Mockups, simulators, and human factors analyses such as functional and task analyses are examples of human factors-related applications to assess human-machine interfaces or human-in-the loop functions and performance. ''The Human Factors Design Standard'' (HF–STD–001, FAA), ''DOD Design Criteria Standard—Human Engineering'' (MIL–STD–1472), ''Flying Qualities of Piloted Aircraft'' (MIL–HDBK–1797), and ''Man-Systems Integration Standards'' (NASA–STD–3000) may provide guidance on applying human factors engineering. Human-related factors account for the majority of fatal aircraft accidents. Conversely, aircraft system malfunctions are involved in a relatively small fraction of aircraft incidents and accidents. Some human factors-related lessons learned from aviation may apply to suborbital RLVs with a flight crew on board.

The FAA proposes to require an operator to make provisions for restraint or stowage of all individuals and objects in a cabin, so moving objects would not interfere with the flight crew's operation of the vehicle during flight. The FAA does not expect that this requirement would prevent an operator from

[6] Guidance on environmental control and life support systems may be found in ''Designing For Human Presence in Space: An Introduction to Environmental Control and Life Support Systems'' (NASA RP–1324) and ''Man-Systems Integration Standards'' (NASA–STD–3000).

allowing space flight participants to experience weightlessness during a part of the mission. In order to allow this experience, the FAA would look at whether the restraints on space flight participants would keep those participants from interfering with flight crew activities. For example, space flight participants separated by a bulkhead might be considered adequately restrained.

10. Verification Program

The FAA proposes to require an operator to implement a verification program sufficient to verify the integrated performance of a vehicle's hardware and any software in an operational flight environment. The FAA would require this verification program to include flight testing and the program would have to be successfully completed before allowing any space flight participant on board during a flight. An operator needs to establish a safety record to disclose to a space flight participant as required by the CSLAA. Furthermore, a space flight participant could not be present during flight testing in order to avoid distracting the flight crew from its public safety mission. The FAA intends early, experimental flight testing to take place with the flight crew's entire attention dedicated to the vehicle, not to anyone else on board.

XCOR through its comments on the FAA's February 11, 2005 draft guidelines on space flight participants states that flight testing plays an integral role in the provision of informed consent. Without a flight test plan, and some number of flight tests, the RLV operator cannot provide the space flight participant with a valid number[7] for demonstrated reliability. XCOR further noted that if an operator cannot provide a valid number for demonstrated reliability, then the space flight participant cannot give informed consent, and the operator cannot fly the space flight participant.

In addition to avoiding distraction of the crew and establishing a safety record for disclosure to a space flight participant, flight testing provides other benefits. Flight testing provides data to validate analytical tools and models used to predict environments and responses. The initial flights and envelope expansion flights of a new vehicle typically pose the highest risk. Although flight testing does not eliminate risk, it does mitigate risk by potentially uncovering safety-related problems that may go undetected if relying only on analysis and ground testing. Verification of performance by flight testing can provide more information than ground testing and analysis and should be conducted to the maximum extent possible. Ground testing and analysis are often based on estimates and approximations, and may not fully simulate possible subsystem interactions in flight environments or may not accurately simulate actual flight conditions.

The FAA will initially determine the amount of verification and, specifically, flight testing of launch or reentry vehicles on a case-by-case basis through the licensing or permitting process. The appropriate level of testing depends on many factors, including the vehicle's mission profile, operational restrictions, test and flight history, component and subsystem heritage, and design and operating margins.

11. Crew and Space Flight Participant Waiver of Claims Against U.S. Government

The CSLAA requires crew and each space flight participant to execute a reciprocal waiver of claims with the FAA. 49 U.S.C. 70112(b)(2). This requirement would not apply to ground crew other than remote operators.

The CSLAA does not require crew and space flight participants to waive claims against each other or against a licensee or permittee. The CSLAA does not, however, prevent an operator from making a waiver of liability a condition of an agreement between it and a space flight participant or crew.

*B. Launch and Reentry With a Space Flight Participant*

This rulemaking would also establish informed consent and training requirements for a space flight participant on board a launch or reentry authorized by the FAA. Regardless of whether a space flight participant pays for a ride, the space flight participant must provide informed consent and be trained.[8]

1. Risk to Space Flight Participants

The CSLAA characterizes what is commonly referred to as a passenger as a ''space flight participant.'' The statute defines this person to mean ''an individual, who is not crew, carried within a launch vehicle or reentry vehicle.'' 49 U.S.C. 70102(17). This characterization signifies that someone on board a launch vehicle or reentry vehicle is not a typical passenger with typical expectations of transport, but someone going on an adventure ride.

Space flight remains inherently risky. Testimony concerning a predecessor to the CSLAA highlights the situation. Michael S. Kelly, of Northrop-Grumman/Xon Tech, testified that ''space flight is years from being routine, or even a mode of transportation per se. Transportation refers to reaching a desired destination. Space flight, for the foreseeable future, will be an end in itself.'' Commercial Space Act of 2003, H.R. 3245, 108th Cong., (Nov. 5, 2003) (statement of Michael Kelly). Mr. Kelly characterized the experience as an adventure ride. Others have compared it to mountain climbing, skydiving, not wearing a helmet while riding a motorcycle, and other risky endeavors.

New technologies carry new risks. Nonetheless, Congress recognizes that ''private industry has begun to develop commercial launch vehicles capable of carrying human beings into space, and greater private investment in these efforts will stimulate the Nation's commercial space transportation industry as a whole.'' 49 U.S.C. 70101(11). To that end, the CSLAA finds that ''the public interest is served by creating a clear legal, regulatory, and safety regime for commercial human space flight.'' 49 U.S.C. 70101(14). With an infant industry, Congress notes, ''regulatory standards must evolve as the industry matures, so that regulations neither stifle technology development nor expose crew or space flight participants to avoidable risks as the public comes to expect greater safety for crew and space flight participants from the industry.'' 49 U.S.C. 70101(15). The CSLAA is structured to allow the same kind of risk that mountain climbers and other adventurers seek in the context of space flight.

The CSLAA provides the FAA authority to issue rules to protect space flight participants. 49 U.S.C. 70103. That authority, however, is limited. The FAA is only able to impose ''additional

[7] The FAA interprets XCOR's use of the term ''valid number'' to mean a reliability number based on experience.

[8] Although under the CSLAA a space flight participant may not provide compensation for a space flight on a launch authorized by an FAA permit, Congress did not foreclose the presence of a space flight participant on a permitted launch. Under the CSLAA, the FAA may issue a permit only for a reusable suborbital rocket that will be launched or reentered solely for research and development to test new design concepts, new equipment or new operating techniques; showing compliance with requirements as part of the process for obtaining a license under Chapter 701; or crew training prior to obtaining a license for a launch or reentry using the design of the rocket for which the permit would be issued. 49 U.S.C. 70105a(d)(1)–(3). Although a space flight participant could not pay to ride on a rocket operated under a permit, a space flight participant could be on board. Congress contemplated as much in section 70105(b)(5), when it imposed conditions on holders of a license or permit launching or reentering a space flight participant.

license requirements for a launch vehicle carrying a human being for compensation or hire, necessary to protect the health and safety of flight crew or space flight participants,'' if such requirements are imposed pursuant to final regulations. 49 U.S.C. 70105(b)(2)(D). This provision appears to limit the FAA's current approach of imposing requirements on a case-by-case basis through license terms and conditions. For purposes of protecting the public on the ground, when an applicant proposes an operation not covered by existing rules, the FAA has the ability to impose license restrictions to address new proposals. For purposes of protecting space flight participants and crew, however, Congress has limited the FAA's ability to impose safety requirements until the FAA passes regulations. Space flight participants should therefore have no expectations that the FAA is imposing individualized or tailored requirements designed to achieve their protection.

Those regulations, in turn, may only be promulgated under certain circumstances. 49 U.S.C. 70105(c). For eight years, the CSLAA only permits the FAA to issue regulations restricting or prohibiting design features or operating practices that result in a serious injury, fatality or a close call to those on board during an FAA authorized flight. This means that the FAA has to wait for harm to occur or almost occur before it can impose restrictions, even against foreseeable harm. Instead, Congress requires that space flight participants be informed of the risks. To that end, the FAA proposes notification requirements in subpart B of proposed part 460.

2. Informed Consent

Congress requires that a licensed or permitted operator inform a space flight participant in writing about the risks of the launch and reentry, including the safety record of the launch or reentry vehicle type. 49 U.S.C. 70105(b)(5)(A). The FAA's § 460.45 would implement this statutory provision. Additionally, the proposed regulations would require an operator to describe these hazards and risks in a manner that is understandable to the space flight participant. As with crew, the CSLAA requires an operator to inform each space flight participant that the United States Government has not certified the launch vehicle as safe for carrying crew or space flight participants. The FAA would also require a space flight participant to provide his or her consent in writing before boarding a vehicle.

More specifically, under § 460.45, an operator would have to provide the safety record of all launch or reentry vehicles that have carried one or more persons on board, including both U.S. Government and private sector vehicles. The development of commercial launch vehicles to carry space flight participants is in the early stages. Consequently, newly developed launch vehicles will not have the extensive flight-test history or operational experience that exists for commercial airplanes. Because of the lack of flight-test and operational experience, the risks of the operator's particular launch vehicle and of vehicles like it should be disclosed. The House Committee on Science report, H. Rep. 108–429, clarifies that Congress intended all government and private sector vehicles to be included in this disclosure. Because most human space flight to date has taken place under government auspices, the government safety record currently provides the most data. The operator should provide a record of all vehicles that have carried a person because they are the most relevant to what the operators propose. Regardless of whether humans traveled to space on board a vehicle destined for a suborbital or orbital mission, those persons traveled on new and unproven vehicles based on technology as new then, as what may be developed now. The vehicle and technology were therefore as risky. Likewise, because those vehicles were intended for a human on board, greater care was likely to have been taken in its design and construction. The same should be expected for commercial human space flight. Accordingly, the historical record of human space flight provides an appropriate and reasonable basis for comparison of risks to current human space flight.

Additionally, this section would also require an operator to describe the safety record of its own vehicle to each space flight participant. The operator's safety record would have to include the number of vehicle flights, the number of safety-related anomalies or failures, including on the ground or in flight, and whether any corrective actions were taken to resolve these anomalies or failures. If a space flight participant requested more detail, the operator would have to provide a description of the safety-related anomalies or failures and what the corrective actions were. For the general public, this technical information will not likely be useful, and the FAA does not want the more dire possibilities obscured by a deluge of technical data. Nonetheless, there will be space flight participants who will be able to obtain useful information from this data and make better informed choices as to whether they want to ride that particular vehicle. Accordingly, the FAA proposes to require an operator to inform each space flight participant that the safety-related data is available and provide the data upon request.

In its February 11, 2005, guidelines, the FAA recommended that an operator provide space flight participants an opportunity to ask questions orally to acquire a better understanding of the hazards and risks of the mission. An opportunity to ask questions allows a space flight participant a chance to get clarification on any information that may be confusing or unclear. Although the FAA does not now propose to require this recommendation, the FAA continues to consider this good practice, and believes such opportunities should be provided.

The CSLAA requires that before receiving compensation from a space flight participant or making an agreement to fly a space flight participant, an operator inform the space flight participant in writing that the U.S. Government has not certified the launch vehicle as safe for carrying crew or space flight participants. 49 U.S.C. 70105(b)(5)(B). Accordingly, the FAA proposes to implement this statutory requirement in proposed 460.45(b).

3. Physical Examination

In its February 11, 2005 guidelines, the FAA recommended that a space flight participant provide his or her medical history to a physician experienced or trained in the concepts of aerospace medicine. The physician would determine whether the space flight participant should undergo an appropriate physical examination before boarding a vehicle destined for space flight. 49 U.S.C. 70105(b)(6)(A). Guidance for the medical assessment of space flight participants is provided in a memorandum, ''Guidance for Medical Screening of Commercial Aerospace Space Flight Participants,'' (Mar. 31, 2003). The Federal Air Surgeon of the FAA's Office of Aerospace Medicine and the Director of the FAA's Civil Aerospace Medical Institute provided this guidance to the Associate Administrator for Commercial Space Transportation. Medical conditions that may indicate that an individual should not participate in a mission should be identified so that participation may be avoided where a space flight participant's involvement in a mission could aggravate or exacerbate a pre-existing medical condition that could put the flight crew or other space flight participants at risk. The FAA does not intend to propose that this

recommendation become a requirement, unless a clear public safety need is identified. It is, of course, in a space flight participant's own interest to obtain such medical advice for both suborbital and orbital missions, and the FAA will rely on that self-interest until a demonstrable need arises to mandate this through regulation. The FAA highly recommends that a space flight participant seek such medical advice if he or she plans to be on an orbital mission. Orbital missions are longer in duration than suborbital missions and space flight participants are exposed to flight conditions or environments such as microgravity and radiation for a longer period of time.

4. Space Flight Participant Training

The FAA would require an operator to train each space flight participant before flight on how to respond to emergency situations, including loss of cabin pressure, fire, smoke, and emergency egress. If a space flight participant did not receive this training, he or she might interfere with the crew's ability to protect public safety.

5. Security Requirements

The FAA proposes to require an operator to implement security requirements to prevent any space flight participant from jeopardizing the safety of the flight crew or the public. Security restrictions currently apply to passengers for airlines. Some of the restrictions prohibit a person carrying explosives, firearms, knives, or other weapons from boarding an airplane. Similar types of security restrictions for launch or reentry vehicles would contribute to the safety of the public by preventing a space flight participant from potentially interfering with the flight crew's operation of the vehicle. Any such interference might jeopardize the flight crew's ability to protect the public. The FAA notes that one means of satisfying part of this requirement would be for an operator to consult the ''no-fly'' list of the Transportation Security Administration.

*C. Financial Responsibility and Waiver of Liability*

Under Chapter 701, Congress establishes risk sharing for licensees by providing for the conditional payment of claims by the United States Government of those claims in excess of the required financial responsibility up to $1,500,000,000 for third party liability. After those limits, the licensee is responsible for all claims. The U.S. Government waives its claims for Government range property damage in excess of required maximum probable loss (MPL)-based property insurance. Under a permit, the Government is responsible for claims in excess of the required insurance amount for Government range property claims and the holder of the permit is responsible for all other claims. In short, the Government property provisions remain the same for both licensees and permittees. A licensee remains eligible for indemnification from third party claims, however a permittee is not.

The FAA proposes to combine and modify 14 CFR parts 440 and 450, which govern financial responsibility requirements for launch and reentry. These proposed changes indicate where the CSLAA includes permittees in the statutory scheme for financial and liability risk sharing. Combining the two parts is intended only to streamline the regulations, not to effect any substantive changes. In particular, licensees who operate expendable launch vehicles without humans on board should experience no change.

The CSLAA made changes to the financial responsibility and legal risk sharing regime of Chapter 701. In brief, the CSLAA requires crew and space flight participants to enter into reciprocal waiver of claims with the U.S. Government. Crew includes flight crew and any remote operator. The CSLAA expressly excludes space flight participants from indemnification eligibility against third party claims. Launches performed pursuant to a permit are also excluded from eligibility for indemnification against third party claims.

The Committee Report accompanying H.R. 3752 explains Congress' reasoning behind excluding space flight participants from eligibility for indemnification. Commercial Space Launch Amendments Act of 2004, H.R. 3752, H.R. Rep. 429, 11108th Cong., 2d Sess. (Mar. 1, 2004). The Science Committee notes that a space flight participant is not subject to any substantive government regulation. Additionally, a space flight participant can purchase insurance, or a licensee or permittee may purchase insurance that would cover claims against a space flight participant.

The Report also addresses indemnification and insurance for activities authorized by experimental permits. Again, because the Committee anticipates that permitted activities will be more lightly regulated and thus possess a correspondingly greater risk to the federal government, the CSLAA does not provide for the possibility of indemnification.

1. Proposal To Combine Parts 440 and 450

The FAA proposes, for purposes of efficiency, to combine parts 440 and 450. This has advantages and disadvantages, and the FAA requests comment on the utility of this approach. When it first promulgated parts 440 and 450 as separate parts, the FAA did so in order to avoid confusing separate activities. It treated launch and reentry as separate activities.[9] A commercial equivalent to the U.S. Shuttle would likely be operated by a single operator rather than the two distinct operators currently contemplated under the approach to part 450. Accordingly, the FAA had to decide how to accommodate both the suborbital missions and those that may eventually take place to orbit. They each have a launch and reentry component. With a suborbital launch it is harder to tell where launch ends and reentry begins. Given that a suborbital flight is a single event with FAA jurisdiction covering the entire flight, the distinction does not matter. However, with a vehicle akin to the U.S. Space Shuttle, an operator would have to obtain separate maximum probable loss determinations for launch and reentry, and would enter into two sets of cross waivers with the government and any customers, under proposed parts 1 and 2 of appendix B to part 440.

2. Customers of Permittee

The proposed requirements account for the possibility that a permittee may have a customer. This is so even in light of the statutory prohibition on a permittee offering to carry people or property for compensation or hire. Because a permittee may carry people or property for free, there may be situations where someone places property such as a research experiment on board a vehicle operating under a permit. This may, for example, include a student owned payload. The FAA would consider the owner of the experiment a customer required to sign a cross waiver under section 440.17. The FAA would not consider a space flight participant riding for free a customer under this requirement. A space flight participant remains subject to the rules governing space flight participants.

3. Space Flight Participants and Crew

Proposed section 440.17 contains some differences from the current

[9] The 1998 legislation responded to a reentry vehicle called COMET—a reentry vehicle with different launch and reentry operators. Hence, there could be two licensees or permittees.

scheme for a space flight participant. The CSLAA does not require a space flight participant or crew to ''flow down'' to its contractors the waiver of claims as Chapter 701 otherwise requires of licensees and customers. Accordingly, the FAA does not propose to require that a space flight participant or crew implement a reciprocal waiver of claims with each of his or her customers, contractors or subcontractors. They are all free to do so, of course, if they choose.

Likewise, as mentioned earlier in this notice, the CSLAA does not require crew and space flight participants to waive claims against each other or against a licensee or permittee. The CSLAA does not, however, prevent an operator from making a waiver of liability a condition of an agreement between it and a space flight participant or crew.

4. *Waiver of Claims for U.S. Government Employees in Permittee Cross-Waivers*

Congress excluded permittees from eligibility for indemnification against third party claims. The FAA treats employees of the U.S. Government as third parties for purposes of implementing the financial responsibility requirements of Chapter 701. 14 CFR 440.3(15)(ii). Accordingly, because permittees are not eligible for third party indemnification, the FAA does not propose that the U.S. Government waive claims for bodily injury or property damage sustained by U.S. Government personnel in excess of required insurance.

## III. Rulemaking Analyses and Notices

*Paperwork Reduction Act*

This proposal contains the following new information collection requirements. As required by the Paperwork Reduction Act of 1995 (44 U.S.C. 3507(d)), the FAA has submitted the information requirements associated with this proposal to the Office of Management and Budget for its review.

*Title:* Human Space Flight Requirements for Flight Crew and Space Flight Participants

*Summary:* This proposal requires the FAA to regulate private human space flight. President Bush signed into law on December 23, 2004, the Commercial Space Launch Amendments Act of 2004. The CSLAA promotes the development of the emerging commercial space flight industry and makes the DOT and the FAA responsible for regulating commercial human space flight under 49 U.S.C. Subtitle IX, Chapter 701. CSLAA required the FAA to: (1) Issue guidelines or advisory circulars to guide the implementation of the CSLAA as soon as practical after the date of its enactment on December 23, 2004; (2) issue proposed regulations that include those relating to crew, space flight participants, and permits for launch or reentry of reusable suborbital rockets not later than December 23, 2005; and (3) issue final regulations not later than June 23, 2006.

*Use of:* This proposal would support the information needs of the FAA to protect public safety and notify individuals on board of the risks they face from launch or reentry.

*Respondents (including number of):* The likely respondents to this proposed information requirement are commercial operators planning to perform human space flight with crew and space flight participants. The FAA estimates that there will be five to six companies that would offer human space flight.

*Frequency:* The FAA finds that the frequency of information requirements is dependent on the number of space flights, and estimates that this number can range from one to more than 100 space flights annually.

*Annual Burden Estimate:* The FAA expects that this proposed rule would impose additional reporting and recordkeeping requirements on launch operators who are subject to its provisions; it would have the following impacts for each year over a 10-year period:

- For the high mission scenario, the FAA estimates that it would take 3,946.9 hours annually for the paperwork to inform flight crew and space flight participants of the launch risks and to prepare reciprocal waivers for flight crew and space flight participants. The estimated cost would be $273,915.
- For the low cost scenario, the FAA estimates that it would take 2,003.2 hours annually for the paperwork to inform flight crew and space flight participants of the launch risks and to prepare reciprocal waivers for flight crew and space flight participants. The estimated cost would be $139,023.

For purposes of this analysis, the FAA will assume the mid-point between these two scenarios in estimating total cost and time; thus, this proposed rulemaking would take 2,975.05 hours per year, costing $206,469 annually.

The proposed regulation would cause increased paperwork for the Federal Government, as it would have to review each mission and ascertain compliance during oversight activities at commercial operator facilities. The proposed rule would have the following impacts on the Federal Government over a 10-year period:

- For the high cost scenario, the FAA estimates that it would take 2,028.4 hours annually, costing $105,558 in resources expended.
- For the low cost scenario, the FAA estimates that it would take 1,016.2 hours annually, costing $52,883 in resources expended.

For purposes of this analysis, the FAA will assume the mid-point between these two scenarios in estimating Federal Government revenues expended; thus, this proposed rulemaking would take 1,522.3 hours per year, costing $79,221 annually.

The agency is soliciting comments to—

(1) Evaluate whether the proposed information required is necessary for the proper performance of the roles of the agency, including whether the information will have practical utility;

(2) Evaluate the accuracy of the agency's estimate of the burden;

(3) Enhance the quality, utility, and clarity of the information to be collected; and

(4) Minimize the burden of the collection of information on those who are to respond, including through the use of appropriate automated, electronic, mechanical, or other technological collection techniques or other forms of information technology.

Individuals and organizations may submit comments on the information collection requirement by February 27, 2006, and should direct them to the address listed in the **ADDRESSES** section of this document. Comments also should be submitted to the Office of Information and Regulatory Affairs, OMB, New Executive Building, Room 10202, 725 17th Street, NW., Washington, DC 20053, Attention: Desk Officer for FAA.

According to the 1995 amendments to the Paperwork Reduction Act (5 CFR 1320.8(b)(2)(vi)), an agency may not collect or sponsor the collection of information, nor may it impose an information collection requirement unless it displays a currently valid OMB control number. The OMB control number for this information collection will be published in the **Federal Register**, after the Office of Management and Budget approves it.

*Regulatory Evaluation*

Changes to Federal regulations must undergo several economic analyses. First, Executive Order 12866 directs that each Federal agency shall propose or adopt a regulation only upon a reasoned determination that the benefits of the intended regulation justify its costs.

Second, the Regulatory Flexibility Act of 1980 requires agencies to analyze the economic impact of regulatory changes on small entities. Third, the Trade Agreements Act, (19 U.S.C. 2531–2533), prohibits agencies from setting standards that create unnecessary obstacles to the foreign commerce of the United States. In developing U.S. standards, this Trade Act requires agencies to consider international standards and, where appropriate, to use the international standards as the basis for U.S. standards. Fourth, the Unfunded Mandates Reform Act of 1995 (Public Law 104–4) requires agencies to prepare a written assessment of the costs, benefits, and other effects of proposed or final rules that include a Federal mandate likely to result in the expenditure by State, local, or tribal governments, in the aggregate, or by the private sector, of $100 million or more annually as adjusted for inflation.

In conducting these analyses, FAA has determined this rule: (1) Has benefits that justify its costs, (2) is a ''significant regulatory action'' for non-economical reasons as defined in Executive Order 12866, and is ''significant'' as defined in DOT's Regulatory Policies and Procedures; (3) will not have a significant economic impact on a substantial number of small entities; (4) will not reduce barriers to international trade; and (5) does not impose an unfunded mandate on state, local, or tribal governments, or on the private sector. These analyses are available in the docket.

1. Potentially Impacted Parties

Private Sector

- Commercial operators who will be operating launch or reentry vehicles with crew and space flight participants on board.
- Flight crew.
- Remote operator.
- Space flight participants.

Government

- Federal Aviation Administration.

2. Assumptions and Ground Rules Used in Analysis (Discount Rate, Period of Analysis, Value of Life, Cost of Injuries)

- All monetary values are expressed in 2004 dollars.
- The time horizon for the analysis is 10 years (2006 to 2016).
- Costs are discounted at 7%.
- Hourly Burdened Industry Rate is $69.40
- Hourly Burdened Government Rate is $52.04
- The high launch forecast used in the analysis is 10,142 over ten years.
- The low launch forecast used in the analysis is 5,081 over ten years.
- Proposed requirements that were fulfilled by the SpaceShipOne launches or that constitute prudent business practice do not impose costs.
- Preparation time expended by commercial entities for specific requirements that might cause industry to incur costs because the proposed requirements are not current practice is as follows:

Benefits

The proposed rule would offer some benefit impacts that are not readily quantified. The principal benefit would be to ensure that the human commercial space flight industry understands and adheres to the current practices that have worked thus far to protect public safety. The proposed rule would help preserve the level of public safety already achieved by commercial operations. Additionally, informing space flight participants of mission hazards and risks may help mitigate any behavior or reaction during space flight that would jeopardize mission success and consequently public safety. For example, a surprise noise or abrupt vehicle motion during flight could frighten an ''uninformed'' space flight participant, causing that person to behave or act (*e.g.*, panic) in a manner that could adversely impact mission performance and jeopardize public safety by causing a crash or falling debris from an airborne explosion. Informing candidate space flight participants of risks may deter an individual from participating in space flight who otherwise would panic during flight and possibly create a situation that would jeopardize public safety.

Total Costs

The proposed rule would result in a total cost impact ranging from $1.9 to $3.8 million over the ten-year period from 2006 through 2015 (undiscounted 2004 dollars). The human space flight industry would incur 72 percent of the total costs, ranging from $1.4 million to $2.7 million to comply with the proposed rule. The FAA would incur 28 percent of the total costs, ranging from $529,000 to $1.1 million to administer the proposed regulatory requirements. Costs are summarized in the following table.

SUMMARY OF INCREMENTAL COST IMPACTS ATTRIBUTABLE TO THE PROPOSED RULE OVER THE TEN-YEAR PERIOD, 2006 THROUGH 2015

(In 2004 dollars)

| Category | Undiscounted | | Discounted [a] | |
|---|---|---|---|---|
| | Upper bound | Lower bound | Upper bound | Lower bound |
| Human Space Flight Industry Compliance Costs | $2,739,149 | $1,390,221 | $1,728,231 | $876,863 |
| Federal Aviation Administration Administrative Costs | 1,055,579 | 528,830 | 656,445 | 328,890 |
| Total Costs Attributable to the Proposed Rule | 3,794,728 | 1,919,051 | 2,384,676 | 1,205,753 |

[a] Calculated using a discount factor of seven percent over a ten-year period.

Comparison of Benefits and Costs

The principal benefit of the proposed rule would be to ensure that the human commercial space flight industry understands and adheres to the current practices that have worked thus far to protect public safety. Additionally, by requiring an operator to inform the crew and space flight participants of the risks of spaceflight, the proposed rule would protect the public from the hazards an uninformed crew member or space flight participants could pose to the mission. We have not quantified these benefits, but the FAA believes that the benefits justify the costs of the proposed rule.

*Regulatory Flexibility Determination*

The Regulatory Flexibility Act of 1980 (RFA) establishes ''as a principle of regulatory issuance that agencies shall endeavor, consistent with the objective

of the rule and of applicable statutes, to fit regulatory and informational requirements to the scale of the business, organizations, and governmental jurisdictions subject to regulation.'' To achieve that principle, the RFA requires agencies to solicit and consider flexible regulatory proposals and to explain the rationale for their actions. The RFA covers a wide-range of small entities, including small businesses, not-for-profit organizations and small governmental jurisdictions. Agencies must perform a review to determine whether a proposed rule would have a significant economic impact on a substantial number of small entities. If the agency determines that it will, the agency must prepare a regulatory flexibility analysis as described in the Act.

However, if an agency determines that a proposed rule is not expected to have a significant economic impact on a substantial number of small entities, section 605(b) of the 1980 RFA provides that the head of the agency may so certify and a regulatory flexibility analysis is not required. The certification must include a statement providing the factual basis for this determination, and the reasoning should be clear.

The proposed rule would not have a significant economic impact on a substantial number of small entities. Because almost all the companies in the fledgling industry are small, the FAA concludes that a substantial number of small entities in the human space flight industry would be affected by the rule. However, we believe that the rule would not have a significant impact on these entities as explained below.

The proposed rule would require launch and reentry operators to perform certain actions that, although they may be considered prudent, may not be performed in current practice in all instances. These actions would cause a space transportation operator to incur minimal additional costs relative to current practice.

The North American Industry Classification System does not have a discrete code for commercial space transportation per se. However, it does have the following codes that collectively capture entities engaged in commercial space transportation: 336414, ''Guided Missile and Space Vehicle Manufacturing,'' 336415, ''Guided Missile and Space Vehicle Propulsion Unit and Parts Manufacturing,'' and 336419, ''Other Guided Missile and Space Vehicle Parts and Auxiliary Equipment Manufacturing.'' The Small Business Administration (SBA) has defined small business entities engaged in the aforementioned activities as those employing no more than 1,000 employees. Further, the SBA does not apply a size standard based on maximum annual receipts to define small business entities engaged in the above industries.

A substantial number of firms entering the human space flight industry are very small. Because the industry is a nascent industry, it is difficult to state how many and which entities will succeed in the industry. There are two companies licensed to perform launches with humans on board: Scaled Composites with about 135 employees and XCOR with about 10 employees. Only Scaled Composites has actually launched as of the date of this report: The industry therefore currently consists of one company. There are about six more companies that the FAA considers serious candidates in the industry because they have committed financial resources and another twenty companies that have expressed interest in entering the human spaceflight industry. The number of employees of these companies ranges from 5 to 40. Based on the definition of small business for the launch industry of entities employing no more than 1,000 employees, all of the above mentioned companies are small businesses with the exception of one: Virgin Galactic which may be considered a large business because it is a subsidiary of Virgin Airways which has over 1,000 employees. One may therefore conclude that a substantial number of companies that are either in the industry or interested in entering the industry are small businesses with fewer than 136 employees.

The FAA estimates that five to six companies will successfully enter the human space flight industry in the next ten years. We cannot yet divide this small number into categories by size; we only know that the vast majority of companies interested in entering the industry are very small (from 5 to 135 employees). We expect that these companies will be about the size of Scaled Composites, the only company thus far to have launched humans, once they start launching. Given the information we currently have the firms offering launches are very small.

The FAA has determined that the impacts are not significant. In order to make this estimate, we compared the incremental cost per mission and the total cost to estimated revenue. It should be noted that all of these estimates are extremely speculative due to the difficulty of predicting the structure of such a nascent industry; however, our projections of cost as a percent of revenue is extremely small.

The first input to the calculation is the number of expected missions, which FAA tentatively estimates is between 5,081 and 10,142 over the next 10 years, based on written proprietary information received from three companies expecting to offer launch services. To the extent that the industry develops more slowly than expected, these may be overestimates. The incremental cost per expected flight, however, is not affected by the estimated total number of flights.

The second input is the cost for the incremental safety activity required by this rulemaking. In the absence of this regulation, companies would certainly voluntarily engage in extensive testing and safety training, therefore the cost per mission of less than $300 does not represent the total investment in safety expected in this industry, but rather the incremental increase in safety related activity expected as a result of this regulation. As it is difficult to speculate on the amount of safety improving behavior undertaken in the absence of this regulation, FAA invites specific comment on this issue.

Putting the two inputs together, we estimate costs to perform 10,142 missions (upper bound) over ten years are $2,739,149 or an average of $270 per mission. We estimate costs to perform 5,081 (lower bound) over ten years are $1,390,221 or an average of $274 per mission. Since the industry is in its infancy and has not yet begun offering commercial flights, per mission costs and revenues are not known. However, prospective companies have quoted ticket prices of $102,000 to $250,000 per seat for early flights (with some predicting prices could fall to about $25,000 per seat after eight or nine years). If these prospective ticket prices and costs are accurate, then even under the lowest ticket prices quoted above, the regulatory cost per mission would be significantly less than 1% of revenues. The estimated $270 per mission cost that the rule would impose would therefore not be economically significant.

The FAA invites comments on the validity of the FAA's information, assumptions and estimates and any potential impacts.

Accordingly, pursuant to the Regulatory Flexibility Act, 5 U.S.C. 605(b), the FAA Administrator certifies that the proposed rule would not have a significant economic impact on a substantial number of small entities.

*International Trade Impact Assessment*

The Trade Agreement Act of 1979 prohibits Federal agencies from establishing any standards or engaging in related activities that create unnecessary obstacles to the foreign commerce of the United States. Legitimate domestic objectives, such as safety, are not considered unnecessary obstacles. Because this rulemaking would be largely consistent with current or prudent practice, it would not create obstacles. The statute also requires consideration of international standards and where appropriate, that they be the basis for U.S. standards. The FAA has assessed the potential effect of this proposed rule and determined that it would impose the same costs on domestic and international entities, and thus has a neutral trade impact.

*Unfunded Mandates Assessments*

The Unfunded Mandates Reform Act of 1995 (the Act) is intended, among other things, to curb the practice of imposing unfunded Federal mandates on State, local, and tribal governments. Title II of the Act requires each Federal agency to prepare a written statement assessing the effects of any Federal mandate in a proposed or final agency rule that may result in an expenditure of $100 million or more (adjusted annually for inflation) in any one year by State, local, and tribal governments, in the aggregate, or by the private sector; such a mandate is deemed to be a ''significant regulatory action.'' The FAA currently uses an inflation-adjusted value of $120.7 million in lieu of $100 million. This proposed rule does not contain such a mandate. The requirements of Title II do not apply.

*Executive Order 13132, Federalism*

The FAA has analyzed this proposed rule under the principles and criteria of Executive Order 13132, Federalism. We determined that this action would not have a substantial direct effect on the States, on the relationship between the National Government and the States, or on the distribution of power and responsibilities among the various levels of government, and therefore would not have federalism implications.

*Environmental Analysis*

FAA Order 1050.1E identifies FAA actions that are categorically excluded from preparation of an environmental assessment or environmental impact statement under the National Environmental Policy Act in the absence of extraordinary circumstances. The FAA has determined this proposed rulemaking action qualifies for the categorical exclusion identified in paragraph (4i) appendix F and involves no extraordinary circumstances.

*Regulations That Significantly Affect Energy Supply, Distribution, or Use*

The FAA has analyzed this NPRM under Executive Order 13211, Actions Concerning Regulations that Significantly Affect Energy Supply, Distribution, or Use (May 18, 2001). We have determined that it is not a ''significant energy action'' under the executive order because it is not a ''significant regulatory action'' under Executive Order 12866, and it is not likely to have a significant adverse effect on the supply, distribution, or use of energy.

**List of Subjects**

*14 CFR Part 401*

Human space flight, Organization and functions (Government agencies), Space safety, Space transportation and exploration.

*14 CFR Part 415*

Human space flight, Rockets, Space safety, Space transportation and exploration.

*14 CFR Part 431*

Human space flight, Reporting and recordkeeping requirements, Rockets, Space safety, Space transportation and exploration.

*14 CFR Part 435*

Human space flight, Reporting and recordkeeping requirements, Rockets, Space safety, Space transportation and exploration.

*14 CFR Part 440*

Armed forces, Federal buildings and facilities, Government property, Indemnity payments, Insurance, Reporting and recordkeeping requirements, Space transportation and exploration.

*14 CFR Part 450*

Armed forces, Federal buildings and facilities, Government property, Human space flight, Indemnity payments, Insurance, Reporting and recordkeeping requirements, Space transportation and exploration.

*14 CFR Part 460*

Human space flight, Reporting and recordkeeping requirements, Rockets, Space safety, Space transportation and exploration.

## IV. The Proposed Amendment

In consideration of the foregoing, the Federal Aviation Administration proposes to amend parts 401, 415, 431, 435, and 440; remove and reserve part 450 of Chapter III of title 14, Code of Federal Regulations; and add part 460 as follows—

## PART 401—ORGANIZATION AND DEFINITIONS

1. The authority citation for part 401 continues to read as follows:

**Authority:** 49 U.S.C. 70101–70121.

2. Section 401.5 is amended by adding the following definitions in alphabetical order to read as follows:

**§ 401.5 Definitions.**

* * * * *

*Crew* means any employee or independent contractor of a licensee, transferee, or permittee, or of a contractor or subcontractor of a licensee, transferee, or permittee, who performs activities in the course of that employment directly relating to the launch, reentry, or other operation of or in a launch vehicle or reentry vehicle that carries human beings. A crew consists of flight crew and any remote operator.

* * * * *

*Flight crew* means crew that is on board a vehicle during a launch or reentry.

* * * * *

*Operator* means a holder of a license or permit under 49 U.S.C. Subtitle IX, chapter 701.

* * * * *

*Pilot* means a flight crew member who has the ability to control, in real time, a launch or reentry vehicle's flight path.

* * * * *

*Remote operator* means a crew member who

(1) Has the ability to control, in real time, a launch or reentry vehicle's flight path, and

(2) Is not on board the controlled vehicle.

* * * * *

*Space flight participant* means an individual, who is not crew, carried within a launch vehicle or reentry vehicle.

*Suborbital rocket* means a vehicle, rocket-propelled in whole or in part, intended for flight on a suborbital trajectory, and the thrust of which is greater than its lift for the majority of the rocket-powered portion of its ascent.

*Suborbital trajectory* means the intentional flight path of a launch vehicle, reentry vehicle, or any portion thereof, whose vacuum instantaneous impact point does not leave the surface of the Earth.

* * * * *

## PART 415—LAUNCH LICENSE

### Subpart A—General

3. The authority citation for part 415 continues to read as follows:

**Authority:** 49 U.S.C. 70101–70121.

4. Add § 415.8 to read as follows:

#### § 415.8 Human space flight.

To obtain a launch license, an applicant proposing to conduct a launch with flight crew or a space flight participant on board must provide documentation demonstrating compliance with §§ 460.5, 460.7, 460.11, 460.13, 460.15, 460.17, 460.51 and 460.53 of this subchapter.

## PART 431—LAUNCH AND REENTRY OF A REUSABLE LAUNCH VEHICLE (RLV)

5. The authority citation for part 431 continues to read as follows:

**Authority:** 49 U.S.C. 70101–70121.

6. Add § 431.8 to read as follows:

#### § 431.8 Human space flight.

To obtain a license, an applicant proposing to conduct a reusable launch vehicle mission with flight crew or a space flight participant on board must provide documentation demonstrating compliance with §§ 460.5, 460.7, 460.11, 460.13, 460.15, 460.17, 460.51 and 460.53 of this subchapter.

## PART 435—REENTRY OF A REENTRY VEHICLE OTHER THAN A REUSABLE LAUNCH VEHICLE (RLV)

7. The authority citation for part 435 continues to read as follows:

**Authority:** 49 U.S.C. 70101–70121.

8. Add § 435.8 to read as follows:

#### § 435.8 Human space flight.

An applicant for a license to conduct a reentry with flight crew or a space flight participant on board the vehicle must provide documentation demonstrating compliance with §§ 460.5, 460.7, 460.11, 460.13, 460.15, 460.17, 460.51 and 460.53 of this subchapter.

## PART 450—[REMOVED]

9. Revise part 440 and remove part 450 to read as follows:

## PART 440—FINANCIAL RESPONSIBILITY

### Subpart A—Financial Responsibility for Licensed and Permitted Activities

Sec.

440.1 Scope of part.
440.3 Definitions.
440.5 General.
440.7 Determination of maximum probable loss.
440.9 Insurance requirements for licensed or permitted activities.
440.11 Duration of coverage for suborbital and launch activities; modifications.
440.12 Duration of coverage for reentry; modifications.
440.13 Standard conditions of insurance coverage.
440.15 Demonstration of compliance.
440.17 Reciprocal waiver of claims requirements.
440.19 United States payment of excess third-party liability claims.
Appendix A to Part 440—Information requirements for obtaining a maximum probable loss determination for licensed or permitted activities.
Appendix B to Part 440—Agreement for waiver of claims and assumption of responsibility for licensed launch or reentry
Appendix C to Part 440—Agreement for waiver of claims and assumption of responsibility for permitted activities
Appendix D to Part 440—Agreement for waiver of claims and assumption of responsibility for a crew member
Appendix E to Part 440—Agreement for waiver of claims and assumption of responsibility for a space flight participant

**Authority:** 49 U.S.C. 70101–70119; 49 CFR 1.47.

### Subpart A—Financial Responsibility for Licensed and Permitted Activities

#### § 440.1 Scope of part.

This part establishes financial responsibility and allocation of risk requirements for any launch or reentry authorized by a license or permit issued under this subchapter.

#### § 440.3 Definitions.

For purposes of this part—

*Bodily injury* means physical injury, sickness, disease, disability, shock, mental anguish, or mental injury sustained by any person, including death.

*Contractors and subcontractors* means those entities that are involved at any tier, directly or indirectly, in licensed or permitted activities, and includes suppliers of property and services, and the component manufacturers of a launch vehicle, reentry vehicle or payload.

*Customer* means

(1) Any person:

(i) Who procures launch or reentry services from a licensee or permittee;

(ii) To whom the customer has sold, leased, assigned, or otherwise transferred its rights in the payload (or any part of the payload) to be launched or reentered by the licensee or permittee, including a conditional sale, lease, assignment, or transfer of rights;

(iii) Who has placed property on board the payload for launch, reentry or payload services; or

(iv) To whom the customer has transferred its rights to the launch or reentry services.

(2) A space flight participant, for the purposes of this part, is not a customer.

*Federal range facility* means a U.S. Government-owned installation at which a launch or reentry takes place.

*Financial responsibility* means statutorily required financial ability to satisfy a liability obligation as required by 49 U.S.C. Subtitle IX, chapter 701.

*Government personnel* means employees of the United States, its agencies, and its contractors and subcontractors, involved in launch or reentry services for an activity authorized by an FAA license or permit. Employees of the United States include members of the Armed Forces of the United States.

*Hazardous operations* means activities, processes, and procedures that, because of the nature of the equipment, facilities, personnel, environment involved or function being performed, may result in bodily injury or property damage.

*Liability* means a legal obligation to pay a claim for bodily injury or property damage resulting from a licensed or permitted activity.

*License* means an authorization the FAA issues under this subchapter to launch or reenter.

*Licensed activity* means the launch of a launch vehicle or the reentry of a reentry vehicle conducted under a license the FAA issues.

*Maximum probable loss (MPL)* means the greatest dollar amount of loss for bodily injury or property damage that is reasonably expected to result from a licensed or permitted activity;

(1) Losses to third parties, excluding Government personnel and other launch or reentry participants' employees involved in licensed or permitted activities, that are reasonably expected to result from a licensed or permitted activity are those having a probability of occurrence on the order of no less than one in ten million.

(2) Losses to Government property and Government personnel involved in licensed or permitted activities that are reasonably expected to result from licensed or permitted activities are those having a probability of occurrence on the order of no less than one in one hundred thousand.

*Permit* means an authorization the FAA issues under this subchapter for the launch or reentry of a reusable suborbital rocket.

*Permitted activity* means the launch or reentry of a reusable suborbital rocket conducted under a permit the FAA issues.

*Property damage* means partial or total destruction, impairment, or loss of tangible property, real or personal.

*Regulations* mean the Commercial Space Transportation Licensing Regulations codified at 14 CFR Ch. III.

*Third party* means

(1) Any person other than:

(i) The United States, any of its agencies, and its contractors and subcontractors involved in launch or reentry services for a licensed or permitted activity;

(ii) A licensee, permittee, and its contractors and subcontractors involved in launch or reentry services for a licensed or permitted activity;

(iii) A customer and its contractors and subcontractors involved in launch or reentry services for a licensed or permitted activity;

(iv) A member of a crew; and

(v) A space flight participant.

(2) Government personnel, as defined in this section, are third parties.

*United States* means the United States Government, including each of its agencies.

(b) Except as otherwise provided in this section, any term used in this part and defined in 49 U.S.C. 70101–70121, or in. § 401.5 of this chapter shall have the meaning contained therein.

**§ 440.5 General.**

(a) No person may commence or conduct any launch or reentry activity that requires a license or permit unless that person has demonstrated compliance with the requirements of this part.

(b) The FAA will prescribe the amount of financial responsibility a licensee or permittee is required to obtain and any additions to or modifications of the amount in a license or permit order issued concurrent with or subsequent to the issuance of a license or a permit.

(c) Demonstration of financial responsibility under this part shall not relieve a licensee of ultimate responsibility for liability, loss, or damage sustained by the United States resulting from a licensed activity, except to the extent that:

(1) Liability, loss, or damage sustained by the United States results from willful misconduct of the United States or its agents;

(2) Any covered claim of a third party for bodily injury or property damage arising out of any particular licensed activity exceeds the amount of financial responsibility required under § 440.9(c) of this part and does not exceed $1,500,000,000 (as adjusted for inflation occurring after January 1, 1989) above such amount, and are payable pursuant to 49 U.S.C. 70113 and § 440.19 of this part. A claim of an employee of any entity listed in subparagraphs (1)(ii) through (1)(iii) in the Third party definition in § 440.3 of this part for bodily injury or property damage is not a covered claim;

(3) A covered claim for property loss or damage exceeds the amount of financial responsibility required under § 440.9 (e) of this part and does not result from willful misconduct of the licensee; or

(4) The licensee has no liability for covered claims by third parties for bodily injury or property damage arising out of any particular launch or reentry that exceeds $1,500,000,000 (as adjusted for inflation occurring after January 1, 1989) above the amount of financial responsibility required under § 440.9(c).

(d) Demonstration of financial responsibility under this part does not relieve a permittee of ultimate responsibility for liability, loss, or damage sustained by the United States resulting from a permitted activity, except to the extent that:

(1) Liability, loss, or damage sustained by the United States results from willful misconduct of the United States or its agents; or

(2) A covered claim for property loss or damage to the United States exceeds the amount of financial responsibility required under § 440.9(e) and does not result from willful misconduct of the permittee.

(e) A licensee's or permittee's failure to comply with any requirement of this part may result in suspension or revocation of a license or permit, and subject the licensee or permittee to civil penalties as provided in part 405 of this chapter.

**§ 440.7 Determination of maximum probable loss.**

(a) The FAA will determine the maximum probable loss (MPL) from covered claims by a third party for bodily injury or property damage, and the United States, its agencies, and its contractors and subcontractors for covered property damage or loss, resulting from a permitted or licensed activity. The maximum probable loss determination forms the basis for financial responsibility requirements issued in a license or permit order.

(b) The FAA issues its determination of maximum probable loss no later than ninety days after a licensee or permittee has requested a determination and submitted all information required by the FAA to make the determination. The FAA will consult with Federal agencies that are involved in, or whose personnel or property are exposed to risk of damage or loss as a result of, a licensed or permitted activity before issuing a license or permit order prescribing financial responsibility requirements, and shall notify the licensee, or permittee, if interagency consultation may delay issuance of the MPL determination.

(c) Appendix A of this part contains information requirements for obtaining a maximum probable loss determination. Any person requesting a determination of maximum probable loss must submit the information required by Appendix A, unless the FAA has waived a requirement. In lieu of submitting required information, a person requesting a maximum probable loss determination may designate and certify certain information previously submitted for a prior determination as complete, valid, and equally applicable to its current request. The requester is responsible for the continuing accuracy and completeness of information submitted under this part and must promptly report any changes in writing.

(d) The FAA will amend a determination of maximum probable loss required under this section at any time prior to completion of licensed or permitted activities as warranted by supplementary information provided to or obtained by the FAA after the MPL determination is issued. Any change in financial responsibility requirements as a result of an amended MPL determination shall be set forth in a license or permit order.

(e) The FAA may make a determination of maximum probable loss at any time other than as set forth in paragraph (b) of this section upon request by any person.

**§ 440.9 Insurance requirements for licensed or permitted activities.**

(a) As a condition of each license or permit, a licensee or permittee must comply with all insurance requirements of this section and of a license or permit issued by the FAA, or otherwise demonstrate the required amount of financial responsibility.

(b) A licensee or permittee must obtain and maintain in effect a policy or policies of liability insurance, in an amount determined by the FAA under paragraph (c) of this section, that protects the following persons as additional insureds to the extent of their respective potential liabilities against covered claims by a third party for bodily injury or property damage

resulting from a licensed or permitted activity:

(1) The licensee or permittee, its customer, and their respective contractors and subcontractors, and the employees of each, involved in a licensed or permitted activity;

(2) The United States, its agencies, and its contractors and subcontractors involved in a licensed or permitted activity; and

(3) Government personnel.

(c) The FAA will prescribe for each licensee or permittee the amount of insurance required to compensate the total of covered third-party claims for bodily injury or property damage resulting from a licensed or permitted activity in connection with any particular launch or reentry. A covered third-party claim includes a claim by the United States, its agencies, and its contractors and subcontractors for damage or loss to property other than property for which insurance is required under paragraph (d) of this section. The amount of insurance required is based upon the FAA's determination of maximum probable loss; however, it will not exceed the lesser of:

(1) $500 million; or

(2) The maximum liability insurance available on the world market at a reasonable cost, as determined by the FAA.

(d) The licensee or permittee must obtain and maintain in effect a policy or policies of insurance, in an amount determined by the FAA under paragraph (e) of this section, that covers claims by the United States, its agencies, and its contractors and subcontractors involved in a licensed or permitted activity for property damage or loss resulting from a licensed or permitted activity. Property covered by this insurance must include all property owned, leased, or occupied by, or within the care, custody, or control of, the United States and its agencies, and its contractors and subcontractors involved in a licensed or permitted activity, at a Federal range facility. Insurance must protect the United States and its agencies, and its contractors and subcontractors involved in a licensed or permitted activity.

(e) The FAA will prescribe for each licensee or permittee the amount of insurance required to compensate claims for property damage under paragraph (d) of this section resulting from a licensed or permitted activity in connection with any particular launch or reentry. The amount of insurance is based upon a determination of maximum probable loss; however, it will not exceed the lesser of:

(1) $100 million; or

(2) The maximum available on the world market at a reasonable cost, as determined by the FAA.

(f) In lieu of a policy of insurance, a licensee or permittee may demonstrate financial responsibility in another manner meeting the terms and conditions for insurance of this part. The licensee or permittee must describe in detail the method proposed for demonstrating financial responsibility and how it ensures that the licensee or permittee is able to cover claims as required under this part.

**§ 440.11 Duration of coverage for suborbital and launch activities; modifications.**

(a) Insurance coverage required under § 440.9, or other form of financial responsibility, shall attach when a licensed or permitted launch activity starts, and remain in full force and effect as follows:

(1) Until completion of licensed or permitted launch activities at a launch site; and

(2) For orbital launch, until the later of—

(i) Thirty days following payload separation, or attempted payload separation in the event of a payload separation anomaly; or

(ii) Thirty days from ignition of the launch vehicle.

(3) For a suborbital launch, until the later of—

(i) Motor impact and payload recovery; or

(ii) The FAA's determination that risk to third parties and Government property as a result of licensed or permitted launch activities is sufficiently small that financial responsibility is no longer necessary. That determination is made through the risk analysis conducted before the launch to determine MPL and specified in a license or permit order.

(b) Financial responsibility required under this part may not be replaced, canceled, changed, withdrawn, or in any way modified to reduce the limits of liability or the extent of coverage, nor expire by its own terms, prior to the time specified in a license or permit order, unless the FAA is notified at least 30 days in advance and expressly approves the modification.

**§ 440.12 Duration of coverage for reentry; modifications.**

(a) For reentry, insurance coverage required under § 440.9, or other form of financial responsibility, shall attach upon commencement of licensed or permitted reentry activities, and remain in full force and effect as follows:

(1) For ground operations, until completion of licensed or permitted reentry activities at the reentry site; and

(2) For other licensed or permitted reentry activities, thirty days from initiation of reentry flight; however, in the event of an abort that results in the reentry vehicle remaining on orbit, insurance shall remain in place until the FAA's determination that risk to third parties and Government property as a result of licensed or permitted reentry activities is sufficiently small that financial responsibility is no longer necessary, as determined by the FAA through the risk analysis conducted to determine MPL and specified in a license or permit order.

(b) Financial responsibility required under this part may not be replaced, canceled, changed, withdrawn, or in any way modified to reduce the limits of liability or the extent of coverage, nor expire by its own terms, prior to the time specified in a license or permit order, unless the FAA is notified at least 30 days in advance and expressly approves the modification.

**§ 440.13 Standard conditions of insurance coverage.**

(a) Insurance obtained under § 440.9 must comply with each of the following terms and conditions of coverage:

(1) Bankruptcy or insolvency of an insured, including any additional insured, shall not relieve an insurer of any of its obligations under any policy.

(2) Policy limits shall apply separately to each occurrence and, for each occurrence to the total of claims arising out of a licensed or permitted activity in connection with any particular launch or reentry.

(3) Except as provided in this section, each policy must pay claims from the first dollar of loss, without regard to any deductible, to the limits of the policy. A licensee or permittee may obtain a policy containing a deductible amount if the amount of the deductible is placed in an escrow account or otherwise demonstrated to be unobligated, unencumbered funds of the licensee or permittee, available to compensate claims at any time claims may arise.

(4) No policy may be invalidated by any action or inaction of the licensee or permittee or any additional insured, even by nonpayment by the licensee or permittee of the policy premium, and each policy must insure the licensee or permittee and each additional insured regardless of any breach or violation of any warranties, declarations, or conditions contained in the policies by the licensee or permittee or any additional insured (other than a breach or violation by the licensee, permittee or

an additional insured, and then only as against that licensee, permittee or additional insured).

(5) Each exclusion from coverage must be specified.

(6) Insurance shall be primary without right of contribution from any other insurance that is carried by the licensee or permittee or any additional insured.

(7) Each policy must expressly provide that all of its provisions, except the policy limits, operate in the same manner as if there were a separate policy with and covering the licensee or permittee and each additional insured.

(8) Each policy must be placed with an insurer of recognized reputation and responsibility that either:

(i) Is licensed to do business in any State, territory, possession of the United States, or the District of Columbia; or

(ii) Includes in each of its policies or insurance obtained under this part a contract clause in which the insurer agrees to submit to the jurisdiction of a court of competent jurisdiction within the United States and designates an authorized agent within the United States for service of legal process on the insurer.

(9) Except as to claims resulting from the willful misconduct of the United States or any of its agents, the insurer shall waive any and all rights of subrogation against each of the parties protected by required insurance.

(b) [Reserved]

**§ 440.15 Demonstration of compliance.**

(a) A licensee or permittee must submit to the FAA evidence of financial responsibility and compliance with allocation of risk requirements under this part, as follows, unless a license or permit order specifies otherwise due to the proximity of the intended date for commencement of licensed or permitted activities:

(1) All reciprocal waiver of claims agreements required under § 440.17(c) must be submitted at least 30 days before the start of any licensed or permitted activity involving a customer, crew member, or space flight participant;

(2) Evidence of insurance must be submitted at least 30 days before commencement of any licensed or permitted activity, and for reentry no less than 30 days before commencement of launch activities involving the reentry licensee;

(3) Evidence of financial responsibility in a form other than insurance, as provided under § 440.9(f), must be submitted at least 60 days before commencement of a licensed or permitted activity; and

(4) Evidence of renewal of insurance or other form of financial responsibility must be submitted at least 30 days in advance of its expiration date.

(b) Upon a complete demonstration of compliance with financial responsibility and allocation of risk requirements under this part, the requirements of this part shall preempt each and any provision in any agreement between the licensee or permittee and an agency of the United States governing access to or use of United States launch or reentry property or launch or reentry services for a licensed or permitted activity which addresses financial responsibility, allocation of risk and related matters covered by 49 U.S.C. 70112, 70113.

(c) A licensee or permittee must demonstrate compliance as follows:

(1) The licensee or permittee must provide proof of the existence of the insurance required by § 440.9 by:

(i) Certifying to the FAA that it has obtained insurance in compliance with the requirements of this part and any applicable license or permit order;

(ii) Filing with the FAA one or more certificates of insurance evidencing insurance coverage by one or more insurers under a currently effective and properly endorsed policy or policies of insurance, applicable to a licensed or permitted activity, on terms and conditions and in amounts prescribed under this part, and specifying policy exclusions;

(iii) In the event of any policy exclusions or limitations of coverage that may be considered usual under § 440.19(c), or for purposes of implementing the Government's waiver of claims for property damage under 49 U.S.C. 70112(b)(2), certifying that insurance covering the excluded risks is not commercially available at reasonable cost; and

(iv) Submitting to the FAA, for signature by the Department on behalf of the United States Government, the waiver of claims and assumption of responsibility agreement required by § 440.17(c), executed by the licensee or permittee and its customer.

(v) Submitting to the FAA, for signature by the Department on behalf of the United States Government, an agreement to waive claims and assume responsibility required by § 440.17(e), executed by each space flight participant.

(vi) Submitting to the FAA, for signature by the Department on behalf of the United States Government, an agreement to waive claims and assume responsibility required by § 440.17(f), executed by each member of the crew.

(2) Any certification required by this section must be signed by a duly authorized officer of the licensee or permittee.

(d) Each certificate of insurance required by paragraph (c)(1)(ii) of this section must be signed by the insurer issuing the policy and accompanied by an opinion of the insurance broker that the insurance obtained by the licensee or permittee complies with all the requirements for insurance of this part and any applicable license or permit order.

(e) The licensee or permittee must maintain, and make available for inspection by the FAA upon request, all required policies of insurance and other documents necessary to demonstrate compliance with this part.

(f) In the event the licensee or permittee demonstrates financial responsibility using means other than insurance, as provided under § 440.9(f), the licensee or permittee must provide proof that it has met the requirements of this part and of a FAA issued license or permit order.

**§ 440.17 Reciprocal waiver of claims requirements.**

(a) As a condition of each license or permit, the licensee or permittee must comply with the reciprocal waiver of claims requirements of this section.

(b) The licensee or permittee shall implement a reciprocal waiver of claims with each of its contractors and subcontractors, each customer and each of the customer's contractors and subcontractors, under which each party waives and releases claims against all the other parties to the waiver and agrees to assume financial responsibility for property damage it sustains and for bodily injury or property damage sustained by its own employees, and to hold harmless and indemnify each other from bodily injury or property damage sustained by its employees, resulting from a licensed or permitted activity, regardless of fault.

(c) For each licensed or permitted activity in which the U.S. Government, any agency, or its contractors and subcontractors is involved or where property insurance is required under § 440.9(d), the Federal Aviation Administration of the Department of Transportation, the licensee or permittee, and its customer shall enter into a three-party reciprocal waiver of claims agreement. The three-party reciprocal waiver of claims shall be in the form set forth in Appendix B, for licensed activity, or Appendix C, for permitted activity, of this part or in a form that satisfies the requirements.

(d) The licensee or permittee, its customer, and the Federal Aviation Administration of the Department of

Transportation on behalf of the United States and its agencies but only to the extent provided in legislation, must agree in any waiver of claims agreement required under this part to indemnify another party to the agreement from claims by the indemnifying party's contractors and subcontractors arising out of the indemnifying party's failure to implement properly the waiver requirement.

(e) For each licensed or permitted activity in which the U.S. Government, any of its agencies, or its contractors and subcontractors are involved, the Federal Aviation Administration of the Department of Transportation and each space flight participant shall enter into or have in place a reciprocal waiver of claims agreement in the form of the agreement in Appendix E of this part or that satisfies its requirements.

(f) For each licensed or permitted launch or reentry in which the U.S. Government, any of its agencies, or its contractors and subcontractors is involved, the Federal Aviation Administration of the Department of Transportation and each crew member shall enter into or have in place a reciprocal waiver of claims agreement in the form of the agreement in Appendix D of this part or that satisfies its requirements.

**§ 440.19 United States payment of excess third-party liability claims.**

(a) The United States pays successful covered claims (including reasonable expenses of litigation or settlement) of a third party against a licensee, a customer, and the contractors and subcontractors of the licensee and the customer, and the employees of each involved in licensed activities, and the contractors and subcontractors of the United States and its agencies, and their employees, involved in licensed activities to the extent provided in an appropriation law or other legislative authority providing for payment of claims in accordance with 49 U.S.C. 70113, and to the extent the total amount of such covered claims arising out of any particular launch or reentry:

(1) Exceeds the amount of insurance required under § 440.9(b); and

(2) Is not more than $1,500,000,000 (as adjusted for inflation occurring after January 1, 1989) above that amount.

(b) Payment by the United States under paragraph (a) of this section shall not be made for any part of such claims for which bodily injury or property damage results from willful misconduct by the party seeking payment.

(c) The United States shall provide for payment of claims by third parties for bodily injury or property damage that are payable under 49 U.S.C. 70113 and not covered by required insurance under § 440.9(b), without regard to the limitation under paragraph (a)(1) of this section, because of an insurance policy exclusion that is usual. A policy exclusion is considered usual only if insurance covering the excluded risk is not commercially available at reasonable rates. The licensee must submit a certification in accordance with § 440.15(c)(1)(iii) of this part for the United States to cover the claims.

(d) Upon the expiration of the policy period prescribed in accordance with § 440.11(a), the United States shall provide for payment of claims that are payable under 49 U.S.C. 70113 from the first dollar of loss up to $1,500,000,000 (as adjusted for inflation occurring after January 1, 1989).

(e) Payment by the United States of excess third-party claims under 49 U.S.C. 70113 shall be subject to:

(1) Prompt notice by the licensee to the FAA that the total amount of claims arising out of licensed activities exceeds, or is likely to exceed, the required amount of financial responsibility. For each claim, the notice must specify the nature, cause, and amount of the claim or lawsuit associated with the claim, and the party or parties who may otherwise be liable for payment of the claim;

(2) Participation or assistance in the defense of the claim or lawsuit by the United States, at its election;

(3) Approval by the FAA of any settlement, or part of a settlement, to be paid by the United States; and

(4) Approval by Congress of a compensation plan prepared by the FAA and submitted by the President.

(f) The FAA will:

(1) Prepare a compensation plan outlining the total amount of claims and meeting the requirements set forth in 49 U.S.C. 70113;

(2) Recommend sources of funds to pay the claims; and

(3) Propose legislation as required to implement the plan.

(g) The FAA may withhold payment of a claim if it finds that the amount is unreasonable, unless it is the final order of a court that has jurisdiction over the matter.

## Appendix A to Part 440—Information Requirements for Obtaining a Maximum Probable Loss Determination for Licensed or Permitted Activities

Any person requesting a maximum probable loss determination shall submit the following information to the FAA, unless the FAA has waived a particular information requirement under 14 CFR 440.7(c):

### Part 1: Information Requirements for Licensed Suborbital and Launch Activities

### I. General Information

A. Mission description.

1. A description of mission parameters, including:

a. Launch trajectory;

b. Orbital inclination; and

c. Orbit altitudes (apogee and perigee).

2. Flight sequence.

3. Staging events and the time for each event.

4. Impact locations.

5. Identification of the launch site facility, including the launch complex on the site, planned date of launch, and launch windows.

6. If the applicant has previously been issued a license or permit to conduct licensed or permitted activities using the same vehicle from the same launch site, a description of any differences planned in the conduct of proposed activities.

B. Launch vehicle description.

1. General description of the launch vehicle and its stages, including dimensions.

2. Description of major systems, including safety systems.

3. Description of rocket motors and type of fuel used.

4. Identification of all propellants to be used and their hazard classification under the Hazardous Materials Table, 49 CFR 172.101.

5. Description of hazardous components.

C. Payload.

1. General description of the payload, including type (e.g., telecommunications, remote sensing), propellants, and hazardous components or materials, such as toxic or radioactive substances.

D. Flight safety system.

1. Identification of any flight safety system (FSS) on the vehicle, including a description of operations and component location on the vehicle.

### II. Pre-Flight Processing Operations

A. General description of pre-flight operations including vehicle processing consisting of an operational flow diagram showing the overall sequence and location of operations, commencing with arrival of vehicle components at the launch site facility through final safety checks and countdown sequence, and designation of hazardous operations, as defined in 14 CFR 440.3. For purposes of these information requirements, payload processing, as opposed to integration, is not a hazardous operation.

B. For each hazardous operation, including but not limited to fueling, solid rocket motor build-up, ordnance installation, ordnance checkout, movement of hazardous materials, and payload integration:

1. Identification of location where each operation will be performed, including each building or facility identified by name or number.

2. Identification of facilities adjacent to the location where each operation will be performed and therefore exposed to risk, identified by name or number.

3. Maximum number of Government personnel and individuals not involved in licensed or permitted activities who may be exposed to risk during each operation. For Government personnel, identification of his or her employer.

4. Identification of launch site policies or requirements applicable to the conduct of operations.

**III. Flight Operations**

A. Identification of launch site facilities exposed to risk during licensed or permitted flight.

B. Identification of accident failure scenarios, probability assessments for each, and estimation of risks to Government personnel, individuals not involved in licensed or permitted activities, and Government property, due to property damage or bodily injury. The estimation of risks for each scenario shall take into account the number of such individuals at risk as a result of lift-off and flight of a launch vehicle (on-range, off-range, and down-range) and specific, unique facilities exposed to risk. Scenarios shall cover the range of launch trajectories, inclinations and orbits for which authorization is sought in the license or permit application.

C. On-orbit risk analysis assessing risks posed by a launch vehicle to operational satellites.

D. Reentry risk analysis assessing risks to Government personnel and individuals not involved in licensed or permitted launch activities as a result of reentering debris or reentry of the launch vehicle or its components.

E. Trajectory data as follows: Nominal and 3-sigma lateral trajectory data in x, y, z and x (dot), y (dot), z (dot) coordinates in one-second intervals, data to be pad-centered with x being along the initial launch azimuth and continuing through impact for suborbital flights, and continuing through orbital insertion or the end of powered flight for orbital flights.

F. Tumble-turn data for guided vehicles only, as follows: For vehicles with gimbaled nozzles, tumble turn data with zeta angles and velocity magnitudes stated. A separate table is required for each combination of fail times (every two to four seconds), and significant nozzle angles (two or more small angles, generally between one and five degrees).

G. Identification of debris lethal areas and the projected number and ballistic coefficient of fragments expected to result from flight termination, initiated either by command or self-destruct mechanism, for lift-off, land overflight, and reentry.

**IV. Post-Flight Processing Operations**

A. General description of post-flight ground operations including overall sequence and location of operations for removal of vehicle components and processing equipment from the launch site facility and for handling of hazardous materials, and designation of hazardous operations.

B. Identification of all facilities used in conducting post-flight processing operations.

C. For each hazardous operation:

1. Identification of location where each operation is performed, including each building or facility identified by name or number.

2. Identification of facilities adjacent to location where each operation is performed and exposed to risk, identified by name or number.

3. Maximum number of Government personnel and individuals not involved in licensed or permitted launch activities that may be exposed to risk during each operation. For Government personnel, identification of his or her employer.

4. Identification of launch site facility policies or requirements applicable to the conduct of operations.

**Part 2: Information Requirements for Licensed Reentry**

**I. General Information**

A. Reentry mission description.

1. A description of mission parameters, including:

a. Orbital inclination; and

b. Orbit altitudes (apogee and perigee).

c. Reentry trajectories.

2. Reentry flight sequences.

3. Reentry initiation events and the time for each event.

4. Nominal landing location, alternative landing sites and contingency abort sites.

5. Identification of landing facilities, (planned date of reentry), and reentry windows.

6. If the applicant has previously been issued a license or permit to conduct reentry activities using the same reentry vehicle to the same reentry site facility, a description of any differences planned in the conduct of proposed activities.

B. Reentry vehicle description.

1. General description of the reentry vehicle, including dimensions.

2. Description of major systems, including safety systems.

3. Description of propulsion system (reentry initiation system) and type of fuel used.

4. Identification of all propellants to be used and their hazard classification under the Hazardous Materials Table, 49 CFR 172.101.

5. Description of hazardous components.

C. Payload.

1. General description of any payload, including type (*e.g.*, telecommunications, remote sensing), propellants, and hazardous components or materials, such as toxic or radioactive substances.

D. Flight termination system or flight safety system.

1. Identification of any flight termination system or flight safety system on the reentry vehicle, including a description of operations and component location on the vehicle.

**II. Flight Operations**

A. Identification of reentry site facilities exposed to risk during vehicle reentry and landing.

B. Identification of accident failure scenarios, probability assessments for each, and estimation of risks to Government personnel, individuals not involved in licensed or permitted reentry activities, and Government property, due to property damage or bodily injury. The estimation of risks for each scenario shall take into account the number of such individuals at risk as a result of reentry (flight) and landing of a reentry vehicle (on-range, off-range, and down-range) and specific, unique facilities exposed to risk. Scenarios shall cover the range of reentry trajectories for which authorization is sought.

C. On-orbit risk analysis assessing risks posed by a reentry vehicle to operational satellites during reentry.

D. Reentry risk analysis assessing risks to Government personnel and individuals not involved in licensed or permitted reentry activities as a result of inadvertent or random reentry of the launch vehicle or its components.

E. Nominal and 3-sigma dispersed trajectories in one-second intervals, from reentry initiation through landing or impact. (Coordinate system will be specified on a case-by-case basis).

F. Three-sigma landing or impact dispersion area in downrange (±) and crossrange (±) measured from the nominal and contingency landing or

impact target. The applicant is responsible for including all significant landing or impact dispersion constituents in the computations of landing or impact dispersion areas. The dispersion constituents should include, but not be limited to: Variation in orbital position and velocity at the reentry initiation time; variation in re-entry initiation time offsets, either early or late; variation in the bodies' ballistic coefficient; position and velocity variation due to winds; and variations in re-entry retro-maneuvers.

G. Malfunction turn data (tumble, trim) for guided (controllable) vehicles. The malfunction turn data shall include the total angle turned by the velocity vector versus turn duration time at one second intervals; the magnitude of the velocity vector versus turn duration time at one second intervals; and an indication on the data where the re-entry body will impact the Earth, or breakup due to aerodynamic loads. A malfunction turn data set is required for each malfunction time. Malfunction turn start times shall not exceed four-second intervals along the trajectory.

H. Identification of debris casualty areas and the projected number and ballistic coefficient of fragments expected to result from each failure mode during reentry, including random reentry.

**III. Post-Flight Processing Operations**

A. General description of post-flight ground operations including overall sequence and location of operations for removal of vehicle and components and processing equipment from the reentry site facility and for handling of hazardous materials, and designation of hazardous operations.

B. Identification of all facilities used in conducting post-flight processing operations.

C. For each hazardous operation:

1. Identification of location where each operation is performed, including each building or facility identified by name or number.

2. Identification of facilities adjacent to location where each operation is performed and exposed to risk, identified by name or number.

3. Maximum number of Government personnel and individuals not involved in licensed or permitted reentry activities who may be exposed to risk during each operation. For Government personnel, identification of his or her employer.

4. Identify and provide reentry site facility policies or requirements applicable to the conduct of operations.

**Part 3: Information Requirements for Permitted Activities**

In addition to the information required in part 437 subpart B, an applicant for an experimental permit must provide, for each permitted pre-flight and post-flight operation, the following information to the FAA:

A. Identification of location where each operation will be performed, including any U.S. Government or third party facilities identified by name or number.

B. Identification of any U.S. Government or third party facilities adjacent to the location where each operation will be performed and therefore exposed to risk, identified by name or number.

C. Maximum number of Government personnel and individuals not involved in permitted activities that may be exposed to risk during each operation. For Government personnel, identification of his or her employer.

**Appendix B to Part 440—Agreement for Waiver of Claims and Assumption of Responsibility for Licensed Launch or Reentry**

**Part 1—Waiver of Claims and Assumption of Responsibility for Licensed Launches**

This agreement is entered into this ____day of ____, by and among [Licensee] (the ''Licensee''), [Customer] (the ''Customer'') and the Federal Aviation Administration of the Department of Transportation, on behalf of the United States Government (collectively, the ''Parties''), to implement the provisions of section 440.17(c) of the Commercial Space Transportation Licensing Regulations, 14 CFR Ch. III (the ''Regulations'').

In consideration of the mutual releases and promises contained herein, the Parties hereby agree as follows:

*1. Definitions*

*Customer* means the above-named Customer on behalf of the Customer and any person described in § 440.3 of the Regulations.

*License* means License No. _____issued on _____, by the Associate Administrator for Commercial Space Transportation, Federal Aviation Administration, Department of Transportation, to the Licensee, including all license orders issued in connection with the License.

*Licensee* means the Licensee and any transferee of the Licensee under 49 U.S.C. Subtitle IX, ch. 701.

*United States* means the United States and its agencies involved in Licensed Launch Activities.

Except as otherwise defined herein, terms used in this Agreement and defined in 49 U.S.C. Subtitle IX, ch. 701—Commercial Space Launch Activities, or in the Regulations, shall have the same meaning as contained in 49 U.S.C. Subtitle IX, ch. 701, or the Regulations, respectively.

*2. Waiver and Release of Claims*

(a) Licensee hereby waives and releases claims it may have against Customer and the United States, and against their respective Contractors and Subcontractors, for Property Damage it sustains and for Bodily Injury or Property Damage sustained by its own employees, resulting from Licensed Launch Activities, regardless of fault.

(b) Customer hereby waives and releases claims it may have against Licensee and the United States, and against their respective Contractors and Subcontractors, for Property Damage it sustains and for Bodily Injury or Property Damage sustained by its own employees, resulting from Licensed Launch Activities, regardless of fault.

(c) The United States hereby waives and releases claims it may have against Licensee and Customer, and against their respective Contractors and Subcontractors, for Property Damage it sustains, and for Bodily Injury or Property Damage sustained by its own employees, resulting from Licensed Launch Activities, regardless of fault, to the extent that claims it would otherwise have for such damage or injury exceed the amount of insurance or demonstration of financial responsibility required under sections 440.9(c) and (e), respectively, of the Regulations.

*3. Assumption of Responsibility*

(a) Licensee and Customer shall each be responsible for Property Damage it sustains and for Bodily Injury or Property Damage sustained by its own employees, resulting from Licensed Launch Activities, regardless of fault. Licensee and Customer shall each hold harmless and indemnify each other, the United States, and the Contractors and Subcontractors of each Party, for Bodily Injury or Property Damage sustained by its own employees, resulting from Licensed Launch Activities, regardless of fault.

(b) The United States shall be responsible for Property Damage it sustains, and for Bodily Injury or Property Damage sustained by its own employees, resulting from Licensed Launch Activities, regardless of fault, to the extent that claims it would otherwise have for such damage or injury exceed the amount of insurance

or demonstration of financial responsibility required under sections 440.9(c) and (e), respectively, of the Regulations.

*4. Extension of Assumption of Responsibility and Waiver*

(a) Licensee shall extend the requirements of the waiver and release of claims, and the assumption of responsibility, hold harmless, and indemnification, as set forth in paragraphs 2(a) and 3(a), respectively, to its Contractors and Subcontractors by requiring them to waive and release all claims they may have against Customer and the United States, and against the respective Contractors and Subcontractors of each, and to agree to be responsible, for Property Damage they sustain and to be responsible, hold harmless and indemnify Customer and the United States, and the respective Contractors and Subcontractors of each, for Bodily Injury or Property Damage sustained by their own employees, resulting from Licensed Launch Activities, regardless of fault.

(b) Customer shall extend the requirements of the waiver and release of claims, and the assumption of responsibility, hold harmless, and indemnification, as set forth in paragraphs 2(b) and 3(a), respectively, to its Contractors and Subcontractors by requiring them to waive and release all claims they may have against Licensee and the United States, and against the respective Contractors and Subcontractors of each, and to agree to be responsible, for Property Damage they sustain and to be responsible, hold harmless and indemnify Licensee and the United States, and the respective Contractors and Subcontractors of each, for Bodily Injury or Property Damage sustained by their own employees, resulting from Licensed Launch Activities, regardless of fault.

(c) The United States shall extend the requirements of the waiver and release of claims, and the assumption of responsibility as set forth in paragraphs 2(c) and 3(b), respectively, to its Contractors and Subcontractors by requiring them to waive and release all claims they may have against Licensee and Customer, and against the respective Contractors and Subcontractors of each, and to agree to be responsible, for any Property Damage they sustain and for any Bodily Injury or Property Damage sustained by their own employees, resulting from Licensed Launch Activities, regardless of fault, to the extent that claims they would otherwise have for such damage or injury exceed the amount of insurance or demonstration of financial responsibility required under sections 440.9(c) and (e), respectively, of the Regulations.

*5. Indemnification*

(a) Licensee shall hold harmless and indemnify Customer and its directors, officers, servants, agents, subsidiaries, employees and assignees, or any or them, and the United States and its agencies, servants, agents, subsidiaries, employees and assignees, or any or them, from and against liability, loss or damage arising out of claims that Licensee's Contractors and Subcontractors may have for Property Damage sustained by them and for Bodily Injury or Property Damage sustained by their employees, resulting from Licensed Launch Activities.

(b) Customer shall hold harmless and indemnify Licensee and its directors, officers, servants, agents, subsidiaries, employees and assignees, or any or them, and the United States and its agencies, servants, agents, subsidiaries, employees and assignees, or any of them, from and against liability, loss or damage arising out of claims that Customer's Contractors and Subcontractors, or any person on whose behalf Customer enters into this Agreement, may have for Property Damage sustained by them and for Bodily Injury or Property Damage sustained by their employees, resulting from Licensed Launch Activities.

(c) To the extent provided in advance in an appropriations law or to the extent there is enacted additional legislative authority providing for the payment of claims, the United States shall hold harmless and indemnify Licensee and Customer and their respective directors, officers, servants, agents, subsidiaries, employees and assignees, or any of them, from and against liability, loss or damage arising out of claims that Contractors and Subcontractors of the United States may have for Property Damage sustained by them, and for Bodily Injury or Property Damage sustained by their employees, resulting from Licensed Launch Activities, to the extent that claims they would otherwise have for such damage or injury exceed the amount of insurance or demonstration of financial responsibility required under sections 440.9(c) and (e), respectively, of the Regulations.

*6. Assurances Under 49 U.S.C. 70112(e)*

Notwithstanding any provision of this Agreement to the contrary, Licensee shall hold harmless and indemnify the United States and its agencies, servants, agents, employees and assignees, or any of them, from and against liability, loss or damage arising out of claims for Bodily Injury or Property Damage, resulting from Licensed Launch Activities, regardless of fault, except to the extent that: (i) As provided in section 7(b) of this Agreement, claims result from willful misconduct of the United States or its agents; (ii) claims for Property Damage sustained by the United States or its Contractors and Subcontractors exceed the amount of insurance or demonstration of financial responsibility required under section 440.9(e) of the Regulations; (iii) claims by a Third Party for Bodily Injury or Property Damage exceed the amount of insurance or demonstration of financial responsibility required under section 440.9(c) of the Regulations, and do not exceed $1,500,000,000 (as adjusted for inflation after January 1, 1989) above such amount, and are payable pursuant to the provisions of 49 U.S.C. 70113 and section 440.19 of the Regulations; or (iv) Licensee has no liability for claims exceeding $1,500,000,000 (as adjusted for inflation after January 1, 1989) above the amount of insurance or demonstration of financial responsibility required under section 440.9(c) of the Regulations.

*7. Miscellaneous*

(a) Nothing contained herein shall be construed as a waiver or release by Licensee, Customer or the United States of any claim by an employee of the Licensee, Customer or the United States, respectively, including a member of the Armed Forces of the United States, for Bodily Injury or Property Damage, resulting from Licensed Launch Activities.

(b) Notwithstanding any provision of this Agreement to the contrary, any waiver, release, assumption of responsibility or agreement to hold harmless and indemnify herein shall not apply to claims for Bodily Injury or Property Damage resulting from willful misconduct of any of the Parties, the Contractors and Subcontractors of any of the Parties, and in the case of Licensee and Customer and the Contractors and Subcontractors of each of them, the directors, officers, agents and employees of any of the foregoing, and in the case of the United States, its agents.

(c) In the event that more than one customer is involved in Licensed Launch Activities, references herein to Customer shall apply to, and be deemed to include, each such customer severally and not jointly.

(d) This Agreement shall be governed by and construed in accordance with United States Federal law.

*In Witness Whereof,* the Parties to this Agreement have caused the Agreement to be duly executed by their respective duly authorized representatives as of the date written above.

Licensee

By: _____

Its: _____

Customer

By: _____

Its: _____

Federal Aviation Administration of the Department of Transportation on Behalf of the United States Government

By: _____

Its: _____

Associate Administrator for Commercial Space Transportation

**Part 2—Waiver of Claims and Assumption of Responsibility for Licensed Reentries**

This Agreement is entered into this ____ day of ____, by and among [Licensee] (the ''Licensee''), [Customer] (the ''Customer''), and the Federal Aviation Administration of the Department of Transportation, on behalf of the United States Government (collectively, the ''Parties''), to implement the provisions of § 440.17(c) of the Commercial Space Transportation Licensing Regulations, 14 CFR Ch. III (the ''Regulations'').

In consideration of the mutual releases and promises contained herein, the Parties hereby agree as follows:

*1. Definitions*

*Contractors and Subcontractors* means entities described in § 440.3 of the Regulations.

*Customer* means the above-named Customer on behalf of the Customer and any person described in § 440.3 of the Regulations.

*License* means License No. _____ issued on _____, by the Associate Administrator for Commercial Space Transportation, Federal Aviation Administration, Department of Transportation, to the Licensee, including all license orders issued in connection with the License.

*Licensee* means the Licensee and any transferee of the Licensee under 49 U.S.C. Subtitle IX, ch. 701.

*United States* means the United States and its agencies involved in Licensed Activities.

Except as otherwise defined herein, terms used in this Agreement and defined in 49 U.S.C. Subtitle IX, ch. 701—Commercial Space Launch Activities, or in the Regulations, shall have the same meaning as contained in 49 U.S.C. Subtitle IX, ch. 701, or the Regulations, respectively.

*2. Waiver and Release of Claims*

(a) Licensee hereby waives and releases claims it may have against Customer and the United States, and against their respective Contractors and Subcontractors, for Property Damage it sustains and for Bodily Injury or Property Damage sustained by its own employees, resulting from Licensed Activities, regardless of fault.

(b) Customer hereby waives and releases claims it may have against Licensee and the United States, and against their respective Contractors and Subcontractors, for Property Damage it sustains and for Bodily Injury or Property Damage sustained by its own employees, resulting from Licensed Activities, regardless of fault.

(c) The United States hereby waives and releases claims it may have against Licensee and Customer, and against their respective Contractors and Subcontractors, for Property Damage it sustains, and for Bodily Injury or Property Damage sustained by its own employees, resulting from Licensed Activities, regardless of fault, to the extent that claims it would otherwise have for such damage or injury exceed the amount of insurance or demonstration of financial responsibility required under sections 440.9(c) and (e) of the Regulations.

*3. Assumption of Responsibility*

(a) Licensee and Customer shall each be responsible for Property Damage it sustains and for Bodily Injury or Property Damage sustained by its own employees, resulting from Licensed Activities, regardless of fault. Licensee and Customer shall each hold harmless and indemnify each other, the United States, and the Contractors and Subcontractors of each Party, for Bodily Injury or Property Damage sustained by its own employees, resulting from Licensed Activities, regardless of fault.

(b) The United States shall be responsible for Property Damage it sustains, and for Bodily Injury or Property Damage sustained by its own employees, resulting from Licensed Activities, regardless of fault, to the extent that claims it would otherwise have for such damage or injury exceed the amount of insurance or demonstration of financial responsibility required under §§ 440.9(c) and (e) of the Regulations.

*4. Extension of Assumption of Responsibility and Waiver*

(a) Licensee shall extend the requirements of the waiver and release of claims, and the assumption of responsibility, hold harmless, and indemnification, as set forth in paragraphs 2(a) and 3(a), respectively, to its Contractors and Subcontractors by requiring them to waive and release all claims they may have against Customer and the United States, and against the respective Contractors and Subcontractors of each, and to agree to be responsible, for Property Damage they sustain and to be responsible, hold harmless and indemnify Customer and the United States, and the respective Contractors and Subcontractors of each, for Bodily Injury or Property Damage sustained by their own employees, resulting from Licensed Activities, regardless of fault.

(b) Customer shall extend the requirements of the waiver and release of claims, and the assumption of responsibility, hold harmless, and indemnification, as set forth in paragraphs 2(b) and 3(a), respectively, to its Contractors and Subcontractors by requiring them to waive and release all claims they may have against Licensee and the United States, and against the respective Contractors and Subcontractors of each, and to agree to be responsible, for Property Damage they sustain and to be responsible, hold harmless and indemnify Licensee and the United States, and the respective Contractors and Subcontractors of each, for Bodily Injury or Property Damage sustained by their own employees, resulting from Licensed Activities, regardless of fault.

(c) The United States shall extend the requirements of the waiver and release of claims, and the assumption of responsibility as set forth in paragraphs 2(c) and 3(b), respectively, to its Contractors and Subcontractors by requiring them to waive and release all claims they may have against Licensee and Customer, and against the respective Contractors and Subcontractors of each, and to agree to be responsible, for any Property Damage they sustain and for any Bodily Injury or Property Damage sustained by their own employees, resulting from Licensed Activities, regardless of fault, to the extent that claims they would otherwise have for such damage or injury exceed the amount of insurance or demonstration of financial responsibility required under §§ 440.9(c) and (e) of the Regulations.

*5. Indemnification*

(a) Licensee shall hold harmless and indemnify Customer and its directors, officers, servants, agents, subsidiaries, employees and assignees, or any or them, and the United States and its agencies, servants, agents, subsidiaries, employees and assignees, or any or them, from and against liability, loss or damage arising out of claims that Licensee's Contractors and Subcontractors may have for Property Damage sustained by them and for Bodily Injury or Property Damage sustained by their employees, resulting from Licensed Activities.

(b) Customer shall hold harmless and indemnify Licensee and its directors, officers, servants, agents, subsidiaries, employees and assignees, or any of them, and the United States and its agencies, servants, agents, subsidiaries, employees assignees, or any of them, from and against liability, loss or damage arising out of claims that Customer's Contractors and Subcontractors, or any person on whose behalf Customer enters into this Agreement, may have for Property Damage sustained by them and for Bodily Injury or Property Damage sustained by their employees, resulting from Licensed Activities.

(c) To the extent provided in advance in an appropriations law or to the extent there is enacted additional legislative authority providing for the payment of claims, the United States shall hold harmless and indemnify Licensee and Customer and their respective directors, officers, servants, agents, subsidiaries, employees and assignees, or any of them, from and against liability, loss or damage arising out of claims that Contractors and Subcontractors of the United States may have for Property Damage sustained by them, and for Bodily Injury or Property Damage sustained by their employees, resulting from Licensed Activities, to the extent that claims they would otherwise have for such damage or injury exceed the amount of insurance or demonstration of financial responsibility required under §§ 440.9(c) and (e) of the Regulations.

*6. Assurances Under 49 U.S.C. 70112(e)*

Notwithstanding any provision of this Agreement to the contrary, Licensee shall hold harmless and indemnify the United States and its agencies, servants, agents, employees and assignees, or any of them, from and against liability, loss or damage arising out of claims for Bodily Injury or Property Damage, resulting from Licensed Launch Activities, regardless of fault, except to the extent that: (i) As provided in section 7(b) of this Agreement, claims result from willful misconduct of the United States or its agents; (ii) claims for Property Damage sustained by the United States or its Contractors and Subcontractors exceed the amount of insurance or demonstration of financial responsibility required under § 440.9(e) of the Regulations; (iii) claims by a Third Party for Bodily Injury or Property Damage exceed the amount of insurance or demonstration of financial responsibility required under § 440.9(c) of the Regulations, and do not exceed $1,500,000,000 (as adjusted for inflation after January 1, 1989) above such amount, and are payable pursuant to the provisions of 49 U.S.C. 70113 and § 440.19 of the Regulations; or (iv) Licensee has no liability for claims exceeding $1,500,000,000 (as adjusted for inflation after January 1, 1989) above the amount of insurance or demonstration of financial responsibility required under § 440.9(c) of the Regulations.

*7. Miscellaneous*

(a) Nothing contained herein shall be construed as a waiver or release by Licensee, Customer or the United States of any claim by an employee of the Licensee, Customer or the United States, respectively, including a member of the Armed Forces of the United States, for Bodily Injury or Property Damage, resulting form Licensed Activities.

(b) Notwithstanding any provision of this Agreement to the contrary, any waiver, release, assumption of responsibility or agreement to hold harmless and indemnify herein shall not apply to claims for Bodily Injury or Property Damage resulting from willful misconduct of any of the Parties, the Contractors and Subcontractors of any of the Parties, and in the case of Licensee and Customer and the Contractors and Subcontractors of each of them, the directors, officers, agents and employees of any of the foregoing, and in the case of the United States, its agents.

(c) In the event that more than one customer is involved in Licensed Activities, references herein to Customer shall apply to, and be deemed to include, each such customer severally and not jointly.

(d) This Agreement shall be governed by and construed in accordance with United States Federal law.

In Witness Whereof, the Parties to this Agreement have caused the Agreement to be duly executed by their respective duly authorized representatives as of the date written above.

Licensee

By: _____
Its:_____

Customer

By: _____
Its: _____

Federal Aviation Administration of the Department of Transportation on Behalf of the United States Government

By: _____
Its: _____

Associate Administrator for Commercial Space Transportation

**Appendix C to Part 440—Agreement for Waiver of Claims and Assumption of Responsibility for Permitted Activities**

THIS AGREEMENT is entered into this _____ day of _____, by and among [Permittee] (the ''Permittee''), [Customer] (the ''Customer'') and the Federal Aviation Administration of the Department of Transportation, on behalf of the United States Government (collectively, the ''Parties''), to implement the provisions of section 440.17(c) of the Commercial Space Transportation Licensing Regulations, 14 CFR Ch. III (the ''Regulations'').

In consideration of the mutual releases and promises contained herein, the Parties hereby agree as follows:

*1. Definitions*

*Customer* means the above-named Customer on behalf of the Customer and any person described in § 440.3 of the Regulations.

*Permit* means Permit No. _____ issued on _____, by the Associate Administrator for Commercial Space Transportation, Federal Aviation Administration, Department of Transportation, to the Permittee, including all permit orders issued in connection with the Permit.

*Permittee* means the holder of the Permit issued under 49 U.S.C. Subtitle IX, ch. 701.

*United States* means the United States and its agencies involved in Permitted Permit Activities.

Except as otherwise defined herein, terms used in this Agreement and defined in 49 U.S.C. Subtitle IX, ch. 701—Commercial Space Launch Activities, or in the Regulations, shall have the same meaning as contained in 49 U.S.C. Subtitle IX, ch. 701, or the Regulations, respectively.

*2. Waiver and Release of Claims*

(a) Permittee hereby waives and releases claims it may have against Customer and the United States, and

against their respective Contractors and Subcontractors, for Property Damage it sustains and for Bodily Injury or Property Damage sustained by its own employees, resulting from Permitted Activities, regardless of fault.

(b) Customer hereby waives and releases claims it may have against Permittee and the United States, and against their respective Contractors and Subcontractors, for Property Damage it sustains and for Bodily Injury or Property Damage sustained by its own employees, resulting from Permitted Activities, regardless of fault.

(c) The United States hereby waives and releases claims it may have against Permittee and Customer, and against their respective Contractors and Subcontractors, for Property Damage it sustains resulting from Permitted Activities, regardless of fault, to the extent that claims it would otherwise have for such damage exceed the amount of insurance or demonstration of financial responsibility required under section 440.9(e) of the Regulations.

*3. Assumption of Responsibility*

(a) Permittee and Customer shall each be responsible for Property Damage it sustains and for Bodily Injury or Property Damage sustained by its own employees, resulting from Permitted Activities, regardless of fault. Permittee and Customer shall each hold harmless and indemnify each other, the United States, and the Contractors and Subcontractors of each Party, for Bodily Injury or Property Damage sustained by its own employees, resulting from Permitted Activities, regardless of fault.

(b) The United States shall be responsible for Property Damage it sustains, resulting from Permitted Activities, regardless of fault, to the extent that claims it would otherwise have for such damage exceed the amount of insurance or demonstration of financial responsibility required under section 440.9(e) of the Regulations.

*4. Extension of Assumption of Responsibility and Waiver*

(a) Permittee shall extend the requirements of the waiver and release of claims, and the assumption of responsibility, hold harmless, and indemnification, as set forth in paragraphs 2(a) and 3(a), respectively, to its Contractors and Subcontractors by requiring them to waive and release all claims they may have against Customer and the United States, and against the respective Contractors and Subcontractors of each, and to agree to be responsible, for Property Damage they sustain and to be responsible, hold harmless and indemnify Customer and the United States, and the respective Contractors and Subcontractors of each, for Bodily Injury or Property Damage sustained by their own employees, resulting from Permitted Activities, regardless of fault.

(b) Customer shall extend the requirements of the waiver and release of claims, and the assumption of responsibility, hold harmless, and indemnification, as set forth in paragraphs 2(b) and 3(a), respectively, to its Contractors and Subcontractors by requiring them to waive and release all claims they may have against Permittee and the United States, and against the respective Contractors and Subcontractors of each, and to agree to be responsible for Property Damage they sustain and to be responsible, hold harmless and indemnify Permittee and the United States, and the respective Contractors and Subcontractors of each, for Bodily Injury or Property Damage sustained by their own employees, resulting from Permitted Activities, regardless of fault.

(c) The United States shall extend the requirements of the waiver and release of claims, and the assumption of responsibility as set forth in paragraphs 2(c) and 3(b), respectively, to its Contractors and Subcontractors by requiring them to waive and release all claims they may have against Permittee and Customer, and against the respective Contractors and Subcontractors of each, and to agree to be responsible for any Property Damage they sustain, resulting from Permitted Activities, regardless of fault, to the extent that claims they would otherwise have for such damage exceed the amount of insurance or demonstration of financial responsibility required under section 440.9(e) of the Regulations.

*5. Indemnification*

(a) Permittee shall hold harmless and indemnify Customer and its directors, officers, servants, agents, subsidiaries, employees and assignees, or any or them, and the United States and its agencies, servants, agents, subsidiaries, employees and assignees, or any or them, from and against liability, loss or damage arising out of claims that Permittee's Contractors and Subcontractors may have for Property Damage sustained by them and for Bodily Injury or Property Damage sustained by their employees, resulting from Permitted Activities.

(b) Customer shall hold harmless and indemnify Permittee and its directors, officers, servants, agents, subsidiaries, employees and assignees, or any or them, and the United States and its agencies, servants, agents, subsidiaries, employees and assignees, or any of them, from and against liability, loss or damage arising out of claims that Customer's Contractors and Subcontractors, or any person on whose behalf Customer enters into this Agreement, may have for Property Damage sustained by them and for Bodily Injury or Property Damage sustained by their employees, resulting from Permitted Activities.

*6. Assurances Under 49 U.S.C. 70112(e)*

Notwithstanding any provision of this Agreement to the contrary, Permittee shall hold harmless and indemnify the United States and its agencies, servants, agents, employees and assignees, or any of them, from and against liability, loss or damage arising out of claims for Bodily Injury or Property Damage, resulting from Permitted Activities, regardless of fault, except to the extent that it is provided in section 7(b) of this Agreement, except to the extent that claims (i) result from willful misconduct of the United States or its agents and (ii) for Property Damage sustained by the United States or its Contractors and Subcontractors exceed the amount of insurance or demonstration of financial responsibility required under section 440.9(e) of the Regulations.

*7. Miscellaneous*

(a) Nothing contained herein shall be construed as a waiver or release by Permittee, Customer or the United States of any claim by an employee of the Permittee, Customer or the United States, respectively, including a member of the Armed Forces of the United States, for Bodily Injury or Property Damage, resulting from Permitted Activities.

(b) Notwithstanding any provision of this Agreement to the contrary, any waiver, release, assumption of responsibility or agreement to hold harmless and indemnify herein shall not apply to claims for Bodily Injury or Property Damage resulting from willful misconduct of any of the Parties, the Contractors and Subcontractors of any of the Parties, and in the case of Permittee and Customer and the Contractors and Subcontractors of each of them, the directors, officers, agents and employees of any of the foregoing, and in the case of the United States, its agents.

(c) In the event that more than one customer is involved in Permitted Activities, references herein to Customer shall apply to, and be deemed

to include, each such customer severally and not jointly.

(d) This Agreement shall be governed by and construed in accordance with United States Federal law.

*In witness whereof*, the Parties to this Agreement have caused the Agreement to be duly executed by their respective duly authorized representatives as of the date written above.

Permittee

By: _____

Its: _____

Customer

By: _____

Its: _____

Federal Aviation Administration of the Department of Transportation on Behalf of the United States Government

By: _____

Its: _____

Associate Administrator for Commercial Space Transportation

**Appendix D to Part 440—Agreement for Waiver of Claims and Assumption of Responsibility for a Crew Member**

This agreement is entered into this _____ day of _____, by and among [crew member] (the ''Crew Member'') and the Federal Aviation Administration of the Department of Transportation, on behalf of the United States Government (collectively, the ''Parties''), to implement the provisions of section 440.17(f) of the Commercial Space Transportation Licensing Regulations, 14 CFR Ch. III (the ''Regulations''). In consideration of the mutual releases and promises contained herein, the Parties hereby agree as follows:

*1. Definitions*

*Crew member* means the above-named crew member.

*License/Permit* means License/Permit No. _____ issued on _____, by the Associate Administrator for Commercial Space Transportation, Federal Aviation Administration, Department of Transportation, to the Licensee/Permittee, including all license/permit orders issued in connection with the License/Permit.

*Licensee/Permittee* means the Licensee/Permittee and any transferee of the Licensee under 49 U.S.C. Subtitle IX, ch. 701.

*United States* means the United States and its agencies involved in Licensed/Permitted Activities.

Except as otherwise defined herein, terms used in this Agreement and defined in 49 U.S.C. Subtitle IX, ch. 701—Commercial Space Launch Activities, or in the Regulations, shall have the same meaning as contained in 49 U.S.C. Subtitle IX, ch. 701, or the Regulations, respectively.

*2. Waiver and Release of Claims*

(a) Crew member hereby waives and releases claims it may have against the United States, and against their respective Contractors and Subcontractors, for Bodily Injury or Property Damage sustained, resulting from Licensed/Permitted Activities, regardless of fault.

(b) The United States hereby waives and releases claims it may have against the crew member for Property Damage it sustains, and for Bodily Injury or Property Damage sustained by its own employees, resulting from Licensed/Permitted Activities, regardless of fault.

*3. Assumption of Responsibility*

(a) The crew member shall be responsible for Bodily Injury or Property Damage sustained, resulting from Licensed/Permitted Activities, regardless of fault. The crew member shall hold harmless and indemnify the United States, and the Contractors and Subcontractors of each Party, for Bodily Injury or Property Damage sustained by its own employees, resulting from Licensed/Permitted Activities, regardless of fault.

(b) The United States shall be responsible for Property Damage it sustains, and for Bodily Injury or Property Damage sustained by its own employees, resulting from Licensed Activities, regardless of fault, to the extent that claims it would otherwise have for such damage or injury exceed the amount of insurance or demonstration of financial responsibility required under sections 440.9(c) and (e), respectively, of the Regulations.

(c) The United States shall be responsible for Property Damage it sustains, resulting from Permitted Activities, regardless of fault, to the extent that claims it would otherwise have for such damage exceed the amount of insurance or demonstration of financial responsibility required under section 440.9(e) of the Regulations.

*4. Extension of Assumption of Responsibility and Waiver*

(a) The United States shall extend the requirements of the waiver and release of claims, and the assumption of responsibility as set forth in paragraphs 2(b) and 3(b), respectively, to its Contractors and Subcontractors by requiring them to waive and release all claims they may have against the crew member and to agree to be responsible for any Property Damage they sustain and for any Bodily Injury or Property Damage sustained by their own employees, resulting from Licensed Activities, regardless of fault.

(b) The United States shall extend the requirements of the waiver and release of claims, and the assumption of responsibility as set forth in paragraphs 2(b) and 3(c), respectively, to its Contractors and Subcontractors by requiring them to waive and release all claims they may have against the crew member and to agree to be responsible for any Property Damage they sustain, resulting from Permitted Activities, regardless of fault.

*5. Assurances Under 49 U.S.C. 70112(e)*

Notwithstanding any provision of this Agreement to the contrary, the crew member shall hold harmless the United States and its agencies, servants, agents, employees and assignees, or any of them, from and against liability, loss or damage arising out of claims for Bodily Injury or Property Damage, resulting from Licensed/Permitted Activities, regardless of fault, except to the extent that, as provided in section 6(b) of this Agreement, claims result from willful misconduct of the United States or its agents.

*6. Miscellaneous*

(a) Nothing contained herein shall be construed as a waiver or release by the United States of any claim by an employee of the United States, respectively, including a member of the Armed Forces of the United States, for Bodily Injury or Property Damage, resulting from Licensed/Permitted Activities.

(b) Notwithstanding any provision of this Agreement to the contrary, any waiver, release, assumption of responsibility or agreement to hold harmless and indemnify herein shall not apply to claims for Bodily Injury or Property Damage resulting from willful misconduct of any of the Parties, the Contractors and Subcontractors of any of the Parties, and in the case of the United States, its agents.

(c) This Agreement shall be governed by and construed in accordance with United States Federal law.

*In witness whereof*, the Parties to this Agreement have caused the Agreement to be duly executed by their respective duly authorized representatives as of the date written above.

Crew Member

Signature: _____

Printed Name: _____

Federal Aviation Administration of the Department of Transportation on Behalf of the United States Government

By: _____
Its: _____

Associate Administrator for Commercial Space Transportation

**Appendix E to Part 440—Agreement for Waiver of Claims and Assumption of Responsibility for a Space Flight Participant**

THIS AGREEMENT is entered into this _____ day of _____, by and among [Space Flight Participant] (the ''Space Flight Participant'') and the Federal Aviation Administration of the Department of Transportation, on behalf of the United States Government (collectively, the ''Parties''), to implement the provisions of section 440.17(e) of the Commercial Space Transportation Licensing Regulations, 14 CFR Ch. III (the ''Regulations'').

In consideration of the mutual releases and promises contained herein, the Parties hereby agree as follows:

*1. Definitions*

*Space Flight Participant* means the above-named Space Flight Participant, who is not crew, and is carried within a launch or reentry vehicle.

*License/Permit* means License/Permit No. _____ issued on _____, by the Associate Administrator for Commercial Space Transportation, Federal Aviation Administration, Department of Transportation, to the Licensee/Permittee, including all license/permit orders issued in connection with the License/Permit.

*Licensee/Permittee* means the Licensee/Permittee and any transferee of the Licensee under 49 U.S.C. Subtitle IX, ch. 701.

*United States* means the United States and its agencies involved in Licensed/Permitted Activities.

Except as otherwise defined herein, terms used in this Agreement and defined in 49 U.S.C. Subtitle IX, ch. 701—Commercial Space Launch Activities, or in the Regulations, shall have the same meaning as contained in 49 U.S.C. Subtitle IX, ch. 701, or the Regulations, respectively.

*2. Waiver and Release of Claims*

(a) Space Flight Participant hereby waives and releases claims it may have against the United States, and against its respective Contractors and Subcontractors, for Bodily Injury or Property Damage resulting from Licensed/Permitted Activities, regardless of fault.

(b) The United States hereby waives and releases claims it may have against Space Flight Participant for Property Damage it sustains, and for Bodily Injury or Property Damage sustained by its own employees, resulting from Licensed/Permitted Activities, regardless of fault.

*3. Assumption of Responsibility*

(a) Space Flight Participant shall each be responsible for Bodily Injury or Property Damage sustained resulting from Licensed/Permitted Activities, regardless of fault. Space Flight Participant shall hold harmless and indemnify the United States, and its Contractors and Subcontractors, for Bodily Injury or Property Damage sustained from Licensed/Permitted Activities, regardless of fault.

(b) The United States shall be responsible for Property Damage it sustains, and for Bodily Injury or Property Damage sustained by its own employees, resulting from Licensed Activities, regardless of fault, to the extent that claims it would otherwise have for such damage or injury exceed the amount of insurance or demonstration of financial responsibility required under sections 440.9(c) and (e), respectively, of the Regulations.

(c) The United States shall be responsible for Property Damage it sustains, resulting from Permitted Activities, regardless of fault, to the extent that claims it would otherwise have for such damage exceed the amount of insurance or demonstration of financial responsibility required under section 440.9(e) of the Regulations.

*4. Extension of Assumption of Responsibility and Waiver*

(a) The United States shall extend the requirements of the waiver and release of claims, and the assumption of responsibility as set forth in paragraphs 2(b) and 3(b), respectively, to its Contractors and Subcontractors by requiring them to waive and release all claims they may have against Space Flight Participant, and to agree to be responsible, for any Property Damage they sustain and for any Bodily Injury or Property Damage sustained by their own employees, resulting from Licensed Activities, regardless of fault.

(b) The United States shall extend the requirements of the waiver and release of claims, and the assumption of responsibility as set forth in paragraphs 2(b) and 3(c), respectively, to its Contractors and Subcontractors by requiring them to waive and release all claims they may have against the crew member and to agree to be responsible, for any Property Damage they sustain, resulting from Permitted Activities, regardless of fault.

*5. Assurances Under 49 U.S.C. 70112(e)*

Notwithstanding any provision of this Agreement to the contrary, Space Flight Participant shall hold harmless the United States and its agencies, servants, agents, employees and assignees, or any of them, from and against liability, loss or damage arising out of claims for Bodily Injury or Property Damage, resulting from Licensed/Permitted Activities, regardless of fault, except to the extent that, as provided in section 6(b) of this Agreement, claims result from willful misconduct of the United States or its agents.

*6. Miscellaneous*

(a) Nothing contained herein shall be construed as a waiver or release by Space Flight Participant or the United States of any claim by an employee of the Space Flight Participant or the United States, respectively, including a member of the Armed Forces of the United States, for Bodily Injury or Property Damage, resulting from Licensed/Permitted Activities.

(b) Notwithstanding any provision of this Agreement to the contrary, any waiver, release, assumption of responsibility or agreement to hold harmless and indemnify herein shall not apply to claims for Bodily Injury or Property Damage resulting from willful misconduct of any of the Parties, the Contractors, Subcontractors, and agents of the United States, and Space Flight Participant.

(c) This Agreement shall be governed by and construed in accordance with United States Federal law.

*In witness whereof*, the Parties to this Agreement have caused the Agreement to be duly executed by their respective duly authorized representatives as of the date written above.

Space Flight Participant

Signature: _____

Printed Name: _____

Federal Aviation Administration of the Department of Transportation on Behalf of the United States Government

By: _____

Its: _____

Associate Administrator for Commercial Space Transportation

10. Add part 460 to read as follows:

## PART 460—HUMAN SPACE FLIGHT REQUIREMENTS

### Subpart A—Launch and Reentry With Crew

Sec.
460.1 Scope.
460.3 Applicability.
460.5 Crew qualifications and training.
460.7 Operator training of crew.
460.9 Informing crew of risk.
460.11 Environmental control and life support systems.
460.13 Smoke detection and fire suppression.
460.15 Human factors.
460.17 Verification program.
460.19 Crew waiver of claims against U.S. Government.
460.20–460.40 [Reserved]

### Subpart B—Launch and Reentry With a Space Flight Participant

460.41 Scope.
460.43 Applicability.
460.45 Operator informing space flight participant of risk.
460.47 [Reserved]
460.49 Space flight participant waiver of claims against U.S. Government.
460.51 Space flight participant training.
460.53 Security.

**Authority:** 49 U.S.C. 70105

### § 460.1 Scope.

This subpart establishes requirements for crew of a vehicle whose operator is licensed or permitted under this chapter.

### § 460.3 Applicability.

(a) This subpart applies to:

(1) An applicant for a license or permit under this chapter who proposes to have flight crew on board a vehicle or proposes to employ a remote operator of a vehicle with a human on board.

(2) An operator licensed or permitted under this chapter who has flight crew on board a vehicle or who employs a remote operator of a vehicle with a human on board.

(3) A crew member participating in an activity authorized under this chapter.

(b) Each member of the crew must comply with all requirements of the laws of the United States that apply.

### § 460.5 Crew qualifications and training.

(a) Each crew member must—

(1) Possess and carry an FAA second-class airman medical certificate issued in accordance with 14 CFR part 67 and issued within 12 months prior to launch or reentry;

(2) Complete training on how to carry out his or her role on board or on the ground so that the vehicle will not harm the public; and

(3) Train for his or her role in nominal and non-nominal conditions. The conditions must include—

(i) Abort scenarios; and

(ii) Emergency operations.

(b) Each member of a flight crew must demonstrate an ability to withstand the stresses of space flight, sufficiently to carry out his or her role on board so that the vehicle will not harm the public. The stresses of space flight may include high acceleration or deceleration, microgravity, and vibration.

(c) A pilot and a remote operator must—

(1) Possess and carry an FAA pilot certificate

(i) With an instrument rating; and

(ii) That demonstrates the knowledge of the National Airspace System (NAS) necessary to operate the vehicle.

(2) Possess aeronautical experience and skills necessary to pilot and control the vehicle for any launch or reentry vehicle that will operate in the NAS. Aeronautical experience may include hours in flight, ratings, and training.

(3) Receive vehicle and mission-specific training for each phase of flight by using one or more of the following—

(i) A method or device that simulates the flight;

(ii) An aircraft whose characteristics are similar to the vehicle or any phase of its flight;

(iii) Flight testing; or

(iv) An equivalent method of training as approved by the FAA through the licensing or permitting process.

(4) Train in procedures that direct the vehicle away from the public in the event the flight crew abandons the vehicle during flight; and

(5) Train for each mode of control or propulsion, including any transition between modes, such that the pilot or remote operator is able to control the vehicle.

### § 460.7 Operator training of crew.

(a) *Implementation of training.* An operator must train each member of its crew and define standards for successful completion in accordance with § 460.5.

(b) *Training device fidelity.* An operator must ensure that any crew-training device used to meet the training requirements realistically represents the vehicle's configuration and mission or the operator must inform the crew member being trained of the differences.

(c) *Maintenance of training records.* An operator must continually update the crew training to ensure that it incorporates lessons learned from training and operational missions. An operator must—

(1) Track each revision and update in writing; and

(2) Document the completed training for each crew member and maintain the documentation for each active crew member.

(d) *Current qualifications and training.* An operator must establish a recurrent training schedule and ensure that all crew qualifications and training required by § 460.5 are current before launch or reentry.

### § 460.9 Informing crew of risk.

An operator must inform in writing any individual serving as crew that the United States Government has not certified the launch vehicle as safe for carrying flight crew or space flight participants. An operator must provide this information—

(a) Before entering into any contract or other arrangement to employ that individual; or

(b) For any crew member employed as of December 23, 2004, as early as possible and prior to any launch in which that individual will participate as crew.

### § 460.11 Environmental control and life support systems.

(a) An operator must provide atmospheric conditions adequate to sustain life and consciousness for all inhabited areas within a vehicle. The operator or flight crew must monitor and control the following atmospheric conditions in the inhabited areas—

(1) Composition of the atmosphere, which includes oxygen and carbon dioxide, and any revitalization;

(2) Pressure, temperature and humidity;

(3) Contaminants that include particulates and any harmful or hazardous concentrations of gases, or vapors; and

(4) Ventilation and circulation.

(b) An operator must provide an adequate redundant or secondary oxygen supply for the flight crew.

(c) An operator must

(1) Provide a redundant means of preventing cabin depressurization; or

(2) Prevent incapacitation of any of the flight crew in the event of loss of cabin pressure.

### § 460.13 Smoke detection and fire suppression.

An operator or crew must have the ability to detect smoke and suppress a cabin fire to prevent incapacitation of the flight crew.

### § 460. 15 Human factors.

An operator must take the precautions necessary to account for human factors that can affect a crew's ability to perform safety-critical roles, including in the following safety critical areas—

(a) Design and layout of displays and controls;

(b) Mission planning, which includes analyzing tasks and allocating functions between humans and equipment;

(c) Restraint or stowage of all individuals and objects in a vehicle; and

(d) Vehicle operation, so that the vehicle will be operated in a manner that flight crew can withstand any physical stress factors, such as acceleration, vibration, and noise.

**§ 460.17 Verification program.**

An operator must successfully verify the integrated performance of a vehicle's hardware and any software in an operational flight environment before allowing any space flight participant on board during a flight. Verification must include flight testing.

**§ 460. 19 Crew waiver of claims against U.S. Government.**

Each member of a flight crew and any remote operator must execute a reciprocal waiver of claims with the Federal Aviation Administration of the Department of Transportation in accordance with the requirements of part 440.

**§§ 460. 20–460.40 [Reserved]**

## Subpart B—Launch and reentry with a space flight participant

**§ 460.41 Scope.**

This subpart establishes requirements for space flight participants on board a vehicle whose operator is licensed or permitted under this chapter.

**§ 460.43 Applicability.**

This subpart applies to:

(a) An applicant for a license or permit under this chapter who proposes to have a space flight participant on board a vehicle;

(b) An operator licensed or permitted under this chapter who has a space flight participant on board a vehicle; and

(c) A space flight participant participating in an activity authorized under this chapter.

**§ 460.45 Operator informing space flight participant of risk.**

(a) Before receiving compensation or making an agreement to fly a space flight participant an operator must satisfy the requirements of this section. An operator must inform each space flight participant in writing about the risks of the launch and reentry, including the safety record of the launch or reentry vehicle type. An operator must present this information in a manner that is understandable to the space flight participant and must disclose in writing—

(1) For each mission, the known hazards and risks that could result in a serious injury, death, disability, total or partial loss of physical and mental function; and

(2) That participation in space flight may result in death, serious injury or total or partial loss of physical or mental function.

(b) An operator must inform each space flight participant that the United States Government has not certified the launch vehicle as safe for carrying crew or space flight participants.

(c) An operator must inform each space flight participant of the safety record of all launch or reentry vehicles that have carried one or more persons on board, including both U.S. government and private sector vehicles. This information must include—

(1) The total number of people who have been on a suborbital or orbital space flight and the total number of people who have died or been seriously injured on these flights; and

(2) The total number of launches and reentries conducted with people on board and the number of catastrophic failures of those launches.

(d) An operator must describe the safety record of its vehicle to each space flight participant. The operator's safety record must include—

(1) The number of vehicle flights;

(2) The number of safety-related anomalies or failures that occurred on the ground and in flight on all past launches and reentries of that vehicle; and

(3) Whether any corrective actions were taken to resolve these safety-related anomalies or failures.

(e) An operator must inform a space flight participant that he may request additional information as described in (f) of this section.

(f) If a space flight participant asks, an operator must describe the safety-related anomalies or failures that occurred on the ground and in flight and what corrective actions were taken, if any.

(g) Before flight, each space flight participant must provide informed consent in writing to participate in a launch or reentry. The written informed consent must—

(1) Identify the specific launch vehicle the consent covers;

(2) State that the space flight participant understands the risk, and his or her presence on board the launch vehicle is voluntary;

(3) Be signed and dated by the space flight participant.

**§ 460.47 [Reserved]**

**§ 460.49 Space flight participant waiver of claims against U.S. Government.**

Each space flight participant must execute a reciprocal waiver of claims with the Federal Aviation Administration of the Department of Transportation in accordance with the requirements of part 440.

**§ 460.51 Space flight participant training.**

An operator must train each space flight participant before flight on how to respond to emergency situations, including smoke, fire, loss of cabin pressure, and emergency exit.

**§ 460.53 Security.**

An operator must implement security requirements to prevent any space flight participant from jeopardizing the safety of the flight crew or the public. A space flight participant may not carry on board any explosives, firearms, knives, or other weapons.

Issued in Washington, DC, on December 22, 2005.

**Patricia G. Smith,**

*Associate Administrator for Commercial Space Transportation.*

[FR Doc. 05–24555 Filed 12–23–05; 10:26 am]

BILLING CODE 4910–13–P

Federal Register

Thursday,
December 29, 2005

# Part III

# Department of Housing and Urban Development

## 24 CFR Part 5

## Electronic Submission of Applications for Grants and Other HUD Financial Assistance; Final Rule

**DEPARTMENT OF HOUSING AND URBAN DEVELOPMENT**

**24 CFR Part 5**

**[Docket No. FR–4875–F–02]**

**RIN 2501–AD02**

## Electronic Submission of Applications for Grants and Other HUD Financial Assistance

**AGENCY:** Office of the Secretary, HUD.

**ACTION:** Final rule.

**SUMMARY:** This final rule establishes the requirement for applicants for HUD grants or certain other financial assistance to submit their applications to HUD electronically. This final rule follows publication of a proposed rule on November 23, 2004. HUD received four comments in response to the proposed rule's invitation for public comment. After careful consideration of the comments, this rule makes final without substantive changes the proposed rule published on November 23, 2004.

**DATES:** *Effective Date:* January 30, 2006.

**FOR FURTHER INFORMATION CONTACT:** Barbara Dorf, Director, Office of Departmental Grants Management and Oversight, Department of Housing and Urban Development, 451 Seventh Street, SW., Room 3156, Washington, DC 20410–3000, telephone (202) 708–0667 (this is not a toll-free number). Hearing- or speech-impaired individuals may access this number through TTY by calling the toll-free Federal Information Relay Service at (800) 877–8339.

**SUPPLEMENTARY INFORMATION:**

### I. Background—HUD's November 23, 2004, Proposed Rule

On November 23, 2004, HUD published a proposed rule (69 FR 68218) that would add a new section to 24 CFR part 5 (§ 5.1005). The new section would require applicants for HUD grants or certain other financial assistance to submit their applications to HUD electronically through the federal government grant portal, *Grants.gov,* or its successor Web site. Applications subject to this requirement would include submissions from applicants for HUD grants, cooperative agreements, capital advances, vouchers, and other financial assistance awards, including programs that are classified by the Office of Management and Budget (OMB) as mandatory, as well as formula grant programs that HUD has placed an electronic application on *Grants.gov/Apply* or its successor Web site. HUD refers readers to the preamble of the November 23, 2004, proposed rule for a more detailed discussion of the legal authorities and policy objectives on which the rule is based.

HUD noted in the proposed rule that electronic grant application submission will standardize, simplify, and improve the integrity of HUD's grant-making process. For the applicant, electronic submission of applications will result in saving time and resources in preparing, mailing, and delivering paper copies of applications to HUD Headquarters, field offices, or multiple locations.

The proposed rule concluded that the requirement for electronic submission will apply to all program applications or plan submissions placed by HUD at *www.grants.gov/Apply* for electronic submission through the *Grants.gov* portal. The requirement is consistent with the President's goals for electronic government set forth in the President's Management Agenda for Fiscal Year 2002. The proposed rule also indicated that the requirement was responsive to a 2002 OMB policy directive to federal agencies to use the *Grants.gov* Web site to post opportunities with respect to federal financial assistance programs. Additionally, the rule noted that the requirement for electronic submission will not take effect for individual program applications until HUD makes available the electronic application on the *www.grants.gov/Apply* Web site. Finally, to address the concerns of applicants with limited or no access to the Internet, the proposed rule provided that the HUD Assistant Secretary with authority over the program may waive the electronic submission requirement.

### II. This Final Rule

This final rule follows publication of the November 23, 2004, proposed rule, and takes into consideration the four public comments received on the proposed rule. The four comments received were from four housing authorities. The Department has carefully considered each of the four comments, and its experience in receiving electronic application submissions for competitive programs using *Grants.gov,* and has determined to adopt the proposed regulation without substantive change. In the interest of clarity, the rule now includes language to specify that a waiver of the requirement for electronic submission will be made in writing. The rule substitutes language for the phrase ''or the equivalent HUD official'' to identify more particularly the officials who, in addition to the Assistant Secretary, are authorized to grant waivers. The rule would now allow a waiver to be granted by the Assistant Secretary, the General Deputy Assistant Secretary or the responsible official authorized to perform the duties and responsibilities of the Assistant Secretary or General Deputy Assistant Secretary.

The process for seeking and granting waivers of the requirement to submit an electronic grant application, as provided in this final rule, while similar to HUD's process for waiver of regulations in 24 CFR 5.110, is not the same as the regulatory waiver process. The process for seeking and granting waivers of regulations is governed by section 106 of the Department of Housing and Urban Development Reform Act of 1989 (HUD Reform Act) (42 U.S.C. 3535(a)). Section 106 requires that waivers of a HUD regulation must be in writing and must specify the grounds for approving the waiver, and HUD must notify the public of waivers granted through a **Federal Register** notice, published each calendar quarter, that provides a summary of the waivers granted in the preceding quarter. While this final rule patterns the waiver process for the electronic grant application requirement largely on the regulatory waiver process, it does not provide for quarterly reporting of waivers granted of the electronic grant application submission requirement. HUD is not adopting that feature of the regulatory waiver process because section 103 of the HUD Reform Act prohibits disclosure of the identity of any applicant before the deadline for submission of the application. However, section 102 of the HUD Reform Act, which establishes the elements of HUD's funding competitions, also requires that each application and all related documentation be available for public inspection at the end of the competition process. In accordance with section 102(a)(4)(E) of the HUD Reform Act, and HUD's implementing regulation at 24 CFR 4.5, all applications and related documentation, including an applicant's request for a waiver from the requirement to file its application electronically and HUD's action on such request, will be available for public inspection commencing 30 days after the award of grants is made and these files must remain available for public inspection for a period of at least five years. Therefore, the transparency required by the HUD Reform Act in the granting of regulatory waivers is also present in the granting of waivers of the electronic grant application requirement.

### III. Discussion of Public Comments Received on the November 23, 2004, Proposed Rule

*Comment: The rule will require applicants to have yet another password to satisfy the electronic filing*

*requirement.* The commenter questioned the claimed efficiency of the electronic filing process. The commenter wrote that it would be inefficient and confusing to require housing authorities to use different log-ins and passwords for various HUD programs. The commenter observed that because each housing authority already has a unique ID, there should be no reason for a separate ID for use in each program. The commenter expressed a preference for one password that could be used with all government software programs.

*HUD Response:* HUD acknowledges that the maintenance and use of separate passwords adds to the administrative effort required of housing authorities to participate in the affected programs. However, the *Grants.gov* electronic submission requirement will eliminate that burden. By registering with *Grants.gov* for electronic application submission, an applicant for federal funding, regardless of the agency to which the applicant is applying, will need to use only one password and ID to submit applications for funding posted by all federal agencies through *Grants.gov.* In addition to providing information on funding available from the federal government, *Grants.gov* has posted application packages for funding opportunities in the State of Minnesota and the District of Columbia.

*Comment: The commenter supports the rule with qualifications.* This housing authority voiced support for the rule, but cautioned that, until the system ensures participation of all potential applicants and is bug-free, an alternative system must be available. This commenter recommended staggering the application process over a 12-month period, thus allowing for level user demand. The commenter further recommended that the electronic filing system should permit the uploading of files and not include a ''bumping off'' or ''timing out'' feature. The commenter also wrote that the system should have a process for verifying the receipt of applications and that HUD should provide adequate funding for housing authorities to purchase systems and browsers that are compatible with HUD's system.

*HUD Response:* As indicated in the proposed rule, consistent with the OMB directive, all applicants for HUD grants will be required to submit applications electronically, unless a waiver is granted. Access to *Grants.gov* requires only a computer with an Internet browser. In addition, the *Grants.gov* site does not require applicants to work on-line. Applicants download their application packages, work off-line, and then upload the application and submit their applications via *Grants.gov.* This eliminates the time-out issues of concern to the commenter, as HUD is aware that development of an application for funding can take time. *Grants.gov* provides the applicant with a receipt and tracking number through the application submission process. Applicants receive notification when the application has been successfully submitted, received by *Grants.gov*, and validated by *Grants.gov.* HUD does not believe that staggering the application due dates, as recommended by the commenter, is necessary. HUD will provide *Grants.gov* with an estimated utilization rate so that adequate server and storage capacity is available at all times, especially anticipated application filing dates. Based upon HUD and other federal agency utilization in FY2005, *Grants.gov* has made a number of system upgrades, including increasing the number of servers, and installing a Secure Socket Layer (SSL) Accelerator and high capacity Storage Area Network (SAN) device to better handle traffic and increased storage volumes. In addition, the *Grants.gov* site has been segmented across various servers to ensure adequate capacity is available for submissions, downloads, and status checking. *Grants.gov* has also instituted several ways to track site utilization, patterns, and volumes on an hourly basis to provide early alert to increased needs. Therefore, HUD believes that the system is sized to accommodate a high volume of application submissions from a variety of federal and other agencies on a given date.

*Comment: Application forms are not user-friendly and cannot be saved.* The commenter wrote that her extensive experience in completing and being awarded various HUD grants would be jeopardized because she does not believe the system is ready for implementation.

*HUD Response:* Based on user surveys, *Grants.gov* has found that users of *Grants.gov* have found the Web site easy to use and navigate. A number of features facilitate the use of *Grants.gov.* At the present time, the *Grants.gov* application features some electronic forms developed in eXtensible Mark-Up Language (XML) using PureEdge™ software. The forms are designed to be user-friendly and incorporate embedded help tips to help applicants meet submission requirements. HUD has been working with *Grants.gov* to increase the number of HUD application forms available with this technology. Until all forms are created in XML, HUD will continue to make all forms, including those currently available in XML, available in Adobe™ Portable Document Format (PDF). Application forms in PDF, in addition to those in Microsoft Word™ or Microsoft Excel™ format, can be saved and uploaded as part of an application submission to *Grants.gov.* HUD has provided users several ways to submit electronic files as part of their electronic application submission. In FY2005, the majority of HUD applicants found the PureEdge forms easy to use, save, and submit.

*Comment: This housing authority applauds HUD's effort to centralize and streamline the application process.* The commenter, however, urged HUD to establish an alternative plan and to put precautions in place to ensure that the system is not overwhelmed, thereby reducing its efficiency. The commenter further recommended that there should be separate submission paths for agencies previously screened by HUD. The commenter also requested more guidance on using the Central Contractor Registration (CCR) and *Grants.gov.*

*HUD Response:* As noted herein, *Grants.gov* is designed to provide for large numbers of users with large application submissions. The federal agencies are working with *Grants.gov* to ensure that the *Grants.gov* server capability can handle the number and size of applications expected for each application period. Given *Grants.gov's* record of accomplishment to date of having received over 15,000 applications electronically, HUD believes that the system will function as designed. In addition, the system upgrades described in this notice will prevent the system from being overwhelmed by the number of users or the number of separate applications posted by the federal agencies. The purpose of *Grants.gov* is to provide one portal, with similar requirements and consistent format for all users of federal financial assistance programs.

With regard to the other concerns raised by the commenter, HUD believes that adequate information is currently available on-line and through the *Grants.gov* Web site and its support help desk to assist applicants through the registration process. Applicants can go to *www.Grants.gov/GetStarted* and follow the step-by-step instructions on how to find and apply for funding opportunities, including instructions on how to obtain a DUNS number, register with the CCR, and register with an E-Authentication provider. *Grants.gov* Support offers customers assistance by calling 800–518–GRANTS or by sending an email to *Support@Grants.gov.* In addition, HUD has placed informational brochures and checklists on HUD's

Internet Grants page at *http://www.hud.gov/grants/index.cfm*, issued a notice in the **Federal Register** on December 9, 2005 (70 FR 273332), and published a brochure describing the steps in the registration process to assist applicants through the five-step registration process.

## IV. Findings and Certifications

*Unfunded Mandates Reform Act*

Title II of the Unfunded Mandates Reform Act of 1995 (2 U.S.C. 1531–1538) establishes requirements for federal agencies to assess the effects of their regulatory actions on state, local, and tribal governments, and the private sector. This final rule does not impose any federal mandate on any state, local, or tribal government, or the private sector within the meaning of the Unfunded Mandates Reform Act of 1995.

*Executive Order 13132, Federalism*

Executive Order 13132 (entitled ''Federalism'') prohibits an agency from publishing any rule that has federalism implications, if the rule imposes either substantial direct compliance costs on state and local governments and is not required by statute, or the rule preempts state law, unless the agency meets the consultation and funding requirements of Section 6 of the order. This final rule does not have federalism implications and does not impose substantial direct compliance costs on state and local governments or preempt state law within the meaning of the order.

*Impact on Small Entities*

The Secretary, in accordance with the Regulatory Flexibility Act (5 U.S.C. 605(b)), has reviewed and approved this final rule and in so doing, certifies that this rule will not have a significant economic impact on a substantial number of small entities. Providing for electronic submission of grant applications will simplify and lessen the burden on applicants' resources because they will no longer need to duplicate and submit paper applications.

*Environmental Impact*

In accordance with 24 CFR 50.19(c)(1), this final rule does not direct, provide for assistance or loan and mortgage insurance for, or otherwise govern or regulate, real property acquisition, disposition, leasing, rehabilitation, alteration, demolition, or new construction, or establish, revise, or provide for standards for construction or construction materials, manufactured housing, or occupancy. Therefore, this final rule is categorically excluded from the requirements of the National Environmental Policy Act (42 U.S.C. 4321 *et seq.*).

## List of Subjects in 24 CFR Part 5

Administrative practice and procedure, Aged, Claims, Crime, Government contracts, Grant programs—housing and community development, Individuals with disabilities, Intergovernmental relations, Loan programs—housing and community development, Low and moderate-income housing, Mortgage insurance, Penalties, Pets, Public housing, Rent subsidies, Reporting and recordkeeping requirements, Social security, Unemployment.

■ Accordingly, for the reasons described in the preamble, HUD amends 24 CFR part 5 as follows:

## PART 5—GENERAL HUD PROGRAM REQUIREMENTS; WAIVERS

■ 1. The authority citation for 24 CFR part 5 continues to read as follows:

**Authority:** 42 U.S.C. 3535(d).

■ 2. Add § 5.1005 to Subpart K to read as follows:

### § 5.1005 Electronic submission of applications for grants and other financial assistance.

Applicants described under 24 CFR 5.1001 are required to submit electronic applications or plans for grants and other financial assistance in response to any application that HUD has placed on the *www.grants.gov/Apply* Web site or its successor. The HUD Assistant Secretary, General Deputy Assistant Secretary or, the individual authorized to perform duties and responsibilities of these positions, with authority over the specific program for which the waiver is sought, may in writing, waive the electronic submission requirement for an applicant on the basis of good cause.

Dated: December 21, 2005.

**Roy A. Bernardi,**

*Deputy Secretary.*

[FR Doc. 05–24576 Filed 12–28–05; 8:45 am]

BILLING CODE 4210–32–P

Federal Register

Thursday,
December 29, 2005

# Part IV

# Department of Labor

## Office of the Secretary

## Delegation of Authority Under the Federal Tort Claims Act and Related Statutes; Notice

## DEPARTMENT OF LABOR

### Office of the Secretary

**[Secretary's Order 07–2005]**

### Delegation of Authority Under the Federal Tort Claims Act and Related Statutes

1. *Purpose.* To delegate to the Solicitor of Labor the authority conferred on the Secretary of Labor under (a) the Federal Tort Claims Act, (b) section 157(b) of the Workforce Investment Act of 1998, and (c) the Military Personnel and Civilian Employees' Claims Act of 1964.

2. *Directives Affected.* Secretary's Order 24–76 is hereby cancelled.

3. *Background.*

A. The Federal Tort Claims Act (FTCA), 28 U.S.C. 2672, generally makes the Government liable for property damage and personal injuries caused by the negligent or wrongful act or omission of any Government employee while performing official duties. Federal agency heads, including the Secretary of Labor, are authorized by the FTCA to award, compromise, or settle claims not in excess of $25,000. Subject to the provisions of the FTCA relating to civil actions or tort claims, any such award or determination is final and conclusive on all officers of the Government, except when procured by means of fraud.

B. Section 157(b) of the Workforce Investment Act of 1998, 29 U.S.C. 2897(b), grants the Secretary of Labor discretionary authority to settle claims for personal injury or property damage which arise out of the operation of the Job Corps but are not cognizable under the Federal Tort Claims Act. The maximum payable for each claim may not exceed $1,500.

C. The Military Personnel and Civilian Employees' Claims Act of 1964, 31 U.S.C. 3721, authorizes the head of an executive agency, such as the Secretary of Labor, to settle and pay claims made by an officer or employee of that agency for damage to, or loss of, personal property incident to Government service. The maximum amount allowable on any claim is $40,000 unless the claim arose from an emergency evacuation or from extraordinary circumstances. For claims arising from an emergency evacuation or from extraordinary circumstances, the maximum allowable is $100,000.

4. *Delegation of Authority.* The Solicitor of Labor is hereby authorized to exercise, execute, and perform all powers, authority, and functions conferred on the Secretary of Labor under the statutes referred to above, including the preparation and promulgation of regulations governing the processing of claims filed under such statutes.

5. *Redelegation of Authority.* The authority and responsibility herein delegated to the Solicitor of Labor may be redelegated. See generally 29 CFR Part 15.

6. *Reservation of Authority.* The following functions are reserved to the Secretary:

A. No delegation of authority or assignment of responsibility under this Order will be deemed to affect the Secretary's authority to continue to exercise or further delegate such authority or responsibility.

B. The submission of reports and recommendations to the President and Congress concerning the administration of the statutory provisions and executive orders listed above is reserved to the Secretary.

7. *Effective Date.* This Order will be effective when signed.

Dated: December 19, 2005.

**Elaine L. Chao,**

*Secretary of Labor.*

[FR Doc. 05–24590 Filed 12–28–05; 8:45 am]

BILLING CODE 4510–23–P

# Reader Aids

**Federal Register**

Vol. 70, No. 249

Thursday, December 29, 2005

## CUSTOMER SERVICE AND INFORMATION

| | |
|---|---|
| **Federal Register/Code of Federal Regulations** | |
| General Information, indexes and other finding aids | **202–741–6000** |
| **Laws** | **741–6000** |
| **Presidential Documents** | |
| Executive orders and proclamations | **741–6000** |
| **The United States Government Manual** | **741–6000** |
| **Other Services** | |
| Electronic and on-line services (voice) | **741–6020** |
| Privacy Act Compilation | **741–6064** |
| Public Laws Update Service (numbers, dates, etc.) | **741–6043** |
| TTY for the deaf-and-hard-of-hearing | **741–6086** |

## ELECTRONIC RESEARCH

### World Wide Web

Full text of the daily Federal Register, CFR and other publications is located at: **http://www.gpoaccess.gov/nara/index.html**

Federal Register information and research tools, including Public Inspection List, indexes, and links to GPO Access are located at: **http://www.archives.gov/federal_register/**

### E-mail

**FEDREGTOC-L** (Federal Register Table of Contents LISTSERV) is an open e-mail service that provides subscribers with a digital form of the Federal Register Table of Contents. The digital form of the Federal Register Table of Contents includes HTML and PDF links to the full text of each document.

To join or leave, go to **http://listserv.access.gpo.gov** and select *Online mailing list archives, FEDREGTOC-L, Join or leave the list (or change settings);* then follow the instructions.

**PENS** (Public Law Electronic Notification Service) is an e-mail service that notifies subscribers of recently enacted laws.

To subscribe, go to **http://listserv.gsa.gov/archives/publaws-l.html** and select *Join or leave the list (or change settings);* then follow the instructions.

**FEDREGTOC-L** and **PENS** are mailing lists only. We cannot respond to specific inquiries.

**Reference questions.** Send questions and comments about the Federal Register system to: **fedreg.info@nara.gov**

The Federal Register staff cannot interpret specific documents or regulations.

## FEDERAL REGISTER PAGES AND DATE, DECEMBER

72065–72194 ..... 1
72195–72348 ..... 2
72349–72576 ..... 5
72577–72698 ..... 6
72699–72880 ..... 7
72881–73122 ..... 8
73123–73346 ..... 9
73347–73552 .....12
73553–73904 .....13
73905–74192 .....14
74193–74638 .....15
74639–74994 .....16
74995–75378 .....19
75379–75710 .....20
75711–75928 .....21
75929–76128 .....22
76129–76376 .....23
76377–76670 .....27
76671–76970 .....28
76971–77296 .....29

## CFR PARTS AFFECTED DURING DECEMBER

At the end of each month, the Office of the Federal Register publishes separately a List of CFR Sections Affected (LSA), which lists parts and sections affected by documents published since the revision date of each title.

**3 CFR**

**Proclamations:**
7967 .....72575
7968 .....73903
7969 .....75711
7970 .....76647
7971 .....76651
7972 .....76969

**Executive Orders:**
13000 (Revoked by EO 13394) .....76665
13368 (Superseded by EO 13393) .....76655
13392 .....75373
13393 .....76655
13394 (See Memo of 12/22/05—for the Secretary of Transportation) .....76665

**Administrative Orders:**
Memorandums:
Memorandum of June 2, 2005 (Revoked by EO 13394) .....76665
Memorandum of December 20, 2005 .....76374
Memorandum of December 22, 2005 (for the Secretary of Defense) .....76667
Memorandum of December 22, 2005 (for the Secretary of Transportation) (See EO 13394) .....76669
Presidential Determinations:
No. 2006–5 of December 14, 2005 .....75929

**5 CFR**

300 .....72065
307 .....72065
315 .....72065
316 .....72065
330 .....72065
335 .....72065
451 .....74995
531 .....74995, 74996
550 .....72065
551 .....72065
575 .....74995
720 .....72065

**Proposed Rules:**
337 .....73646, 75745
930 .....73646, 75745
1216 .....74714

**7 CFR**

51 .....76671
170 .....76129
210 .....72349
220 .....72349
226 .....72349
272 .....72350
274 .....72350
276 .....72350
278 .....72350
279 .....72350
280 .....72350
301 .....73553
305 .....72881
319 .....72068, 72881, 76133
800 .....73556
906 .....73123
931 .....76377
979 .....72699
984 .....72195, 72892
985 .....72355
993 .....76971
1030 .....73126
1902 .....73347

**Proposed Rules:**
319 .....74215, 75967, 77069
330 .....74215
340 .....74215
927 .....73167
948 .....75981
979 .....75984
1005 .....76718
1007 .....76718
1124 .....74166
1131 .....74166
1207 .....73945
1209 .....73945
1220 .....72257
1496 .....74717

**9 CFR**

94 .....73905

**10 CFR**

**Proposed Rules:**
1 .....74950
2 .....74950
13 .....74950
31 .....75423
34 .....76724
35 .....75752
50 .....75085
110 .....74950

**11 CFR**

100 .....75713
106 .....75379
111 .....75717
300 .....75379

**Proposed Rules:**
109 .....73946

**12 CFR**

41 .....75931
201 .....75385

203 ....75718
222 ....75931
229 ....73128, 74998
232 ....75931
334 ....75931
510 ....76674
546 ....76674
559 ....76674
560 ....76674
561 ....76674
567 ....76674
571 ....75931
707 ....72895
717 ....75931
723 ....75719
741 ....75723
796 ....72702
1805 ....73887

**Proposed Rules:**

Ch. III ....73652
Ch. VII ....75986
701 ....75753
741 ....75753
951 ....76938

**13 CFR**

106 ....75932
121 ....72577
123 ....72577
300 ....74193
301 ....74193, 74196
304 ....74193, 74196
308 ....74195

**14 CFR**

23 ....72068, 72070, 75000
25 ....73559, 73561, 75002, 76676
39 ....72358, 72361, 72363, 72366, 72368, 72595, 72902, 73347, 73351, 73355, 73358, 73361, 73364, 73576, 73577, 73579, 73581, 73583, 73919, 73921, 73923, 73925, 73930, 73933, 73935, 74639, 74641, 74645, 74647, 75004, 75386, 75388, 75390, 75725, 75727, 75932, 75933, 76378, 76381, 76385, 76676, 76679, 76681, 76973
71 ....72371, 72905, 73129, 73131, 73132, 73134, 74197, 75392, 75393, 75394, 75395, 76140, 76684
73 ....76148
97 ....72703, 72705, 73367, 73785, 76392, 76394
121 ....75396, 76974
125 ....76974
135 ....76974
145 ....75396, 76974

**Proposed Rules:**

13 ....72403
25 ....76728
39 ....72083, 72085, 72088, 72327, 72406, 72409, 72599, 72601, 72726, 72938, 72939, 72942, 72945, 72947, 73171, 73173, 73391, 73392, 73633, 73665, 73668, 73671, 74235, 74237, 75426, 75428, 75430, 75435, 76431, 77073, 77075
47 ....72403
61 ....72403
71 ....72949, 72950, 73959, 75438, 76729, 76730
91 ....72403
93 ....73674
183 ....72403
399 ....73960
401 ....77262
415 ....77262
431 ....77262
435 ....77262
440 ....77262
450 ....77262
460 ....77262

**15 CFR**

4 ....75729
748 ....72073

**16 CFR**

303 ....73369
801 ....73369
803 ....73369

**Proposed Rules:**

Ch. 1 ....77077

**17 CFR**

30 ....75934
200 ....72566
201 ....72566
210 ....76626
229 ....72372, 76626
231 ....73344
239 ....72372
240 ....76626
241 ....73344
249 ....76626
271 ....73344
420 ....73378

**Proposed Rules:**

4 ....74240
15 ....74246
16 ....74246
17 ....74246
18 ....74246
19 ....74246
21 ....74248
240 ....74598, 76116
249 ....74598
274 ....74598

**18 CFR**

35 ....75005
365 ....75592
366 ....75592

**Proposed Rules:**

41 ....72730
158 ....72730
284 ....72090, 77079
286 ....72730
349 ....72730

**19 CFR**

360 ....72373

**20 CFR**

422 ....74649
423 ....73135
655 ....72556
1002 ....75246, 75313

**Proposed Rules:**

260 ....73175
320 ....73175
341 ....73176
404 ....72411, 72416
416 ....72411, 72416

**21 CFR**

Ch. I ....72074
101 ....76150, 76684
172 ....72906
510 ....74652, 75398
520 ....73136, 75016, 75017, 75398, 76163, 76396
524 ....73137
556 ....76163
558 ....74652, 75017
610 ....72197, 75018
1300 ....74653
1308 ....74653

**Proposed Rules:**

20 ....76732
310 ....73178, 75988
341 ....75988
357 ....75988
358 ....73178
510 ....76732
514 ....76732
516 ....76732
610 ....72257

**24 CFR**

5 ....77292
203 ....72696
570 ....76362
941 ....72908

**Proposed Rules:**

3282 ....73966

**26 CFR**

1 ....72376, 72908, 72914, 75028, 75730, 76685
31 ....74198
32 ....74198
301 ....74658
602 ....72908, 72914

**Proposed Rules:**

1 ....72260, 72952, 73393, 73967, 74259, 75090, 75759, 75762, 76433, 76502, 76732
54 ....72953, 75998
301 ....72954, 73393, 74259

**27 CFR**

9 ....72707, 72710, 72713, 72717

**Proposed Rules:**

4 ....72731
5 ....72731
7 ....72731
9 ....72733

**28 CFR**

0 ....76163
1617 ....72199
905 ....73587
906 ....74200

**29 CFR**

1404 ....76396
1926 ....76979
1928 ....76979
4011 ....72074
4022 ....72074, 74200
4044 ....72076, 72205, 73330, 74200

**Proposed Rules:**

1611 ....73413

**30 CFR**

204 ....72381
250 ....74659

**31 CFR**

**Proposed Rules:**

1 ....72739

**32 CFR**

285 ....73378
346 ....72917

**Proposed Rules:**

153 ....75998
235 ....75091
635 ....73181

**33 CFR**

Ch. I ....75731
104 ....74663
105 ....74663
117 ....73380, 73937, 75937, 75939, 76689
151 ....74669
153 ....74669
160 ....74663
165 ....74202, 74676, 75036, 76692

**Proposed Rules:**

100 ....72964
117 ....72419, 72967, 75765, 75767
155 ....74259
157 ....74259
401 ....75769

**34 CFR**

226 ....75908

**Proposed Rules:**

200 ....74624
300 ....74624

**36 CFR**

242 ....76400
1011 ....73587

**Proposed Rules:**

7 ....77089
242 ....76010

**37 CFR**

253 ....72077

**38 CFR**

3 ....72211
4 ....75398
9 ....75940
20 ....72211

**Proposed Rules:**

3 ....76221
4 ....76221
14 ....76221

**39 CFR**

111 ....72221, 75734
232 ....72078

**Proposed Rules:**

111 ....76434

**40 CFR**

52 ....72597, 72720, 73380, 75399, 76165, 76408, 76694, 77026
60 ....73138, 74679, 74870
61 ....73138, 73595
63 ....73138, 73595, 75042, 75047, 75320, 75884, 76918
70 ....75320, 75399
71 ....75320
80 ....74552, 75914
81 ....76165, 77026
82 ....73604, 77042, 77048
86 ....72917, 75403
180 ....74679, 74688, 75734, 76697, 76700

261 ....76168
420 ....73618
710 ....74696, 75059
**Proposed Rules:**
51 ....72268, 75439, 77101
52 ....72740, 72741, 72744, 73414, 74259, 75093, 75440, 76435, 76733, 76734, 77113
55 ....72094
60 ....75348
61 ....73183, 73675
63 ....72330, 73098, 73183, 73675, 75096, 75924, 77116
70 ....75440
80 ....74582
81 ....73183
86 ....72970
96 ....72268, 77101
112 ....73518, 73524
122 ....73676, 75771, 76013
123 ....76013
180 ....72757, 76224
272 ....75098
412 ....75771

**41 CFR**

60-250 ....72148
**Proposed Rules:**
51-2 ....74721
51-3 ....74721
51-4 ....74721

**42 CFR**

50 ....76174
83 ....75949
405 ....73623
418 ....76175
419 ....76176
422 ....76196
423 ....76198
484 ....76199
485 ....76176
**Proposed Rules:**
51a ....76435
1001 ....73186

**43 CFR**

3160 ....75954

**44 CFR**

64 ....72078, 74204
65 ....73634
**Proposed Rules:**
67 ....73677

**45 CFR**

**Proposed Rules:**
1180 ....73967

**46 CFR**

Ch. I ....75731
4 ....74669, 75954

**47 CFR**

1 ....76411
15 ....75739
22 ....76411, 76414, 76704
64 ....75070, 76208, 76712, 77052
73 ....72723, 73939, 73940, 73941, 73942, 75744
76 ....76504
90 ....76704
101 ....77054
**Proposed Rules:**
64 ....75102
73 ....72763, 73972
76 ....73973

**48 CFR**

1 ....73415
2 ....73415
4 ....73415
5 ....73415
6 ....73415
7 ....73415
8 ....73415
9 ....73415
12 ....73415, 76417
13 ....73415
15 ....73415
16 ....73415
17 ....73415
19 ....73415
22 ....73415
25 ....73415
28 ....73415
30 ....73415
32 ....73415
36 ....73415
42 ....73415
48 ....73415
49 ....73415
50 ....73415
52 ....73415
53 ....73415
Ch. 2 ....75411
201 ....75411
205 ....73148
211 ....73150
213 ....75411
216 ....73151
217 ....73151
223 ....73150
225 ....73152, 73153
226 ....73148
232 ....75412
252 ....73148, 73150, 73152, 73153
1852 ....74206
9901 ....73423
9903 ....73423
**Proposed Rules:**
Ch. 2 ....73187
208 ....73187
215 ....75440
225 ....73189
230 ....75440
252 ....73187, 73189, 75440
253 ....73187, 75440

**49 CFR**

105 ....73156
106 ....73156
107 ....73156
110 ....73156
171 ....73156
172 ....73156
173 ....72930, 73156
174 ....73156
175 ....73156
176 ....73156
177 ....73156
178 ....73156
180 ....73156
225 ....75414
234 ....72382
236 ....72382
571 ....73383, 75961
1540 ....72930
**Proposed Rules:**
Ch. I ....76228
192 ....74262, 74265
195 ....74265
229 ....73070
238 ....73070
571 ....74270

**50 CFR**

17 ....73820, 74112, 74138, 75071
23 ....74700
100 ....76400
222 ....77054
223 ....77054
300 ....73943
622 ....73383, 76216, 77057
635 ....72080, 72724, 74712
648 ....72082, 72934, 75074, 75418, 75965, 76422, 76430, 76713, 76714, 76715, 77060
660 ....72385, 75075
679 ....73389, 74208, 75080, 75419, 77067
680 ....75419
**Proposed Rules:**
17 ....72776, 72973, 73190, 73699, 74284, 74426, 75546, 76018
100 ....76010
216 ....73426
223 ....72099
600 ....76436
635 ....73980, 76441
648 ....72100, 74285, 75111, 75114, 76436
660 ....72777, 75115
679 ....74723, 74739
697 ....73717

## REMINDERS

The items in this list were editorially compiled as an aid to Federal Register users. Inclusion or exclusion from this list has no legal significance.

## RULES GOING INTO EFFECT DECEMBER 29, 2005

**AGRICULTURE DEPARTMENT**

**Food and Nutrition Service**

Child nutrition programs:
- Women, infants, and children; special supplement nutrition program—
  - Vendor cost containment; published 11-29-05

**COMMERCE DEPARTMENT**

**National Oceanic and Atmospheric Administration**

Fishery conservation and management:
- Alaska; fisheries of Exclusive Economic Zone—
  - Bering Sea and Aleutian Islands groundfish; published 12-29-05

**ENVIRONMENTAL PROTECTION AGENCY**

Air quality implementation plans; approval and promulgation; various States; air quality planning purposes; designation of areas:
- Indiana; published 11-14-05

Toxic substances:
- Significant new uses—
  - 2-ethoxyethanol, etc.; published 11-29-05

**TRANSPORTATION DEPARTMENT**

**Federal Aviation Administration**

Airworthiness directives:
- Airbus; published 12-14-05
- Pacific Aerospace Corp. Ltd.; published 11-29-05

## COMMENTS DUE NEXT WEEK

**AGRICULTURE DEPARTMENT**

**Agricultural Marketing Service**

Potatoes (Irish) grown in—
- Colorado; comments due by 1-6-06; published 12-22-05 [FR E5-07677]

**COMMERCE DEPARTMENT**

**National Oceanic and Atmospheric Administration**

Endangered and threatened species:
- Critical habitat designations—
  - Northern right whale; Pacific Ocean; comments due by 1-3-06; published 11-2-05 [FR 05-21861]

Fishery conservation and management:
- Northeastern United States fisheries—
  - Atlantic bluefish; comments due by 1-3-06; published 12-19-05 [FR 05-24208]
- West Coast States and Western Pacific fisheries—
  - Pacific Coast groundfish; comments due by 1-4-06; published 12-5-05 [FR 05-23640]

**DEFENSE DEPARTMENT**

**Army Department**

Personnel:
- Decorations, medals, ribbons, and similiar devices; comments due by 1-3-06; published 11-2-05 [FR 05-21519]

**DEFENSE DEPARTMENT**

**Defense Contract Audit Agency**

Privacy Act; implementation; comments due by 1-3-06; published 11-2-05 [FR 05-21783]

**ENERGY DEPARTMENT**

**Federal Energy Regulatory Commission**

Natural gas companies (Natural Gas Act):
- Codes of conduct amendments; Unbundled sales service and blanket marketing certificates; comments due by 1-3-06; published 12-1-05 [FR 05-23405]

**ENVIRONMENTAL PROTECTION AGENCY**

Air programs:
- Outer Continental Shelf regulations—
  - California; consistency update; comments due by 1-3-06; published 12-1-05 [FR 05-23275]

Air quality implementation plans; approval and promulgation; various States:
- Colorado; comments due by 1-6-06; published 12-7-05 [FR 05-23712]
- Texas; comments due by 1-6-06; published 12-7-05 [FR 05-23718]

Water pollution; effluent guidelines for point source categories:
- Meat and poultry products processing facilities; Open for comments until further notice; published 9-8-04 [FR 04-12017]

**FEDERAL COMMUNICATIONS COMMISSION**

Radio stations; table of assignments:
- Nebraska and Kansas; comments due by 1-3-06; published 11-23-05 [FR 05-23186]
- Texas; comments due by 1-3-06; published 11-23-05 [FR 05-23183]

**HEALTH AND HUMAN SERVICES DEPARTMENT**

**Centers for Medicare & Medicaid Services**

Medicare:
- Outpatient drugs and biologicals; competitive acquisition under Part B; comments due by 1-3-06; published 11-21-05 [FR 05-22175]
- Physician fee schedule (CY 2006); payment policies and realtive value units; comments due by 1-3-06; published 11-21-05 [FR 05-22160]

**INTERIOR DEPARTMENT**

**Fish and Wildlife Service**

Endangered and threatened species:
- Critical habitat designations—
  - Fender's blue butterfly and Willamette daisy; comments due by 1-3-06; published 11-2-05 [FR 05-21333]

**INTERIOR DEPARTMENT**

**Minerals Management Service**

Outer Continental Shelf; oil, gas, and sulphur operations:
- Marine mammals and threatened and endangered species protection; lessee plans and information submission requirements; comment period extension; comments due by 1-6-06; published 10-25-05 [FR 05-21282]

**JUSTICE DEPARTMENT**

**Prisons Bureau**

Inmate control, custody, care, etc.:
- Classification and program review; comments due by 1-3-06; published 11-3-05 [FR 05-21967]

Organization, functions, and authority delegations:
- Central Office et al.; addresses removed from rules; comments due by 1-3-06; published 11-4-05 [FR 05-21966]

**SMALL BUSINESS ADMINISTRATION**

Loan programs:
- Business loans and development company loans; liquidation and litigation procedures; comments due by 1-3-06; published 11-3-05 [FR 05-21681]

Small business size standards:
- Inflation adjustment; comments due by 1-5-06; published 12-6-05 [FR 05-23435]

**SOCIAL SECURITY ADMINISTRATION**

Social security benefits and supplemental security income:
- Federal old-age, survivors, and disability benefits, and aged, blind, and disabled—
  - Disability evaluation; age categories definitions; comments due by 1-3-06; published 11-4-05 [FR 05-21975]

**TRANSPORTATION DEPARTMENT**

Air carrier control:
- Fitness review policies; comments due by 1-6-06; published 11-7-05 [FR 05-22056]

**TRANSPORTATION DEPARTMENT**

**Federal Aviation Administration**

Airworthiness directives:
- Airbus; comments due by 1-3-06; published 12-1-05 [FR 05-23514]
- BAE Systems (Operations) Ltd.; comments due by 1-3-06; published 12-8-05 [FR 05-23776]
- Boeing; Open for comments until further notice; published 8-16-04 [FR 04-18641]
- Empresa Brasileira de Aeronautica S.A. (EMBRAER); comments due by 1-6-06; published 12-7-05 [FR 05-23702]
- General Electric Co.; comments due by 1-3-06; published 11-2-05 [FR 05-21805]
- Honeywell; comments due by 1-3-06; published 11-2-05 [FR 05-21802]
- Pratt & Whitney; comments due by 1-3-06; published 11-2-05 [FR 05-21804]
- Short Brothers; comments due by 1-4-06; published 12-5-05 [FR 05-23600]

Turbomeca S.A.; comments due by 1-3-06; published 11-4-05 [FR 05-22007]

Airworthiness standards:

Special conditions—

Cessna Aircraft Co. Model 510 Mustang airplanes; comments due by 1-3-06; published 12-1-05 [FR 05-23523]

New Piper Aircraft, Inc.; PA-34 model airplanes; comments due by 1-3-06; published 12-1-05 [FR 05-23524]

Class B airspace; comments due by 1-6-06; published 11-22-05 [FR 05-23096]

Class E airspace; comments due by 1-3-06; published 11-17-05 [FR 05-22775]

**TRANSPORTATION DEPARTMENT**

**Pipeline and Hazardous Materials Safety Administration**

Pipeline safety:

Gas gathering line definition; alternative definition for onshore lines; comments due by 1-3-06; published 10-3-05 [FR 05-19455]

**TREASURY DEPARTMENT**

**Fiscal Service**

Financial Management Service:

Automated Clearing House; Federal agency participation; comments due by 1-6-06; published 11-7-05 [FR 05-22064]

**TREASURY DEPARTMENT**

**Internal Revenue Service**

Income taxes:

Deferred compensation plans; application of section 409A; comments due by 1-3-06; published 10-4-05 [FR 05-19379]

Income attributable to domestic production activities; public hearing; comments due by 1-3-06; published 11-4-05 [FR 05-21484]

**TREASURY DEPARTMENT**

Privacy Act; implementation; comments due by 1-6-06; published 12-7-05 [FR E5-07001]

## LIST OF PUBLIC LAWS

This is a continuing list of public bills from the current session of Congress which have become Federal laws. It may be used in conjunction with "PLUS" (Public Laws Update Service) on 202–741–6043. This list is also available online at *http://www.archives.gov/federal-register/laws.html*.

The text of laws is not published in the **Federal Register** but may be ordered in "slip law" (individual pamphlet) form from the Superintendent of Documents, U.S. Government Printing Office, Washington, DC 20402 (phone, 202–512–1808). The text will also be made available on the Internet from GPO Access at *http://www.gpoaccess.gov/plaws/index.html*. Some laws may not yet be available.

**H.R. 797/P.L. 109–136**
Native American Housing Enhancement Act of 2005 (Dec. 22, 2005; 119 Stat. 2643)

**H.R. 3963/P.L. 109–137**
To amend the Federal Water Pollution Control Act to extend the authorization of appropriations for Long Island Sound. (Dec. 22, 2005; 119 Stat. 2646)

**H.R. 4195/P.L. 109–138**
Southern Oregon Bureau of Reclamation Repayment Act of 2005 (Dec. 22, 2005; 119 Stat. 2647)

**H.R. 4324/P.L. 109–139**
Predisaster Mitigation Program Reauthorization Act of 2005 (Dec. 22, 2005; 119 Stat. 2649)

**H.R. 4436/P.L. 109–140**
To provide certain authorities for the Department of State, and for other purposes. (Dec. 22, 2005; 119 Stat. 2650)

**H.R. 4508/P.L. 109–141**
Coast Guard Hurricane Relief Act of 2005 (Dec. 22, 2005; 119 Stat. 2654)

**H.J. Res. 38/P.L. 109–142**
Recognizing Commodore John Barry as the first flag officer of the United States Navy. (Dec. 22, 2005; 119 Stat. 2657)

**S. 335/P.L. 109–143**
To reauthorize the Congressional Award Act. (Dec. 22, 2005; 119 Stat. 2659)

**S. 467/P.L. 109–144**
Terrorism Risk Insurance Extension Act of 2005 (Dec. 22, 2005; 119 Stat. 2660)

**S. 1047/P.L. 109–145**

Presidential $1 Coin Act of 2005 (Dec. 22, 2005; 119 Stat. 2664)

**H.R. 358/P.L. 109–146**

Little Rock Central High School Desegregation 50th Anniversary Commemorative Coin Act (Dec. 22, 2005; 119 Stat. 2676)

**H.R. 327/P.L. 109–147**

To allow binding arbitration clauses to be included in all contracts affecting land within the Gila River Indian Community Reservation. (Dec. 22, 2005; 119 Stat. 2679)

**Last List December 23, 2005**

## Public Laws Electronic Notification Service (PENS)

**PENS** is a free electronic mail notification service of newly enacted public laws. To subscribe, go to *http://listserv.gsa.gov/archives/publaws-l.html*

**Note:** This service is strictly for E-mail notification of new laws. The text of laws is not available through this service. **PENS** cannot respond to specific inquiries sent to this address.